RHODE ISLAND PUBLIC TRANSIT AUTHORITY
705 Elmwood Avenue
Providence, RI 02907

GENERAL GUIDELINES FOR COMPLETING REQUEST FOR PROPOSALS PACKAGE

This document is intended as a guideline to assist prospective proposers in successfully completing the necessary Proposal paperwork. You are strongly encouraged to read the Instructions for Proposers Sections very carefully. This document is NOT intended to replace the more-detailed instructions that are included in the attached Proposal Package.

- It is **EXTREMELY IMPORTANT** that all required forms be filled out completely. Federal and State Regulations mandate that these forms be filled out properly. Failure to fill out these forms may result in your Proposal being ruled non-responsive. Non-Responsive Proposals **will not** be awarded the contract.
- **REMEMBER to completely fill out** all REQUIRED FORMS (see REQUIRED FORMS Checklist). The **forms that are checked off are the only ones that apply to this Proposal. Please submit them in the correct order by Page Number.**
- **In the event the Proposal requests specific information; Please use the forms provided, attach additional sheets to the forms if necessary. DO NOT substitute your own forms.**
- If a form does not apply to your business or Proposal, please mark the form Not Applicable or some other similar wording at your discretion.
- DBE (Disadvantaged Business Enterprise) Obligation. RIPTA agrees to ensure that DBES, as outlined in 49 CFR Part 26, as amended, have the maximum opportunity to participate in the performance of contracts. Therefore, it is imperative that you read the DBE Section and complete the necessary Paperwork DBEs submitted must be certified by the State of Rhode Island at the time of Proposal submittal.
- Make Sure the Proposal Response is received by the RIPTA Purchasing Department by the designated date and time. Late Proposals will not be accepted.
- It shall be the responsibility of prospective proposers to check the State of Rhode Island, Department of Administration Division of Purchases Website for any addenda.
- Make Sure that the Proposal is returned in a **Sealed** Envelope or Box **CLEARLY LABELED** with the following Information: **Proposal Number and what the Proposal is for. This information should be in the lower left-hand corner**. The envelope or box should also be labeled **Proposal DOCUMENTS ENCLOSED**
- When in doubt, contact RIPTA Contracts Manager at sgomes@ripta.com
- **Proposal must be submitted pre-punched for standard three ring binders. A binder is not required. Please note that United Parcel Service will not deliver to our address.** **Please do not wait until the last minute with questions. RIPTA has limited Staff, which may not be available at all times.**

Please refer to Page 89 for Scope of Work

The following label shall be affixed to the envelope or package containing the Proposal response documents. It is imperative that his label be affixed to ensure the Proposal documents are received and routed in the proper manner:

Return Address

_____

_____

_____

PROPOSAL DOCUMENTS ENCLOSED

CONTRACTS MANAGER
Rhode Island Public Transit Authority
Purchasing Department
Room 217
705 Elmwood Avenue
Providence, RI 02907

PROPOSAL NUMBER: **24-28**

PROPOSAL FOR: **Pawtucket Central Falls Passenger Facilities Building RFP for Construction**

DUE: **May 23, 2024**

RHODE ISLAND PUBLIC TRANSIT AUTHORITY

705 Elmwood Avenue
Providence, RI 02907

REQUIRED COMPANY INFORMATION FORM

The following information is mandatory; Failure to complete this section may jeopardize your eligibility to be awarded the contract. ALL SECTIONS OF THIS FORM MUST BE FILLED OUT COMPLETELY

THIS INFORMATION IS REQUIRED IN ACCORDANCE WITH 49CFR 26.11.

THIS FORM IS REQUIRED FOR ALL PROPOSERS, PRIME CONTRACTORS, POTENTIAL SUBCONTRACTORS AND SUBCONTRACTORS

PLEASE PRINT OR TYPE YOUR INFORMATION

COMPANY NAME _____

COMPANY STREET ADDRESS: _____

_____

COMPANY MAILING ADDRESS: _____

COMPANY REMIT TO ADDRESS: _____

COMPANY CONTACT PERSON:_____

COMPANY TELEPHONE NUMBER:_____

EMERGENCY 24 HOUR TELEPHONE NUMBER(S) (IF APPLICABLE): _____

_____

COMPANY TELEFAX NUMBER: _____

COMPANY CONTACT EMAIL: _____

AGE OF THE FIRM (YEARS): _____

ANNUAL GROSS RECEIPTS (DOLLARS):_____

AVG 3 YEAR GROSS RECEIPTS LESS THAN 23.98 MILLION YES___ NO ____

DOES THE STATE OF RHODE ISLAND AS CERTIFY YOUR FIRM A DISADVANTAGED BUSINESS ENTERPRISE? _____

DUNS AND BRADSTREET NUMBER: _____

NAICS CODE: _____ **INDUSTRY** _____

NAICS Code can be found at the following website: www.naics.com

COMPANY STATUS: __PRIME CONTRACTOR _____SUBCONTRACTOR

RHODE ISLAND PUBLIC TRANSIT AUTHORITY
Request for Proposals Number 24-28

REQUEST FOR PROPOSALS

PROPOSAL NO:	**24-28**
DATE OF INVITATION:	**April 23, 2024**
PRE-PROPOSAL MEETING:	**May 6, 2024**
PROPOSAL RECEIPT DATE:	**May 23, 2023**
FURNISHING OF:	**Pawtucket Central Falls Passenger Facilities Building RFP for Construction**

FEDERAL TRANSIT ADMINISTRATION PROJECT NO. Various FTA Funding

The participant shall specify the official name of his/her company in the upper left-hand corner of the Proposal Response Envelope and show **PROPOSAL NO: and Proposal Description in the lower left-hand corner and send or deliver to**:

Purchasing Department
Room 217
705 Elmwood Avenue
Providence, RI 02907

The participant shall execute the offer form enclosed herewith.

Proposals will be reviewed and evaluated; all participants will be notified as soon as approval of award is made.

The Proposers shall execute the offer form enclosed herewith. The Proposers shall return **Three copy (ies)** with the **original** Proposal.

RIPTA RESERVES THE RIGHT TO REJECT PROPOSALS FROM PARTICIPANTS WHO HAVE NOT USED THE FORM AND PROPER PROPOSAL RESPONSE ENVELOPE FORMAT.

RIPTA RESERVES THE RIGHT TO CANCEL ANY PARTICULAR SOLICITATION, AND/OR REJECT ANY OR ALL PROPOSALS.

RHODE ISLAND PUBLIC TRANSIT AUTHORITY
Request for Proposals Number 24-28
TABLE OF CONTENTS

Contents

I. CALENDAR 1
- A. Date of Invitation: April 23, 2024 1
- B. Pre-Proposal Conference: 1
- C. Request for Approved equals and Questions 1
- D. Proposal Receipt: 1

II. NOTICE TO OFFERORS 2
- A. DATE: April 23, 2024 2

III. CONTACT LIST 3
- A. Contracts Manager 3

IV. PUBLIC COPY OF PROPOSAL SUBMITTAL 3

V. ELECTRONIC COPY OF THE PROPOSAL RESPONSE 3

VI. INSTRUCTIONS FOR PROPOSERS 4
- A. Definition of Terms. 4
  - 1. Procuring agency 4
  - 2. RIPTA 4
  - 3. Contractor 4
  - 4. Request for Proposals (RFP) 4
  - 5. Authorized Signature. 4
  - 6. Request for Proposals. 4
  - 7. Proposal Evaluation Factors/Criteria 4
  - 8. Basis of Award 4
  - 9. Notice of Award. 4
  - 10. Specifications. 4
  - 11. Tender 4
- B. Form of Proposal and Signature. 5
  - 1. Sole Owner. 5
  - 2. General Partnership. 5
  - 3. Limited Partnership 5
  - 4. Corporation. 5
- C. Proposal. 5
- D. Unauthorized Conditions. 5
- E. Submission of Proposal. 5
- F. Modification or Withdrawal of Proposal. 6
- G. Proposers Interviews or Presentations 6
- H. Samples 6
- I. Canvass of Proposals. 6
- J. Rejection of Proposals. 6
- K. Sales Tax Exemption. 6

RHODE ISLAND PUBLIC TRANSIT AUTHORITY

Request for Proposals Number 24-28

TABLE OF CONTENTS

	L.	Delivery Charges.	6
	M.	Alternative Proposal	7
	N.	Non-Collusive Affidavit.	7
	O.	Interest of RIPTA Personnel.	7
	P.	Penalty for Collusion.	7
	Q.	Proposal Acceptance Period	7
	R.	Postponement.	7
	S.	Amendment and/or Postponement.	7
	T.	Single Proposal.	8
	U.	Qualifications for Award.	8
	V.	Ineligible Proposers.	9
	W.	Disadvantaged Business Enterprise (DBE)	9
	X.	Addenda.	9
	Y.	Proposer's Requests and Appeals.	9
		1. Appointments.	9
		2. Amending Materials.	9
		3. Appeal.	9
		4. Withdrawal.	10
		5. Notification.	10
	Z.	Equal Employment Opportunity.	10
	AA.	Prohibited Interest.	10
	BB.	Interest of Members of Congress.	10
	CC.	Contract Commencement Date.	10
	DD.	Notice, Waiver and Applicable Law.	10
	EE.	Protest.	11
		1. General.	11
	FF.	Protests before Award	11
		1. Solicitation Phase.	11
		2. Pre-Award Phase.	12
	GG.	Protests after Award.	12
	HH.	Source Selection and Contract Award	12
	II.	Title VI Assurances	12
	JJ.	Energy Conservation Requirements:	13
	KK.	Program Fraud	13
	LL.	No Government Obligation to Third Parties:	13
	MM.	Veteran's Employment	14
	NN.	Solid Waste (Recycled Products)	14
	OO.	Prohibition on certain telecommunications and video surveillance services or equipment.	14
	PP.	Disputes, Breaches, Defaults, and Litigation.	15
VII.	GENERAL PROVISIONS		16
	A.	Definitions:	16
		1. Authority	16

TABLE OF CONTENTS

	2.	Contracting Manager	16
	3.	Directed, Ordered, designated, or prescribed.	16
B.	Changes:		16
C.	Extras:		17
D.	Inspection:		17
E.	Responsible:		17
F.	Title and Risk of Loss		18
G.	Storage of Contractor Material on RIPTA Property		18
H.	Payments		18
I.	Stop Work Order		18
J.	Disputes		18
K.	Default		19
L.	Termination for Convenience of the Authority		20
M.	Federal, State and Local Taxes		21
N.	Walsh-Healey Public Contracts Act		21
O.	Officials Not to Benefit		21
P.	Covenant against Contingent Fees		21
Q.	Notice to the Authority of Labor Disputes		21
R.	Patent Indemnity		22
S.	Use of Trade Names		22
T.	Rights in Technical Data		22
U.	Audit and Inspection of Records		23
V.	Gratuities		24
W.	Limitation on Withholding Payments		24
X.	New Material		24
Y.	Order of Precedence		25
Z.	Correction of Deficiencies		25
	1.	Definitions:	25
	2.	General:	25
	3.	Deficiencies in accepted supplies or services:	25
	4.	Correction of Deficiencies by Contractor:	26
	5.	Deficiencies in supplies or services not yet accepted:	26
	6.	Extensions or Delays	26
	7.	Contract Price	26
	8.	Failure to correct:	26
AA.	Assignment		27
BB.	Certificates of Current Cost or Pricing Data		27
CC.	Cargo Preference		28
DD.	Buy America Act		28
EE.	Equal Opportunity		28
	1.	Race, Color, Creed, National Origin, Sex.	29
	2.	Age	29
	3.	Disabilities	29

TABLE OF CONTENTS

FF.	Nondiscrimination under Federal Grants		29
GG.	Rights in Data and Copyrights-FTA (June 1996)		30
HH.	Davis-Bacon Act		30
	1.	Minimum wages	30
	2.	Withholding	34
	3.	Payrolls and basic records	34
	4.	Apprentices and trainees	36
	5.	Compliance with Copeland Act requirements	38
	6.	Subcontracts	38
	7.	Contract termination: debarment	38
	8.	Compliance with Davis-Bacon	39
	9.	Disputes concerning labor standards.	39
	10.	Certification of eligibility.	39
II.	Contract Work Hours and Safety Standards Act		39
	1.	Overtime requirements	39
	2.	Violation; liability unpaid wages; liquidated damages	39
	3.	Withholding for unpaid wages; liquidated damages	40
	4.	Subcontracts	40
	5.	Payrolls and basic records	40
	6.	Contract Work Hours and Safety Standards Act	41
	7.	Subcontracts	41
JJ.	Seismic Safety Requirements		41
KK.	Energy Conservation Requirements		41
LL.	Clean Air		42
MM.	Clean Water		42
NN.	Recovered Materials		42
OO.	Fly America Requirements		42
PP.	National Intelligent Transportation Systems Architecture		43
QQ.	Federal Changes		43
RR.	Incorporation of Federal Transit Administration (FTA) Terms		43
SS.	Force Majeure		43
TT.	Governing Law		44
UU.	Indemnification		44
VV.	Policy Concerning Federal and Stated False Claim Laws		44
	1.	Prohibitions against False Claims	44
	2.	Prohibitions of the Federal False Claims Act	44
	3.	Enforcement	45
WW.	American with Disabilities Act		45
XX.	Expense Reimbursement Professional Services Contracts		45
	1.	Automobile mileage	45
	2.	Per Diem Expenses	45
	3.	Lodging	45
	4.	Miscellaneous Expenses	46

5. Estimated Expenses 46
YY. Background Check 46
ZZ. Security Requirements for Work on RIPTA Property 46
AAA. Records Retention 46
BBB. Litigation 46
CCC. Public Records/Confidentiality 47
DDD. Utilization of Small Business Sub-Contractors 47
EEE. Federal, State and Local Safety, Health and 47
FFF. Licenses and Certifications 47
GGG. Covid 19 Safety Procedures 47
HHH. Retainage for Construction and Design Build Contracts 48
III. Substantial completion 48
JJJ. Mobilization/Demobilization 48
VIII. REQUEST FOR APPROVED EQUAL FORM 49
IX. REQUIRED PROPOSAL SUBMISSIONS 50
X. SOLICITATION FORM 51
XI. OFFER FORM 52
XII. STATEMENT OF ELIGIBILITY FORM 53
XIII. AFFIDAVIT OF NON-COLLUSION FORM 54
XIV. CERTIFICATION OF RESTRICTIONS ON LOBBYING FORM 55
XV. BUY AMERICA CERTIFICATION REQUIREMENTS I 56
XVI. BUY AMERICA CERTIFICATION REQUIREMENTS II 57
XVII. BUY AMERICA PRE-AWARD AND POST-DELIVERY AUDITS: 58
A. Prior to Contract award, 58
B. After delivery and acceptance of the vehicles, 58
C. Authority Review 58
XVIII. DISADVANTAGED BUSINESS ENTERPRISES PROGRAM 59
A. Policy 59
B. Definitions. 60
1. Joint Venture 60
2. Disadvantaged Business 60
3. Small Business Concern 61
4. Socially and Economically Disadvantaged Individuals 61
C. Recognition of DBE Commitment 61
D. Proposal Submissions for Contracts with DBE Utilization Goals and/or DBE Participation 61
E. Good Faith Efforts for DBE Participation: 62
F. Procedure Prior to Contact Award 63
1. Guidance Concerning Good Faith Efforts 63
G. Termination of DBE Subcontractors 64
H. Substitution of Subcontractors 64
I. Program Compliance 65
J. Maintenance of Records 65

TABLE OF CONTENTS

	K.	Prompt Payment	65
	L.	Monitoring Payments to DBEs	65
XIX.	DISADVANTAGED BUSINESS ENTERPRISE REQUIRED FORMS		66
	A.	Attachment A	67
	A.	Attachment B	68
	B.	Attachment C	69
	A.	Attachment D.	70
	A.	Attachment E	71
	B.	Attachment F	72
I.	PERFORMANCE AND PAYMENT BOND INFORMATION		73
II.	PROPOSAL GUARANTEE (SURETY)		73
III.	REQUIRED INSURANCE		73
	A.	Minimum limits	73
	B.	Certificate Requirements	73
IV.	GENERAL CONTRACT COMPLIANCE CERTIFICATE		75
	A.	Equal Opportunity Clause	75
	B.	Age Discrimination	76
	C.	Employment of the Handicapped	77
V.	CERTIFICATE OF NON-SEGREGATED FACILITIES		79
VI.	NOTICE OF PROSPECTIVE SUBCONTRACTORS		80
	A.	Affirmative Action Compliance Program	80
	B.	Employer's Information Report (EE)-1) Form 100	80
	C.	Notice to All Vendors	80
	D.	Post Award Conference	80
	E.	Signature Required	80
VII.	GENERAL CONTRACT COMPLIANCE CERTIFICATE		81
VIII.	DAVIS BACON ACT COMPLIANCE		81
IX.	CONTRACTOR APPRENTICESHIP CERTIFICATION FORM		82
X.	CERTIFICATION OF PRIMARY PARTICIPANT FORM		83
XI.	DEBARMENT CERTIFICATION		84
XII.	CERTIFICATION OF A SUBCONTRACTOR FORM		84
XIII.	NON-RESIDENT CONTRACTOR INFORMATION		85
XIV.	DRUG & ALCOHOL TESTING PROGRAM		86
XV.	DRUG AND ALCOHOL POLICY ACKNOWLEDGEMENT		86
I.	TELECOMMUNICATIONS CLAUSE		87
II.	FEDERAL TAX LIABILITY AND RECENT FELONY CONVICTION		88

RHODE ISLAND PUBLIC TRANSIT AUTHORITY

Request for Proposals Number 24-28

I. CALENDAR

A. Date of Invitation: April 23, 2024

B. Pre-Proposal Conference:

1. **Date:** **May 6, 2024**
2. **Time:** **1:00 p.m. Eastern Time**
3. **Place:** **RIPTA Board Conference Room**
   269 Melrose Street, Providence, RI

Any and all appeals must be submitted in writing prior to the time and date set for the Pre-Proposal Meeting.

Safety Vests are required if you plan on touring any RIPTA Facilities other than the Conference Room as part of this meeting.

C. Request for Approved equals and Questions

must be submitted **ELECTRONICALLY IN MICROSOFT WORD FORMAT** to RIPTA Contracts Manager by:

1. **Date:** **May 13, 2024**
2. **Time:** **1:00 p.m. Eastern Time**
3. **Response to approved equals:5-10 days prior to Proposal opening.**

Please submit all of your questions in writing in one document by the deadline above; do not submit them piecemeal.

Requests for Approved Equals must be accompanied by adequate Technical Information for the Authority to review. Requests submitted with insufficient information will not be considered.

Requests for Approved Equals/Questions submitted after the deadline will NOT be considered

It should be noted that Requests for Approved Equals/Questions can be used for both questions regarding the technical specifications and regarding contractual terms and conditions

Approved Equals must be submitted by the Prime Contractors only. Potential Subcontractors must coordinate with Prime Contractors for submission of any products they wish to submit.

D. Proposal Receipt:

1. **Date:** **May 23, 2024**
2. **Time:** **1:00 p.m. Eastern Time**

II. NOTICE TO OFFERORS

A. DATE: April 23, 2024

The Rhode Island Public Transit Authority (RIPTA) is requesting Proposals for the following:

Pawtucket Central Falls Passenger Facilities Building
RFP for Construction

All Proposals shall be submitted in the required format and quantity as set forth in the RFP. This Proposal must be received byMay 23, 2024 at 1:00 p.m. Eastern Time by the Purchasing Department, Room 217, 705 Elmwood Avenue Providence, Rhode Island 02907. **Please be advised that United Parcel Service does not deliver to this address.**

Award of contract is subject to financial assistance of 80% from the U.S. Department of Transportation (FTA Project Various FTA Funding) and 20% from RIPTA. The successful Proposer shall comply with the conditions and terms applicable thereunder.

A Pre-Proposal Meeting will be held at 300 Pine Street, Pawtucket, RI 02860 at 1:00 pm Eastern Time on May 6, 2024. Proposers are expected to download and review the Proposal Technical Specifications prior to the pre-Proposal meeting.

The successful Proposer shall be required to comply with all applicable Equal Opportunity and Disadvantaged Business Enterprise regulations. Proposers are encouraged to view the Rhode Island Minority Business Enterprise (RIMBE) website for a list of Disadvantaged Business Enterprise vendors that may be interested in working with your company on this Proposal. All DBEs submitted must be certified by the State of Rhode Island at the time of Proposal submittal.
The RIMBE Website address is http://odeo.ri.gov/offices/mbeco/dbe-program.php

The Disadvantaged Business Enterprise goal for this project is Zero Percent %

The successful Proposer shall be required to certify that he is not on the Comptroller General's List of Ineligible Contractors.

An electronic copy of the IFB is available on the State of Rhode Island, Department of Administration, Division of Purchases Website.
http://www.purchasing.ri.gov/bidding/ExternalBidSearch.aspx
RIPTA Solicitations can be found in the Quasi-Public Sector, listed under the Rhode Island Public Transit Authority. Bidders must ***download the Bid documents and complete the required forms.***

If you are unable to access the Internet, a printed copy of the Proposal may be obtained from RIPTA's Purchasing Department by calling Sheryl Gomes at (401) 784-9500, ext. 1281.

III. CONTACT LIST

Please contact RIPTA's Contracts Manager with any questions you may have regarding this Procurement.

A. Contracts Manager
Ms. Sheryl Gomes
sgomes@ripta.com

All contacts with the Authority regarding this Procurement Action shall be directed to the RIPTA Contracts Manager. The Contracts Manager will contact the appropriate RIPTA Staff as needed. The Authority does not assume responsibility for the accuracy of information obtained from other RIPTA Staff.

Failure to adhere to this procedure may result in rejection of your Proposal.

IV. PUBLIC COPY OF PROPOSAL SUBMITTAL

Each Proposers must submit a copy of their proposal submittal to be available for public inspection upon opening of the proposals. The burden to identify and withhold from the public copy that is released at the proposal opening any trade secrets, commercial or financial information or other information the Proposers deems not subject to public disclosure pursuant to Chapter 38-2 of the Rhode Island Access to Public Records Act shall ret with the Proposers submitting the proposal. Failure to submit a "Public Copy" will result in the submitted copy being deemed available to the public.

V. ELECTRONIC COPY OF THE PROPOSAL RESPONSE

Each Proposer must submit an electronic copy of their Proposal Response. **This should be on a USB drive** This is in addition to the number of printed copies requested elsewhere in this document. **This must be submitted WITH the proposal, NOT sent separately. Please DO NOT Password Protect the electronic version.**

VI. INSTRUCTIONS FOR PROPOSERS

A. Definition of Terms.

Whenever herein or in the Proposal contract documents the following terms, pronouns or abbreviations are used, the intent and meaning shall be interpreted as follows:

1. **Procuring agency**
   Procuring Agency is defined as the Rhode Island Public Transit Authority.
2. **RIPTA**
   RIPTA shall refer to the Rhode Island Public Transit Authority.
3. **Contractor**
   Contractor shall mean the successful Proposers to whom a contract is awarded.
4. **Request for Proposals (RFP)**
   Request for Proposals shall mean the complete assembly of related documents, whether attached or incorporated by reference, furnished by RIPTA for the purpose of proposing, including the Request for Proposals, the Instructions for Proposers, Supplemental Conditions, Specifications, Proposal Form, Proposal Attachments, and Addenda, if any. Proposals shall be in strict accordance with the Terms of the RFP.
5. **Authorized Signature.**
   The person who is executing this contract on behalf of the Proposers and who is authorized to bind the Proposers.
6. **Request for Proposals.**
   The advertisement of the issuance by RIPTA of a Request for Proposals, which is published, posted, and sent to prospective proposers informing interested persons of the proposed procurement.
7. **Proposal Evaluation Factors/Criteria**
   Evaluation Factors/Criteria given in the Technical Specifications are not listed in order of priority. The order of the listing has no relationship to the relative importance of the factors.
8. **Basis of Award**
   The Contract will be awarded to the vendor that submits the Proposal that is rated the overall best value to the Authority.
9. **Notice of Award.**
   The receipt of a Purchase Order or Letter of Contract issued by RIPTA shall serve as notice of the award of contract.
10. **Specifications.**
    The written description and statement of necessary requirements of the equipment/construction, supplies and/or service to be provided.
11. **Tender**
    The Proposer's documents and all attachments tendered in response to the Proposal requests.

B. Form of Proposal and Signature.

The Proposal shall be presented with an original and Three copies on the forms provided herewith by RIPTA and shall be enclosed in a sealed envelope marked and addressed as required on the Proposal form.

Depending upon whom the Proposal is made by the following signature and instructions must be followed:

1. **Sole Owner.**
   Proposal shall be signed with his full name, and his address shall be given.
2. **General Partnership.**
   Proposal shall be signed with the partnership name by a partner who shall also sign his/her own name, and the name and address of each partner shall be given.
3. **Limited Partnership**
   Proposal shall be signed with the partnership name by a general partner who has authorization to do so who shall also sign his/her own name.
4. **Corporation.**
   Proposal shall be signed by an officer or other individual who has the full and proper authorization to do so, and the corporate seal shall be affixed to the contract, or if the corporate seal is not affixed to the contract and it is signed by a person other than an officer, there must be attached to the contract a certified copy of a resolution of the corporation authorizing such officer or person to sign written contracts for and on behalf of the corporation.

C. Proposal.

The terms of the Proposal must not be changed. All blank spaces in said form shall be properly filled. Alterations by erasure or interlineation must be explained or noted in the Proposal over the signature of the Proposers. If the unit price and the total amount named by a Proposers for any item, do not agree, **the unit price** alone will be considered as representing the Proposer's intention.

D. Unauthorized Conditions.

Unauthorized conditions, limitations or provisions attached to a Proposal will render it informal and may cause its rejection.

E. Submission of Proposal.

Prior to the hour specified in the Request for Proposals inviting sealed Proposals, all Proposals shall be delivered to the Contracts Manager at the address shown in the Request for Proposals. All costs associated with preparation and submission of a Proposal shall be borne by the Proposers. The Authority assumes no responsibility for these costs.

Each Proposal shall be in a sealed envelope properly labeled on the outside with the Proposal number and description. No Proposals received after said

time or at any place other than the time and place as stated in the Request for Proposals will be considered. **No Proposal electronically transmitted, e.g., email and fax will be considered.**

F. Modification or Withdrawal of Proposal.

A Proposal may be modified or withdrawn by written notice received in the office designated in the Request for Proposals not later than the exact time set for receiving of Proposals A Proposal may be withdrawn in person by a Proposers, or his/her authorized representative provided his/her identity is made known and he signs a receipt for the Proposal if the withdrawal is prior to the exact time set for receiving the Proposals. Modifications of Proposals and requests for withdrawal of Proposals which are received in the office designated in the Request for Proposals after the exact time set for opening are "late modifications" and "late withdrawals" respectively. A late modification or late withdrawal will be subject to the rules and procedures applicable to late Proposals. A late modification of an otherwise successful Proposal will be opened at any time it is received. If, in the judgment of the Director of Procurement, it makes the terms of the Proposal more favorable to RIPTA, it will be presented to the Contract Manager and Director of Procurement for consideration.

G. Proposers Interviews or Presentations

The Authority reserves the right, at its sole discretion, to request Proposal respondents to make presentations or interviews. This may be done in person, or through electronic means (i.e., telephone or via the internet). The purpose of this presentation is to enhance the presentation, not to amend it. Proposers should prepare their Proposal responses based upon the assumption that there will not be interviews, unless specifically stated in the Technical Specifications. The Written Proposal should reflect their best effort.

H. Samples

Samples, when required, must be submitted within the time specified, at no expense to RIPTA. If not, destroyed or used up during testing, samples will be returned upon request at the Proposer's expense.

I. Canvass of Proposals.

At the hour specified in the Request for Proposals, a designee will receive the Proposals. An award will be made, or Proposals rejected by RIPTA within the time specified in the specifications or Proposal forms, or if not specified, within a reasonable time after Proposals have been opened.

J. Rejection of Proposals.

RIPTA reserves the right to reject any and all Proposals. The right is reserved to reject any or all Proposals, and to waive technical defects as the interest of RIPTA may require. Each Proposer shall be notified if all Proposals are rejected.

K. Sales Tax Exemption.

RIPTA confirms there are no state, local, or federal taxes applicable to this purchase.

L. Delivery Charges.

Unless otherwise stated in the RFP, proposers shall include freight and/or delivery charges in the total price of their Proposals.

M. Alternative Proposal

Submissions of an alternative Proposal or Proposals, except as specifically called for in the Specifications or RFP, will render the Proposal informal and may cause its rejection.

N. Non-Collusive Affidavit.

The Proposers represents and warrants that its Proposal is genuine and not sham or collusive or made in the interest or in behalf of any person not therein named, and that the Proposers has not, directly or indirectly, induced or solicited any other Proposers to submit a sham Proposal or any other person, firm or corporation to refrain from proposing, and that the Proposers has not in any manner sought by collusion to secure itself an advantage over any other Proposers.

O. Interest of RIPTA Personnel.

The Proposers represents and warrants that neither the Chief Executive Officer, nor any Board Member, nor any employee of RIPTA, is in any manner interested directly or indirectly in the Proposal or in the contract, which may be made under it, or in any expected profits to arise therefrom.

P. Penalty for Collusion.

If at any time it shall be found that the person, firm or corporation to whom a contract has been awarded has, in presenting any Proposal or Proposals, colluded with any other party or parties, then the contract so awarded shall be **voidable** by RIPTA and the Contractor and his bondsmen shall be liable to RIPTA for all loss or damage which RIPTA may suffer thereby and the RIPTA Board may advertise for a new contract for said labor, supplies, materials, equipment or service.

Q. Proposal Acceptance Period

All Proposals shall remain in effect one hundred twenty (120) calendar days from the date of Proposal opening. Proposals offering less than one hundred twenty (120) calendar days for acceptance by RIPTA from the date set for opening will be considered non-responsive and will be rejected.

R. Postponement.

RIPTA reserves the right to postpone, for its own convenience, the date the Proposal is to be received, but any Proposers whose Proposal has already been submitted to RIPTA when the decision to postpone is made shall be afforded the opportunity to revise or withdraw its Proposal.

S. Amendment and/or Postponement.

RIPTA reserves the right to revise or amend the specifications up to the time set for the receiving of Proposals. Such revisions and addenda, if any, shall be announced by addenda to this solicitation. It shall be the responsibility of prospective proposers to check the State of Rhode Island, Department of Administration Division of Purchases Website for any addenda. If the revisions and addenda require changes in quantities or price Proposal, or both, the date set for receiving Proposals may be postponed by such number

of days as in the opinion of RIPTA shall enable proposers to revise their Proposals. In any case, Proposal openings shall be at least seven (7) working days after the last addendum, and the addenda shall include an announcement of the new date, if applicable.

T. Single Proposal.

1. In the event a single Proposal is received, RIPTA will, at its option, either conduct a price and/or cost analysis of the Proposal and make the award by negotiation or reject the Proposal and re-advertise. A price analysis is the process of examining the Proposal and evaluating a prospective price without evaluating the separate cost elements. Price analysis shall be performed by comparison of the price quotations submitted on other current quotations, with published price lists, or other established or competitive prices. The comparison shall be made to a purchase of similar quantity and involving similar specifications. Where a difference exists, a detailed analysis must be made of this difference and costs attached thereto.
2. Where it is impossible to obtain a valid price analysis, it may be necessary for RIPTA to conduct a cost analysis of the Proposal price. Cost analysis is the review and evaluation of a contractor's cost or pricing data and of the factors applied in projecting from such data the estimated costs of performing the contract, assuming reasonable economy and efficiency.
3. The price and/or cost analysis shall be made by RIPTA's Procurement Department.

U. Qualifications for Award.

The Proposers must be a person, firm, or corporation that:

1. Has in operation, or has the capability to have in operation, a manufacturing plant adequate to assure delivery of all equipment within the time specified under this contract.
2. Has adequate service personnel, or has the capability to have such personnel, to satisfy any service problems that may arise during the warranty period.
3. Has the necessary facilities and financial resources or has the capability to obtain such facilities and resources to complete the contract in a satisfactory manner within the required time.
4. The Procuring agency shall have the right to conduct a pre-award survey on each Proposers. Doubt as to the capability or technical ability, productive capacity, or financial strength, which cannot be resolved affirmatively, shall require a determination of non-responsibility by RIPTA.

V. Ineligible Proposers.

The Proposers shall be required to certify, upon request, that it is not on the U.S. Comptroller General's Consolidated List of Persons or Firms currently debarred for Violations of Various Public Contracts Incorporating Labor Standards Provisions.

W. Disadvantaged Business Enterprise (DBE)

The Rhode Island Public Transit Authority shall not discriminate on the basis of race, color, national origin, or sex in the award and performance of any DOT-assisted contract or in the administration of its DBE Program or the requirements of 49 CFR part 26. RIPTA will take all-necessary and reasonable steps under 49 CFR part 26 to ensure nondiscrimination in the award and administration of DOT-assisted contracts. RIPTA's DBE Program, as required by 49 CFR part 26 and as approved by DOT, is incorporated herein by reference. Implementation of this DBE Program is a legal obligation and failure to carry out its terms shall be a violation of Federal law and a breach of any applicable DOT-assisted contract. Upon notification to RIPTA of its failure to carry out its approved DBE Program, the DOT may impose sanctions as provided for under 49 CFR part 26 and may, in appropriate cases where a firm/contractor makes a false or fraudulent statement in connection with participation of a DBE in any DOT assisted program or otherwise violates Federal law, refer the matter for prosecution under 18 U.S.C. 1001 and/or under 49 CFR Part 31, Program Fraud Civil Remedies Act. ..

X. Addenda.

RIPTA may issue addenda containing amendments to its proposal solicitation documents. Any addendum issued less than seven (7) days prior to the receipt of Proposal shall, if necessary, contain a provision postponing the date of the receipt of Proposal to a date that will provide proposers adequate time to respond to the addenda. Addenda shall be numbered sequentially.

Y. Proposer's Requests and Appeals.

1. Appointments.

Proposers and suppliers may make appointments with the contact person listed in the specifications to discuss the specifications.

2. Amending Materials.

Any amending material issued by RIPTA pertaining to the Proposal solicitation documents (including, without limitation: clarifications, approved equals, and corrections) shall be set forth in an addendum and sent to all parties who are on record as having obtained a copy of the Proposal solicitation documents.

3. Appeal.

Should any Proposers or supplier choose to appeal RIPTA's decision, such appeal must be in writing and received by RIPTA not less than seven (7) calendar days before the date of receipt of Proposal. RIPTA has no obligation to consider appeals received less than seven (7) calendar days before the date of the receipt of Proposal.

4. **Withdrawal.**
The Proposers or supplier may withdraw its appeal at any time before RIPTA issues a final decision. There shall be no further review of the appeal after the final decision is issued.

5. **Notification.**
Should RIPTA postpone the date of the receipt of Proposal owing to the appeal, RIPTA shall notify all parties who are on record as having obtained a copy of the Proposal solicitation documents that an appeal has been filed and that the date of the receipt of Proposal shall be postponed until RIPTA has issued its final decision. RIPTA shall issue appropriate amendments postponing the re-scheduling date of the receipt of Proposal.

Z. Equal Employment Opportunity.
In connection with the execution of this contract, the Contractor shall not discriminate against any employee or applicant for employment because of race, color, sex, age, national origin, religion, sexual orientation, gender identity or expression, disability status or veteran status. The Contractor shall take affirmative action to ensure that applicants are employed and that employees are treated during their employment, without regard to their race, color, sex, age, national origin, religion, sexual orientation, gender identity or expression, disability status or veteran status. Such actions shall include, but not limited to, the following: employment, promotion, demotion, transfer, recruitment or recruitment advertising, layoff, or termination, rates of pay, or other forms of compensation, and selection for training, including apprenticeship.

AA. Prohibited Interest.
No member, officer, or employee of RIPTA or of a local public body during his tenure or for one year thereafter shall have any interest, directly or indirectly, in this contract or the proceeds thereof.

BB. Interest of Members of Congress.
No member or delegate to the Congress of the United States shall be admitted to any share or part of this contract or to any benefit arising therefrom.

CC. Contract Commencement Date.
The contract commencement date shall be the date of the signing of the Purchase Order or by Letter of Contract signed by an authorized RIPTA employee.

DD. Notice, Waiver and Applicable Law.
Notice given to Contractor and RIPTA shall be given to the parties in writing by certified mail at the respective addresses set forth herein. Waiver by RIPTA of a breach by Contractor of any provision of this contract shall not be deemed a waiver of future compliance therewith, and such provision as well of future provisions hereunder, shall remain in full force and effect. The rights and duties of the parties hereto shall be determined by the laws of the State of Rhode Island, and to that end this agreement shall be considered and

construed as a contract made an to be performed in the State of Rhode Island.

EE. Protest.

1. General.

Protests will be accepted from prospective Proposers or Offerors whose direct economic interest would be affected by the award of a Contract or by failure to award a contract. The RIPTA Director of Purchasing will consider all protests or objections filed in a timely manner regarding the award of a contract, whether submitted before or after award. If the protest is oral and the matter cannot be otherwise resolved, written confirmation of the protest will be requested. Protest submissions should be concise, logically arranged, and clearly state the grounds for the protest. Protests must include at least the following information:

a. Name, address, and telephone number of protester.
b. Identification of the solicitation or Contract number.
c. A detailed statement of the legal and factual grounds of protest, including copies of relevant documents.
d. A statement as to what relief is requested.
e. Protest should be sent to:
   Director of Procurement
   RI Public Transit Authority
   Room 217
   705 Elmwood Avenue
   Providence, RI 02907
f. Protests must be filed with the RIPTA in accordance with our procedures and time requirements. The protest to RIPTA must be complete and contain all the issues that the protester believes relevant. RIPTA will respond to each substantive issue raised in the protest. Failure to include an issue in the protest eliminates that issue from further consideration. All protest decisions entered by RIPTA are final in accordance with FTA "Third Party Contract" Regulation.
g. On occasion, when considered appropriate, an informal conference on the merits of the protest with all interested parties may be held.

FF. Protests before Award

1. Solicitation Phase.

Protests concerning the solicitation must be submitted in writing five (5) working days prior to Proposal opening or closing date for receipt of Proposals. If the written protest is not received by the time specified, award may be made in the normal manner unless the Director of Purchasing, upon investigation, finds that remedial action is required. Oral protests not followed up by a written protest will be disregarded.

Notice of a protest and the basis therefore will be given to all potential Proposers or Offerors.

2. Pre-Award Phase.

When a protest against the making of an award is received after receipt of Proposals but prior to award, the Director of Purchasing may determine to withhold the award pending disposition of the protest. The proposer or proposers whose Proposals might become eligible for award should be requested, before expiration of the time for acceptance of their Proposals, to extend the time for acceptance (with consent of sureties, if any) to avoid the need for re-advertising. RIPTA will provide a written response to each material issue raised in the written protest.

Where a written protest against the making of an award is received in the time specified, award will not be made prior to five (5) working days after resolution of the protest. If a protest has been filed with FTA, award will not be made during the pendency of that protest. **It should be noted that the FTA will not substitute its judgment for that of RIPTA unless the matter is primarily a Federal concern.**
Circumstances where RIPTA would allow an exception to the stated protest award policy are:

a. The items to be procured are urgently required.
b. Delivery or performance will be unduly delayed by failure to make award promptly; or,
c. Failure to make award will otherwise cause undue harm to RIPTA or the Federal Government.

If award is made, the Director of Procurement will document the file to explain the need for an award and will give written notice of the decision to proceed with the award to the protester and, as appropriate, to others concerned.

GG. Protests after Award.

A protest received not later than 10 (ten) working days after award shall be reviewed by the Director of Purchasing. The Contractor will, in any event, be furnished with the notice of protest and the basis, therefore. When it appears likely that an award may be invalidated and a delay in receiving the supplies or services is not prejudicial to the Authority's interest, the Director of Purchasing should consider a mutual agreement with the Contractor to suspend performance on a no-cost basis.

HH. Source Selection and Contract Award

The contract shall be awarded with reasonable promptness by written notice to the responsive and responsible Proposers whose Proposal will be evaluated using a best value approach. The ultimate selection of an offeror will be on the basis of overall best value to the Authority.

II. Title VI Assurances

Contractors and subcontractors will be required to comply with all requirements imposed by Title VI of the Civil Rights Act of 1964 (49 U.S.C. §2000d, et seq.), and the Assurances by RIPTA pursuant thereto.

JJ. Energy Conservation Requirements:

The Contractor agrees to comply with mandatory standards and policies relating to energy efficiency, which are contained in the State of Rhode Island Energy Conservation Plan issued in compliance with the Energy Policy and Conservation Act.

KK. Program Fraud

1. The Contractor acknowledges that the provisions of the Program Fraud Civil Remedies Act of 1986, as amended, 31 U.S. C. § §3801 et. Seq. and U. S. Department of Transportation regulations. "Program Fraud Civil Remedies" 49 C.F. R. Part 31, apply to its actions pertaining to this Project. Upon execution of the underlying contract, the Contractor certifies or affirms the truthfulness and accuracy of any statement it has made , it makes, it may make, or causes to be made, pertaining to the underlying contract or the Federal Transit Administration assisted project for which this contract work is being performed. In addition to other penalties that may be applicable, the Contractor further acknowledges that if it makes, or causes to be made, a false, fictitious, or fraudulent claim, statement, submission, or certification, the Federal Government reserves the right to impose the penalties of the Program Fraud Civil Remedies Act of 1986 on the Contractor to the extent the Federal Government deems appropriate.
2. The Contractor also acknowledges that if it makes, or causes to be made, a false, fictitious, or fraudulent claim, statement, submission or certification to the Federal Government under a contract connected with a project that is financed in whole or in part with Federal assistance originally awarded by the FTA under the authority of 49 U.S.C. § 5307, the Government reserves the right to impose the penalties of 18 U.S.C. § 5307 (n) (1) on the Contractor, to the extend the Federal Government deems appropriate.
3. The Contractor agrees to include the above two clauses in each subcontract financed in whole or in part with Federal assistance provided by FTA. It is further agreed that the clauses shall not be modified, except to identify the subcontractor who will be subject to the provisions.

LL. No Government Obligation to Third Parties:

1. The Purchaser and the Contractor acknowledge and agree that, notwithstanding any concurrence by the Federal Government in or approval of the solicitation or award of the underlying contract, absent the express written consent by the Federal Government, the Federal Government is not a party to this contract and shall not be subject to any obligations or liabilities to the Purchaser, Contractor, or any other

party (whether or not a party to that contract) pertaining to any matter resulting from the underlying contract.

2. The Contractor agrees to include the above clause in each subcontract financed in whole or in part with Federal assistance provided by FTA. It is further agreed that the clause shall not be modified, except to identify the subcontractor who will be subject to its provisions.

MM. Veteran's Employment

The Contractor shall ensure that contractors working this project shall give a hiring preference, to the extent practicable, to veterans (as defined in Section 2108 of title 5) who have the requisite skills and abilities to perform the work required under the contract. This shall not be understood, construed, or enforced in any manner that would require an employer to give a preference to any veteran over any equally qualified applicant who is a member of any racial or ethnic minority, female, an individual with a disability, or a former employee.

NN. Solid Waste (Recycled Products)

This Contract must comply with Section 6002 of the Solid Waste Disposal Act as amended by the Resource Conservation and Recovery Act. The requirements of Section 6002 include procuring only items designated in guidelines of the Environmental Protection Agency (EPA) at 40 C.F.R. part 247 that contain the highest percentage of recovered materials practicable, consistent with maintaining a satisfactory level of competition, where the purchase price of the item exceeds $10,000 or the value of the quantity acquired during the preceding fiscal year exceeded $10,000; procuring solid waste management services in a manner that maximizes energy and resource recovery; and establishing an affirmative procurement program for procurement of recovered materials identified in the EPA guidelines.

OO. Prohibition on certain telecommunications and video surveillance services or equipment.

Vendors responding to this contract are prohibiting from providing the equipment that uses covered telecommunications equipment or services as a substantial or essential component of any system,
or as critical technology as part of any system. As described in Public Law 115–232, section 889, covered telecommunications
equipment is telecommunications equipment produced by Huawei Technologies Company or ZTE Corporation (or any subsidiary or
affiliate of such entities). (i) For the purpose of public safety,
security of government facilities, physical security surveillance of critical infrastructure, and other national security purposes, video surveillance and telecommunications equipment produced by Hytera Communications Corporation, Hangzhou Hikvision Digital
Technology Company, or Dahua Technology Company (or any subsidiary or affiliate of such entities). (ii) Telecommunications or video surveillance services provided by such entities or using such equipment. (iii)

Telecommunications or video surveillance equipment or services produced or provided by an entity that the Secretary of Defense, in consultation with the Director of the National Intelligence
or the Director of the Federal Bureau of Investigation, reasonably believes to be an entity owned or controlled by, or otherwise connected to, the government of a covered foreign country.

PP. Disputes, Breaches, Defaults, and Litigation.

The FTA Interest. FTA has a vested interest in the settlement of any violation of federal law, regulation, or requirement, or any disagreement involving the Award, the accompanying Underlying Agreement, and any Amendments thereto including, but not limited to, a default, breach, major dispute, or litigation, and FTA reserves the right to concur in any settlement or compromise. (b) Notification to FTA; Flow Down Requirement. If a current or prospective legal matter that may affect the Federal Government emerges, the RIPTA must promptly notify the FTA Chief Counsel and FTA Regional Counsel for the Region in which the RIPTA is located. The Contractor must include a similar notification requirement in its subcontracts at every tier, for any agreement that is a "covered transaction" according to 2 C.F.R. §§ 180.220 and 1200.220. (1) The types of legal matters that require notification include, but are not limited to, a major dispute, breach, default, litigation, or naming the Federal 95 Government as a party to litigation or a legal disagreement in any forum for any reason. (2) Matters that may affect the Federal Government include, but are not limited to, the Federal Government's interests in the Award, the accompanying Underlying Agreement, and any Amendments thereto, or the Federal Government's administration or enforcement of federal laws, regulations, and requirements. (3) Additional Notice to U.S. DOT Inspector General. RIPTA shall promptly notify the U.S. DOT Inspector General in addition to the FTA Chief Counsel or Regional Counsel for the Region in which the RIPTA is located, if the RIPTA has knowledge of potential fraud, waste, or abuse occurring on a Project receiving assistance from FTA. The notification provision applies if a person has or may have submitted a false claim under the False Claims Act, 31 U.S.C. § 3729, et seq., or has or may have committed a criminal or civil violation of law pertaining to such matters as fraud, conflict of interest, bid rigging, misappropriation or embezzlement, bribery, gratuity, or similar misconduct involving federal assistance. This responsibility occurs whether the Project is subject to this Agreement or another agreement between the RIPTA and FTA, or an agreement involving a principal, officer, employee, agent, or Third-Party Participant of the RIPTA. It also applies to subcontractors at any tier. Knowledge, as used in this paragraph, includes, but is not limited to, knowledge of a criminal or civil investigation by a Federal, state, or local law enforcement or other investigative agency, a criminal indictment or civil

complaint, or probable cause that could support a criminal indictment, or any other credible information in the possession of RIPTA In this paragraph, "promptly" means to refer information without delay and without change. This notification provision applies to all divisions of the RIPTA, including divisions tasked with law enforcement or investigatory functions. (c) Federal Interest in Recovery. The Federal Government retains the right to a proportionate share of any proceeds recovered from any third party, based on the percentage of the federal share for the Underlying Agreement. Notwithstanding the preceding sentence, RIPTA may return all liquidated damages it receives to its Award Budget for its Underlying Agreement rather than return the federal share of those liquidated damages to the Federal Government, provided that RIPTA receives FTA's prior written concurrence. (d) Enforcement. RIPTA must pursue its legal rights and remedies available under any third-party agreement or any federal, state, or local law or regulation.

VII. GENERAL PROVISIONS

A. Definitions:

As used throughout this Contract, the following terms shall have the meanings set forth below:

1. Authority

Authority means Rhode Island Public Transit Authority (RIPTA).

2. Contracting Manager

the person executing this Contract on behalf of the Authority, and his or her successor, and the term includes, except as otherwise provided in this Contract, the authorized representative of a Contracting Officer acting within the limits of his authority.

3. Directed, Ordered, designated, or prescribed.

Wherever in the scope of the work the words directed, ordered, designated, prescribed, or words of like importance are used, it shall be understood that the direction, requirement, order, designation, or prescription of the Contracting Manager is intended and similarly the words approved, acceptable, satisfactory, or words of like importance shall mean approved by, or acceptable to, satisfactory to the Contracting Officer, unless expressly stated.

B. Changes:

The Contracting Officer may at any time, by a written order, and without notice to the sureties, make changes within the general scope of this Contract. If any such changes cause an increase or decrease in the cost of, or the time required for, the performance of any part of the work under this Contract, whether changed or not changed by the order, the Contracting officer shall make an equitable adjustment in the Contract price, the delivery schedule, or both, and shall modify the Contract.

The Contractor must assert its right to an adjustment under this article within 30 days from the date of receipt of the written order. Failure to agree to any adjustment shall be a dispute under the Disputes article. However, nothing in this article shall excuse the Contractor from proceeding with the contract as changed.

C. Extras:

Except as otherwise provided in this Contract, no payment for extras shall be made unless such extras and the price therefore have been authorized in writing in advance by the Contracting Officer.

D. Inspection:

All supplies, which term throughout this article includes without limitation raw materials, components, intermediate assemblies, and end products, shall be subject to inspection and test by the Authority, to the extent practicable at all times and places including the period of manufacture, and in any event prior to acceptance.

In case any supplies or lots of supplies are defective in material or workmanship or otherwise not in conformity within the requirements of this Contract, the Authority shall have the right either to reject them or require their correction. If any inspection or test is made by the Authority on the premises of the Contractor or a subcontractor, the Contractor without additional charge shall provide all reasonable facilities and assistance for the safety and convenience of the Authority inspectors in the performance of their duties.

All inspections and tests by the Authority shall be performed in such a manner as not to unduly delay this work. The Authority reserves the right to charge to the Contractor any additional cost of Authority inspection and test when supplies are not ready at the time such inspection and test is requested by the Contractor or when re-inspection or retest is necessitated by prior rejection. Acceptance or rejection of the supplies shall be made as promptly as practicable after delivery, except as otherwise provided in this Contract; but failure to inspect and accept or reject supplies shall neither relieve the Contractor from responsibility for such supplies as are not in accordance with the contract requirements nor impose liability on the Authority, therefore. The inspection and test by the Authority of any supplies or lots thereof does not relieve the Contractor from any responsibility regarding defects or other failures to meet the Contract requirements, which may be discovered prior to acceptance. Except as otherwise provided in this Contract, acceptance shall be conclusive except as regard latent defects, fraud, or such gross mistakes as amount to fraud. The Contractor shall provide and maintain an inspection system acceptable to the Authority covering the supplies hereunder. Records of all inspection work by the Contractor shall be kept complete and available to the Authority during the performance of this Contract and for such longer period as may be specified elsewhere in this Contract.

E. Responsible:

Notwithstanding the requirements for any Authority inspection and test contained in Specifications applicable to this Contract, except where specialized inspections or tests are specified for performance solely by the Authority, the Contractor shall perform or have performed the inspections and tests required to substantiate that the supplies and services provided under the contract conform to the Drawing, Specifications and Contract requirements.

F. Title and Risk of Loss

Unless this Contract specifically provides for earlier passage of title, title to supplies covered by this Contract shall pass to the Authority upon formal acceptance. Unless this Contract specifically provides otherwise, risk of loss of or damage to supplies covered by this Contract shall remain with the Contractor, until acceptance by the Authority.

Notwithstanding the above, the risk of loss of or damage to supplies which so fail to conform to the Contract as to give a right of rejection shall remain with the Contractor until cure or acceptance, at which time the above shall apply.

G. Storage of Contractor Material on RIPTA Property

The Authority will not accept responsibility for any Contractor Material stored on RIPTA Property. It shall be the responsibility to provide a secure, method of storing their material on RIPTA Property.

H. Payments

The Contractor shall be paid, upon the submission of proper invoices or vouchers, the prices stipulated herein for supplies delivered and accepted or services rendered and accepted, less deductions, if any, as specified. The failure to perform may result in partial or full suspension of payment and/or process payment. The Authority's payment terms are 60 days after approval of an invoice unless otherwise negotiated.

I. Stop Work Order

The Contracting Manager may, at any time, by written order to the Contractor, require the Contractor to stop all, or part of the work called for by this Contract. Any such order shall be specifically identified as a STOP WORK ORDER issued pursuant to this article. Upon receipt of such an order, the Contractor shall forthwith comply with its terms and take all reasonable steps to minimize the incurrence of costs allocable to the work covered by the order during the period of work stoppage.

J. Disputes

1. Except as otherwise provided in this Contract, any dispute concerning a question of fact arising under this Contract which is not disposed of by agreement shall be decided by the Contracting Officer, who shall reduce his decision to writing and mail or otherwise furnish a copy thereof to the Contractor. The decision of the Contracting Officer shall be final and conclusive unless, within 30 days from the date of receipt of such copy, the Contractor mails or otherwise furnishes to the Contracting Officer a written appeal addressed to the Chief Executive

Officer. The decision of the Chief Executive Officer or his/her duly authorized representative for the determination of such appeals shall be final and conclusive unless determined by a court of competent jurisdiction to have been fraudulent, or capricious, or arbitrary, or so grossly erroneous as necessarily to imply bad faith or is not supported by substantial evidence. In connection with any appeal proceeding under this article, the Contractor shall be awarded an opportunity to be heard and to offer evidence in support of his appeal. Pending final decision of a dispute hereunder, the Contractor shall proceed diligently with the performance of the contract and in accordance with the Contracting Officer's decision.

2 This **DISPUTES** article does not preclude consideration of questions of law in connection with decisions provided for in paragraph a. above. Nothing in this Contract, however, shall be construed as making the final decisions of the General Manger of his/her representative on a question of law.

K. Default

1. The Authority may, subject to the provisions of paragraph b. below, by written notice of default to the Contractor, terminate the whole or any part of this Contract in any one of the following circumstances:
   a. If the Contractor fails to make delivery of the supplies or to satisfactorily perform the services within the time specified herein or any extension thereof; or
   b. If the Contractor fails to perform any of the other provisions of this Contractor, or so fails to make its terms, and in either of these two circumstances does not cure such failure within a period of 10 days (or such longer period of as the Contracting Officer may authorize in writing) after receipt of notice from the Contracting Officer specifying such failure
2. Default without the fault or negligence of the Contractor. Such causes may include, but are restricted to, acts of God or of the public enemy, acts of the Government in its sovereign capacity or the Authority in its contractual capacity, fires, floods, epidemics, quarantine restrictions, strikes, freight embargoes, and unusually severe weather; but in every case the failure to perform must be beyond the control and without the fault or negligence of the Contractor.
3. If the Contractor fails to deliver the supplies or satisfactorily perform the services within the time specified in this Contract, or any extension thereof, the actual damage to the Authority for the delay will be difficult or impossible to determine. Therefore in lieu of actual damages, the Contractor shall pay to the Authority as fixed, agreed, and liquidated damages for each calendar day of delay, the amount set forth elsewhere in this Contract. The Contractor shall not be charged with liquidated damages when the delay arises out of causes beyond the control and without the fault or negligence of the Contractor, and

in such event, subject to this DISPUTES article, the Contracting Officer shall ascertain the facts and extent of the delay and shall extend the time for performance of the contract when in his judgment the findings of fact justify an extension.

4. The rights and remedies of the Authority provided in this article shall not be exclusive and are in addition to any other rights and remedies provided by law or under this Contract.

L. Termination for Convenience of the Authority

The performance of work under this Contract may be terminated by the Authority in accordance with this article in whole, or from time to time in part, whenever the Contracting Officer shall determine that such termination is in the best interest of the Authority. Any such termination shall be affected by delivery to the Contractor of a Notice of Termination specifying the extent to which performance of work under the contract is terminated, and the date upon which such termination becomes effective.

After receipt of a Notice of Termination, the Contractor shall submit to the Contracting Officer his termination claim, in the form and with certification prescribed by the Contracting Officer. Such claims shall be submitted promptly by in no event later than one year from the effective date of termination. Upon failure of the Contractor to submit his termination claim within the time allowed, the Contracting Officer may, subject to any review required by the contracting agency's procedures in effect as of the date of execution of this Contract, determine, on the basis of information available to him, the amount, if any, due the Contractor by reason of the termination and shall thereupon pay to the Contractor the amount so determined.

In the event of the failure of the Contractor and the Contracting Officer to agree upon the whole amount to be paid the Contractor by reason of the termination of work pursuant to this article, the Contracting Officer shall, subject to any review by the contracting agency's procedures in effect as of the date of execution of this Contract, determine, on the basis of information available to him, the amount if any, due the Contractor by reason of the termination.

Costs claimed, agreed to , or determined pursuant to this paragraph shall be in accordance with the applicable with the applicable contract cost principles and procedures of the Federal Acquisition Regulations (48 CFR 31.1) in effect on the date of this Contract. The Contractor shall have the right to appeal, under the DISPUTES article of this Contract from any determination made by the Contracting Officer, except that, if the Contractor has failed to submit his claim within the time provided above and has failed to request extension of such time, he shall have no such right of appeal. Unless otherwise provided for in this Contract, or by applicable statue, the Contractor, from the effective

date of termination and for a period of three years after final settlement under this Contract, shall preserve and make available to the Authority at all reasonable times at the office of the Contractor but without direct charge to the Authority, all his books, records, documents, and other evidence bearing on the costs and expenses of the Contractor under this Contract and relating to the work terminated hereunder, or, to the extent approved by the Contracting Officer, photographs, micro photographs, or other authentic reproductions thereof.

M. Federal, State and Local Taxes

Except as may be otherwise provided in this Contract, the Contract price includes all applicable Federal, State, and Local taxed and duties. The Authority upon the request of the Contractor shall, without further liability, furnish evidence appropriate to establish exemption from any Federal, State, or Local tax.

N. Walsh-Healey Public Contracts Act

If this contract is for the manufacture or furnishing of materials, supplies articles, or equipment in an amount which exceeds or may exceeds or exceed $14,000 and is otherwise subject to the Walsh-Healey Public Contract Act, as amended (41 U.S.C. 34-35), there are hereby incorporated by reference all representations and stipulations required by said Act and regulations issued thereunder by the Secretary of Labor, such representations of the Secretary of Labor which are now or may hereafter be in effect.

O. Officials Not to Benefit

No member, officer, or employee of the Authority during his tenure or one year thereafter shall have any interest, direct or indirect, in this Contract or the proceeds thereof.

P. Covenant against Contingent Fees

The Contractor warrants that no person or selling agency has been employed or retained to solicit or secure this Contract upon an agreement or understanding for a commission, percentage, brokerage, or contingent fee, excepting bona fide employees or bona fide established commercial or selling agencies maintained by the Contractor for the purpose of securing business. For breach or violation of this warranty, the Authority shall have the right to annul this Contract without liability or in its discretion, to full amount of such commission, percentage, brokerage, or contingent fee.

Q. Notice to the Authority of Labor Disputes

Whenever the Contractor has knowledge that any or potential labor disputes is delaying or threatens to delay the timely performance of this Contract, the Contractor shall immediately give notice thereof, including all relevant information with respect thereto, to the Contracting Officer. The Contractor agrees to insert the substance of this clause, in any subcontract hereunder as to which a labor dispute may delay the timely performance of this Contract; except that each such subcontract shall provide that in the event its timely performance is delayed or threatened by delay by any actual or potential labor dispute, the subcontractor shall immediately notify his next higher tier

subcontractor, or the Contractor, as the case may be, of all relevant information with respect to such dispute.

R. Patent Indemnity

1. If the amount of this Contract is in excess of $10,000, the Contractor shall indemnify the Authority and its officers, agents, and employees against liability, including costs, for infringement of any United States letters patent arising out of the manufacture or delivery of supplies under this Contract.
2. In addition, if specifically requested by the Contracting Officer prior to execution of the Contract, a copy of the current license agreement and identification of applicable claims of specific patents shall be furnished.

S. Use of Trade Names

Any trade names used in this document are merely used for a point of reference. The Authority will consider submission of approved equals on any or all products specified. Use of trade names by the Authority bears no actual or implicit approval for the violation of any current or pending patents or copyrights.

T. Rights in Technical Data

1. The Authority shall have the right to use, duplicate or disclose technical data, which includes computer software, in whole or in part, in any manner and for any purpose whatsoever, and to have or permit others to do so:
   a. Any manuals, instructional materials prepared for installation, operation, maintenance, or training purposes.
   b. Technical data pertaining to end items, components or processes which were prepared for the purpose of identifying sources, size, configuration, mating and attachment characteristics, functional characteristics and performance requirements ("for, fit and function: data; e/g/ specification control drawing, catalog sheets, outline drawing; except that for computer software it means data identifying source, functional characteristics, and performance requirements but specifically excludes the source code, algorithm, process, formulae, and flow charts of the software);
   c. Other technical data which has been or is normally furnished without restriction by the Contractor or subcontractor.
   d. Other specifically described technical data, which the parties have agreed will be furnished without restriction.
2. The Authority shall have the right to use, duplicate, or disclose technical data other than that defined in paragraph a. in whole or in part, with the express limitation that such technical data shall not, without the written permission of the party furnishing such technical data, be.

a. released or disclosed in part by the Authority for manufacture, or
b. used in whole or in part by the Authority for manufacture, or
c. used by a party other than the Authority except for emergency repair or overhaul work only, by or for the Authority where the item or process concerned is not otherwise reasonably available to enable timely performance of the work; provided, that the release or disclosure thereof outside the Authority shall be made subject to a prohibition against further use, release, or disclosure.

3. Technical data provided in accordance with the provisions of paragraph b. shall be identified by a legend, which suitably recites the aforesaid limitation. Nothing herein shall impair the right of the Authority to use similar or identical data acquired from other sources.
4. The term technical data as used in this article means technical writing, computer software, sound recording, pictorial reproductions, drawings, or other representations and works of a technical nature, whether or not copyrighted, which are specified to be delivered pursuant to this Contract. The term does not include financial reports, cost analysis, and other information incidental to Contract administration. Computer software as used in this article means computer programs, computer databases, and documentation.
5. Material covered by copyright:
   a. The Contractor agrees to and does hereby grant to the Authority, and to its officers, agents and employees acting within the scope of their official duties, a royalty-free, nonexclusive, and irrevocable license throughout the world for Authority purposes to publish, translate, reproduce, deliver, perform, dispose of, and to authorize others to do so, all technical data now or hereafter covered by copyright.
   b. No such copyright matter shall be included in technical data furnished hereunder without the written permission of the copyright owner for the Authority (or higher-tier contractor) promptly and in reasonable written detail each notice or claim of copyright infringement received by the Contractor with respect to any technical data delivered hereunder.
6. Relation to patents: Nothing contained in this article shall imply a license to the Authority under any patent or be construed as affecting the scope of any license or other right otherwise granted to the Authority under any patent.
7. Any dispute under this article shall be subject to the Disputes article of this contract

U. Audit and Inspection of Records

The Contractor shall maintain records, and the Contracting Officer, the State of Rhode Island, the U.S. Department of Transportation, and the Comptroller

General of the United States or any of their duly authorized representatives shall, until the expiration of three years after final payment under this Contract, have access to and the right to examine any directly pertinent books, documents, papers and records of such contractor, involving transactions related to the Contract, for the purpose of making audit, examination, excerpts and transactions.

The Contractor further agrees to include in all his subcontracts hereunder a provision to the effect that the subcontractor agrees that the Contracting Officer, the State of Rhode Island, the U.S. Department of Transportation and the Comptroller General of the United States or any of their Duly authorized representatives shall, until the expiration of three years after final payment under the Contract, have access to and the right to examine any directly pertinent books, documents, papers and records of such subcontractor, involving transactions related to the subcontract, for the purpose of making audit, examination, excerpts and transcription.

V. Gratuities

In connection with performance of work required under this Contract, or any changes or modifications relative thereto, the giving of or offering to give gratuities (in the form of entertainment, gifts or otherwise) by the Contractor, or any agent, representative or other person deemed to be acting on behalf of the Contractor, or any supplier or subcontractor furnishing material to or performing work under this Contract, or agent, representative or other person deemed to be acting on behalf of such supplier or subcontractor, to any Director, Officer or employee of the Authority; or to any Director, employee or agent of any of the Authority's agents, consultants, representatives or other persons deemed to be acting for or on behalf of the Authority with a view toward securing a contract or securing favorable treatment with respect to the awarding to the awarding or amending, or the making of any determinations with respect to the performing of such contract is expressly forbidden. The terms of this GRATUITIES article shall be strictly construed and enforced in the event of violations hereto.

W. Limitation on Withholding Payments

If more than one article or schedule provision of this Contract authorized the temporary withholding of amounts otherwise payable to the Contractor for supplies delivered or services performed, the total of the amounts so withheld at any one time shall not exceed the greatest amount which may be withheld under any one such article or schedule provision at that time; provided, that this limitation shall not apply to:

1. Withholdings pursuant to any clause relating to wages or hours of employees.
2. Withholdings not specifically provided for by this Contract; and
3. The recovery of overpayment.

X. New Material

The Contractor represents that the supplies and components to be provided under this Contract are new (not used or reconditioned, and not of such age or so deteriorated as to impair their usefulness or safety).

Y. Order of Precedence

In the event of an inconsistency in the Contract, unless otherwise provided herein, the inconsistency shall be resolved by giving precedence in the following order:

1. The Proposal Schedule.
2. Special Conditions.
3. General Provisions.
4. The other provisions of the Contract, whether incorporated by reference or otherwise.
5. The Specifications; and
6. Drawings.

Z. Correction of Deficiencies

1. Definitions:

As used in this article:

a. Deficiency means any condition or characteristics in any supplies (which term shall include related technical data) or services furnished hereunder, which is not in compliance with the requirements of this Contract.

b. Correction means any and all actions necessary to eliminate any and all deficiencies.

c. Supplies mean the end item(s) furnished by the Contractor and related services required under this Contract.

2. General:

a. The rights and remedies of the Authority shall not be affected in any way by any other provisions under this Contract concerning the conclusiveness of inspection and acceptance.

b. The Contractor shall not be responsible under this article for the correction of deficiencies caused by the Authority. These shall be no extension in time for performance; no increase in contract price for the correction of deficiencies that are the responsibility of the Contractor, his suppliers, and/or subcontractors.

3. Deficiencies in accepted supplies or services:

If the Contracting Officer determines that a deficiency exists in any of the supplies or services accepted by the Authority under this Contract, he shall promptly notify the Contractor of the deficiency, in writing, within 30 days. Upon timely notification of the existence of such a deficiency, or if the Contractor independently discovers a deficiency in accepted supplies or services, the Contractor shall promptly submit to the Contracting Officer his recommendation for corrective actions, together with supporting information in sufficient detail for the

Contracting Officer to determine what corrective action, if any, shall be undertaken.

4. Correction of Deficiencies by Contractor:

The Contractor shall promptly comply with any timely written direction by the Contracting Officer to correct or partially correct a deficiency, at no increase in the Contract price. The Contractor shall also prepare and furnish to the Authority data and reports applicable to any correction required under this article (including revision and updating of all other affected data called for under this Contract) at no increase in the Contract price.

5. Deficiencies in supplies or services not yet accepted:

If the Contractor becomes aware at any time before acceptance by the Authority (whether before or after tender to the Authority) that a deficiency exists in any supplies or services, he shall promptly correct the deficiency or, if he elects to invoke the procedures in paragraph c. above, he shall promptly communicate information concerning the deficiency to the Contracting Officer, in writing, together with his detailed recommendation for corrective action.

6. Extensions or Delays

In no event shall the Authority be responsible for extension or delays in the scheduled deliveries or periods of performance under this Contract as a result of the Contractor's obligations to correct deficiencies, nor shall there be any adjustment of delivery schedule or period of performance as a result of corrections of deficiencies, except as may be agreed to by the Authority in a supplemental agreement with adequate consideration.

7. Contract Price

It is hereby specifically recognized and agreed by the parties hereto that this article shall not be construed as obligating the Authority to increase the Contract price of this Contract.

8. Failure to correct:

If the Contractor fails or refuses to promptly rectify the deficiency the Contracting Officer shall give the Contractor written notice specifying the failure or refusal and setting a period after receipt of the notice within which it must be cured. If the failure or refusal is not cured within the specified period, the Contracting Officer may, by contract or otherwise, as required:

a. Obtain detailed recommendations for corrective action.
b. Correct the supplies or services, or
c. Replace the supplies or services; and if the Contractor fails to furnish timely disposition instructions, the Contracting Officer may dispose of nonconforming supplies for the Contractor’s account in a reasonable manner, in which case the Authority is entitled to reimbursement from the Contractor or from the

proceeds for the reasonable expenses of case and disposition, as well as for excess costs incurred or to be incurred; and

d. Obtain applicable data and reports; and charge to the Contractor the cost occasioned the Authority thereby.

e. Impose Liquidated Damages in accordance the terms of this document.

f. Terminate the contract. Termination of contract by RIPTA does not relieve the contractor of any liquidated damages imposed by the Authority.

AA. Assignment

1. The Contractor shall not transfer the rights and obligations of the Contract to third parties without the prior written approval of the Authority's Contracting Officer. After review of facts and circumstances without exception, the assignment shall not be approved unless the surety, in writing, agrees to that assignment and accepts the assignee as the Contractor and principal on the payment and/or performance bonds.
2. If this Contract provides for payments aggregating $1,000 or more, claims for monies due or to become due the Contractor from the Authority under this Contract may be assigned to a bank, trust company, or other financing institution, including any Federal lending agency, any may thereafter by further assigned and reassigned to any institution. (Notice of such assignment shall be made to the Authority.) Any such assignment or reassignment shall cover all amounts payable under this Contract and not already paid and shall not be made to more than one party, except that any such assignment or reassignment or reassignment may be made to one party as agent or trustee for two or more parties participating in such financing. It is the Authority's intent to recognize only bona fide lending institutions, therefore, assignment to any private corporation, business or individual, which does not qualify as such, is specifically prohibited.
3. Any attempt to transfer by assignment not authorized by this article shall constitute a breach of the Contract and the Authority may for such cause terminate the right of the Contractor to proceed as provided in the DEFAULT article of these General Provisions, and the Contractor and his sureties shall be liable to the Authority for any excess costs incurred by the Authority.
4. The Rhode Island Public Transit Authority may assign some or all of its rights to purchase the items specified in this contract to one or more third parties, provided, however, that nay such assignment shall not relieve RIPTA of its obligations under this contract unless otherwise agreed to by Contractor in writing.

BB. Certificates of Current Cost or Pricing Data

The Contractor shall provide a Certificate of Current Cost or Pricing Data as required in Subpart 15.804 of the Federal Acquisition Regulations (48 CFR 15.804) in support of any negotiated contract expected to exceed $100,000 any modification to a formally advertised or negotiated contract on which the aggregate of the increase and decrease in cost are expected to exceed $100,000; the Contracting Officer at his discretion may request cost or pricing data for modifications on which cost are $100,000 or less and an attendant certificate of current cost or pricing data.

CC. Cargo Preference

Use of United States Flag Vessels

Pursuant to Pub. L 664 (56 U.S.C. 1241 (b)):

"Cargo Preference-Use of United States-Flag Vessels

The Contractor agrees.

1. To utilize privately owned United States-flag commercial vessels to ship at least 50 percent of the gross tonnage (computed separately for dry bulk cargo liners, and tankers) involved, whenever shipping any equipment, materials, or commodities pursuant to this Contract, to the extent such vessels are available at fair and reasonable rates for United States-flag commercial vessels.
2. To furnish within 20 days following the date of loading for shipments originating within the United States, or within 30 working days following the date of loading for shipments originating outside the United States, a legible copy of a rated, "on-board" commercial ocean bill-of-lading in English for each shipment of cargo described in paragraph (1) above to the Grantee (through the prime Contractor in the care of subcontractor bills-of lading) and to the Division of National Cargo, Officer of Market Development, Maritime Administration, Washington, D.C. 20230, marked with appropriate identification of the Project.
3. To insert the substance of the provisions of this clause in all subcontracts issued pursuant to this Contract.

DD. Buy America Act

The Contractor agrees to comply with 49 U.S.C. §533(j), and its implementing regulations at 49 C.F.R. Part 661, any amendments thereto, and any implementing guidelines issued by FTA.

“Construction materials used in projects are subject to the domestic preference requirement of the Build America, Buy America Act, Pub. L. 117-58, div. G, tit. IX, 70911 70927 (2021), as implemented by the U.S. Office of Management and Budget, the U.S. Department of Transportation, and FTA. The Recipient acknowledges that this agreement is neither a waiver of 70914(a) nor a finding under 70914(b).”

EE. Equal Opportunity

1. **Race, Color, Creed, National Origin, Sex.**
   In accordance with Title VII of the Civil Rights Act, as amended, 42 U.S.C. § 2000e, and Federal transit laws at 49 U.S.C. § 5332, the Contractor agrees to comply with all applicable equal employment opportunity requirements of U.S. Department of Labor (U.S. DOL) regulations, " Office of Federal Contract Compliance Programs, Equal Employment Opportunity, Department of Labor," 41 CFR Parts 60 et seq., (which implements Executive Order No. 11246, "Equal Employment Opportunity," as amended by Executive Order No. 11375, "Amending Executive Order 11246 Relating to Equal Employment Opportunity," 42 U.S.C. § 2000e note), and with any applicable Federal statutes, executive orders regulations, and Federal policies that may in the future affect construction activities undertaken in the course of the Project. The Contractor agrees to take affirmative action to ensure that applicants are employed, and that employees are treated during employment, without regard to their race, color religion, sex, or national origin. Such action shall include, but not be limited to, the following: employment, promotion, demotion or transfer, recruitment or recruitment advertising, layoff, or termination; rates of pay or other forms of compensation; and selection for training, including apprenticeship. In addition, the Contractor agrees to comply with any implementing requirements FTA may issue.
2. **Age**
   In accordance with section 4 of the Age Discrimination in Employment Act of 1967, as amended, 29, U.S.C. § 623 and Federal Transit Law at 49 U.S.C. § 5332, the Contractor agrees to refrain from discrimination against present and prospective employees for reason of age. In addition, the Contractor agrees to comply with any implementing requirements FTA may issue.
3. **Disabilities**
   In accordance with section 102 of the Americans with Disabilities Act, as amended, 42 U.S.C. § 12112, the Contractor agrees that it will comply with the requirements of U.S. Equal Employment Opportunity Commission, "Regulations to Implement the Equal Employment Provisions of the Americans with Disabilities Act," 29 CFR Part 1630, pertaining to employment of persons with disabilities. In addition, the Contractor agrees to comply with any implementing requirements FTA may issue.

The contractor also agrees to include these requirements in each subcontract financed in whole or in part with Federal assistance provided by FTA, modified only if necessary to identify the affected parties.

FF. Nondiscrimination under Federal Grants

In accordance with Title VI of the Civil Rights Act, as amended, 42 U.S.C. §2000d, section 303 of the Age Discrimination Act of 1975, as amended, 42 U.S.C. §6102, section 202 of the Americans with Disabilities Act of 1990, 42

U.S.C. § 12132, and Federal transit law at 49 U.S.C. § 5332, the Contractor agrees that it shall not discriminate against any employee or applicant for employment because of race, color,, religion, age, national origin, sexual orientation, disability, gender identity or expression or veteran status. In addition, the Contractor agrees to comply with applicable Federal implementing regulations and other implementing requirements FTA may issue.

GG. Rights in Data and Copyrights-FTA (June 1996)

The term "subject data" used in this section means recorded information, whether or not copyrighted, that is delivered or specified to be delivered under this contract. The term includes graphic or pictorial delineation in media such as drawings or photographs; text in specifications or related performance or design-type documents; machine forms such as punched cards, magnetic tape, or computer memory printouts; and information retained in computer memory. Examples include, but are not limited to computer software, engineering drawings and associated lists, specifications, standards, process sheets, manuals, technical reports, catalog item identifications, and related information. The term "subject data" does not include financial reports, cost analyses, and similar information incidental to Project administration.

When the Federal Transit Administration (FTA) provides financial assistance for a planning, research, development, or a demonstration project, it is FTA's general intention to increase mass transportation knowledge, rather than limit the benefits of the Project to participants in the Project. Therefore, unless FTA determines otherwise, the Contractor agrees that FTA may make available to any FTA recipient, sub-recipient, third party contractor, or third-party subcontractor, either FTA's license in the copyright to the subject data derived under this contract or a copy of the subject data as defined in subsection a. of this clause and shall be delivered as the Government may direct. Unless prohibited by state law, the Contractor agrees to indemnify, save, and hold harmless RIPTA and the Government, their officers, agents, and employees acting within the scope of their official duties against any liability, including costs and expenses, resulting from any willful or intentional violation by the contractor of proprietary rights, copyrights, or right of privacy, arising out of the publication, translation, reproduction, delivery, use, or disposition of any data furnished under this Contract. The Contractor shall not be required to indemnify RIPTA and the Government for any such liability arising out of the wrongful acts of employees or agents of RIPTA and the Government.

HH. Davis-Bacon Act

40 USC &167; 276a -276a-5 (1998) 29 CFR § 5 (1999)

1. Minimum wages

a. All laborers and mechanics employed or working upon the site of the work (or under the United States Housing Act of 1937 or

under the Housing Act of 1949 in the construction or development of the project), will be paid unconditionally and not less often than once a week, and without subsequent deduction or rebate on any account (except such payroll deductions as are permitted by regulations issued by the Secretary of Labor under the Copeland Act (29 CFR part 3)), the full amount of wages and bona fide fringe benefits (or cash equivalents thereof) due at time of payment computed at rates not less than those contained in the wage determination of the Secretary of Labor which is attached hereto and made a part hereof, regardless of any contractual relationship which may be alleged to exist between the contractor and such laborers and mechanics.

Contributions made or costs reasonably anticipated for bona fide fringe benefits under section 1(b)(2) of the Davis-Bacon Act on behalf of laborers or mechanics are considered wages paid to such laborers or mechanics, subject to the provisions of paragraph (1)(iv) of this section; also, regular contributions made or costs incurred for more than a weekly period (but not less often than quarterly) under plans, funds, or programs which cover the particular weekly period, are deemed to be constructively made or incurred during such weekly period. Such laborers and mechanics shall be paid the appropriate wage rate and fringe benefits on the wage determination for the classification of work actually performed, without regard to skill, except as provided in 29 CFR Part 5.5(a)(4). Laborers or mechanics performing work in more than one classification may be compensated at the rate specified for each classification for the time actually worked therein: Provided that the employer's payroll records accurately set forth, the time spent in each classification in which work is performed. The wage determination and the Davis-Bacon poster (WH-1321) shall be posted at all times by the contractor and its subcontractors at the site of the work in a prominent and accessible place where it can be easily seen by the workers.

b. The contracting officer shall require that any class of laborers or mechanics, including helpers, which is not listed in the wage determination, and which is to be employed under the contract shall be classified in conformance with the wage determination. The contracting officer shall approve an additional classification and wage rate and fringe benefits therefore only when the following criteria have been met:

   i. Except with respect to helpers as defined as 29 CFR 5.2(n)(4), the work to be performed by the classification

requested is not performed by a classification in the wage determination; and

ii. The classification is utilized in the area by the construction industry; and

iii. The proposed wage rate, including any bona fide fringe benefits, bears a reasonable relationship to the wage rates contained in the wage determination; and

iv. With respect to helpers as defined in 29 CFR 5.2(n) (4), such a classification prevails in the area in which the work is performed.

c. If the contractor and the laborers and mechanics to be employed in the classification (if known), or their representatives, and the contracting officer agree on the classification and wage rate (including the amount designated for fringe benefits where appropriate), a report of the action taken shall be sent by the contracting officer to the Administrator of the Wage and Hour Division, Employment Standards Administration, U.S. Department of Labor, Washington, DC 20210. The Administrator, or an authorized representative, will approve, modify, or disapprove every additional classification action within 30 days of receipt and so advise the contracting officer or will notify the contracting officer within the 30-day period that additional time is necessary.

d. In the event the contractor, the laborers, or mechanics to be employed in the classification or their representatives, and the contracting officer do not agree on the proposed classification and wage rate (including the amount designated for fringe benefits, where appropriate), the contracting officer shall refer the questions, including the views of all interested parties and the recommendation of the contracting officer, to the Administrator for determination. The Administrator, or an authorized representative, will issue a determination within 30 days of receipt and so advise the contracting officer or will notify the contracting officer within the 30-day period that additional time is necessary.

e. The wage rate (including fringe benefits where appropriate) determined pursuant to paragraphs (a)(1)(ii) (B) or (C) of this section, shall be paid to all workers performing work in the classification under this contract from the first day on which work is performed in the classification.

f. Whenever the minimum wage rate prescribed in the contract for a class of laborers or mechanics includes a fringe benefit, which is not expressed as an hourly rate, the contractor shall either pay the benefit as stated in the wage determination or

shall pay another bona fide fringe benefit or an hourly cash equivalent thereof.

g. If the contractor does not make payments to a trustee or other third person, the contractor may consider as part of the wages of any laborer or mechanic the amount of any costs reasonably anticipated in providing bona fide fringe benefits under a plan or program, Provided, That the Secretary of Labor has found, upon the written request of the contractor, that the applicable standards of the Davis-Bacon Act have been met. The Secretary of Labor may require the contractor to set aside in a separate account asset for the meeting of obligations under the plan or program.

h. The contracting officer shall require that any class of laborers or mechanics which is not listed in the wage determination, and which is to be employed under the contract shall be classified in conformance with the wage determination. The contracting officer shall approve an additional classification and wage rate and fringe benefits therefore only when the following criteria have been met:

   i. The work to be performed by the classification requested is not performed by a classification in the wage determination; and

   ii. The classification is utilized in the area by the construction industry; and

   iii. The proposed wage rate, including any bona fide fringe benefits, bears a reasonable relationship to the wage rates contained in the wage determination.

i. If the contractor and the laborers and mechanics to be employed in the classification (if known), or their representatives, and the contracting officer agree on the classification and wage rate (including the amount designated for fringe benefits where appropriate), a report of the action taken shall be sent by the contracting officer to the Administrator of the Wage and Hour Division, Employment Standards Administration, Washington, DC 20210. The Administrator, or an authorized representative, will approve, modify, or disapprove every additional classification action within 30 days of receipt and so advise the contracting officer or will notify the contracting officer within the 30-day period that additional time is necessary.

j. In the event the contractor, the laborers, or mechanics to be employed in the classification or their representatives, and the contracting officer do not agree on the proposed classification and wage rate (including the amount designated for fringe benefits, where appropriate), the contracting officer shall refer

the questions, including the views of all interested parties and the recommendation of the contracting officer, to the Administrator for determination. The Administrator, or an authorized representative, will issue a determination with 30 days of receipt and so advise the contracting officer or will notify the contracting officer within the 30-day period that additional time is necessary.

k. The wage rate (including fringe benefits where appropriate) determined pursuant to paragraphs (a)(1)(v) (B) or (C) of this section, shall be paid to all workers performing work in the classification under this contract from the first day on which work is performed in the classification.

2. Withholding

The Rhode Island Public Transit Authority shall upon its own action or upon written request of an authorized representative of the Department of Labor withhold or cause to be withheld from the contractor under this contract or any other Federal contract with the same prime contractor, or any other federally-assisted contract subject to Davis-Bacon prevailing wage requirements, which is held by the same prime contractor, so much of the accrued payments or advances as may be considered necessary to pay laborers and mechanics, including apprentices, trainees, and helpers, employed by the contractor or any subcontractor the full amount of wages required by the contract. In the event of failure to pay any laborer or mechanic, including any apprentice, trainee, or helper, employed or working on the site of the work (or under the United States Housing Act of 1937 or under the Housing Act of 1949 in the Rhode Island Public Transit Authority may, after written notice to the contractor, sponsor, applicant, or owner, take such action as may be necessary to cause the suspension of any further payment, advance, or guarantee of funds until such violations have ceased.

3. Payrolls and basic records

a. Payrolls and basic records relating thereto shall be maintained by the contractor during the course of the work and preserved for a period of three years thereafter for all laborers and mechanics working at the site of the work (or under the United States Housing Act of 1937, or under the Housing Act of 1949, in the construction or development of the project). Such records shall contain the name, address, and social security number of each such worker, his or her correct classification, hourly rates of wages paid (including rates of contributions or costs anticipated for bona fide fringe benefits or cash equivalents thereof of the types described in section 1(b) (2) (B) of the Davis-Bacon Act), daily and weekly number of hours worked, deductions made, and actual wages paid. Whenever

the Secretary of Labor has found under 29 CFR 5.5(a)(1)(iv) that the wages of any laborer or mechanic include the amount of any costs reasonably anticipated in providing benefits under a plan or program described in section 1(b)(2)(B) of the Davis-Bacon Act, the contractor shall maintain records which show that the commitment to provide such benefits is enforceable, that the plan or program is financially responsible, and that the plan or program has been communicated in writing to the laborers or mechanics affected, and records which show the costs anticipated or the actual cost incurred in providing such benefits. Contractors employing apprentices or trainees under approved programs shall maintain written evidence of the registration of apprenticeship programs and certification of trainee programs, the registration of the apprentices and trainees, and the ratios and wage rates prescribed in the applicable programs.

b. i. The contractor shall submit weekly for each week in which any contract work is performed a copy of all payrolls to the Rhode Island Public Transit Authority for transmission to the Federal Transit Administration. The payrolls submitted shall set out accurately and completely all of the information required to be maintained under 29 CFR part 5. This information may be submitted in any form desired. Optional Form WH-347 is available for this purpose and may be purchased from the Superintendent of Documents (Federal Stock Number 029-005-00014-1), U.S. Government Printing Office, Washington, DC 20402. The prime contractor is responsible for the submission of copies of payrolls by all subcontractors.

ii. Each payroll submitted shall be accompanied by a "Statement of Compliance," signed by the contractor or subcontractor or his or her agent who pays or supervises the payment of the persons employed under the contract and shall certify the following:

(1) That the payroll for the payroll period contains the information required to be maintained under 29 CFR part 5 and that such information is correct and complete.

(2) That each laborer or mechanic (including each helper, apprentice, and trainee) employed on the contract during the payroll period has been paid the full weekly wages earned, without rebate, either directly or indirectly, and that no deductions have been made either directly or indirectly from the full wages earned,

other than permissible deductions as set forth in Regulations, 29 CFR part 3.
(3) That each laborer or mechanic has been paid not less than the applicable wage rates and fringe benefits or cash equivalents for the classification of work performed, as specified in the applicable wage determination incorporated into the contract.

c. The weekly submission of a properly executed certification set forth on the reverse side of Optional Form WH-347 shall satisfy the requirement for submission of the "Statement of Compliance" required by paragraph (a)(3)(ii)(B) of this section.

d. The falsification of any of the above certifications may subject the contractor or subcontractor to civil or criminal prosecution under section 1001 of title 18 and section 231 of title 31 of the United States Code.

The contractor or subcontractor shall make the records required under paragraph (a)(3)(i) of this section available for inspection, copying, or transcription by authorized representatives of the Federal Transit Administration or the Department of Labor, and shall permit such representatives to interview employees during working hours on the job. If the contractor or subcontractor fails to submit the required records or to make them available, the Federal agency may, after written notice to the contractor, sponsor, applicant, or owner, take such action as may be necessary to cause the suspension of any further payment, advance, or guarantee of funds. Furthermore, failure to submit the required records upon request or to make such records available may be grounds for debarment action pursuant to 29 CFR 5.12.

4. Apprentices and trainees

a. Apprentices - Apprentices will be permitted to work at less than the predetermined rate for the work they performed when they are employed pursuant to and individually registered in a bona fide apprenticeship program registered with the U.S. Department of Labor, Employment and Training Administration, Bureau of Apprenticeship and Training, or with a State Apprenticeship Agency recognized by the Bureau, or if a person is employed in his or her first 90 days of probationary employment as an apprentice in such an apprenticeship program, who is not individually registered in the program, but who has been certified by the Bureau of Apprenticeship and Training or a State Apprenticeship Agency (where appropriate) to be eligible for probationary employment as an apprentice. The allowable ratio of apprentices to journeymen on the job

site in any craft classification shall not be greater than the ratio permitted to the contractor as to the entire work force under the registered program. Any worker listed on a payroll at an apprentice wage rate, who is not registered or otherwise employed as stated above, shall be paid not less than the applicable wage rate on the wage determination for the classification of work actually performed. In addition, any apprentice performing work on the job site in excess of the ratio permitted under the registered program shall be paid not less than the applicable wage rate on the wage determination for the work actually performed. Where a contractor is performing construction on a project in a locality other than that in which its program is registered, the ratios and wage rates (expressed in percentages of the journeyman's hourly rate) specified in the contractor's or subcontractor's registered program shall be observed. Every apprentice must be paid at not less than the rate specified in the registered program for the apprentice's level of progress, expressed as a percentage of the journeymen hourly rate specified in the applicable wage determination. Apprentices shall be paid fringe benefits in accordance with the provisions of the apprenticeship program. If the apprenticeship program does not specify fringe benefits, apprentices must be paid the full amount of fringe benefits listed on the wage determination for the applicable classification. If the Administrator of the Wage and Hour Division of the U.S. Department of Labor determines that a different practice prevails for the applicable apprentice classification, fringes shall be paid in accordance with that determination. In the event the Bureau of Apprenticeship and Training, or a State Apprenticeship Agency recognized by the Bureau, withdraws approval of an apprenticeship program, the contractor will no longer be permitted to utilize apprentices at less than the applicable predetermined rate for the work performed until an acceptable program is approved.

b. Trainees - Except as provided in 29 CFR 5.16, trainees will not be permitted to work at less than the predetermined rate for the work performed unless they are employed pursuant to and individually registered in a program which has received prior approval, evidenced by formal certification by the U.S. Department of Labor, Employment and Training Administration. The ratio of trainees to journeymen on the job site shall not be greater than permitted under the plan approved by the Employment and Training Administration. Every trainee must be paid at not less than the rate specified in the approved program for the trainee's level of progress,

expressed as a percentage of the journeyman hourly rate specified in the applicable wage determination. Trainees shall be paid fringe benefits in accordance with the provisions of the trainee program. If the trainee program does not mention fringe benefits, trainees shall be paid the full amount of fringe benefits listed on the wage determination unless the Administrator of the Wage and Hour Division determines that there is an apprenticeship program associated with the corresponding journeyman wage rate on the wage determination which provides for less than full fringe benefits for apprentices. Any employee listed on the payroll at a trainee rate who is not registered and participating in a training plan approved by the Employment and Training Administration shall be paid not less than the applicable wage rate on the wage determination for the classification of work actually performed. In addition, any trainee performing work on the job site in excess of the ratio permitted under the registered program shall be paid not less than the applicable wage rate on the wage determination for the work actually performed. In the event the Employment and Training Administration withdraws approval of a training program, the contractor will no longer be permitted to utilize trainees at less than the applicable predetermined rate for the work performed until an acceptable program is approved.

c. Equal employment opportunity - The utilization of apprentices, trainees and journeymen under this part shall be in conformity with the equal employment opportunity requirements of Executive Order 11246, as amended and 29 CFR part 30.

5. Compliance with Copeland Act requirements

The contractor shall comply with the requirements of 29 CFR part 3, which are incorporated by reference in this contract.

6. Subcontracts

The contractor or subcontractor shall insert in any subcontracts the clauses contained in 29 CFR 5.5(a)(1) through (10) and such other clauses as the Federal Transit Administration may by appropriate instructions require, and also a clause requiring the subcontractors to include these clauses in any lower tier subcontracts. The prime contractor shall be responsible for the compliance by any subcontractor or lower tier subcontractor with all the contract clauses in 29 CFR 5.5.

7. Contract termination: debarment

A breach of the contract clauses in 29 CFR 5.5 may be grounds for termination of the contract, and for debarment as a contractor and a subcontractor as provided in 29 CFR 5.12.

8. Compliance with Davis-Bacon and related Act requirements

All rulings and interpretations of the Davis-Bacon and Related Acts contained in 29 CFR parts 1, 3, and 5 are herein incorporated by reference in this contract.

9. Disputes concerning labor standards.

Disputes arising out of the labor standards provisions of this contract shall not be subject to the general disputes clause of this contract. Such disputes shall be resolved in accordance with the procedures of the Department of Labor set forth in 29 CFR parts 5, 6, and 7. Disputes within the meaning of this clause include disputes between the contractor (or any of its subcontractors) and the contracting agency, the U.S. Department of Labor, or the employees or their representatives.

10. Certification of eligibility.

a. By entering into this contract, the contractor certifies that neither it (nor he or she) nor any person or firm who has an interest in the contractor's firm is a person or firm ineligible to be awarded Government contracts by virtue of section 3(a) of the Davis-Bacon Act or 29 CFR 5.12(a)(1).

b. No part of this contract shall be subcontracted to any person or firm ineligible for award of a Government contract by virtue of section 3(a) of the Davis-Bacon Act or 29 CFR 5.12(a)(1).

c. The penalty for making false statements is prescribed in the U.S. Criminal Code, 18 U.S.C. 1001

II. Contract Work Hours and Safety Standards Act

40 U.S.C. 327-333 (1995) 29C.F.R. 5 (1995) 29 C.F.R. 1926 (1995)

1. Overtime requirements

No contractor or subcontractor contracting for any part of the contract work which may require or involve the employment of laborers or mechanics shall require or permit any such laborer or mechanic in any workweek in which he or she is employed on such to work in excess of forty hours in such workweek unless such laborers or mechanics receive compensation at a rate not less than one and one-half times the basic rate of pay for all hours worked in excess of forty hours in such workweek.

2. Violation; liability unpaid wages; liquidated damages

In the event of any violation of the clauses set forth in paragraph (1) of this section, the contractor, and any subcontractor responsible therefore shall be liable for the unpaid wages. In addition, such contractor and subcontractor shall be liable to the United States for liquidated damages. Such liquidated damages shall be computed with respect to each individual laborer or mechanic, including watchmen and guards, employed in violation of the clauses set forth in paragraph (1) of this section, in the sum of $10 for each calendar day on which

such individual was required or permitted to work in excess of the standard workweek of forty hours without payment of the overtime wages required by the clauses set forth in paragraph (1) of this section.

3. Withholding for unpaid wages; liquidated damages

The Rhode Island Public Transit Authority shall upon its own action or upon written request of an authorized representative of the Department of Labor withhold or cause to be withheld, from any moneys payable on account of work performed by the contractor or subcontractor under any such contract or any other Federal contract with the same prime contractor, or any other federally-assisted contract subject to the Contract Work Hours and Safety Standards Act, which is held by the same prime contractor, such sums as may be determined to be necessary to satisfy any liabilities of such contractor or subcontractor for unpaid wages and liquidated damages as provided in the clauses set forth in paragraph (2) of this section.

4. Subcontracts

The contractor or subcontractor shall insert in any subcontracts the clauses set forth in this section and also a clause requiring the subcontractors to include these clauses in any lower tier subcontracts. The prime contractor shall be responsible for compliance by any subcontractor or lower tier subcontractor with the clauses set forth in this section. (Section 102 non-construction contracts should also have the following provision :)

5. Payrolls and basic records

Payrolls and basic records relating theretoshall be maintained by the contractor during the course of the work and preserved for a period of three years thereafter for all laborers and mechanics working at the site of the work (or under the United States Housing Act of 1937, or under the Housing Act of 1949, in the construction or development of the project). Such records shall contain the nams, address, and social security number of each worker, his or her correct classification, hourly rates of wages paid (including rates of contributions or costs anticipated for bona fide fringe benefits or cash equivalents thereof of the types described in section 1(b) (2) (B) of the Davis-Bacon Act), daily and weekly number of hours worked, deductions. Whenever the made and actual wages paid Secreary iof labor has found under 29 CFR 5.5 (a)(1)(iv) that the wages of any laborer or mechanic included the amount of any costs reasonably anticipated in providing benefits under a plan or program described in section 1(b)(2)(B) of the Davis-Beacon Act, the contractor shall maintain records which show that the commitment to provide such benefits is enforceable, that the plan or program is financially responsible, and that the plan or program has been communicated in writing to the laborers or mechanics affected, and records which show the costs anticipated or the actual cost incurred in providing such benefits. Contractors employing

apprentices or trainees under approved programs shall maintain written evidence of the regisration of apprenticeship programs and certification of trainee programs, the registration of the apprentices and trainees, and the ratios and wage rates prescribed in the applicable programs.

6. Contract Work Hours and Safety Standards Act

The contractor agrees to comply with section 107 of the Contract Work Hours and Safety Standards Act, 40 U.S.C. section 333, and applicable DOL regulations, "Safety and Health Regulations for Construction" 29 C.F.R. Part 1926. Among other things, the Contractor agrees that it will not require any laborer of mechanic to work in unsanitary, hazardous, or dangerous surroundings or working conditions.

7. Subcontracts

The Contractor also agrees to include the requirements of the section in each. The term "subcontract" under this section is considered to refer to a person who agrees to perform any part of the labor or material requirements of a contract for construction, alteration, or repair. A person who undertakes to perform a portion of a contract involving the furnishing of supplies or materials will be considered a "subcontractor" under this section if the work in question involves the performance of construction work and is to be performed: (1) directly on or near the construction site, or (2) by the employer for the specific project on a customized basis. Thus, a supplier of materials, which will become an integral part of the construction, is a "subcontractor" if the supplier fabricates or assembles the goods or materials in question specifically for the construction project and the work involved may said to be construction activity. If goods or materials in question are ordinarily sold to other customers from regular inventory, the supplier is not a "subcontractor." The requirements of this section do not apply to contracts or subcontracts for the purchase of supplies or materials or articles normally available on the open market.

JJ. Seismic Safety Requirements

42 U.S.C. 7701 et seq. 49 CFR Part 41

The contractor agrees that any new building or addition to an existing building will be designed and constructed in accordance with the standards for Seismic Safety required in Department of Transportation Seismic Safety Regulations 49 CFR Part 41 and will certify to compliance to the extent required by the regulation. The contractor also agrees to ensure that all work performed under this contract including work performed by a subcontractor is in compliance with the standards required by the Seismic Safety Regulations and the certification of compliance issued on the project.

KK. Energy Conservation Requirements

42 U.S.C. 6321 et seq. 49 CFR Part 18

The contractor agrees to comply with mandatory standards and policies relating to energy efficiency, which are contained in the state energy conservation plan issued in compliance with the Energy Policy and Conservation Act.

LL. Clean Air

42 U.S.C. 7401 et Seq 40 CFR 15.61 49 CFR Part 18

1 The Contractor agrees to comply with all applicable standards, orders or regulations issued pursuant to the Clean Air Act, as amended, 42 U.S.C. §§ 7401 et Seq . The Contractor agrees to report each violation to the Purchaser and understands and agrees that the Purchaser will, in turn, report each violation as required to assure notification to FTA and the appropriate EPA Regional Office.

2. The Contractor also agrees to include these requirements in each subcontract exceeding $100,000 financed in whole or in part with Federal assistance provided by FTA.

MM. Clean Water

1 The Contractor agrees to comply with all applicable standards, orders or regulations issued pursuant to the Federal Water Pollution Control Act, as amended, 33 U.S.C. 1251 et Seq. The Contractor agrees to report each violation to the Purchaser and understands and agrees that the Purchaser will, in turn, report each violation as required to assure notification to FTA and the appropriate EPA Regional Office.

2 The Contractor also agrees to include these requirements in each subcontract exceeding $100,000 financed in whole or in part with Federal assistance provided by FTA.

NN. Recovered Materials

The contractor agrees to comply with all the requirements of Section 6002 of the Resource Conservation and Recovery Act (RCRA), as amended (42 U.S.C. 6962), including but not limited to the regulatory provisions of 40 CFR Part 247, and Executive Order 12873, as they apply to the procurement of the items designated in Subpart B of 40 CFR Part 247.

OO. Fly America Requirements

The Contractor agrees to comply with 49 U.S.C. 40118 (the "Fly America" Act) in accordance with the General Services Administration's regulations at 41 CFR Part 301-10, which provide that recipients and sub-recipients of Federal funds and their contractors are required to use U.S. Flag air carriers for U.S Government-financed international air travel and transportation of their personal effects or property, to the extent such service is available, unless travel by foreign air carrier is a matter of necessity, as defined by the Fly America Act. The Contractor shall submit, if a foreign air carrier was used, an appropriate certification or memorandum adequately explaining why service by a U.S. flag air carrier was not available or why it was necessary to use a foreign air carrier and shall, in any event, provide a certificate of compliance with the Fly America requirements. The Contractor agrees to include the

requirements of this section in all subcontracts that may involve international air transportation.

PP. National Intelligent Transportation Systems Architecture and Standards

The Contractor agrees to conform, to the extent applicable to the National Intelligent Transportation Systems (ITS) Architecture and Standards as required by section 5206(e) of TEA-21, 23 U.S.C. § 502 note, and comply with FTA Notice, "FTA National ITS Architecture Policy on Transit Projects" 66 Fed. Reg. 1455 *et seq*., January 8, 2001, and other Federal requirements that may be issued.

QQ. Federal Changes

Contractor shall at all times comply with all applicable FTA regulations, policies, procedures, and directives, including without limitation those listed directly or by reference in the Agreement (Form FTA MA (9) dated October 2002) between Purchaser and FTA , as they may be amended or promulgated from time to time during the term of this contract. Contractor's failure to so comply shall constitute a material breach of this contract.

RR. Incorporation of Federal Transit Administration (FTA) Terms

The preceding provisions include, in part, certain Standard Terms and Conditions required by DOT, whether or not expressly set forth in the preceding contract provisions. All contractual provisions required by DOT, as set forth in FTA Circular 4220.1F, dated November 1, 2008, are hereby incorporated by reference. Anything to the contrary herein notwithstanding, all FTA mandated terms shall be deemed to control in the event of a conflict with other provisions contained in this Agreement. The Contractor shall not perform any act, fail to perform any act, or refuse to comply with any (name of grantee) requests, which would cause (name of grantee) to be in violation of the FTA terms and conditions.

SS. Force Majeure

Neither Party will be liable for any failure or delay in performing an obligation under this Agreement that is due to any of the following causes, to the extent beyond its reasonable control: acts of God, accident, riots, war, terrorist act, government declared states of emergency, epidemic, pandemic, quarantine, civil commotion, breakdown of communication facilities, breakdown of web host, breakdown of internet service provider, natural catastrophes, governmental acts or omissions, changes in laws or regulations, national strikes, fire, explosion, generalized lack of availability of raw materials or energy and other events beyond its reasonable control, the effect of which, by the exercise of reasonable diligence, the non-performing party could not avoid. In the event that such failure or delay occurs, the affected Party shall notify the other Party of the occurrence thereof as soon as possible and the Parties shall discuss the best way to resolve the event of force.

Neither party shall, however, be excused from performance if nonperformance is due to forces which are preventable, removable, or remediable and which the non-performing party could have, with the exercise of reasonable diligence, prevented, removed, or remedied with reasonable dispatch. The non-performing party shall within a reasonable time of being prevented or delayed from performance by an uncontrollable force, give written notice to the other party describing the circumstances and uncontrollable forces preventing continued performance of the obligations of this Agreement. "

TT. Governing Law

The Contract shall be interpreted under, and its performance governed by the laws of the State of Rhode Island."

UU. Indemnification

Proposers shall indemnify and hold harmless, the State of Rhode Island, all departments and division thereof and the Rhode Island Public Transit Authority from all liability and said indemnification shall cover and include any and all aspects of liability arising from any lawsuit pertaining to the execution of this contract.

VV. Policy Concerning Federal and Stated False Claim Laws

As required by 42 U.S.C. §1396a(a)(68), the Rhode Island Public Transit Authority ("RIPTA") publishes the following information to all employees, contractors, and agents about federal and state False Claims laws and RIPTA's policies to detect and prevent fraud, waste, and abuse.

1. Prohibitions against False Claims

Federal False Claims Act

The federal False Claims Act, among other things, applies to the submission of claims for payment by Medicare, Medicaid, and other federal and state programs. The False Claims Act is the federal government's primary civil remedy for improper or fraudulent claims. It applies to all federal programs, including welfare and health care benefits.

2. Prohibitions of the Federal False Claims Act

The False Claims Act prohibits, among other things:

a knowingly presenting or causing to be presented to the federal government a false or fraudulent claim for payment or approval.

b knowingly making or using, or causing to be made or used, a false record or statement in order to have a false or fraudulent claim paid or approved by the government.

c conspiring to defraud the government by getting a false or fraudulent claim allowed or paid; and

d knowingly making or using, or causing to be made or used, a false record or statement to conceal, avoid, or decrease an obligation to pay or transmit money or property to the government.

"Knowingly" means that a person, with respect to information: (1) has actual knowledge of the information; (2) acts in deliberate ignorance of the truth or falsity of the information; or (3) acts in reckless disregard of the truth or falsity of the information and no proof of specific intent to defraud is required.

3. Enforcement

The United States Attorney General may bring civil actions for violations of the False Claims Act. As with most other civil actions, the government must establish its case by presenting only a preponderance of the evidence rather than by meeting the higher burden of proof that applies in criminal cases.

The False Claims Act allows private individuals to bring "qui tam" actions for violations of the Act.

WW. American with Disabilities Act

All products, equipment or construction provided in accordance with this contract shall comply with the current version of the Americans with Disabilities Act of 1990 - 42 U.S.C. 12101, et seq. at the time of the solicitation.

XX. Expense Reimbursement Professional Services Contracts

The following methods of Reimbursement of Expenses directly related to the performance of this contract shall be utilized. Any expenses incurred must be approved in writing by the RIPTA Project Manager before they occur. The vendor is responsible to submit sufficient documentation to allow the Authority to verify the expenses.

1. Automobile mileage

Travel mileage will be reimbursed at the rate approved by the Internal Revenue Service at the time the travel is. incurred.

2. Per Diem Expenses

Meals will be reimbursed at the rates established by the General Services administration for the City of Providence or Newport, which is applicable to the RIPTA Project. The applicable Per Diem rates can be found at the following website: **www.gsa.gov**

A copy of the printout of the GSA website documenting the applicable per diem rate must be attached to the invoice.

3. Lodging

Lodging will be reimbursed at the rates established by the General Services administration for the City of Providence or Newport, which is applicable to the RIPTA Project. The applicable Per Diem rates can be found at the following website: **www.gsa.gov** .

A copy of the printout of the GSA website documenting the applicable per diem rate must be attached to the invoice

4. **Miscellaneous Expenses**

Materials used in conjunctions with this contract shall be provided at cost plus the following (applicable) fee for Overhead, Pickup, and Delivery. No additional charges will be acceptable.

Material Cost	Overhead Fee
$0-500	No Fee
$501-750	$75.00
$751-1000	$100.00
$1001-1500	$125.00
$1501-$2500	$180.00
$2501-5000	$300.00
$5001-7500	$450.00
Over 7501.	$525.00

Copies of Receipts must be submitted to verify Miscellaneous Expenses

5. **Estimated Expenses**

Proposers are required to submit an accurate list of projected expenses that may be necessary to properly execute the Scope of Services of this Contract. This must be submitted with the Proposal submittal.

YY. Background Check

Employees of the Successful Vendor that in the course of performance of this contract will be on any of RIPTA's Properties may be subject to a Criminal Background Check.

ZZ. Security Requirements for Work on RIPTA Property

1. Upon arrive at the RIPTA work location they are to sign in with the Mechanical Foreman (or designated person) on duty
2. Wear all the proper safety equipment as required.
3. Display RIPTA issued vendor badge so it can be observed on their person.
4. Access only areas where permission has been granted.
5. Sign out with the same Foreman they signed in with.
6. Secure the facility prior to the facility being locked up.
7. Any issued or non-compliance with these rules could result in their access to the property being denied.

AAA. Records Retention

All required records for this contract will be retained for a minimum of three years after grantees or sub grantees make final payments and all other pending matters are closed.

BBB. Litigation

In the last ten (10) years, has any customer to which you provide the same or similar services that are the subject of this procurement initiated a lawsuit or arbitration against you relating to your provision of the services?

If so, provide a copy of the complaint against you and advise as to the status of the proceeding. If the case has been resolved, please describe the resolution of the case.

CCC. Public Records/Confidentiality

The Proposals received become the exclusive property of RIPTA. When a contract award is approved by RIPTA, all Proposals submitted in response to this Request for Proposals shall become a matter of public record and shall be regarded as public records, with the exception of those elements of each Proposal that are marked as "CONFIDENTIAL" or PROPRIETARY". If required by law or by an order of a court, RIPTA may be required to disclose such records or portions thereof, including without limitation those so marked

DDD. Utilization of Small Business Sub-Contractors

It is suggested that Prime Contractors provide subcontracting opportunities that small business, including DBE's can reasonably perform rather than self-performing all of the work in the contract.

EEE. Federal, State and Local Safety, Health and Environmental Regulations.

It shall be the responsibility of the Contractor to follow all relevant Safety and Health Regulations. The Contractor shall be responsible to determine which regulations apply and they shall follow them. The Authority may include specific RIPTA policies, in the Scope of Work, which must be followed.

FFF. Licenses and Certifications

The Contractor shall be responsible to ensure their company and any and all Subcontractors possible the necessary licenses and certifications to perform the work as required by the State of Rhode Island and the Authorities having Jurisdiction.

GGG. Covid 19 Safety Procedures

The Contractor and all Subcontractors working on site for this project must adhere to the Center for Disease Control and Rhode Island Department of Health Safety Guidelines in effect at the time the work is being performed. The Guidelines include, but are not limited to the following:

1. Prior to anyone being allowed on the campus the following screening questions should be asked:
1. Have you or any family members tested positive for COVID-19?
2. Have you felt ill recently?
3. If the answer to any of these two questions is YES, then the person should be advised that they cannot come onto the job site.
4. All workers shall wear face coverings while on the property.
5. All workers shall check in with the job supervisor.
6. The General Contractor shall be responsible to keep a log with the following information on all the workers.
    a. name,
    b. date, time,
    c. location visited.

d, this log shall be made available to RIPTA whenever requested.

7. Maintains proper hygiene while working on site.
8. Wipe down and sanitize any work areas with high volume touch points when completing their work.
9. Does not congregate-keep proper spacing (6 feet) distance when possible.

HHH. Retainage for Construction and Design Build Contracts

The Authority will reserve retainage in the amount of ten (10) percent of the contract value until Substantial Completion is complete at which point it will be reduced to five (5) percent until the project is complete. The balance of the retainage will be paid when the project reaches final completion.

III. Substantial completion

Substantial completion is defined as the stage in the progress of the work as determined and certified by the Authority in writing to the Contractor, on which the work is sufficiently complete and satisfactory. Substantial completion means that the property may be occupied or used for the purpose for which it is intended, and only minor items such as touch-up, adjustments, and minor replacements or installations remain to be completed or corrected ,

JJJ. Mobilization/Demobilization

Mobilization and Demobilization are not allowable expenses under Federal Transit Administration Rules. Therefore, vendors are advised that the costs associated with these items must be allocated to other areas of the Contract.

VIII. REQUEST FOR APPROVED EQUAL FORM

This form must be submitted electronically IN MICROSOFT WORD FORMAT TO RIPTA CONTRACTS MANAGER

REQUEST FOR APPROVAL EQUAL QUALIFICATION OR CLARIFICATION

Page:_____ **Ref: RFP NO. 24-28**
Project No._____

To: **Rhode Island Public Transit Authority**

From: _____

Page & Reference:_____

_____

Request Description

Use Additional Sheet If More Space Is Required

Accepted:_____ **Rejected:**_____ **See Addendum #**_____

Explanation:_____

_____
_____
_____
_____
_____
_____
_____

IX. REQUIRED PROPOSAL SUBMISSIONS

The following items marked with an "X" must be submitted with Response.
Failure to submit forms may result in Proposal being deemed non-responsive.
Please submit them in the correct order

Required Company Information Form (found third page of pkg)	X
Must be completed by Prime and All Subcontractors	
Solicitation	X
Offer	X
Statement of Eligibility	X
Affidavit of Non-Collusion	X
Certification of Restrictions on Lobbying	X
Buy America Certificate **FORM MUST BE SUBMITTED WITH PROPOSAL, IF CHECKED, OR PROPOSAL WILL BE CONSIDERED NON-RESPONSIVE**	X
Disadvantaged Business Enterprise	X **This paperwork must be completed regardless of a DBE Goal; DBE Participation is strongly encouraged. All Subcontractors must be listed regardless of DBE Status**
General Contract Compliance Certificate Agreement (EEO)	X
Certification of Primary Participant Debarment	X
Certification of a Subcontractor (Debarment)	X
Each Subcontractor and potential subcontractor must fill in and sign.	
Non-Resident Contractor (if applicable)	X
Davis Bacon Act Compliance Apprenticeship Certification	X
Applicable Type: (X) Building ( ) Highway	
Wage Determination Number: https://sam.gov/wage-determination/RI20240001/5	
Drug & Alcohol Testing	X
Proposal Guarantee (Surety)	X
Telecommunications Clause	X
Human Trafficking Clause	X
Federal Tax Liability and Recent Felony Conviction	X

The following items marked with an "X" must be submitted AFTER AWARD of the Contract

Designation of an Independent Contractor Form **After award of Contract for Sole Proprietors**	X
IRS W-9 Form	X
Performance and Payment Bonds	X
Certificate of Insurance- (As required in Section XXII and the Technical Specifications)	X

NOTE:
ITEMS WITHOUT AN "X" AND THEIR RESPECTIVE TERMS AND CONDITIONS ARE NOT REQUIRED IN THIS PROPOSAL

X. SOLICITATION FORM

COMPANY NAME _____

PROPOSAL NO. OR PROJECT NO. **24-28**

DESCRIPTION **Pawtucket Central Falls Passenger Facilities Building RFP for Construction**

A. PROPOSAL REQUIREMENTS

Sealed Proposals in original and Three copy (ies) will be received at the offices of the Rhode Island Public Transit Authority, 705 Elmwood Avenue Providence, Rhode Island 02907, at the Proposal date and hour set forth on the Request for Proposals or any time prior to the date and hour. Late Proposals will not be accepted.

B. CONTRACT DOCUMENTS

By executing the offer form enclosed herewith, the Proposers agrees to provide all services set forth on the specifications attached hereto upon the terms and conditions set forth in paragraphs A, B, C and D.

C. PAYMENT SCHEDULE

Payment will not be made until receipt and installation of merchandise is accepted by the Transit Authority.

D. COST FOR SERVICE

Please complete necessary cost information as outlined in the Proposal Technical Specifications.

XI. OFFER FORM

Proposers understands that any condition other than stated in the specifications, clarification made to the above, or information submitted on or with this form, other than that requested, may render the Proposal non-responsive.

By execution below, Proposers hereby offers to furnish services in accordance with the contract documents that are a part of the specifications and agrees to fully comply with the contract documents.

PROPOSAL NO 24-28

PROPOSERS _____

EMPLOYER IDENTIFICATION NO.: **to be provided by Vendor at time of Contract Award**

_____

NAME_____

ADDRESS_____

CITY/STATE/ZIP_____

TYPE OF BUSINESS ENTITY: (Please check one)

Sole Proprietor _____
Partnership _____
Corporation _____

PROPOSERS'S CONTRACTING OFFICER

_____
Name *(Please Print)*

_____
Authorized Signature

_____
Title

XII. STATEMENT OF ELIGIBILITY FORM

The _____hereby certifies that he/she
(Name of Proposers)
is/is not (underscore one) included on the Comptroller General's Lists of Persons or Firms Currently Barred for Violations of Various Public Contracts Incorporating Labor Standards Provisions.

_____
Name of Firm

_____
Address

_____
City, State, Zip

_____
Signature of Authorized Person

_____
Date Authorized

XIII. AFFIDAVIT OF NON-COLLUSION FORM

I hereby swear (or affirm) under penalty for perjury:

1. that I am the Proposers (if the Proposers is an individual), a partner of the Proposers (if the Proposers is partnership), or an officer or employee of the proposing corporation having authority to sign on its behalf (if the Proposers is a corporation).

2. that the attached Proposal has been arrived at by the Proposers independently, and has been submitted without collusion with, and without agreement, understanding, or planned common course of action with, any other vendor of materials, supplies, equipment, services described in Request for Proposals, designed to limit independent Proposals or competition.

3. that the contents of the Proposal have not been communicated by the Proposers or its employees or agents, to any person not an employee or agent of the Proposers or its surety on any bond furnished with the Proposal, and will not be communicated to any such person prior to the official opening of the Proposal; and

4. that I have fully informed myself regarding the accuracy of the statement made on this affidavit.

_____
Name

_____
Address

_____
City, State, Zip

_____
Signature of Authorized Official

_____
Date Authorized

Subscribed and sworn before me this _____ day of _____, 20____

Notary Public

My commission expires. _____

XIV. CERTIFICATION OF RESTRICTIONS ON LOBBYING FORM

I, _____, hereby certify on
(Name/title of Proposers Authorized Official)

behalf of: _____that:
(Name of Proposers)

1) No Federal appropriated funds have been paid or will be paid, by or on behalf of the undersigned, to any person for influencing or attempting to influence an officer or employee of any agency, a Member of Congress, an officer or employee of Congress, or an employee of a member of Congress in connection with the awarding of any Federal contract, the making of any Federal grant, the making of any Federal loan, the entering into of any cooperative agreement, and the extension, continuation, grant, loan, or cooperative agreement.

2) If any funds other than Federal appropriated funds have been paid to any person for influencing or attempting to influence an officer or employee of any agency, a Member of Congress, or an employee of a member of Congress in connection with this Federal contract, loan, or cooperative agreement, the undersigned shall complete and submit Standard Form-LLL, "Disclosure Form to Report Lobbying", in accordance with its instructions.

3) The undersigned shall require that the language of this certification be included in the award documents for all sub-awards at all tiers (including subcontracts, sub-grants, and contracts under grants, loans, and cooperative agreements) and that all sub-recipients shall certify and disclosure accordingly.

This certification is a material representation of fact upon which reliance is placed when this transaction was made or entered into. Submission of the certification is a prerequisite for making or entering into this transaction imposed by Section 1352, Title 31, U.S. Code. Any person who fails to file the required certification shall be subject to a civil penalty of not less than $10,000 and not more than $100,000 for each such failure.

Executed this _____ day of _____, 20_____.

By _____
(Signature of Authorized Official)

XV. BUY AMERICA CERTIFICATION REQUIREMENTS I FOR PROCUREMENT OF STEEL OR MANUFACTURED PRODUCTS

49 U.S.C. 5323(j) and 49 CFR 661.6 provide that no Federal funds may not be obligated for mass transportation projects unless steel and manufactured products used in these projects are produced in the United States.

If steel or manufactured products are being procured, the appropriate certificate as set forth below shall be completed and submitted by each Proposers.

"Construction materials used in projects are subject to the domestic preference requirement of the Build America, Buy America Act, Pub. L. 117-58, div. G, tit. IX, 70911 70927 (2021), as implemented by the U.S. Office of Management and Budget, the U.S. Department of Transportation, and FTA. The Recipient acknowledges that this agreement is neither a waiver of 70914(a) nor a finding under 70914(b)."

Certificate of Compliance-The Proposers hereby certifies that it will comply with the requirements of 49 U.S.C. 5323 (j) (1) and the Applicable regulations on 49 CFR Part 661.12

COMPANY NAME _____

SIGNATURE _____

TITLE _____

DATE _____

Certification of Non-Compliance-The Proposers hereby certifies that it cannot comply with the requirements of 49 U.S.C. 5323 (j) (1).

COMPANY NAME _____

SIGNATURE _____

TITLE _____

DATE _____

FORM MUST BE SIGNED AND SUBMITTED WITH PROPOSAL OR PROPOSAL WILL BE CONSIDERED NON-RESPONSIVE.

XVI. BUY AMERICA CERTIFICATION REQUIREMENTS II OF PROCUREMENT OF BUSES, OTHER ROLLING STOCK AND ASSOCIATED EQUIPMENT

49 U.S.C. 5323 (j) and 49 CFR 661.11 and 12 provide that no Federal funds be obligated for procurement of buses, other rolling stock, and associated equipment unless the following conditions are met:

1. The cost of components which are produced in the United States is more than 70 per centum (70%) of the cost of all components of the vehicle or equipment described in this paragraph; and
2. Final assembly of the vehicle or equipment described in this paragraph has taken place in the United States.
   If buses or other rolling stock (including train control, communication, and traction power equipment) are being procured, the appropriate certificate as set forth below shall be completed and submitted by each Proposers in accordance with the requirements.

Certificate of Compliance-The Proposers hereby certifies that it **will comply** with the requirements of the 49 U.S.C. 5323 (j) (2) (c) and CFR Part 661.

COMPANY NAME _____

SIGNATURE _____

TITLE _____

DATE _____

Certificate of non-Compliance-The Proposers hereby certifies that it **cannot comply** with the requirements of the Surface Transportation Assistance Act of 1982, as amended, but may qualify for an exception to the requirements.

COMPANY NAME _____

SIGNATURE _____

TITLE _____

DATE _____

FORM MUST BE SIGNED AND SUBMITTED WITH PROPOSAL OR PROPOSAL WILL BE CONSIDERED NON-RESPONSIVE.

XVII. BUY AMERICA PRE-AWARD AND POST-DELIVERY AUDITS:

A. Prior to Contract award,

The apparent successful offeror shall provide to the Authority's auditors the cost of the components and subcomponents to be used in the manufacturing of the rolling stock, their country of origin, the location of final assembly, the activities that will take place at the location and pertinent supporting documentation for the purpose of RIPTA performing the cited Pre-Award Audit of Buy-America requirements.

B. After delivery and acceptance of the vehicles,

The Contractor shall provide to the Authority's auditors the cost of the components and subcomponents used in the manufacture of the rolling stock, their country of origin, the location of final assembly, the activities that took place at the location and pertinent supporting documentation to enable RIPTA to perform the cited Post-Delivery Audit of Buy America Requirements.

C. Authority Review

The contractor shall facilitate the reviews by the Authority's auditors by providing the supporting documentation for the above information in a timely fashion.

XVIII. DISADVANTAGED BUSINESS ENTERPRISES PROGRAM

For the purpose of this Contract, the goal for utilization of DBEs shall be the following percent of the Contract Dollar Amount:

DBE GOAL FOR THIS CONTRACT: Zero Percent

A. Policy

1. It is the policy of the DOT that Disadvantaged Business Entities are given the maximum opportunity to participate in the performance of contracts financed in whole or in part with Federal funds, pursuant to 49 CFR Part 26. . Consequently, the DBE requirements of 49 CFR Part 26, as amended, apply to this Contract and RIPTA and its Contractors shall take all necessary and reasonable steps to ensure that DBE's have the maximum opportunity to compete for such contracts. RIPTA and its Contractors shall not discriminate on the basis of race, color, religion, national origin, age sexual orientation, disability, gender identity, expression, or veteran status, in the award and performance of DOT-assisted contracts.
2. Contractor Obligation –
   a. In the event that a DBE Utilization Goal is set on this Contract, Contractors and subcontractors failing to carry out applicable requirements of 49 CFR Part 26 and/or uses or attempts to use false, fraudulent, or deceitful statements/representations or otherwise exhibits a serious lack of business integrity or honesty to meet such DBE Utilization Goal, shall be in breach of contract. After notification to the DOT, RIPTA may terminate the Contract or take any other action it deems appropriate. The DOT may take joint or separate action, as it deems appropriate and necessary.
   b. The Contractor shall provide the following assurance and ensure that each subcontract that it enters with a subcontractor contains the same assurance:

      The Contractor, sub recipient or subcontractor shall not discriminate on the basis of race, color, religion, age, national origin, sexual orientation, disability, gender identity, expression, or veteran status in the performance of this contract. The Contractor shall carry out applicable requirements of 49 CFR part 26 in the award and administration of DOT-assisted contracts. Failure by the Contractor to carry out these requirements is a material breach of this contract, which may result in the termination of this contract or such other remedy as the recipient, deems appropriate, which may include, but is not limited to:

(1). Withholding monthly progress payments.
(2). Assessing sanctions.
(3). Liquidated damages; and/or
(4) Disqualifying the Contractor from future proposals as non-responsible

2. Contractor Obligation – In the event that a DBE Utilization Goal is set on this Contract, Contractors and subcontractors failing to carry out applicable requirements of 49 CFR Part 26 and/or uses or attempts to use false, fraudulent, or deceitful statements/representations or otherwise exhibits a serious lack of business integrity or honesty to meet such DBE Utilization Goal, shall be in breach of contract. After notification to the DOT, RIPTA may terminate the Contract or take any other action it deems appropriate. The DOT may take joint or separate action, as it deems appropriate and necessary.

3. DBE Utilization - The Contractor shall provide for full and fair utilization of DBEs by complying with the requirements of this Section. Such requirements include the achievement of the stated DBE Utilization Goal in the performance and completion of the work under the Contract. Nothing in this Section shall be construed to require the utilization of any DBEs, which is either not qualified or unavailable.

a. ***All DBEs submitted must be certified by the State of Rhode Island at the time of Proposal submittal. A copy of the DBE Certification Letter from the State of Rhode Island Office of Civil Rights must accompany the Proposal submittal.***

b. **If a DBE Utilization Goal is set for this Contract, a Contractor's DBE utilization and/or "Good Faith Effort" to obtain DBE participation shall be considered when reviewing proposal submittals for responsiveness.**

C. **If NO DBE Utilization Goal is set for this Contract, Contractors are, nonetheless, encouraged to have DBE/Small Business participation in their proposal and to include the associated DBE forms in its proposal submittal.**

B. Definitions.

The terms used in these special provisions shall be defined as follows:

1. Joint Venture

An association of two or more persons to carry out a single business enterprise for profit, for which purpose they combine their property, money, efforts, skills, and knowledge.

2. Disadvantaged Business

means a small business concern in which is, at least, 51 percent owned by one or more socially and economically disadvantaged individuals, or, in the case of any publicly owned business, at least 51 percent of the stock of which is owned by one or more socially and economically, disadvantaged individuals who own it.

3. **Small Business Concern**
A small business as defined pursuant to Section 3 of the Small Business Act and relevant regulations promulgated pursuant thereto.

4. **Socially and Economically Disadvantaged Individuals**
means those individuals who are citizens of the United Stated (or lawfully admitted permanent residents) and who are women, Black Americans, Hispanic Americans, Native Americans, Asian-Pacific Americans, or Asian-Indian Americans and any other minorities of individuals found to be disadvantaged by the Small Business Administration pursuant to Section 8 (a) of the Small Business Act, RIPTA shall make a rebuttal presumption the individuals in the following groups are socially and economically disadvantaged. RIPTA may also determine, on a case-by-case basis, that individuals who are not a member of one of the following groups are socially and economically disadvantaged:

a. **Black or African Americans**, which includes persons having origins in any of the Black racial groups of Africa.
b. **Hispanic or Latino Americans**, which includes persons of Mexican, Puerto Rican, Cuban, Central or South America, or other Spanish culture or Portuguese culture, regardless of race.
c. **American Indian or Alaska Native**, which includes persons who are American Indian, Eskimo or Aleuts.
d. **Asian-Pacific Americans or Native Hawaiian**, which includes persons whose origins are Hawaii, Japan, China, Taiwan, Korea, Vietnam, Laos, Cambodia, the Philippines, Samoa, Guam, the U.S. Trust Territories of the Pacific, and the Northern Marianas; and
e. **Asian-Indian Americ**ans, which includes persons whose origins, are from India, Pakistan, and Bangladesh.
f. **Disadvantaged Business Enterprise (DBE) Liaison Officer** – the individual designated by the Authority to monitor compliance with these Special Provisions and to assist in their implementation.
g. **Proposers** – any individual, partnership, joint venture, corporation, or firm submitting a Proposal for the contract.

C. Recognition of DBE Commitment

Each Contractor shall recognize RIPTA's commitment to ensure that DBEs be afforded full opportunity to participate in contracts awarded by RIPTA and will not be discriminated against on the grounds of race, color, religion, age, national origin, sexual orientation, disability, gender identity or expression or veteran status.

D. Proposal Submissions for Contracts with DBE Utilization Goals and/or DBE Participation

The Schedule of DBE Participation (Attachment A) shall have the following information.

1. The name and address of each DBE firm that will participate in the Contract.
2. A description of the work each named DBE firm will perform; and
3. The dollar amount and percentage of the DBE Utilization Goal, if applicable, of participation by each named DBE firm.
4. RIPTA encourages all firms located in the United States that are currently certified as DBEs and SBAs by Federal, State and Local agencies to apply for certification in the State of Rhode Island. ***Only DBEs certified by the State of Rhode Island at the time of Proposal submittal shall be counted towards any DBE Utilization Goal requirement.***

If a minority business would like to be certified by the State of Rhode Island, contact the Minority Business Enterprise Compliance Program:

Ms. Dorinda Keene, Assistant Administrator – MBE Compliance
RI Department of Administration
Office of Diversity, Equity and Opportunity
Minority Business Enterprise Compliance Program
One Capitol Hill, 3rd Floor.
Providence, RI 02908
401.574.8670

E. Good Faith Efforts for DBE Participation:

If the apparent successful Contractors' submissions do not satisfy the goal, RIPTA shall determine whether the apparent successful competitor has made good faith efforts to obtain DBE participation in accordance with the guidelines stated in Paragraph F, Sub-paragraph 1, below.

Unsuccessful efforts in gaining DBE participation must be documented on the "DBE Unavailability Certification" attached hereto as Attachment D. Meeting the DBE contract goals or making good faith efforts to meet the goals is a condition of receiving a Federal Transit Administration assisted contract for which contract goals have been established by RIPTA.

The legitimacy of each DBE or disadvantaged-majority joint venture shall be determined by RIPTA, based on the information submitted in the affidavits attached hereto as Attachments C and D. RIPTA will require all prime contractors to make good faith efforts to replace a DBE subcontractor that is unable to perform successfully with another DBE. RIPTA shall approve all substitutions of subcontractors **before** award of contract and **during** contract performance, in order that substitute firms are eligible DBE's.

F. Procedure Prior to Contact Award

1. Guidance Concerning Good Faith Efforts to Meet DBE Contract Goals.

RIPTA may decide that a Contractor that has failed to meet DBE contract goals may receive the Contract upon determining that the efforts the Contractor made to obtain DBE participation were "good faith efforts" to meet the goal. RIPTA shall not consider efforts that are merely pro forma to be good faith efforts to meet the goals, even if they are sincerely motivated, if, given all relevant circumstances, they could not reasonably be expected to produce a level of DBE participation sufficient to meet the goals. In order to award a contract to a Contractor that has failed to meet DBE contract goals, RIPTA must determine that the competitor's efforts were those that, given all relevant circumstances, a competitor, actively and aggressively seeking to meet the goals would make.

Following is a list of the kinds of efforts RIPTA may consider. The list is not exclusive or exhaustive and in appropriate cases, RIPTA shall consider other relevant factors or types of efforts. RIPTA shall consider not only the different kinds of efforts the contractor has made, but also the quantity and intensity of those efforts. All information must be in writing and copies of all ads, written notices, follow-up letters and/or all other correspondence must be presented whenever a waiver is asked for.

RIPTA will consider the following efforts:

i. whether the contractor attended any pre-solicitation or pre-Proposal meetings that were scheduled by RIPTA to inform DBEs of contracting opportunities.

ii. whether the contractor advertised in general circulation, trade association, and disadvantaged focus media concerning the sub-contracting opportunities.

iii. whether the contractor provided written notice to a reasonable number of specific DBEs that their interest in the contract was being solicited in sufficient time to allow the DBEs to participate effectively.

iv. whether the contractor followed up initial solicitation of interest by contracting DBEs to determine with certainty whether the DBEs were interested.

v. whether the contractor selected portions of the work to be performed by DBEs in order to increase the likelihood of meeting the DBE goals including, where appropriate, breaking down contracts into economically feasible units to facilitate DBE participation.

vi. whether the contractor provided interested DBEs with adequate information about the plans, specifications, and requirements of the contract.

vii. whether the contractor negotiated in good faith with interested DBEs, not rejecting DBEs as unqualified without sound reasons based on a thorough investigation of their capabilities.

viii. whether the contractor made efforts to assist interested DBEs in obtaining bonding lines of credit, or insurance required by RIPTA or contractor; and

ix. Whether the contractor effectively used the services of available disadvantaged community organizations, disadvantaged contractor's groups, Local, State and Federal disadvantaged business assistance offices, and other organizations that provide assistance in the recruitment and place of DBEs.

G. Termination of DBE Subcontractors

In any case when a prime contractor wishes to either: A: decrease the price to be paid to the DBE and the disadvantaged non-disadvantaged joint venture or to B: terminate a DBE firm, the prime contractor must first provide the DBE with five days' notice of the prime contractor's intent and reason to terminate the contract between them, and must also advise the DBE firm that it has the right to contact RIPTA to object to the termination. In addition, after the five-day written notice to the DBE has expired, the prime contractor must provide RIPTA with a written request to approve termination. The request must state the business reason why the prime contractor wishes to terminate the contract and must include all documentation in support of that business reason. A prime contractor may only reduce the scope or terminate a DBE firm for cause. It may not terminate a DBE contract for convenience. A DBE firm may not be terminated until written approval has been provided by RIPTA. If RIPTA approves a request to terminate, the prime contractor must make a good faith effort to substitute another DBE firm to replace the firm that has been terminated. This good faith effort shall be documented and subject to review by RIPTA. Failure to make a good faith effort may be deemed a breach of the prime contractor's contract with RIPTA and may result in the prime contractor being barred from submitting proposals on future RIPTA projects or subject to any other remedy RIPTA deems appropriate.

H. Substitution of Subcontractors

RIPTA shall review for its approval all substitutions of subcontractors in order to determine if the percentage goal will be decreased by substitution of a disadvantaged contract/supplier with a non-disadvantaged contractor/supplier.

Where RIPTA has approved termination of a sub-contract held by an DBE or disadvantaged non-disadvantaged joint venture, the successful Proposers

shall make every reasonable effort to propose and enter into an alternative sub-contract or subcontracts for the same work to be performed by another qualified DBE for a contract price or prices totaling not less than the contract price of the terminated sub-contract. Satisfactory evidence of reasonable efforts shall be timely furnished by RIPTA.

I. Program Compliance

Discrimination on the basis of race, color, religion, age, national origin, sexual orientation, disability, gender identity or expression or veteran status shall not be tolerated under any circumstance. RIPTA shall monitor the schedule for DBE participation in an effort to isolate those prime contractors who do not adhere to the non-discriminatory policies of RIPTA. If such contractor fails to respond to counseling with respect to the disposition of subcontracts pertaining to RIPTA funds, RIPTA reserves the right to terminate the contract and to consider future Proposals of such contractor to be non-responsive in the absence of written assurance from it of the full opportunity for DBEs to participate in its awards of subcontracts, together with the follow-up to verify such participation.

J. Maintenance of Records

All records relating to the contract shall be maintained by the contractor for a period of three (3) years after project completion.

K. Prompt Payment

The prime contractor agrees to pay each subcontractor under this prime contract for satisfactory performance of its contract no later than 30 days from the receipt of each payment the prime contractor receives from RIPTA. The prime contractor agrees further to return retainage payments to each subcontractor within 30 days after the subcontractor's work is satisfactorily completed. Any delay or postponement of payment from the above reference period may occur only for good cause following written approval of RIPTA. This clause applies to both DBE and non-DBE subcontractors. RIPTA reserves the right to hold payments to the Contractor if payments verification logs are not submitted within 30 days of payments. Failure to submit payments to DBE subcontractors within 30 days will result in action by RIPTA up to and including disqualification from any future RIPTA Procurements.

L. Monitoring Payments to DBEs

RIPTA requires that prime contractors to maintain records and documents of payments to DBEs following the completion of the contract. These records will be made available for inspection upon request by any authorized representative of RIPTA or United States Department of Transportation. This requirement also extends to any DBE Subcontractor. Reports of payments to DBE Subcontractors shall be provided to the RIPTA DBE Liaison Officer on a monthly basis. Failure to submit these reports on a timely basis may result in delay of payments.

XIX. DISADVANTAGED BUSINESS ENTERPRISE REQUIRED FORMS

Attachment A: Schedule of DBE Participation
Submitted if DBE firm or firms will be participating in the Proposal.

Attachment B: DBE Application Agreement
Submitted if DBE firm or firms will be participating in the Proposal.

Attachment C: Letter of Intent to Perform as a Subcontractor
Submitted if DBE firm or firms will be participating in the Proposal.

Attachment D: DBE Unavailability Summary Sheet
Submitted if DBE firm or firms you have contacted cannot participate. This form is used to document good faith effort. This form only needs to be completed when there is a DBE Participation Goal.

Attachment E: Narrative Explanation for Lack of DBE Participation
Submitted by the Prime Contractor to explain lack of DBE/SBA participation.

Attachment F: Documentation of DBE Utilization
To be filled in by the DBE firm and the prime contractor once the DBE Subcontractor has been paid.
Please Note: Final payment to the Prime Contractor will be held until this form or forms are received for each DBE Subcontractor.

DBE FIRMS PROPOSING AS A PRIME CONTRACTOR: the following forms must be filled in, signed, and submitted with the Proposal.

Attachment A, Attachment B
Please state, on these forms, that you are proposing as a prime contractor.

CERTIFICATION LETTER OR NOTIFICATION MUST BE INCLUDED FOR EACH DBE FROM THE STATE OF RHODE ISLAND.

Please record by letter (using the list below) under the DBE Category Column found on Attachment A: Schedule of DBE Participation Form on the following page

a. "Black Americans", which includes persons having origins in any of the Black racial groups of Africa.
b. "Hispanic Americans", which includes persons of Mexicans, Puerto Rican, Cuban, Central or South America, or other Spanish culture or Portuguese or origin, regardless of race.
c. "Native Americans", which include persons who are American Indian, Eskimos, Aleuts, or Native Hawaiians:
d. "Asia-Pacific Americans", which includes persons whose origins are from Japan, China, Taiwan, Korea, Vietnam, Laos, Cambodia, the Philippines, Samoa, Guam, the U.S. Trust Territories of the Pacific, and the Northern Marianas.
e. "Asian-Indian Americans", which includes persons whose origins are from India, Pakistan, and Bangladesh; and
f. Any other minorities or individuals found to be disadvantaged by the Small Business Administration pursuant to Section 8 (a) of the Small Business Act.

SCHEDULE OF SUBCONTRACTOR PARTICIPATION

All Subcontractors must be listed regardless of DBE Status

A. Attachment A

Company Name: _____

Project Number: **24-28** **Project:** **Pawtucket Central Falls Passenger Facilities BuildingRFP for Construction**

*Please provide copy of DBE Certification Letter for each DBE firm listed from the Rhode Island Office of Civil Rights. **DBE Vendors must be certified in the State of Rhode Island at the time of Proposal Submittal to be considered. A full, up to date list of Rhode Island DBEs can be obtained at the following website:** https://dedi.ri.gov/divisions-units/minority-business-enterprise-compliance-office/us-dot-disadvantaged-business

Firm Name	Firm Address	DBE Category (if applicable)	Phone Number	Contact Name	Work to be Performed	Estimated Value Dollars	Estimated Value Percent of Proposal

The undersigned will enter into a formal agreement with Disadvantaged Business Enterprise firms for work listed in this schedule conditioned upon execution of a contract with the Rhode Island Public Transit Authority.

Authorized Signature of Proposers Official_____

Each DBE Firm listed in the Section must also complete the Required Company Information Form and the Certification of Subcontractor Form *Use additional forms as needed.

DBE APPLICATION AGREEMENT

A. Attachment B

Project Number: 24-28

Project Name: Pawtucket Central Falls Passenger Facilities Building RFP for Construction

With respect to the above numbered project, I hereby certify that I am the _____ and duly authorized representative of _____
(Title) (Firm)
Address is _____, _____, _____
(Street) (State) (Zip Code)

I do hereby certify that it is the intention of the above organization to affirmatively seek out and consider Disadvantaged Business Enterprises to participate in this contract as contractors, Subcontractors and/or suppliers of requirements of the U.S. Department of Transportation's regulation 49 CFR Part 26.

I understand and agree that any and all contracting in connection with this contract, whether undertaken prior to or subsequently to award of contract, will be in accordance with this provision.

The utilization of Disadvantaged Business Enterprise is in addition to all other equal opportunity requirements of this contract.

_____
Authorized Signature

_____
Title

LETTER OF INTENT TO PERFORM AS A SUBCONTRACTOR

A. **Attachment C**

To: _____
(Name of Prime or General Proposers)

The undersigned intends to perform work in connection with the above project as (check one):

___ **an** individual ___ **a** corporation

___ **a** partnership ___ **a** joint venture

The undersigned is prepared to perform the following described work in connection with the above project (specify in detail particular work items or parts thereof to be performed).

_____
_____
_____
_____
_____
_____
_____
_____
_____
_____

for the following compensation: _____

_____
(Name of DBE Contractor)

DBE GOOD FAITH EFFORT SUMMARY SHEET

A. Attachment D.

RIPTA requires a listing of DBE firms contacted; but not able to perform work. Use additional pages as needed. The DBE Goal for this project is Zero Percent percent. **. A full, up to date list of Rhode Island DBEs can be obtained at the following website: www.mbe.ri.gov/.**

Project Name: Pawtucket Central Falls Passenger Facilities Building

DBE Firm Name	DBE Firm Address	DBE Category	Phone Number Email Address	Contact Name	Reason Unable to Perform Work

RFP for Construction **Project Number: 24-28**

Form completed by: _____ Date:_____

NARRATIVE EXPLANATION FOR LACK OF DBE PARTICIPATION

A. Attachment E

Company Name: _____

Project Number: **24-28**

Project Name: **Pawtucket Central Falls Passenger Facilities Building RFP for Construction**

_____
_____
_____
_____
_____
_____
_____
_____
_____
_____
_____
_____
_____
_____
_____
_____
_____
_____
_____
_____
_____
_____

_____
(Authorized Signature of Prime Contractor)

TO BE FILLED IN BY THE PRIME CONTRACTOR TO EXPLAIN LACK OF DBE PARTICIPATION.

DOCUMENTATION OF DBE UTILIZATION

A. Attachment F

RIPTA Contract Number: 24-28

Prime Contractor: _____

DBE Name: _____

Starting Date: _____ **Completion Date:** _____

This is to verify the following:

- I was the approved DBE on the above contract.
- I performed the items of work Subcontracted.
- I actually received $_____ for my work.
- I received payment of retainage on _____
  (Date)

_____ _____
(Signature & Title of DBE) (Date)

_____ _____
(Signature & Title of Prime Contractor) (Date)

This form is to be filled in by the DBE firm and the prime contractor once the DBE Subcontractor has been paid.

Retainage payments will be made to each subcontractor within 30 days after the subcontractor's work is satisfactorily completed

Please Note: Final payment to the Prime Contractor will be held until this form or forms are received for each DBE Subcontractor.

XX. PERFORMANCE AND PAYMENT BOND INFORMATION

The selected Proposers shall furnish, within twenty (20) calendar days (if required) (See Required Proposal Submissions Page) after the date of notice of award of contract by RIPTA, Performance and Payment Bonds in the amount of 100% of the Proposal amount covering the faithful performance of the contract.

The Performance Bond is to be secured through an insurance company or companies which is licensed in the State of Rhode Island, or which is approved by the Authority.

The Bond will remain in effect until the Warranty commences.

XXI. PROPOSAL GUARANTEE (SURETY)

A Proposal Guarantee (if required) shall be submitted with the Proposal response. This guarantee shall be equivalent to five (5) percent of the Proposal price. The "Proposal guaranty shall consist of a firm commitment such a Proposal bond, certified check, or other negotiable instrument accompanying a Proposal as assurance that the Proposers will, upon will, upon acceptance of its Proposers, execute such contractual documents as may be required within twenty (20) calendar days after the date of notice of award of contract by RIPTA.

XXII. REQUIRED INSURANCE

The Proposers will be required to secure and maintain the following insurance coverages:

A. Minimum limits

1. Commercial comprehensive general liability insurance, with limits of $3,000,000.00 per accident and $5,000,000.00 aggregate.
1. Workers' Compensation Coverage in accordance with RI Statutory requirements.
2. The Rhode Island Public Transit Authority shall be named as additional insured under said policies.
3. Automotive Liability Insurance
   - $1,000,000.00 per accident and $3,000,000.00 aggregate: bodily injury.
   - $1,000,000.00 property damage
4. All insurance coverage must provide under an occurrence policy. Claims made policies are not acceptable.

B. Certificate Requirements

1. Each Proposers must provide RIPTA a Certificate of Insurance upon award of the contract. Coverage indicated on certificate must be kept in effect at all times during the contract period.

1. The General Liability Coverage shall include Contractual Liability and Completed Operations Coverages. The General Liability coverage, certificates must name: RIPTA and its respective directors, officers, employees, and affiliates as additional insureds. Reference should be made to project or job number and location.
2. A Waiver of Subrogation in favor of RIPTA must apply to the General Liability, Employers Liability, and Excess Liability / Umbrella policies.
3. Automobile Liability must cover any owed, rented, hired, or borrowed vehicles.
4. The Excess or Umbrella coverage must provide the required Liability limit over the General Liability, Automobile Liability, Employers Liability s, Professional Liability and Environmental Liability policies (if required).
5. If Proposers is to use any subcontractor during the course of the project, the subcontractor must maintain the same limits and terms as the Proposers. Certificates of Insurance for subcontractors must be provided to RIPTA with the Proposer's Submittal after award of the Contract.
6. All certificates of insurance must indicate the carrier policy cancellation terms.
7. All proposers must utilize insurance companies with a "Best" Rating of no less than A-, Size VIII.

C. Special Coverages

1 Contractor must maintain Environmental Pollution coverage with limits no less than $1,000,000 if contractors work includes the transport, delivery, storage, handling or disposal of any pollutants or other hazardous materials. This insurance is also required for all contracts involving any work on RIPTA's storage tanks, and fluid distribution systems

2 Installation Floater Insurance is required for all construction projects equal to the value of the project.

3 Professional Liability/Errors and Omission coverage shall be included in all Professional Services Contracts

RIPTA will entertain requests for a waiver of the requirements with regard to Commercial General Liability limits and Worker's Compensation Insurance on a case-by-case basis. RIPTA reserves the right to approve such requests, and or modify the requirements given a review of the project needs, and applicable federal/state regulations, requirements, and law. This request must be submitted through the Request for Approved Equal Process before award of the Contract.

Proposers shall provide to RIPTA Contracts Manager a Certificate of Insurance upon award of contract. This Certificate shall be kept in effect at all times. Current copies shall be provided to the Contracts Manager

XXIII. GENERAL CONTRACT COMPLIANCE CERTIFICATE AND AGREEMENT

RHODE ISLAND STATE EQUAL OPPORTUNITY OFFICE

The undersigned Contractor agrees and certifies, unless otherwise exempt, that it is in compliance with the applicable requirements of Federal Executive order No. 11246, as amended, Rhode Island General Law 28-5.1-10, and other regulations as issued by the Rhode Island Public Transit Authority, as set forth below, or will take steps to comply with such requirements prior to acceptance of any order from us. This agreement and certificate shall form a part of, and be deemed incorporated in, each order submitted to you for supplies or services exceeding $10,000. Failure to comply will be considered a substantial breach of the contract.

A. Equal Opportunity Clause

During the performance of this contract, the Contractor agrees as follows:

1. The Contractor will not discriminate against any employee or applicant for employment because of race, color, religion, sex, or natural origin. The Contractor will take affirmative action to ensure that applicants are employed, and that employees are treated during employment, without regard to their race, color, religion, sex, or national origin. Such action shall include, but not be limited to, the following: employment, upgrading, or transfer, recruitment or recruitment advertising, layoff or termination, rates of pay or other forms of compensation, and selection for training, including apprenticeship. The Contractor agrees to post in conspicuous places, available to employees and applicants for employment, notices to be provided by the contracting officer setting forth the provisions of the non-discrimination clause.
2. The Contractor will, in all solicitations or advertisements for placed by or on behalf of the contractor, state that all qualified applicants will receive consideration for employment without regard to race, color, religion, sex, or national origin.
3. The Contractor will send to each labor union or representative of workers with which he/she has collective bargaining agreement or other contract or understanding a notice, advising the labor union or worker's representative of the Contractor's commitments under Section 202 of Federal Executive order No. 11246, as amended, Rhode Island Law 28-5.1-10, and other regulations and relevant orders of the Secretary of Labor.

4. The Contractor will comply with all provisions of Federal Executive Order No. 11246, as amended, Rhode Island General Law 28-5.1-10, and other regulations and relevant orders of the Secretary of Labor.
5. The Contractor will furnish all information and reports required by Executive Order No. 11246, as amended, Rhode Island General Law 28-5.1-10 and other regulations as issued by the State of Rhode Island, and by the rules, regulations, and orders of the Secretary of Labor, or pursuant thereto, and will permit access to his/her books, records and accounts by the State Equal Opportunity Office and the Secretary of Labor for purposes of investigation to ascertain compliance with such rules, regulations and orders.
6. In the event of the Contractor's non-compliance with the non-compliance with the non-discrimination clauses of this contract or with any of such rules, regulations, or orders, this contract may be cancelled, terminated or suspended in whole or part, and the Contractor may be declared ineligible for further State contracts in accordance with procedures authorized in Federal Executive Order No. 11246, as amended, Rhode Island General Law 28-5.1-10 , and other regulations as issued by the State of Rhode Island, and such other sanctions may be imposed and remedies invoked as provided in Federal Executive Order No. 11246, as amended; Rhode Island Public Transit Authority, or by rule, regulation, or order of the Secretary of Labor, or as otherwise provided by law, or the State of Rhode Island and Providence Plantations.
7. The Contractor will include the provisions of paragraphs (1) through (7) in every sub-contract or purchase order unless exempted by rules, regulations, or orders of the Secretary of Labor issued pursuant to Section 204 of Federal Executive Order No. 11246, as amended, Rhode Island General Law 28-5.1-10, and other regulations as issued by the Rhode Island Public Transit Authority, so that such provisions will be binding upon each subcontractor or vendor. The Contractor will take such action with respect to any sub-contract of purchase order as the contracting agency may direct as a means of enforcing such provisions including sanctions for non-compliance; provided, however, that in the event the Contractor becomes involved in, or is threatened with litigation with a subcontractor or vendor as a result of such direction by the contracting agency, the Contractor may request the United States and the State of Rhode Island to enter into such litigation to protect the interest of the United States and the State of Rhode Island.

B. Age Discrimination

Pursuant to Federal Executive Order No. 11246, as amended, the Contractor will not, in connection with the employment, advancement or discharge of employees, or in connection with the terms, conditions, or privileges of their employment, discriminate against persons because of their age except upon the basis of a bona fide occupational qualification, retirement plan or statutory requirement, nor will the Contractor specify, in solicitations or advertisements for employees, a maximum age limit for employment unless the specified maximum age limit is based upon a bona fide occupational qualification, retirement plan or statutory requirement.

C. Employment of the Handicapped

1. Contractor will not discriminate against any employee or applicant for employment because of physical or mental handicap in regard to any position for which the employee or applicant for employment is qualified. Contractor agrees to take affirmative action to employ, advance in employment, and otherwise treat qualified handicapped individuals without discrimination based upon their physical or mental handicap in all employment practices such at the following employment, upgrading, demotion or transfer, recruitment, or recruitment advertising; layoff or termination, rates of selection for training, including apprenticeship.
2. Contractor agrees that if a handicapped individual files a complaint with him/her that he/she is not complying with the requirements of the Rehabilitation Act of 1973, he/she will (1) investigate the complaint and take appropriate action consistent with requirements of 41 CFR Part 60-741.29 and (2) maintain on file for three years, the record regarding the complaint and the actions taken.
3. Contractor agrees that if a handicapped individual files a complaint with the Department of Labor that he/she has not complied with the requirements of the act, (1) he/she will cooperate with the Department in its investigation of the complaint, and (2) he/she will provide all pertinent information regarding his/her employment practices with respect to the handicapped.
4. Contractor agrees to comply with the rules and regulations of Section 503 of the Rehabilitation Act of 1973 as interpreted in 41 CFR Part 60-741.29.
5. In the event of Contractor's noncompliance with the requirements of this clause contract may be terminated or suspended in whole or in part.
6. This clause shall be included in all subcontracts. In the event that this contract exceeds $10,000 but is less than $500,000 and

provides for performance in 90 days or more, Contractor further agrees as follows:

7. Contractor agrees (1) to establish an affirmative action program, appropriate procedures consistent with the guidelines and the rules of the Secretary of Labor, will provide the affirmative action regarding employment and advancement of the handicapped required by P.L. 93-516, (2) to publish the program in the employees or personnel handbook or otherwise distribute a copy to all personnel, (3) to review the program each year and to make such changes as may be appropriate, and (4) to designate one of the principal officials to be responsible for the establishment and operation of the program.
8. Contractor agrees to permit the examination by appropriate contracting agency officials or the Assistant Secretary for Employment Standards or the designee, of pertinent books, documents, papers, and records concerning employment and advancement of the handicapped.
9. Contractor agrees to post in conspicuous places, available to employees and applicants for employment, notices in a form to be prescribed by the Assistant Secretary for Employment Standards, provided by the contracting officer, stating Contractor's obligation under the law to take affirmative action to employ and advance in employment qualified handicapped employees and applicants for employment and the rights and remedies available.
10. Contractor will notify each labor union or representative of workers with which he/she has a collective bargaining agreement or other contract understanding, that he/she is bound by the terms of Section 503 of the Rehabilitation Act and is committed to take affirmative action to employ and advance in employment, physically and mentally handicapped individuals.

    In the event this contract exceeds $100,000 and provides for performance in 90 days or more, Contractor further agrees as follows:
11. Contractor agrees to submit a copy of his/her affirmative action program to the State Equal Opportunity Office within 30 days after the award of a contract or sub-contract.
12. Contractor agrees to submit a summary report to the State of Rhode Island and Providence Plantations Equal Opportunity Office by March 31 of each year during performance of the contract and by March 31 of the year following completion of the contract, in the form prescribed by State Equal Opportunity Office covering employment and complaint experience accommodations made and all steps taken to effectuate and carry out the commitments set forth in the affirmative action program.

XXIV. CERTIFICATE OF NON-SEGREGATED FACILITIES

Contractor certifies that he/she does not maintain or provide for his/her Employees any segregated facilities at any of his/her establishments, and that he/she does not permit his/her employees to perform their services at any such location, under his/her control, where segregated facilities are maintained. He/she certifies further that he/she will not permit his/her employees to perform their services at any location, under his/her control, where segregated facilities are maintained. Contractor agrees that a breach of this certification is a violation of the Equal Opportunity Clause in this contract. As used in this certification, the term "Segregated Facilities" means any waiting room, work areas, rest rooms, and washrooms, restaurants, and other eating areas, parking lots, drinking fountains, recreation or entertainment areas, transportation, and housing facilities provided for employees which are segregated by explicit directive or are, in fact, segregated on the basis of race, creed, color, or national origin, because of habit, local custom, or otherwise. He/she further agrees that (except where he/she has obtained identical certifications from proposed subcontractors for specific time periods), he/she will obtain identical certifications from proposed subcontractors prior to the award of subcontracts exceeding $10,000, which are not exempt from the provisions of the Equal Opportunity Clause; that he/she will forward the following notice to proposed subcontractors (except where the proposed subcontractors have submitted identical certifications for specific time periods).

XXV. NOTICE OF PROSPECTIVE SUBCONTRACTORS OF REQUIREMENT FOR CERTIFICATION OF NONSEGREGATED FACILITIES

A Certificate of Nonsegregated Facilities must be submitted prior to the award of a sub-contract exceeding $10,000 which is not exempt from the provisions of the Equal Opportunity Clause. The certification may be submitted either for each sub-contractor for all subcontracts during a period (i.e., quarterly, semi-annually, or annually).

NOTE: The penalty for making false statements in offers is prescribed in 18 USA 1001.

A. Affirmative Action Compliance Program

Contractor agrees to develop a written Affirmative Action Compliance Program for each of its establishments as required by Section 60-1.40 of Title 41 of the Code of Federal Regulations.

B. Employer's Information Report (EE)-1) Form 100

Contractor agrees to file in duplicate, Standard Form 100, entitled, **"Equal Employment Opportunity Employer Information Report EEO-1"** as required by Section 60-1.7 of Title 41 of the Code of Federal Regulations.

Send original copy to Federal authorities, duplicate copy to the State Equal Opportunity Office, 1 Capitol Hill, Providence, Rhode Island 02908-5865.

C. Notice to All Vendors

If it should be determined by the State Equal Opportunity Office that any company doing business with the State is guilty of non-compliance with the provisions of this document, said company will be given two (2) written warnings. If the said company does not comply immediately after the second written notice, then the State Equal Opportunity Office will notify the Rhode Island Public Transit Authority, who shall have the authority to have the contract **revoked** and all contractual obligations of the State dealing with the contract in question will be **null** and **void.**

D. Post Award Conference

Post Award Conference for the Implementation of Affirmative Action prior to Signing of Contract.

E. Signature Required

Failure to provide a signature prior to Award to successful Proposers shall be cause for Rejection of Proposal.

XXVI. GENERAL CONTRACT COMPLIANCE CERTIFICATE & AGREEMENT FORM

(Equal Employment Opportunity)

Authorized Signature: _____

Print Name: _____

Title: _____

Company Name: _____

Date: _____

Indicate Job Location Address: _____

PROPOSAL NO. 24-28

XXVII. DAVIS BACON ACT COMPLIANCE

I certify that I will comply with the Provisions of the Davis-Bacon Act for this project. I certify that I will pay the applicable Prevailing Wages as listed at the following web address: **http://www.access.gpo.gov/davisbacon/ri.html**

Authorized Signature: _____

Print Name: _____

Title: _____

Company Name: _____

Date: _____

Indicate Job Location Address: _____

XXVIII. CONTRACTOR APPRENTICESHIP CERTIFICATION FORM

Rhode Island Department of Labor and Training Professional Regulation
(***Applicable to Construction Contracts with a cost in excess of $1 million***)

_____(Company Name & Address) (hereafter "bidder") hereby certifies that bidder meets the general contractor apprenticeship requirements of R. I. Gen. Laws § 37- 13-3.1 because bidder meets one of the following qualifications (check):

A. _____Bidder sponsors a current and duly approved Rhode Island Department of Labor and Training Apprenticeship Program and currently employs at least one apprentice per trade/occupation, who will obtain "on the job training" experience in the apprentice's trade by performing on the contract.

B. _____Bidder sponsors a current and duly registered Rhode Island Department of Labor and Training reciprocal apprenticeship program pursuant to R. I. Gen. Laws § 28-45-16 and currently employs at least one apprentice per trade/occupation, who will obtain "on the job training" experience in the apprentice's trade by performing work on the contract (attach apprenticeship program standards, apprenticeship agreement and Rhode Island Department of Labor and Training Reciprocal Apprenticeship Program Approval);

C. _____Bidder has entered into a current collective bargaining agreement with a duly approved Rhode Island Department of Labor and Training Apprenticeship Program sponsor and, pursuant to the terms of the collective bargaining agreement, will employ at least one apprentice per trade/occupation, who will obtain "on the job training" experience in the apprentice's trade by performing work on the contract (attach relevant section of collective bargaining agreement and signature page).

D. _____Bidder has entered into a current labor agreement with a duly approved Rhode Island Department of Labor and Training Apprenticeship Program sponsor and, pursuant to the terms of the labor agreement, will employ at least one apprentice per trade/occupation, who will obtain "on the job training" experience in the apprentice's trade by performing work on the contract (attach relevant section of labor agreement and signature page).

E. _____Bidder will not perform work on the awarded contract except through subcontractors (nonperformance).

F. _____Bidder has received approval from the Rhode Island Department of Labor and Training that it satisfies the general contractor requirements of R. I. Gen. Laws §37-13-3.1 for purposes of a particular bid (attach Rhode Island Department of Labor and Training correspondence).

_____ _____
Printed Name and Title of Authorized Representative Date

_____
Signature of Authorized Representative

XXIX. CERTIFICATION OF PRIMARY PARTICIPANT FORM

Request for Proposals Number: 24-28
Project Pawtucket Central Falls Passenger Facilities Building RFP for Construction

The primary participant _____ certifies to the best of its knowledge and belief, that it and its principals:

1) Are not presently debarred, suspended, proposed for debarment, declared eligible, or voluntarily excluded from covered transactions by any Federal Department or Agency.
2) Have not within a three-year period preceding this Proposal been convicted of or had a civil judgment rendered against them for commission of fraud or a criminal offense in connection with obtaining, attempting to obtain, or performing a public (Federal, State, or Local) transaction or contract under a public transaction; violation of Federal or State antitrust statutes or commission of embezzlement, theft, forgery, bribery, falsification or destruction or records, making false statements, or receiving stolen property;
3) Are not presently indicted for or otherwise criminally or civilly charged by a government entity (Federal, State, or Local) with commission of any of the offenses enumerated in paragraph (2) of this certification; and
4) Have not within a three-year period preceding this application/Proposal had one or more public transactions (Federal, State, or Local) terminated for cause or default.
5) The Primary Participant also certifies that, if it later becomes aware of any information contradicting the statements of Paragraphs 1-4 above, it will promptly notify RIPTA.

The primary participant _____, certifies or affirms the truthfulness and accuracy of the contents of the statements submitted on or with this certification and understands that the provisions of 31 U.S.C Sections 3801 **ET SEQ**. are applicable thereto.

_____ _____
Signature/Title of Authorized Official Date

XXX. DEBARMENT CERTIFICATION

CERTIFICATION REQUIREMENTS FOR RECIPIENTS OF GRANTS
AND
COOPERATIVE AGREEMENTS
REGARDING DEBARMENT AND SUSPENSIONS

The purpose of the attached certifications is to exclude entities and individuals that the Federal Government has either debarred or suspended from obtaining Federal assistance funds through grants, cooperative agreements, or third-party contracts.

To assure that such entities and individuals are not involved in projects financed with Federal Transit Administration (FTA) assistance, FTA requires its applicants to complete the certificates.

The primary participant must sign the "**Certification of Primary Participant**" and, if there is a subcontractor, they must sign **the "Certification of a Subcontractor"** (If there is more than one subcontractor, they must all sign one of these forms.).

XXXI. CERTIFICATION OF A SUBCONTRACTOR FORM

Request for Proposals Number:

Project

The potential Subcontractor, _____
Certifies, by submission of this certification, that neither it nor its principals are presently debarred, suspended, proposed for debarment, declared ineligible or voluntarily excluded from participation in this transaction by any Federal Department or agency.

The Subcontractor, _____ certifies or affirms the truthfulness and accuracy of the contents of the statements submitted on or with this certification and understands that the provisions of 31 U.S.C. Sections 3801 **ET SEQ**. are applicable thereto.

_____
Signature/Title of Authorized Official

_____
Print Signature Date

XXXII. NON-RESIDENT CONTRACTOR INFORMATION

From: Department of Administration
Division of Taxation
289 Promenade Street
Providence, RI 02908
Notice: "To All Persons Engaging Non-Resident Contractors"
Regulation Re: Contractors and Subcontractors - "Regulation C"
Article III, Non-Resident Contractors
Any individual, partnership, joint venture, corporation, state, municipal government or exempt organization awarding a construction contract in Rhode Island to a non-resident contractor (as hereinafter defined) is required, pursuant to Section 44-1-6 of the General Laws, as last amended, to withhold 3% of the contract price to secure payment of any sales and use tax or income tax withheld, or both, that may be due to the State of Rhode Island in carrying out the contract.

Upon completion of the contract, the non-resident contractor is required to notify the Tax Administration shall, within 30 days after receipt of the request, audit the records and provide by certified mail to the person holding the funds and to the non-resident contractor, either a certificate of no tax due or a notice of taxes due.

The person holding the funds is required to pay to the Tax Administrator the amount set forth in the notice of taxed due, including interest and penalties, but not in excess of 3% of the contract price. Monies withheld in excess of taxes due the Tax Administrator may be paid to the non-resident contractor.
If the Tax Administrator does not furnish a certificate of no tax due or a notice of taxes due within 30 days after receipt of the request for the making of the audit, the person holding the funds may remit the full amount due to the non-resident contractor. The Tax Administrator shall not have any claim against such funds in the hand of the person holding the funds.

DEFINITION OF NON-RESIDENT CONTRACTOR

"A non-resident contractor is one who does not maintain a regular place of business in this state. A regular place of business shall be deemed to mean and include any bona fide office (other than a statutory office), factory, warehouse, or other space in this state at which the taxpayer is doing business in its own name in a regular and systematic manner and which is continuously maintained, occupied, and used by the taxpayer in carrying on its business through its regular employees regularly in attendance. A temporary office at the site of construction shall not constitute a regular place of business".
In order to effectively implement this legislative change, which became effective on passage, non-resident contractors shall forward such notice of completion by certified or registered mail (in duplicate) to the Division of Taxation.
R. Gary Clark
Tax Administrator

XXXIII. DRUG & ALCOHOL TESTING PROGRAM

In accordance with the Federal Transit Administration Rules 49 CFR 40, 653, and 654, pertaining to prohibited drug use and Contract Service Providers who perform safety-sensitive functions as follows:

- Operation of Revenue Service Vehicles in and Out of Service.
- Dispatch or Control Movement of Revenue Service Vehicles.
- Maintain, Repair and Inspect Revenue Service Vehicle.

The standards they must meet are:

1. Provide each employee performing a RIPTA safety-sensitive function a copy of RIPTA's Prohibited Drug Use and Alcohol Misuse Policy and Procedures. Each Employee must sign and return to RIPTA "Confirmation of Receipt" form.
2. Provide RIPTA with documentation that all employees, both full and part-time, participate in a prohibited drug use testing program in compliance with 49 CFR 653 and an alcohol misuse testing program in compliance with 49 CFR 654. Documentation must be provided which ensures that all testing is performed in compliance with 49 CFR 40.
3. Provide to RIPTA's, by February 1st, following each calendar year, annual Management Information Systems (MIS) reports for submission to the FTA. The MIS form used must be that which is contained in 49 CFR 653 and 654.
4. Identify a contact person responsible for handling all 49 CFR 40, 653 and 654 regulation compliance.

XXXIV. DRUG AND ALCOHOL POLICY ACKNOWLEDGEMENT

CONTRACT SERVICE PROVIDER
ACKNOWLEDGEMENT AND CONFIRMATION OF RECEIPT

Employee Name:_____

Company Name: _____

I have received a copy of Rhode Island Public Transit Authority's Prohibited Drug Use and Alcohol Misuse Policy and Procedures.

Employee
Signature: _____ Date: _____

Return To: Drug and Alcohol Test Coordinator
Department of Human Resources
Rhode Island Public Transit Authority
Room 217
705 Elmwood Avenue
Providence, Rhode Island 02907

XXXV. TELECOMMUNICATIONS CLAUSE

VENDOR hereby acknowledges that the John S. McCain National Defense Authorization Act for Fiscal Year 2019, Pub. L. 115232, § 889 (Aug. 13, 2018) (the Act) prohibits the Agency from procuring certain "covered telecommunications equipment or services," as defined in the Act, in federally assisted procurements and that the instant procurement is a federally assisted procurement subject to that prohibition. VENDOR represents and warrants that it has performed a due diligence review of its supply chain and that no such "covered telecommunications equipment or services" shall be provided to the Agency that would cause the Agency to be in violation of the prohibition contained in the Act.

President/ Vendor Representative

Trafficking in Persons

Contractor agrees that it and its employees that participate in the contract, may not: Engage in severe forms of trafficking in persons during the period of time the contract is in effect, procure a commercial sex act during the period of time that the contract is in effect, or use forced labor in the performance of the contract or subcontracts thereunder. Contractor will inform Agency immediately of any information it receives from any source alleging a violation of the prohibitions listed in section.

President/ Vendor Representative

XXXVI. FEDERAL TAX LIABILITY AND RECENT FELONY CONVICTION

The contractor hereby certifies the following:

Does not have any unpaid Federal tax liability that has been assessed, for which all judicial and administrative remedies have been exhausted or have lapsed, and that is not being paid in a timely manner pursuant to an agreement with the authority responsible for collecting the tax liability; and was not convicted of the felony criminal violation under any Federal law within the preceding 24 months.

The contractor agrees to require all subcontractors to provide this certification and to flow this requirement down to participants at all lower tiers, without regard to the value of any subcontract.

_____

President / Vendor Representative

SECTION 00 10 00 – RFP SOLICITATION SUMMARY

General Information			
Project Name	Pawtucket Passenger Facilities Building		
Project Description	Construction of a 2,600 sf passenger facility building that includes public restrooms, driver restrooms, driver break room, Pawtucket Police sub-station, and an interior waiting area with seating and real-time passenger information screens. Bus Hub and Train Station must remain operational during construction.		
Project Start Date/Length	Summer 2024		
Completion	Fall 2025		
Contract Type	AIA Documents		
Funding Source	☐ Local	☒ State	☐ Federal
DBE Goal	DBE participation encouraged, not required		
Pre-Bid Meeting	**<u>Optional</u>** **Date: May 6, 2024** **Time: 1:00 PM** **Location: 300 Pine Street, Pawtucket, RI 02860**		
Procurement Process Information			
Contract Manager ***All correspondence during RFP must be through the Contract Manager.**	Sheryl Gomes, Contract Manager Purchasing Department, Room 217 705 Elmwood Avenue, Providence, RI 02907 401-781-9400, x1218, sgomes@ripta.com		

Projected RFP Schedule: ***Please refer to RIPTA Procurement for updates to all dates and times.***

Issue Request for Proposals	04/23/2024	
Onsite Pre-Bid Meeting	05/06/2024	1:00 PM
Deadline to submit Questions and Request for Approved Equals to RIPTA	05/13/2024	1:00 PM
Deadline to Submit Proposals	05/23/2024	1:00 PM
Board Consideration of Approval	6/27/24	
Notice of Award to Bidder	6/28/24	
Start of Construction	Summer 2024	
Construction Complete	Fall 2025	

<u>Proposal Evaluation Criteria</u>: Candidates shall be evaluated based upon their qualifications and responsiveness to the RFP. Final selection shall be based on the following: A. Qualifications / Experience / Past performance in comparable projects. B. Proposed Project Timeline C. Proposed Phasing of work. D. Safety Program E. Experience with construction administrative procedures. F. Pricing Respondents can be awarded up to 100 points based on the requested information in the evaluation criteria. Proposals will be evaluated by an evaluation committee and scored based on the established weights set forth.	***<u>Qualifications /Experience /Past Performance in comparable projects – (20 points)</u>*** -Describe your company's qualifications as it relates to the scope of this work (certifications, licenses, etc…) -Provide examples of experience in ongoing and completed projects with similar scope. ***<u>Timeline (20 Points)</u>*** Each proposal should include a project schedule that includes all major milestones, phases of construction, and completion date. A schedule limiting the duration of the project, interruptions of service, and inactivity after mobilization is favorable. ***<u>Phasing Plans (10 Points)</u>*** Each proposal should include an annotated plan view of the construction area and required narrative for each milestone and/or anticipated phases of construction by Contractor. ***<u>Safety Program (10 Points)</u>*** Each proposal should include a brief description of the contractor's commitment to safety and EMR rating. Please include information on Contractor's safety policies, procedures, department, documentation, and personnel training as it relates to the project. ***<u>Experience with Construction Administrative Procedures (15 points)</u>*** Describe your company's experience/procedures in handling the administrative side of construction as it relates to: Construction management software, Scheduling, Submittals, Quality control, Invoicing, Project documentation, Closeout documentation and As-Built drawings ***<u>Pricing (25 Points)</u>*** The respondent can receive up to **25 points** for their proposed pricing and responsiveness to scope. This pricing must be inclusive of all scope outlined in the project RFP, schedule, drawings, and specifications. Proposal will not be considered if scope items are excluded within the proposal.
Basis of Award	This contract will be awarded to the contractor that submits the highest rated proposal of those received. Proposed pricing of project is only a portion of the criteria considered during award. The Rhode Island Public Transit Authority (RIPTA), reserves the right to cancel this RFP, or reject any or all proposals or parts thereof, to waive any formality in same, or accept any proposal deemed to be in the best interest of RIPTA. Any proposal not received by the designated date and time will be determined late and not be considered. Applicants may withdraw their proposals by written request, prior to, but not after the set time for proposal submission. Thereafter, proposals are irrevocable for a period of not less than one-hundred twenty (120) days, and may not be withdrawn or modified.
Liquidated Damages	None
Project Incentives	None

Proposal Contents

Proposal Copies Required:

- One (1) Original
- Three (3) Printed Copies
- One (1) Electronic Copies (thumb drive)

Proposal Content:

- Proposal shall include information that addresses all aspects of the proposal evaluation criteria and any other pertinent information.
- Completed Bid Form "Attachment D"
- Completed forms from RIPTA Procurement's "Request for Proposal" listed below:
  - *Label (affix to package containing proposal response document) second Page of RFP Document.*
  - *Required Company Information Form, Third page of RFP Document.*
  - *Solicitation Form, p.50*
  - *Offer Form, p.51*
  - *Statement of Eligibility Form, p.52*
  - *Affidavit of Non-Collusion Form, p.53*
  - *Certification of Restrictions on Lobbying Form, p.54*
  - *Buy America Certification Requirements For Procurement of Steel or Manufactured Products, p.55*
  - *Buy America Certification Requirements of Procurement of Buses, Rolling Stock, and Associated Equipment, p.56*
  - *Schedule of DBE Participation, p.66 (if applicable)*
  - *DBE Application Agreement, p.67 (if applicable)*
  - *Letter of Intent to Perform as a Sub-contractor, p.68*
  - *DBE Good Faith Effort Summary Sheet, p.69 (if applicable)*
  - *Narrative Explanation for Lack of DBE Participation, p.70 (if applicable)*
  - *Documentation of DBE Utilization F, p.71 (if applicable)*
  - *General Contract Compliance Certificate & Agreement Form (EEO), p.80*
  - *Contractor Apprenticeship Certification Form, p.81*
  - *Certification of Primary Participant Form, p.82*
  - *Debarment Certification, P.83*
  - *Drug & Alcohol Testing Program (if applicable), p.85*

RFP Documents

Attachment A: Drawings - Dated: 4/9/24
Attachment B: Specifications – Dated: 4/9/24
Attachment C: Bid Form
Attachment D: Soil Management Plan – To be released via addendum.

BACKGROUND

RIPTA recorded 97,916 passenger trips at the Pawtucket-Central Falls Transit Center from its opening on January 23, 2023 through December 31, 2023.

SCOPE OF Project:

The construction of the 2,600 SF passenger facilities building with restrooms, waiting area, offices, and break room. Scope includes the building, associated utility connections, sitework, remediation of soils, and all construction administrative paperwork and procedures as specified.

*****END OF SECTION*****

PAWTUCKET-CENTRAL FALLS TRANSIT CENTER

300 PINE STREET PAWTUCKET, RI 02860

CONSTRUCTION DOCUMENTS

RHODE ISLAND PUBLIC TRANSIT AUTHORITY | 04/09/2024 | BL PROJECT No.: 230115

SITE PLAN

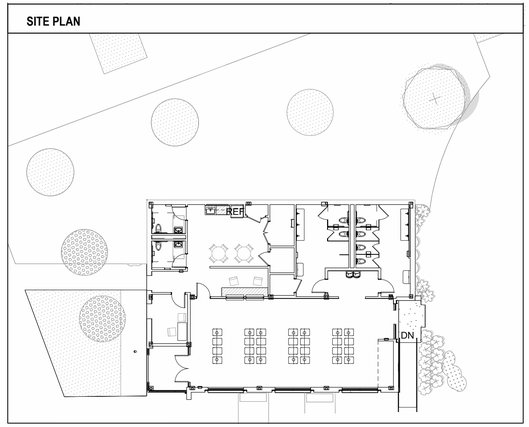

REV	SHEET NUMBER	SHEET NAME
GENERAL		
	G000	COVER
	G001	CODE ANALYSIS
	G002	EGRESS DIAGRAMS
CIVIL		
	CV-1	COVER SHEET
	EX-1	EXISTING CONDITIONS
	GN-1	GENERAL NOTES
	DM-1	DEMOLITION PLAN
	SP-1	SITE PLAN
	GU-1	GRADING, DRAINAGE, UTILITIES PLAN
	LL-1	LANDSCAPE PLAN
	EC-1	EROSION AND SEDIMENTATION CONTROL PLAN
	EC-2	EROSION AND SEDIMENTATION CONTROL NOTES
	EC-3	EROSION AND SEDIMENTATION CONTROL DETAILS
	DN-1	DETAILS SHEET
	DN-2	DETAILS SHEET
STRUCTURAL		
	S001	STRUCTURAL GENERAL NOTES
	S101.1	STRUCTURAL FOUNDATION PLAN
	S101.3	STRUCTURAL ROOF FRAMING PLAN
	S201	STRUCTURAL EXTERIOR ELEVATIONS
	S301	FOUNDATION SECTIONS, DETAILS AND BASEPLATES
	S302	FRAMING SECTIONS
	S501	TYPICAL FOUNDATION DETAILS
	S502	TYPICAL FRAMING DETAILS
	S601	COMPONENT AND CLADDING DIAGRAMS
ARCHITECTURAL		
	A001	GENERAL INFORMATION
	A002	TYPICAL MOUNTING HEIGHTS
	A021	PARTITION TYPES
	A101	FLOOR PLAN
	A102	REFLECTED CEILING PLAN
	A103	OVERALL ROOF PLAN
	A201	3D AERIALS
	A211	EXTERIOR ELEVATIONS
	A301	BUILDING SECTIONS
	A311	WALL SECTIONS
	A312	WALL SECTIONS
	A313	WALL SECTIONS
	A501	TYPICAL EXTERIOR DETAILS
	A551	PLAN DETAILS
	A601	DOOR SCHEDULE, WINDOW SCHEDULE AND DETAILS
	A602	WINDOW DETAILS
	A800	FINISH SCHEDULE / FINISH PRODUCT LIST
	A801	INTERIOR ELEVATIONS
	A851	CASEWORK DETAILS
	A901	MISCELLANEOUS DETAILS

REV	SHEET NUMBER	SHEET NAME
FIRE ALARM		
	FA001	FIRE ALARM NOTES, SYMBOL LEGEND, & ABBREVIATIONS
	FA101.1	OVERALL FIRST FLOOR FIRE ALARM PLAN
	FA501	FIRE ALARM DETAILS
	FA601	FIRE ALARM SYSTEM MATRIX
	FA602	FIRE ALARM RISER DIAGRAMS
PLUMBING		
	P001	PLUMBING NOTES, SYMBOL LEGEND, & ABBREVIATIONS
	P101.1	OVERALL SANITARY, VENT AND STORM PLUMBING PLAN
	P102.1	OVERALL DOMESTIC WATER PLAN
	P103.1	OVERALL ROOF PLUMBING PLAN
	P501	PLUMBING DETAILS
	P502	PLUMBING DETAILS
	P601	PLUMBING SCHEDULES
MECHANICAL		
	M001	MECHANICAL NOTES, SYMBOL LEGEND, & ABBREVIATIONS
	M002	HVAC LOAD CALCULATIONS
	M003	HVAC LOAD CALCULATIONS
	M004	MECHANICAL VENTILATION CALCULATIONS
	M006	MECHANICAL ENERGY COMPLIANCE
	M007	MECHANICAL ENERGY COMPLIANCE
	M101.1	OVERALL FIRST FLOOR MECHANICAL PLAN
	M101.2	OVERALL ROOF MECHANICAL PLAN
	M401	MECHANICAL ENLARGED PLANS
	M501	MECHANICAL DETAILS
	M502	MECHANICAL DETAILS
	M503	MECHANICAL DETAILS
	M601	MECHANICAL SCHEDULES
	M701	MECHANICAL DIAGRAMS
	M702	MECHANICAL DIAGRAMS
ELECTRICAL		
	E001.1	ELECTRICAL NOTES, SYMBOL LEGEND, & ABBREVIATIONS
	E001.2	ELECTRICAL NOTES, SYMBOL LEGEND, & ABBREVIATIONS
	E101.1	OVERALL ELECTRICAL POWER PLAN
	E102.1	OVERALL ELECTRICAL LIGHTING PLAN
	E103.1	OVERALL ROOF ELECTRICAL POWER PLAN
	E501	ELECTRICAL DETAILS
	E502	ELECTRICAL LIGHTING CONTROL DETAILS
	E601	ELECTRICAL SCHEDULES
	E603	ELECTRICAL PANELBOARD SCHEDULES
	E604	ELECTRICAL RISER DIAGRAM
TECHNOLOGY & SECURITY		
	T001	TECH & SEC - SYMBOL LEGEND AND GENERAL NOTES
	T101	TECH & SEC - FIRST FLOOR PLAN
	T201	TECH & SEC - DATA ROOM DETAILS
	T301	TECH & SEC - DETAILS
	T302	TECH & SEC - DETAILS

ALTERNATES

ALTERNATE #1: DELETE FLOOR COLOR PC-2
ALTERNATE #2: BRICK - FIRST THREE COURSES CHANGE TO PRECAST
ALTERNATE #3: FURNISH AND INSTALL FURNITURE

BL Companies
Architecture
Engineering
Environmental
Land Surveying

355 Research Parkway
Meriden, CT 06450
(203) 630-1406
(203) 630-2615 Fax

© 2022 BL COMPANIES, INC. THESE DRAWINGS SHALL NOT BE UTILIZED BY ANY PERSON, FIRM OR CORPORATION WITHOUT THE SPECIFIC WRITTEN PERMISSION OF BL COMPANIES.

PREPARED FOR:

RIPTA
RHODE ISLAND PUBLIC TRANSIT AUTHORITY

CONSULTANTS:

d'agostino & ASSOCIATES

Issues / Revisions

No.	Date	Description

Seals:

CONSTRUCTION DOCUMENTS

CHRISTEN M. ROBBINS
No. 6809
REGISTERED ARCHITECT

Title:

COVER

Sheet No.

G000

C:\Users\LAndreianu\Documents\230115_RIPTA_PassengerFacility_R23_Arch_landreianu.rvt

4/9/2024 4:01:35 PM

© 2022 BL COMPANIES, INC. THESE DRAWINGS SHALL NOT BE UTILIZED BY ANY PERSON, FIRM OR CORPORATION WITHOUT THE SPECIFIC WRITTEN PERMISSION OF BL COMPANIES.

PROJECT DATA:

PROJECT LOCATION: 300 PINE STREET, PAWTUCKET, RI 02860

BUILDING DEPARTMENT: 137 ROOSEVELT AVENUE
PAWTUCKET, RI 02860

APPLICABLE CODES:

ALL CONSTRUCTION SHALL CONFORM WITH THE FOLLOWING CODES:

CODE TYPE:	CODE MODEL:
BUILDING CODE:	SBC-1 RHODE ISLAND STATE BUILDING CODE - IBC 2018 WITH AMENDMENTS
STRUCTURAL CODE:	SBC-1 RHODE ISLAND STATE BUILDING CODE - IBC 2018 WITH AMENDMENTS
PLUMBING CODE:	SBC-3 RHODE ISLAND STATE PLUMBING CODE - IPC 2018 WITH AMENDMENTS
MECHANICAL CODE:	SBC-4 RHODE ISLAND STATE MECHANICAL CODE - IMC 2018 WITH AMENDMENTS
ELECTRICAL CODE:	SBC-5 RHODE ISLAND STATE ELECTRICAL CODE - NFPA 70, 2020 WITH AMENDMENTS
MAINTENANCE CODE:	SBC-5 RHODE ISLAND STATE PROPERTY MAINTENANCE CODE - IPMC 2018 WITH AMENDMENTS
ENERGY CODE:	SBC-8 RHODE ISLAND STATE ENERGY CONSERVATION CODE - IECC 2018 WITH AMENDMENTS
FIRE / LIFE SAFETY CODE:	NFPA 1, 2018 & NFPA 101, 2018 (RHODE ISLAND FIRE CODE)
ACCESSIBILITY CODE:	ADAAG (RHODE ISLAND STATE BUILDING CODE),ANSI A117-1, 2009
GAS CODE:	SBC-19 RHODE ISLAND STATE FUEL GAS CODE - IFGC 2018 WITH AMENDMENTS
BOILER CODE:	ASME BOILER AND PRESSURE VESSEL CODE
FIRE ALARM CODE:	RI FIRE ALARM NFPA 72

CHAPTER 3 - USE & OCCUPANCY CLASSIFICATION:

302.1 - CLASSIFICATION: PASSENGER FACILITIES BUILDING

GROUP	IBC SECTION	DESCRIPTION OF OCCUPANCY		PROPOSED AREA
		DESCRIPTION	CLASSIFICATION	
B / BUSINESS:	304	BREAKROOM & OFFICE	ACCESSORY	582 SF
A3 / ASSEMBLY	303	WAITING	MAIN USE	1,049 SF

CHAPTER 5 - GENERAL BUILDING HEIGHTS & AREAS:

CONSTRUCTION TYPE: CONSTRUCTION TYPE IIB

SPRINKLER SYSTEM: NOT SPRINKLERED(NS)

ALLOWABLE BUILDING HEIGHT:

	ALLOWABLE BUILDING HEIGHT		PROPOSED BUILDING HEIGHT	
OCCUPANCY	FEET (T504.3)	STORIES (T504.4)	FEET	STORIES
A ASSEMBLY	55'	2	15'	1

ALLOWABLE BUILDING AREA: SINGLE OCUPANCY 1 STORY BUILDINGS, ALLOWABLE AREA PER TABLE 506.2 = 9.500 SF

PROPOSED BUILDING AREA: 2,291 SF

CHAPTER 6 - TYPE OF CONSTRUCTION:

CONSTRUCTION CLASSIFICATION: SECTIONS 601 & 602

NR = NO RATING
N/A = NOT APPLICABLE, CONDITION NOT PRESENT IN DESIGN

FIRE RESISTANCE RATING REQUIREMENTS (TABLE 601)

BUILDING ELEMENT		REQUIRED FIRE RATING (HOURS)	PROPOSED FIRE RATING (HOURS)
PRIMARY STRUCTURE FRAME		0 HR (a)	0 HR
BEARING WALLS - EXTERIOR (e) (f)		0 HR	0 HR
BEARING WALLS -INTERIOR		0 HR (a)	0 HR
NONBEARING WALLS AND PARTITIONS - EXTERIOR (TABLE 602)	X < 5	1 HR	0 HR
	5 ≤ X < 10	1 HR	0 HR
	10 ≤ X < 30	0 HR	0 HR
NONBEARING WALLS AND PARTITIONS - INTERIOR (d)		0 HR	0 HR
FLOOR CONSTRUCTION AND ASSOCIATED SECONDARY MEMBERS (SEE SECTION 202)		0 HR	0 HR
ROOF CONSTRUCTION AND ASSOCIATED SECONDARY MEMBERS (SEE SECTION 202)		0 HR (b)	0 HR

STRUCTURAL FRAME AND BEARING WALLS PERMITTED TO BE REDUCED BY 1-HOUR WHERE THEY ARE ONLY SUPPORTING ROOF

CHAPTER 7 - FIRE RESISTANCE RATED CONSTRUCTION

TABLE 705.8 - NON-SPRINKLERED

MAXIMUM AREA OF EXTERIOR WALL OPENINGS BASED ON FIRE SEPARATION DISTANCE AND DEGREE OF OPENING PROTECTION

EXTERIOR WALL	FIRE SEPARATION DISTANCE (feet)	DEGREE OF OPENING PROTECTION	ALLOWABLE AREA	AREA PROVIDED (MAX % IN ANY ONE STORY)
NORTH WALL	30'-0" or GREATER	UNPROTECTED, NOT SPRINKLERED	NO LIMIT	
EAST WALL	30'-0" or GREATER	UNPROTECTED, NOT SPRINKLERED	NO LIMIT	
SOUTH WALL	30'-0" or GREATER	UNPROTECTED, NOT SPRINKLERED	NO LIMIT	
WEST WALL	30'-0" or GREATER	UNPROTECTED, NOT SPRINKLERED	NO LIMIT	

CHAPTER 8 - INTERIOR FINISHES

OCCUPANCY TYPE - A-3	MINIMUM CLASS FINISH ALLOWED	MINIMUM CLASS FINISH PROVIDED
VERTICAL EXITS & EXIT PASSAGEWAYS -	CLASS A	
EXIT ACCESS CORRIDORS & OTHER EXITS -	CLASS A	
ROOMS AND ENCLOSED SPACES -	CLASS C	

CHAPTER 9 - FIRE PROTECTION SYSTEM

AUTOMATIC SPRINKLER SYSTEM PROVIDED	NO
AUTOMATIC SPRINKLER SYSTEM MONITORING AND ALARMS WILL BE PROVIDED	NO
PORTABLE FIRE EXTINGUISHERS - SHALL BE PROVIDED PER THIS SECTION	YES
A FIRE COMMAND CENTER REQUIRED	NO

CHAPTER 10 - MEANS OF EGRESS

GROUP	MAXIMUM TRAVEL DISTANCE (TABLE 10 17.2)	DEAD END CORRIDOR (1020.4)	CORRIDOR WIDTH	COMMON PATH OF TRAVEL (TABLE 1006.2.1)
B / BUSINESS (NON-SPRINKLED)	300'	50'	MIN. 44"	100'
A3 / ASSEMBLY (NON-SPRINKLED)	250'	20'	MIN. 44"	75'

SEE PLAN ON G002 FOR ACTUALS

SECTION 1004 OCCUPANT LOAD (See table provided below)

1005.3.2 OTHER EGRESS COMPONENTS. THE CAPACITY OF MEANS OF EGRESS COMPONENTS OTHER THAN STAIRWAYS SHALL BE 0.2 INCHES PER OCCUPANT.

1006.2.1 TWO EXITS SHALL BE PROVIDED WHERE TRAVEL DISTANCE AND OCCUPANT LOAD EXCEED VALUES IN TABLE 1006.2.1

CORRIDOR FIRE RESISTANCE RATING - TABLE 1020.1
OCCUPANCY (A, B, S) WITH OCCUPANCY > 30 - WITH SPRINKLERS - 0 HOURS

OCCUPANCY TABLE

FUNCTION	OCCUPANCY TYPE	AREA SF	LOAD FACTOR SF/PERSON (GROSS/NET)	OCCUPANT LOAD	NUMBER OF EXITS
MAIN OFFICE AREA					
B - BUSINESS OCCUPANCY	B	473 SF	150 GROSS	4	2
A3 - ASSEMBLY OCCUPANCY, STANDING SPACE	A3	909 SF	5 NET	213	2
MECHANICAL	ACCESSORY	116 SF	300 GROSS	4	
TOTAL OCCUPIABLE AREA		1,501 SF		221	4

NOTE:
1. NO INDIVIDUAL ASSEMBLY SPACES EXCEED THE ALLOWED AREA IN SECTION 506.2 FOR UNSPRINKLERED BUILDINGS.

PLUMBING FIXTURE CALCULATIONS

USE GROUP / OCCUPANCY	OCCUPANT LOAD	WC		LAV		ALLOWABLE URINAL	DRINKING FOUNTAIN	SERVICE SINK	BATHTUB / SHOWER
		M	F	M	F				
OFFICE - 'B'	4	1	1	1	1	0	1	-	-
ASSEMBLY - 'A3'	214	1	1	1	1	MAX 67%	1	1	-
TOTAL REQUIRED		2	2	2	2	-	2	1	-
TOTAL PROVIDED		3	5	4	4	2	2	1	-

DEFERRED SUBMITTALS

DEFERRED SUBMITTALS THAT ARE NOT SUBMITTED AT THE TIME OF THE APPLICATION MUST HAVE THE PRIOR APPROVAL OF THE BUILDING OFFICIAL. THE FOLLOWING IS A LIST OF DEFERRED SUBMITTALS FOR REVIEW BY THE DESIGN PROFESSIONAL IN CHARGE OF THEIR DEVELOPMENT WHO SHALL REVIEW AND FORWARD THEM TO THE BUILDING OFFICIAL WITH NOTATION INDICATING THEY HAVE BEEN REVIEWED AND ARE IN GENERAL CONFORMANCE WITH THE DESIGN OF THE BUILDING AND TO ALL APPLICABLE CODES.

1. STEEL JOISTS, TRUSSES AND GIRDERS CONFORMING TO SJI STANDARD SPECIFICATIONS.
2. ANCHOR DESIGN FOR ELECTRICAL EQUIPMENT REQUIRED
3. STOREFRONT GLAZING SYSTEMS
4. COLD FORMED METAL FRAMING

THERMAL ENVELOPE

THERMAL ZONE LOCATION: CLIMATE ZONE 5	REQUIRED (R-VALUE)	PROVIDED (R-VALUE)
ROOF (ENTIRELY ABOVE DECK)	R-30	R-30
WALLS (METAL FRAMED)	R-13 + R-7.5ci	R-19 + R-7.5ci
WALLS (BELOW GRADE)	R-7.5ci	R-7.5ci

1009.1 ACCESSIBLE MEANS OF EGRESS
ACCESSIBLE MEANS OF EGRESS SHALL COMPLY WITH THIS SECTION. ACCESSIBLE SPACES SHALL BE PROVIDED WITH NOT LESS THAN ONE ACCESSIBLE MEANS OF EGRESS, WHERE MORE THAN ONE MEANS OF EGRESS ARE REQUIRED BY SECTION 1006.2 OR 1006.3 FROM ANY ACCESSIBLE SPACE, EACH ACCESSIBLE PORTION OF THE SPACE SHALL BE SERVED BY NOT LESS THAN TWO ACCESSIBLE MEANS OF EGRESS.

EXCEPTIONS
2. ONE ACCESSIBLE MEANS OF EGRESS IS REQUIRED FROM AN ACCESSIBLE LEVEL IN ACCORDANCE WITH SECTION 1009.3, 1009.4 OR 1009.5.

NFPA CODE ANALYSIS

CLASSIFICATION OF OCCUPANCY:

6.1.2 ASSEMBLY

7.2.1 DOOR OPENINGS: COMPLY REFER TO A601 FOR DOORS SIZES

7.3.1 OCCUPANT LOAD
7.3.1.2" OCCUPANT LOAD FACTOR
ASSEMBLY 7 SF FT PER PERSON - REFER TO OCCUPANCY TABLE THIS SHEET

9.7 AUTOMATIC SPRINKLERS : NOT REQUIRED

CHAPTER 12 NEW ASSEMBLY OCCUPANCIES:

12.1.2 CONDITIONS TO BE ASSESSED.

12.2.3.6.1 EVERY ASSEMBLY OCCUPANCY SHALL BE PROVIDED WITH A MAIN ENTRANCE/EXIT.

12.2.10.1 MEANS OF EGRESS SHALL BE PROVIDED WITH SIGNS IN ACCORDANCE WITH SECTION 7.10.

12.3.3.3 ASSEMBLY AREAS INTERIOR WALL AND CEILING FINISH MATERIALS COMPLYING WITH SECTION 10.2 SHALL BE CLASS A OR CLASS B IN GENERAL ASSEMBLY AREAS HAVING OCCUPANT LOADS OF MORE THAN 300 AND SHALL BE CLASS A, CLASS B, OR CLASS C IN ASSEMBLY AREAS HAVING OCCUPANT LOADS OF 300 OR FEWER.

12.3.5.2 ANY BUILDING CONTAINING ONE OR MORE ASSEMBLY OCCUPANCIES WHERE THE AGGREGATE OCCUPANT LOAD OF THE ASSEMBLY OCCUPANCIES EXCEEDS 300 SHALL BE PROTECTED BY AN APPROVED, SUPERVISED AUTOMATIC SPRINKLER SYSTEM IN ACCORDANCE WITH SECTION 9.7 AS FOLLOWS (SEE ALSO 12.1.6, 12.2.6, 12.3.2, AND 12.3.6):

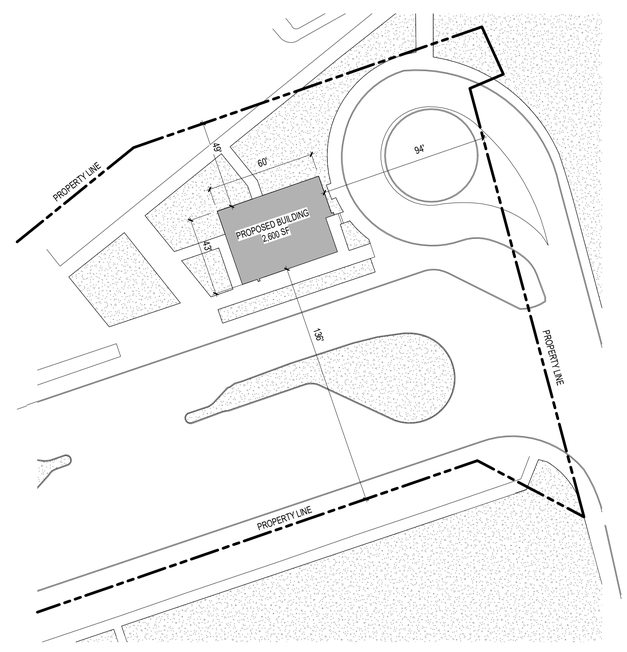

1 SITE PLAN
1" = 40'-0"

N

Architecture
Engineering
Environmental
Land Surveying
BL Companies
355 Research Parkway
Meriden, CT 06450
(203) 630-1406
(203) 630-2615 Fax

CHRISTEN M. ROBINSON
REGISTERED ARCHITECT

PAWTUCKET-CENTRAL FALLS TRANSIT CENTER
300 PINE STREET PAWTUCKET, RI 02860

REVISIONS

NO	DATE	DESCRIPTION

Designed:	CR
Drawn:	LA
Reviewed:	JJ
Project No.:	230115
Date:	04/09/2024

Issued for:
CONSTRUCTION DOCUMENTS

Title:
CODE ANALYSIS

Sheet No.
G001

C:\Users\LAndreianu\Documents\2301115_RIPTA_PassengerFacility_R23_Arch_landreianu.rvt
4/9/2024 4:01:36 PM

© 2022 BL COMPANIES, INC. THESE DRAWINGS SHALL NOT BE UTILIZED BY ANY PERSON, FIRM OR CORPORATION WITHOUT THE SPECIFIC WRITTEN PERMISSION OF BL COMPANIES.

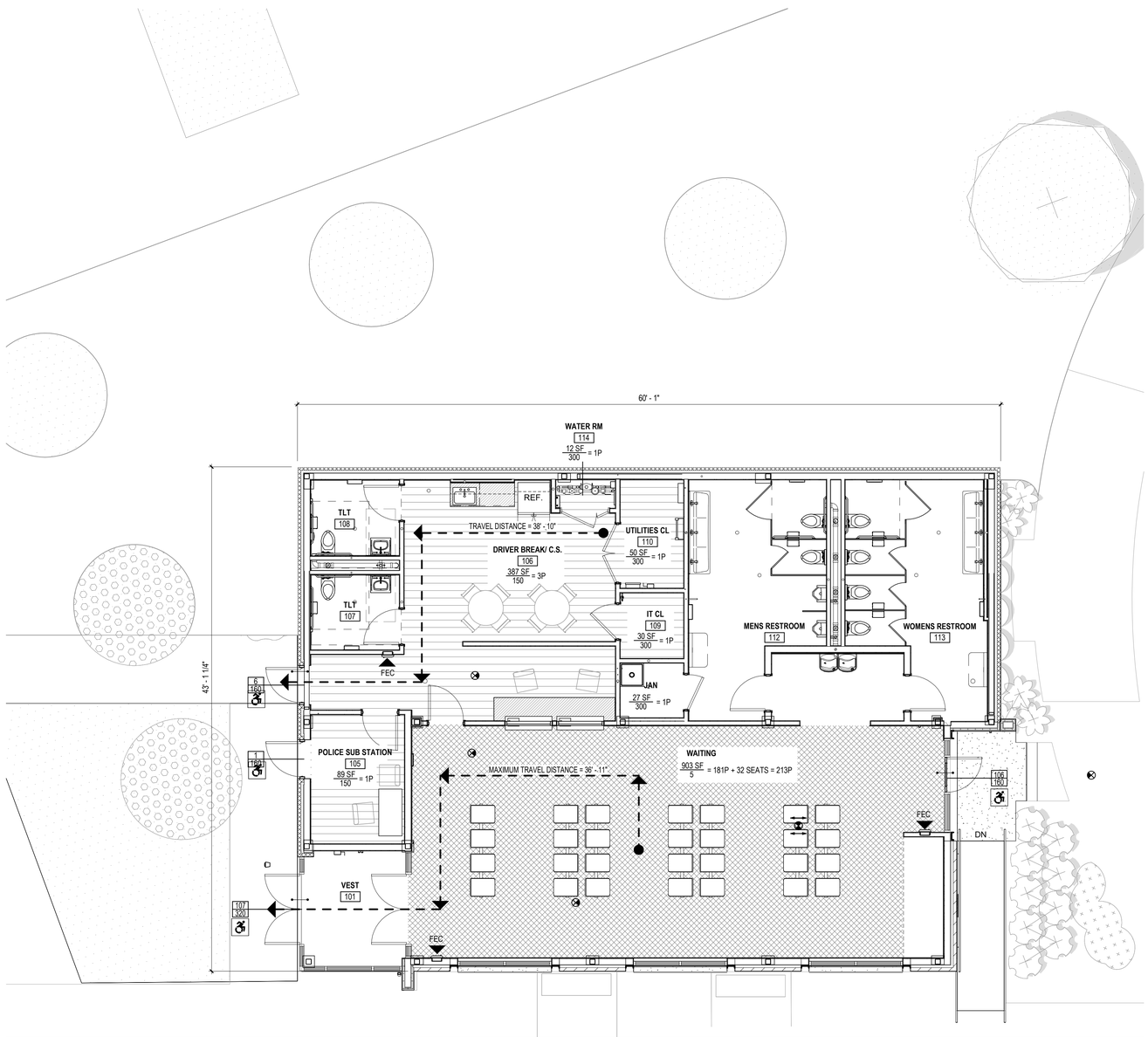

1 EGRESS PLAN

3/16" = 1'-0"

COMcheck Software Version COMcheckWeb

Envelope Compliance Certificate

Project Information

Energy Code: 2018 IECC
Project Title: 2301115 PAWTUCKET-CENTRAL FALLS TRANSIT CENTER
Location: Pawtucket, Rhode Island
Climate Zone: 5a
Project Type: New Construction
Vertical Glazing / Wall Area: 17%

Construction Site:
300 PINE STREET
PAWTUCKET, Rhode Island 02860

Owner/Agent:
RHODE ISLAND PUBLIC TRANSIT AUTHORITY
705 ELMWOOD AVE
PROVIDENCE, Rhode Island 02907

Designer/Contractor:
Luana Andreianu
BL Companies
2346 Post Road Suite 100
Warwick, Rhode Island 02886
4015932039
landreianu@blcompanies.com

Additional Efficiency Package(s)

Credits: 1.0 Required 1.0 Proposed
Reduced Lighting Power, 1.0 credit

Building Area	Floor Area
1-Transportation : Nonresidential	2291

Envelope Assemblies

Assembly	Gross Area or Perimeter	Cavity R-Value	Cont. R-Value	Proposed U-Factor	Budget U-Factor(a)
Roof: Insulation Entirely Above Deck, [Bldg. Use 1 - Transportation]	2668	---	35.0	0.028	0.032
Floor: Unheated Slab-On-Grade, Vertical 2 ft., [Bldg. Use 1 - Transportation] (c)	80	---	7.5	0.560	0.540
NORTH					
Ext. Wall: Steel-Framed, 16in. o.c., [Bldg. Use 1 - Transportation]	678	21.0	7.5	0.059	0.064
EAST					
Ext. Wall: Steel-Framed, 16in. o.c., [Bldg. Use 1 - Transportation]	560	21.0	7.5	0.059	0.064
SF2: Metal Frame with Thermal Break: Fixed, Perf. Specs.: Product ID Solarban 60, clear, SHGC 0.38, PF 0.43, [Bldg. Use 1 - Transportation] (b)	47	---	---	0.440	0.380
Door 100: Glass (over 50% glazing): Metal Frame, Entrance Door, Perf. Specs.: Product ID Solarban 60, clear, SHGC 0.38, PF 0.43, [Bldg. Use 1 - Transportation] (b)	21	---	---	0.440	0.770
SOUTH					
Ext. Wall: Steel-Framed, 16in. o.c., [Bldg. Use 1 - Transportation]	869	21.0	7.5	0.059	0.064
SF3: Metal Frame with Thermal Break: Fixed, Perf. Specs.: Product ID Solarban 60, clear, SHGC 0.38, PF 0.37, [Bldg. Use 1 - Transportation] (b)	75	---	---	0.440	0.380
SF1: Metal Frame with Thermal Break: Fixed, Perf. Specs.: Product ID Solarban 60, clear, SHGC 0.38, PF 0.37, [Bldg. Use 1 - Transportation] (b)	76	---	---	0.440	0.380

Assembly	Gross Area or Perimeter	Cavity R-Value	Cont. R-Value	Proposed U-Factor	Budget U-Factor(a)
SF1: Metal Frame with Thermal Break: Fixed, Perf. Specs.: Product ID Solarban 60, clear, SHGC 0.38, PF 0.37, [Bldg. Use 1 - Transportation] (b)	76	---	---	0.440	0.380
SF1: Metal Frame with Thermal Break: Fixed, Perf. Specs.: Product ID Solarban 60, clear, SHGC 0.38, PF 0.37, [Bldg. Use 1 - Transportation] (b)	76	---	---	0.440	0.380
WEST					
Ext. Wall: Steel-Framed, 16in. o.c., [Bldg. Use 1 - Transportation]	561	21.0	7.5	0.059	0.064
Door 101A: Glass (over 50% glazing): Metal Frame, Entrance Door, Perf. Specs.: Product ID Solarban 60, clear, SHGC 0.38, PF 0.06, [Bldg. Use 1 - Transportation] (b)	48	---	---	0.440	0.770
Door 105A: Insulated Metal, Swinging, [Bldg. Use 1 - Transportation]	24	---	---	0.370	0.370
Door 106A: Insulated Metal, Swinging, [Bldg. Use 1 - Transportation]	24	---	---	0.370	0.370
SF4: Metal Frame with Thermal Break: Fixed, Perf. Specs.: Product ID Solarban 60, clear, SHGC 0.38, PF 0.06, [Bldg. Use 1 - Transportation] (b)	46	---	---	0.440	0.380

(a) Budget U-factors are used for software baseline calculations ONLY, and are not code requirements.
(b) Fenestration product performance must be certified in accordance with NFRC and requires supporting documentation.
(c) Slab-On-Grade proposed and budget U-factors shown in table are F-factors.

Envelope PASSES: Design 4% better than code

Envelope Compliance Statement

Compliance Statement: The proposed envelope design represented in this document is consistent with the building plans, specifications, and other calculations submitted with this permit application. The proposed envelope systems have been designed to meet the 2018 IECC requirements in COMcheck Version COMcheckWeb and to comply with any applicable mandatory requirements listed in the Inspection Checklist.

Matt Colson - Job Captain — Name - Title
Signature
03/18/2024 — Date

LIFE SAFETY LEGEND

OCCUPANCY LOADS

ROOM NAME
101
150 SF / 100 = 15P
ROOM SQUARE FOOTAGE
OCCUPANCY LOAD
FLOOR AREA IN SQ. FT. / OCCUPANT

DOORS: 1000 / 1000 — ACTUAL EGRESS LOAD / ALLOWABLE EGRESS LOAD
STAIRS

SYMBOLS

CUMULATIVE OCCUPANCY LOAD ON EGRESS ROUTE
MAXIMUM TRAVEL DISTANCE TO FURTHEST EXIT (250' MAX - NON-SPRINKLED OR SPRINKLED)
EXIT ACCESS (SEPARATION OF EXITS)
ACCESSIBLE EXIT
FLUSH CONDITION (ELEV CHANGE NOT GREATER THAN 1/2")
FEC — SEMI-RECESSED FIRE EXTINGUISHER CABINET. VERIFY FINAL LOCATIONS AND QUANTITY WITH FIRE MARSHAL.
BUSINESS
ASSEMBLY, FIXED SEATS
ASSEMBLY, STANDING SPACE
UTILITY

TRUE NORTH

Architecture Engineering Environmental Land Surveying
BL Companies
355 Research Parkway
Meriden, CT 06450
(203) 630-1406
(203) 630-2615 Fax

CHRISTEN M. ROBINSON — REGISTERED ARCHITECT

PAWTUCKET-CENTRAL FALLS TRANSIT CENTER
300 PINE STREET PAWTUCKET, RI 02860

REVISIONS

NO	DATE	DESCRIPTION

Designed:	CR
Drawn:	LA
Reviewed:	JJ
Project No.:	230115
Date:	04/09/2024

Issued for:
CONSTRUCTION DOCUMENTS

Title:
EGRESS DIAGRAMS

Sheet No.
G002

4/9/2024 4:01:40 PM C:\Users\LAndreianu\Documents\2301115_RIPTA_PassengerFacility_R23_Arch_landreianu.rvt

© 2022 BL COMPANIES, INC. THESE DRAWINGS SHALL NOT BE UTILIZED BY ANY PERSON, FIRM OR CORPORATION WITHOUT THE SPECIFIC WRITTEN PERMISSION OF BL COMPANIES.

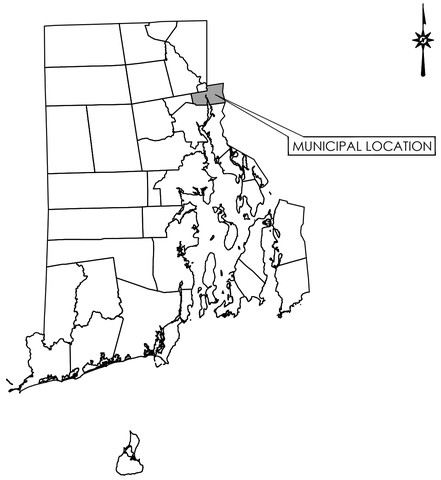

LOCATION MAP

N.T.S.

ISSUED FOR CONSTRUCTION FOR PROPOSED PASSENGER FACILITIES BUILDING

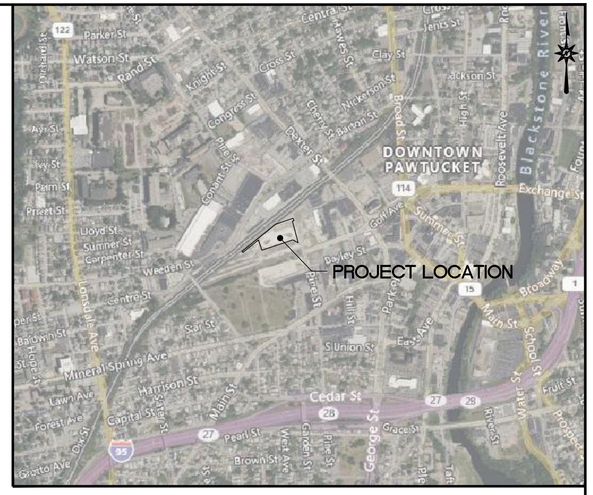

VICINITY MAP

SCALE: 1"=800'

PAWTUCKET PASSENGER FACILITIES BUILDING
300 PINE STREET
PAWTUCKET, RHODE ISLAND

PREPARED FOR:

RHODE ISLAND PUBLIC TRANSIT AUTHORITY
705 ELMWOOD AVE
PROVIDENCE, RHODE ISLAND

RHODE ISLAND PUBLIC TRANSIT AUTHORITY

PREPARED BY:

BL Companies

ARCHITECTURE
ENGINEERING
ENVIRONMENTAL
LAND SURVEYING

100 CONSTITUTION PLAZA, 10TH FLOOR
HARTFORD, CONNECTICUT 06103
(860) 249-2200
(860) 249-2400 Fax

CONTENTS

Sheet Number	Sheet Title
CV-1	COVER SHEET
EX-1	EXISTING CONDITIONS
GN-1	GENERAL NOTES
DM-1	DEMOLITION PLAN
SP-1	SITE PLAN
GU-1	GRADING, DRAINAGE, UTILITIES PLAN
LL-1	LANDSCAPE PLAN
PH-1	PHASING PLAN
EC-1	EROSION AND SEDIMENTATION CONTROL PLAN
EC-2	EROSION AND SEDIMENTATION CONTROL NOTES
EC-3	EROSION AND SEDIMENTATION CONTROL DETAILS
DN-1	DETAILS SHEET
DN-2	DETAILS SHEET

DEVELOPER:

RHODE ISLAND PUBLIC TRANSIT AUTHORITY
705 ELMWOOD AVE
PROVIDENCE, RI 02907

OWNER:

RHODE ISLAND PUBLIC TRANSIT AUTHORITY
705 ELMWOOD AVE
PROVIDENCE, RI 02907

SUZANNE M. KING
No. 10040
REGISTERED PROFESSIONAL ENGINEER
CIVIL

DATES

ISSUE DATE: APRIL 9, 2024
REVISION:

CAD FILE: CV230111501

©2024 BL COMPANIES, INC. THESE DRAWINGS SHALL NOT BE UTILIZED BY ANY PERSON, FIRM OR CORPORATION WITHOUT THE SPECIFIC WRITTEN PERMISSION OF BL COMPANIES.

LOCATION MAP

NOT TO SCALE

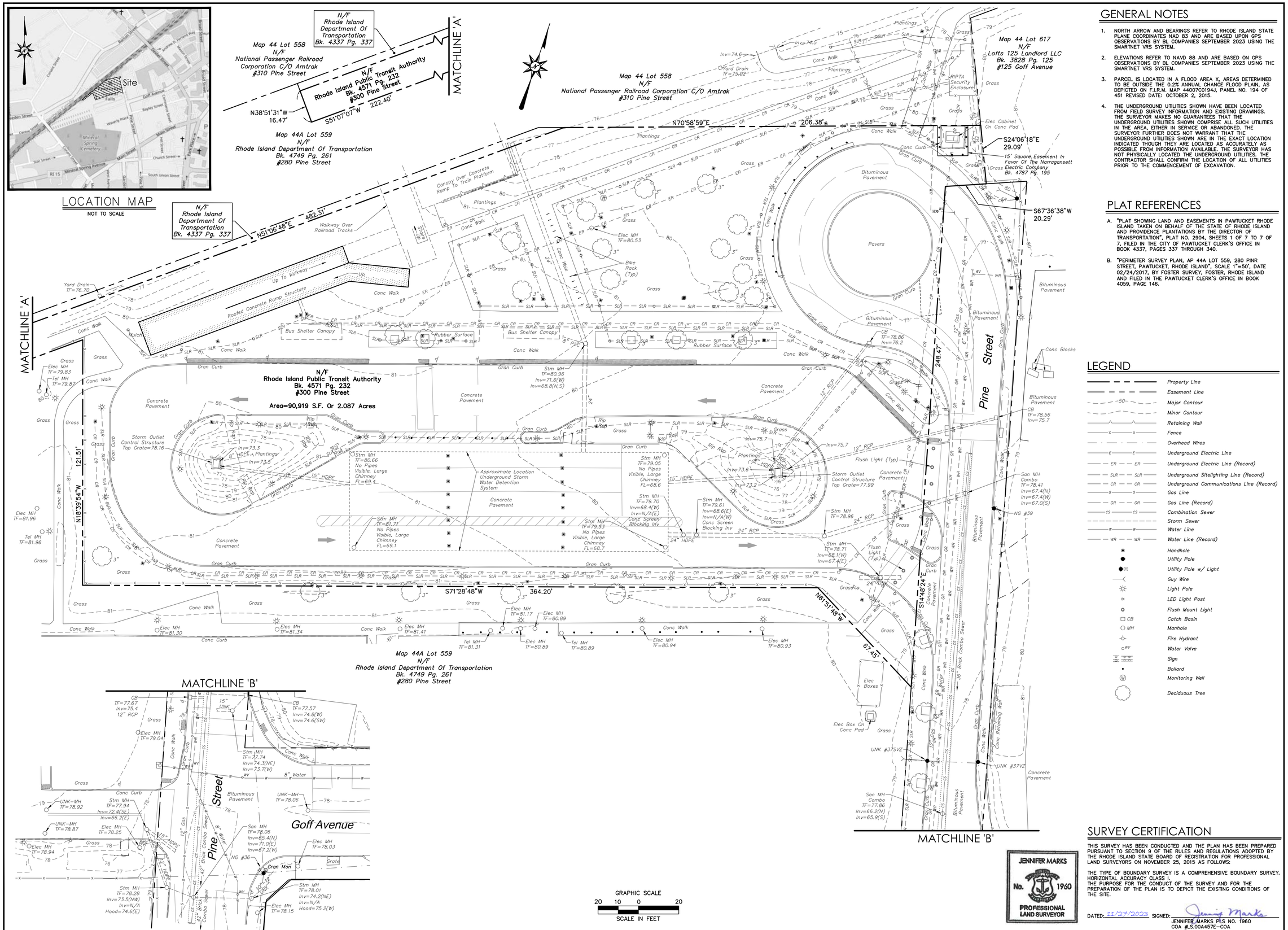

GENERAL NOTES

1. NORTH ARROW AND BEARINGS REFER TO RHODE ISLAND STATE PLANE COORDINATES NAD 83 AND ARE BASED UPON GPS OBSERVATIONS BY BL COMPANIES SEPTEMBER 2023 USING THE SMARTNET VRS SYSTEM.
2. ELEVATIONS REFER TO NAVD 88 AND ARE BASED ON GPS OBSERVATIONS BY BL COMPANIES SEPTEMBER 2023 USING THE SMARTNET VRS SYSTEM.
3. PARCEL IS LOCATED IN A FLOOD AREA X, AREAS DETERMINED TO BE OUTSIDE THE 0.2% ANNUAL CHANCE FLOOD PLAIN, AS DEPICTED ON F.I.R.M. MAP 44007C0194J, PANEL NO. 194 OF 451 REVISED DATE: OCTOBER 2, 2015.
4. THE UNDERGROUND UTILITIES SHOWN HAVE BEEN LOCATED FROM FIELD SURVEY INFORMATION AND EXISTING DRAWINGS. THE SURVEYOR MAKES NO GUARANTEES THAT THE UNDERGROUND UTILITIES SHOWN COMPRISE ALL SUCH UTILITIES IN THE AREA, EITHER IN SERVICE OR ABANDONED. THE SURVEYOR FURTHER DOES NOT WARRANT THAT THE UNDERGROUND UTILITIES SHOWN ARE IN THE EXACT LOCATION INDICATED THOUGH THEY ARE LOCATED AS ACCURATELY AS POSSIBLE FROM INFORMATION AVAILABLE. THE SURVEYOR HAS NOT PHYSICALLY LOCATED THE UNDERGROUND UTILITIES. THE CONTRACTOR SHALL CONFIRM THE LOCATION OF ALL UTILITIES PRIOR TO THE COMMENCEMENT OF EXCAVATION.

PLAT REFERENCES

A. "PLAT SHOWING LAND AND EASEMENTS IN PAWTUCKET RHODE ISLAND TAKEN ON BEHALF OF THE STATE OF RHODE ISLAND AND PROVIDENCE PLANTATIONS BY THE DIRECTOR OF TRANSPORTATION", PLAT NO. 2904, SHEETS 1 OF 7 TO 7 OF 7, FILED IN THE CITY OF PAWTUCKET CLERK'S OFFICE IN BOOK 4337, PAGES 337 THROUGH 340.

B. "PERIMETER SURVEY PLAN, AP 44A LOT 559, 280 PINR STREET, PAWTUCKET, RHODE ISLAND", SCALE 1"=50', DATE 02/24/2017, BY FOSTER SURVEY, FOSTER, RHODE ISLAND AND FILED IN THE PAWTUCKET CLERK'S OFFICE IN BOOK 4059, PAGE 146.

LEGEND

- Property Line
- Easement Line
- Major Contour
- Minor Contour
- Retaining Wall
- Fence
- Overhead Wires
- Underground Electric Line
- Underground Electric Line (Record)
- Underground Sitelighting Line (Record)
- Underground Communications Line (Record)
- Gas Line
- Gas Line (Record)
- Combination Sewer
- Storm Sewer
- Water Line
- Water Line (Record)
- Handhole
- Utility Pole
- Utility Pole w/ Light
- Guy Wire
- Light Pole
- LED Light Post
- Flush Mount Light
- CB Catch Basin
- MH Manhole
- Fire Hydrant
- WV Water Valve
- Sign
- Bollard
- Monitoring Well
- Deciduous Tree

SURVEY CERTIFICATION

THIS SURVEY HAS BEEN CONDUCTED AND THE PLAN HAS BEEN PREPARED PURSUANT TO SECTION 9 OF THE RULES AND REGULATIONS ADOPTED BY THE RHODE ISLAND STATE BOARD OF REGISTRATION FOR PROFESSIONAL LAND SURVEYORS ON NOVEMBER 25, 2015 AS FOLLOWS:

THE TYPE OF BOUNDARY SURVEY IS A COMPREHENSIVE BOUNDARY SURVEY. HORIZONTAL ACCURACY CLASS I.
THE PURPOSE FOR THE CONDUCT OF THE SURVEY AND FOR THE PREPARATION OF THE PLAN IS TO DEPICT THE EXISTING CONDITIONS OF THE SITE.

JENNIFER MARKS
No. 1960
PROFESSIONAL LAND SURVEYOR

DATED: 11/27/2023 SIGNED: Jennifer Marks
JENNIFER MARKS PLS NO. 1960
COA #LS.00A457E-COA

Architecture
Engineering
Environmental
Land Surveying
BL Companies
355 Research Parkway
Meriden, CT 06450
(203) 630-1406
(203) 630-2615 Fax

LAND OF
RHODE ISLAND PUBLIC TRANSIT AUTHORITY
300 PINE STREET
PAWTUCKET, RHODE ISLAND

REVISIONS

No.	Date	Desc.

Surveyed	SB
Drawn	JS.
Reviewed	JM
Scale	1"=20'
Project No.	2301115
Date	10/04/2023
Field Book	582
CAD File:	EX230111501

Title
EXISTING CONDITIONS MAP

Sheet No.
EX-1

Xref (s) : XY230111501

Nov 27, 2023 7:43am jkrieger G:\JOBS23\(X)\230111\5\DWG\EX230111501.dwg
Layout: EX-1 24x36 Plot

© 2023 BL COMPANIES, INC. THESE DRAWINGS SHALL NOT BE UTILIZED BY ANY PERSON, FIRM OR CORPORATION WITHOUT THE SPECIFIC WRITTEN PERMISSION OF BL COMPANIES.

SITE WORK GENERAL NOTES

1. THESE PLANS ARE FOR PERMITTING PURPOSES ONLY AND ARE NOT FOR CONSTRUCTION.

2. ALL CONSTRUCTION SHALL COMPLY WITH THE PROJECT SPECIFICATION MANUAL; CORPORATION STANDARDS, MUNICIPAL STANDARDS AND SPECIFICATIONS, RHODE ISLAND DEPARTMENT OF TRANSPORTATION STANDARDS AND SPECIFICATIONS, 2010 ADA STANDARDS, AND STATE BUILDING CODE IN THE ABOVE REFERENCED INCREASING HIERARCHY. IF SPECIFICATIONS ARE IN CONFLICT, THE MORE STRINGENT SPECIFICATION SHALL APPLY. ALL CONSTRUCTION SHALL BE PERFORMED IN ACCORDANCE WITH ALL APPLICABLE OSHA, FEDERAL, STATE AND LOCAL REGULATIONS.

3. REFER TO OTHER PLANS BY OTHER DISCIPLINES, DETAILS AND PROJECT MANUAL FOR ADDITIONAL INFORMATION. THE CONTRACTOR SHALL VERIFY ALL SITE AND BUILDING CONDITIONS IN THE FIELD AND CONTACT THE CIVIL ENGINEER AND ARCHITECT IF THERE ARE ANY QUESTIONS OR CONFLICTS REGARDING THE CONSTRUCTION DOCUMENTS AND/OR FIELD CONDITIONS, SO THAT APPROPRIATE REVISIONS CAN BE MADE PRIOR TO BIDDING. ANY CONFLICT BETWEEN THE DRAWINGS AND SPECIFICATIONS SHALL BE CONFIRMED WITH THE OWNER'S CONSTRUCTION MANAGER PRIOR TO BIDDING.

4. DO NOT INTERRUPT EXISTING UTILITIES SERVICING FACILITIES OCCUPIED AND USED BY THE OWNER OR OTHERS DURING OCCUPIED HOURS EXCEPT WHEN SUCH INTERRUPTIONS HAVE BEEN AUTHORIZED IN WRITING BY THE OWNER AND THE LOCAL MUNICIPALITIES. INTERRUPTIONS SHALL ONLY OCCUR AFTER ACCEPTABLE TEMPORARY SERVICE HAS BEEN PROVIDED.

5. THE CONTRACTOR SHALL ABIDE BY ALL OSHA, FEDERAL, STATE, AND LOCAL REGULATIONS WHEN OPERATING CRANES, BOOMS, HOISTS, ETC. IN CLOSE PROXIMITY TO OVERHEAD ELECTRIC LINES. IF CONTRACTOR MUST OPERATE EQUIPMENT CLOSE TO ELECTRIC LINES, CONTACT POWER COMPANY TO MAKE ARRANGEMENTS FOR PROPER SAFEGUARDS. ANY UTILITY COMPANY FEES SHALL BE PAID FOR BY THE CONTRACTOR.

6. THE CONTRACTOR SHALL PROVIDE AS-BUILT RECORD DRAWINGS OF ALL CONSTRUCTION (INCLUDING UNDERGROUND UTILITIES AND STORMWATER SYSTEM) TO THE OWNER AT THE END OF CONSTRUCTION.

7. THE ARCHITECT OR ENGINEER IS NOT RESPONSIBLE FOR SITE SAFETY MEASURES TO BE EMPLOYED DURING CONSTRUCTION. THE ARCHITECT AND ENGINEER HAVE NO CONTRACTUAL DUTY TO CONTROL THE SAFEST METHODS OR MEANS OF THE WORK, JOB SITE RESPONSIBILITIES, SUPERVISION OR TO SUPERVISE SAFETY AND DOES NOT VOLUNTARILY ASSUME ANY SUCH DUTY OR RESPONSIBILITY.

8. THE CONTRACTOR SHALL COMPLY WITH CFR 29 PART 1926 FOR EXCAVATION, TRENCHING, AND TRENCH PROTECTION REQUIREMENTS.

9. INFORMATION ON EXISTING UTILITIES AND STORM DRAINAGE SYSTEMS HAS BEEN COMPILED FROM AVAILABLE INFORMATION INCLUDING UTILITY COMPANY AND MUNICIPAL OR COUNTY OR STATE RECORD MAPS AND/OR FIELD SURVEY AND IS NOT GUARANTEED CORRECT OR COMPLETE. UTILITIES AND STORM DRAINAGE SYSTEMS ARE SHOWN TO ALERT THE CONTRACTOR TO THEIR PRESENCE AND THE CONTRACTOR IS SOLELY RESPONSIBLE FOR DETERMINING ACTUAL LOCATIONS AND ELEVATIONS OF ALL UNDERGROUND AND OVERHEAD UTILITIES AND STORM DRAINAGE SYSTEMS INCLUDING SERVICES. PRIOR TO DEMOLITION OR CONSTRUCTION, THE CONTRACTOR SHALL CONTACT RI DIG SAFE 72 HOURS BEFORE COMMENCEMENT OF WORK AT (888) 344-7233 OR AT 811 AND VERIFY ALL UTILITY AND STORM DRAINAGE SYSTEM LOCATIONS. THE CONTRACTOR SHALL EMPLOY THE USE OF A UTILITY LOCATING COMPANY TO PROVIDE SUBSURFACE UTILITY ENGINEERING CONSISTING OF DESIGNATING UTILITIES AND STORM PIPING ON PRIVATE PROPERTY WITHIN THE CONTRACT LIMIT AND CONSISTING OF DESIGNATING AND LOCATING WHERE PROPOSED UTILITIES AND STORM PIPING CROSS EXISTING UTILITIES AND STORM PIPING WITHIN THE CONTRACT LIMITS.

10. DO NOT SCALE DRAWINGS. DIMENSIONS GOVERN OVER SCALED DIMENSIONS.

11. SHOULD CONFLICTING INFORMATION BE FOUND WITHIN THE CONTRACT DOCUMENTS, IT IS INCUMBENT UPON THE CONTRACTOR TO REQUEST CLARIFICATION PRIOR TO PROCEEDING WITH THE WORK. FOR BUDGETING PURPOSES, THE CONTRACTOR SHALL CARRY THE COST OF THE HIGHER QUALITY/QUANTITY OF WORK UNTIL SUCH TIME THAT A CLARIFICATION IS RENDERED.

12. ALL CONTRACTORS AND SUBCONTRACTORS SHALL OBTAIN COMPLETE DRAWING PLAN SETS FOR BIDDING AND CONSTRUCTION. PLAN SETS OR PLAN SET ELECTRONIC POSTINGS SHALL NOT BE DISASSEMBLED INTO PARTIAL PLAN SETS FOR USE BY CONTRACTORS AND SUBCONTRACTORS OF INDIVIDUAL TRADES. IT SHALL BE THE CONTRACTOR'S AND SUBCONTRACTOR'S RESPONSIBILITY TO OBTAIN COMPLETE PLAN SETS OR COMPLETE PLAN SET ELECTRONIC POSTINGS FOR USE IN BIDDING AND CONSTRUCTION.

13. ALL NOTES AND DIMENSION DESIGNATED AS "TYPICAL" OR "TYP" APPLY TO ALL LIKE OR SIMILAR CONDITIONS THROUGHOUT THE PROJECT.

14. CONTRACTOR(S) TO TAKE AND VERIFY ALL DIMENSIONS AND CONDITIONS OF THE WORK AND BE RESPONSIBLE FOR COORDINATION OF SAME. FIELD VERIFY ALL EXISTING CONDITIONS PRIOR TO START OF WORK.

15. BL COMPANIES WILL PREPARE FINAL CONSTRUCTION DOCUMENTS SUITABLE FOR BIDDING AND CONSTRUCTION. PROGRESS SETS OF THESE DOCUMENTS ARE NOT SUITABLE FOR THOSE PURPOSES. IF CLIENT ELECTS TO SOLICIT BIDS OR ENTER INTO CONSTRUCTION CONTRACTS UTILIZING CONSTRUCTION DOCUMENTS THAT ARE NOT YET FINAL, CONSULTANT SHALL NOT BE RESPONSIBLE FOR ANY COSTS OR DELAY ARISING AS A RESULT.

16. NO CONSTRUCTION OR DEMOLITION SHALL BEGIN UNTIL APPROVAL OF THE FINAL PLANS IS GRANTED BY ALL GOVERNING AND REGULATORY AGENCIES.

17. THE OWNER IS RESPONSIBLE FOR OBTAINING ALL NECESSARY ZONING PERMITS REQUIRED BY GOVERNMENT AGENCIES PRIOR TO CONSTRUCTION. THE CONTRACTOR SHALL CONTACT AND OBTAIN FROM MUNICIPAL SOURCES ALL CONSTRUCTION PERMITS, INCLUDING ANY STATE DOT PERMITS, SEWER AND WATER CONNECTION PERMITS, AND ROADWAY CONSTRUCTION PERMITS. THE CONTRACTOR SHALL POST ALL BONDS, PAY ALL FEES, PROVIDE PROOF OF INSURANCE AND PROVIDE TRAFFIC CONTROL NECESSARY FOR THIS WORK.

18. THE CONTRACTOR SHALL SUBMIT SHOP DRAWINGS OF ALL PRODUCTS AND MATERIALS PER PLANS AND SPECIFICATIONS TO THE OWNER AND CIVIL ENGINEER FOR REVIEW AND APPROVAL PRIOR TO FABRICATION OR DELIVERY TO THE SITE. ALLOW A MINIMUM OF 14 WORKING DAYS FOR REVIEW.

19. THE CONTRACTOR SHALL FOLLOW THE SEQUENCE OF CONSTRUCTION NOTES PROVIDED ON THE SEDIMENT AND EROSION CONTROL PLAN.

20. THE CONTRACTOR SHALL REFERENCE ARCHITECTURAL PLANS FOR EXACT DIMENSIONS AND CONSTRUCTION DETAILS OF BUILDING, AND THE RAISED CONCRETE SIDEWALKS, LANDINGS, RAMPS, AND STAIRS.

21. SHOULD ANY UNCHARTED OR INCORRECTLY CHARTED, EXISTING PIPING OR OTHER UTILITY BE UNCOVERED DURING EXCAVATION, CONSULT THE CIVIL ENGINEER IMMEDIATELY FOR DIRECTIONS BEFORE PROCEEDING FURTHER WITH WORK IN THIS AREA.

22. ALL SITE DIMENSIONS ARE REFERENCED TO THE FACE OF CURBS OR EDGE OF PAVING AS APPLICABLE UNLESS OTHERWISE NOTED. ALL BUILDING DIMENSIONS ARE REFERENCED TO THE OUTSIDE FACE OF THE STRUCTURE.

23. THE CONTRACTOR SHALL PROVIDE AND MAINTAIN TRAFFIC DEVICES FOR PROTECTION OF VEHICLES AND PEDESTRIANS CONSISTING OF DRUMS, BARRIERS, SIGNS, LIGHTS, FENCES, TEMPORARY WALKWAYS, TRAFFIC CONTROLLERS AND UNIFORMED TRAFFIC OFFICERS AS REQUIRED OR AS ORDERED BY THE ENGINEER OR AS REQUIRED BY THE LOCAL GOVERNING AUTHORITIES OR AS REQUIRED BY PERMIT STIPULATIONS OR AS REQUIRED BY THE OWNER. CONTRACTOR SHALL MAINTAIN ALL TRAFFIC LANES AND PEDESTRIAN WALKWAYS FOR USE AT ALL TIMES UNLESS WRITTEN APPROVAL FROM THE APPROPRIATE GOVERNING AGENCY IS GRANTED.

24. TRAFFIC CONTROL SIGNAGE SHALL CONFORM TO THE STATE DOT STANDARD DETAIL SHEETS AND THE MANUAL OF UNIFORM TRAFFIC CONTROL DEVICES. SIGNS SHALL BE INSTALLED PLUMB WITH THE EDGE OF THE SIGN 2' OFF THE FACE OF THE CURB, AND WITH 7' VERTICAL CLEARANCE UNLESS OTHERWISE DETAILED OR NOTED.

25. REFER TO DETAIL SHEETS FOR PAVEMENT, CURBING, AND SIDEWALK INFORMATION.

26. THE CONTRACT LIMIT IS THE PROPERTY LINE UNLESS OTHERWISE SPECIFIED OR SHOWN ON THE CONTRACT DRAWINGS.

27. THE CONTRACTOR SHALL SUBMIT A SHOP DRAWING OF THE PAVEMENT MARKING PAINT MIXTURE PRIOR TO STRIPING.

28. PAVEMENT MARKING KEY:

    4" SWL 4" SOLID WHITE LINE

29. PARKING SPACES SHALL BE STRIPED WITH 4" SWL; HATCHED AREA SHALL BE STRIPED WITH 4" SWL AT A 45° ANGLE, 2' ON CENTER. OTHER MARKINGS SHALL BE PAINTED WHITE OR AS NOTED.

30. THE CONTRACTOR SHALL RESTORE ANY UTILITY STRUCTURE, DRAINAGE STRUCTURE, PIPE, UTILITY, PAVEMENT, CURBS, SIDEWALKS, LANDSCAPED AREAS, SWALE, PAVEMENT MARKINGS, OR SIGNAGE DISTURBED DURING DEMOLITION AND/OR CONSTRUCTION TO THEIR ORIGINAL CONDITION OR BETTER, AS APPROVED BY THE CIVIL ENGINEER, AND TO THE SATISFACTION OF THE OWNER AND MUNICIPALITY.

31. EXISTING BOUNDARY AND TOPOGRAPHY IS BASED ON DRAWING TITLED "EXISTING CONDITIONS MAP"; SCALED 1"=20', DATED 10/04/2023, BY BL COMPANIES INC.

32. ALTERNATIVE METHODS AND PRODUCTS OTHER THAN THOSE SPECIFIED MAY BE USED IF REVIEWED AND APPROVED BY THE OWNER, CIVIL ENGINEER, AND APPROPRIATE REGULATORY AGENCY PRIOR TO INSTALLATION DURING THE BIDDING PROCESS.

33. AN EROSION CONTROL BOND IS REQUIRED TO BE POSTED BY THE CONTRACTOR BEFORE THE START OF ANY ACTIVITY ON OR OFF SITE. THE AMOUNT OF THE EROSION CONTROL BOND WILL BE DETERMINED BY THE AUTHORITY HAVING JURISDICTION.

34. THE SITE IS CURRENTLY SERVICED BY PUBLIC WATER.

35. NO PART OF THE PROJECT PARCEL IS LOCATED WITHIN ANY FEMA DESIGNATED FLOOD HAZARD AREAS.

36. THERE ARE NO WETLANDS LOCATED ON THE SITE AS INDICATED BY EXISTING CONDITIONS MAP AND NWI MAPPING.

37. THE BUS AND TRAIN STATION IS TO REMAIN OPEN FOR BUSINESS FOR THE DURATION OF THE CONSTRUCTION OF THE PROPOSED BUILDING.

38. FIRE LANES SHALL BE ESTABLISHED AND PROPERLY DESIGNATED IN ACCORDANCE WITH THE REQUIREMENTS OF THE FIRE DISTRICT FIRE MARSHAL.

39. THE CONTRACTOR SHALL REMOVE CONFLICTING PAVEMENT MARKINGS IN THE ROADWAY BY METHOD APPROVED BY THE AUTHORITY HAVING JURISDICTION OR DOT AS APPLICABLE FOR THE LOCATION OF THE WORK.

40. ALL ADA DESIGNATED PARKING STALLS, ACCESS AISLES AND PEDESTRIAN WALKWAYS SHALL CONFORM TO THE CURRENT VERSION OF THE AMERICANS WITH DISABILITIES ACT STANDARDS FOR ACCESSIBLE DESIGN AND ANSI STANDARDS AND AS MAY BE SUPERCEDED BY THE STATE BUILDING CODE.

41. CONSTRUCTION OCCURRING ON THIS SITE SHALL COMPLY WITH NFPA 241 STANDARD FOR SAFEGUARDING CONSTRUCTION, ALTERATION AND DEMOLITION OPERATIONS, AND CHAPTER 16 OF NFPA 1 UNIFORM FIRE CODE.

42. CONTRACTOR SHALL SECURE ANY PERMITS, PAY ALL FEES AND PERFORM CLEARING AND GRUBBING AND DEBRIS REMOVAL PRIOR TO COMMENCEMENT OF GRADING OPERATIONS.

43. SEDIMENT AND EROSION CONTROLS AS SHOWN ON THE SEDIMENT AND EROSION CONTROL PLAN AND/OR DEMOLITION PLAN SHALL BE INSTALLED BY THE DEMOLITION CONTRACTOR PRIOR TO START OF DEMOLITION AND CLEARING AND GRUBBING OPERATIONS.

44. REMOVE AND DISPOSE OF ANY SIDEWALKS, FENCES, STAIRS, WALLS, DEBRIS AND RUBBISH REQUIRING REMOVAL FROM THE WORK AREA IN AN APPROVED OFF SITE LANDFILL, BY AN APPROVED HAULER. HAULER SHALL COMPLY WITH ALL REGULATORY REQUIREMENTS.

45. THE CONTRACTOR SHALL SECURE ALL PERMITS FOR HIS DEMOLITION AND DISPOSAL OF HIS DEMOLITION MATERIAL TO BE REMOVED FROM THE SITE. THE CONTRACTOR SHALL POST BONDS AND PAY PERMIT FEES AS REQUIRED. BUILDING DEMOLITION CONTRACTOR SHALL BE RESPONSIBLE FOR PERMITS AND DISPOSAL OF ALL BUILDING DEMOLITION DEBRIS IN AN APPROVED OFF-SITE LANDFILL.

46. ASBESTOS OR HAZARDOUS MATERIAL, IF FOUND ON SITE, SHALL BE REMOVED BY A LICENSED HAZARDOUS MATERIAL ABATEMENT CONTRACTOR.

47. THE CONTRACTOR SHALL PREPARE ALL MANIFEST DOCUMENTS AS REQUIRED PRIOR TO COMMENCEMENT OF DEMOLITION.

48. THE CONTRACTOR SHALL CUT AND PLUG, OR ARRANGE FOR THE APPROPRIATE UTILITY PROVIDER TO CUT AND PLUG ALL SERVICE PIPING AT THE STREET LINE OR AT THE MAIN, AS REQUIRED BY THE UTILITY PROVIDER, OR AS OTHERWISE NOTED OR SHOWN ON THE CONTRACT DRAWINGS. ALL SERVICES MAY NOT BE SHOWN ON THIS PLAN. THE CONTRACTOR SHALL INVESTIGATE THE SITE PRIOR TO BIDDING TO DETERMINE THE EXTENT OF SERVICE PIPING TO BE REMOVED, CUT OR PLUGGED. THE CONTRACTOR SHALL PAY ALL UTILITY PROVIDER FEES FOR ABANDONMENTS AND REMOVALS.

49. THE CONTRACTOR SHALL PROTECT ALL IRON PINS, MONUMENTS AND PROPERTY CORNERS DURING DEMOLITION AND CONSTRUCTION ACTIVITIES. ANY CONTRACTOR DISTURBED PINS, MONUMENTS, AND OR PROPERTY CORNERS, ETC. SHALL BE RESET BY A LICENSED LAND SURVEYOR AT THE EXPENSE OF THE CONTRACTOR.

50. THE DEMOLITION CONTRACTOR SHALL STABILIZE THE SITE AND KEEP EROSION CONTROL MEASURES IN PLACE UNTIL THE COMPLETION OF HIS WORK OR UNTIL THE COMMENCEMENT OF WORK BY THE SITE CONTRACTOR, WHICHEVER OCCURS FIRST, AS REQUIRED OR DEEMED NECESSARY BY THE ENGINEER OR OWNER'S REPRESENTATIVE. THE SITE CONTRACTOR SHALL ASSUME RESPONSIBILITY FOR THE MAINTENANCE OF EXISTING EROSION AND SEDIMENTATION CONTROLS AND FOR INSTALLATION OF ANY NEW SEDIMENT AND EROSION CONTROLS AS PER THE SEDIMENT AND EROSION CONTROL PLAN, AT THAT TIME.

51. THE CONTRACTOR SHALL PUMP OUT BUILDING FUEL AND WASTE OIL TANKS (IF ANY ARE ENCOUNTERED) AND REMOVE FUEL TO AN APPROVED DISPOSAL AREA BY A LICENSED WASTE OIL HANDLING CONTRACTOR IN STRICT ACCORDANCE WITH STATE REQUIREMENTS.

52. IF IMPACTED OR CONTAMINATED SOIL IS ENCOUNTERED BY THE CONTRACTOR, THE CONTRACTOR SHALL SUSPEND EXCAVATION WORK OF IMPACTED SOIL AND NOTIFY THE OWNER AND/OR OWNER'S ENVIRONMENTAL CONSULTANT PRIOR TO PROCEEDING WITH FURTHER WORK IN THE IMPACTED SOIL LOCATION UNTIL FURTHER INSTRUCTED BY THE OWNER AND/OR OWNER'S ENVIRONMENTAL CONSULTANT.

53. EXISTING WATER SERVICES SHALL BE DISCONNECTED AND CAPPED AT MAIN IN ACCORDANCE WITH THE REQUIREMENTS OF THE WATER UTILITY PROVIDER. REMOVE EXISTING ONSITE WATER PIPING TO BE ABANDONED TO RIGHT OF WAY LINE UNLESS OTHERWISE SHOWN ON DEMOLITION PLANS OR AS REQUIRED BY THE WATER UTILITY PROVIDER TO BE REMOVED TO MAIN.

54. EXISTING SANITARY LATERAL SHALL BE PLUGGED WITH NON-SHRINK GROUT AT CURB LINE OR AT MAIN CONNECTION IN ACCORDANCE WITH THE SANITARY UTILITY PROVIDER REQUIREMENTS. REMOVE EXISTING LATERAL PIPING FROM SITE UNLESS OTHERWISE SHOWN ON DEMOLITION PLANS OR AS REQUIRED BY THE SANITARY UTILITY PROVIDER.

55. DOMESTIC GAS SERVICES SHALL BE CAPPED AND SERVICE LINES PURGED OF RESIDUAL GAS IN ACCORDANCE WITH THE GAS UTILITY PROVIDER REQUIREMENTS. WORK TO BE COORDINATED BY AND PAID FOR BY THE CONTRACTOR. REMOVE EXISTING SERVICE PIPING ON SITE. ANY PROPANE TANKS SHALL BE PURGED OF RESIDUAL GAS BY PROPANE SUPPLIER. CONTRACTOR SHALL COORDINATE THIS WORK AND PAY NECESSARY FEES.

56. THE CONTRACTOR SHALL PROVIDE DISCONNECT NOTIFICATION TO THE MUNICIPALITY ENGINEERING DEPARTMENT, TELECOMMUNICATIONS UTILITY PROVIDER, GAS UTILITY PROVIDER, ELECTRIC UTILITY PROVIDER, SANITARY UTILITY PROVIDER, AND WATER UTILITY PROVIDER AT LEAST THREE WEEKS PRIOR TO BEGINNING DEMOLITION.

57. THE CONTRACTOR IS RESPONSIBLE FOR SECURING A DEMOLITION PERMIT FROM THE CITY OF PAWTUCKET BUILDING DEPARTMENT AND MUST FURNISH THE REQUIRED APPLICATION MATERIAL AND PAY ALL FEES.

58. BACK FILL DEPRESSIONS, FOUNDATION HOLES AND REMOVED DRIVEWAY AREAS IN LOCATIONS NOT SUBJECT TO FURTHER EXCAVATION WITH SOIL MATERIAL APPROVED BY THE OWNER'S GEOTECHNICAL ENGINEER AND COMPACT, FERTILIZE, SEED AND MULCH DISTURBED AREAS NOT SUBJECT TO FURTHER SITE CONSTRUCTION. DEMOLISHED BUILDING FOUNDATION AREA AND BASEMENT IF PRESENT TO BE BACKFILLED WITH GRAVEL FILL OR MATERIAL SPECIFIED IN THE PROJECT GEOTECHNICAL REPORT IN LIFT THICKNESS SPECIFIED IN THE GEOTECHNICAL REPORT. COMPACT TO 95% MAX. DRY DENSITY PER ASTM D1557 AT MOISTURE CONTENT SPECIFIED IN GEOTECHNICAL REPORT AND EARTHWORK SPECIFICATION. EMPLOY WATERING EQUIPMENT FOR DUST CONTROL.

59. THE CONTRACTOR SHALL REPAIR PAVEMENTS BY INSTALLING TEMPORARY AND PERMANENT PAVEMENTS IN PUBLIC RIGHTS OF WAYS AS REQUIRED BY LOCAL GOVERNING AUTHORITIES AND THE MUNICIPALITY AND PER PERMIT REQUIREMENTS DUE TO DEMOLITION AND PIPE REMOVAL ACTIVITIES.

60. THE CONTRACTOR SHALL CUT AND REMOVE AT LUMINARE AND SIGN LOCATIONS ANY PROTRUDING CONDUITS TO 24" BELOW GRADE. THE CONTRACTOR SHALL REMOVE ALL CABLE AND CONDUCTORS FROM REMAINING LIGHTING AND SIGNING CONDUITS TO BE ABANDONED. ANY REMAINING LIGHTING TO REMAIN IN PLACE SHALL BE RECIRCUITED OR REWIRED AS NECESSARY TO REMAIN IN OPERATION.

61. NO WORK ON THIS SITE SHALL BE INITIATED BY THE CONTRACTOR UNTIL A PRE-CONSTRUCTION MEETING WITH OWNER AND THE CIVIL ENGINEER IS PERFORMED. THE CONTRACTOR SHOULD BE AWARE OF ANY SITE INFORMATION AVAILABLE SUCH AS GEOTECHNICAL AND ENVIRONMENTAL REPORTS. THE CONTRACTOR SHALL HAVE DIG SAFE MARK OUTS OF EXISTING UTILITIES COMPLETED PRIOR TO MEETING.

62. THE CONTRACTOR SHALL ARRANGE FOR AND INSTALL TEMPORARY OR PERMANENT UTILITY CONNECTIONS WHERE INDICATED ON PLAN OR AS REQUIRED. MAINTAIN UTILITY SERVICES TO BUILDINGS OR TO SERVICES TO REMAIN. CONTRACTOR TO COORDINATE WITH UTILITY PROVIDERS FOR INSTALLATION AND PAY UTILITY PROVIDER FEES.

63. THE CONTRACTOR SHALL NOT COMMENCE DEMOLITION OR UTILITY DISCONNECTIONS UNTIL AUTHORIZED TO DO SO BY THE OWNER.

64. THE CONTRACTOR OR DEMOLITION CONTRACTOR SHALL INSTALL TEMPORARY SHEETING OR SHORING AS NECESSARY TO PROTECT EXISTING AND NEW BUILDINGS, STRUCTURES AND UTILITIES DURING CONSTRUCTION AND DEMOLITION. SHEETING OR SHORING SHALL BE DESIGNED BY A PROFESSIONAL ENGINEER, LICENSED IN THIS STATE AND EVIDENCE OF SUCH SUBMITTED TO THE OWNER PRIOR TO INSTALLATION.

65. NO SALVAGE SHALL BE PERMITTED UNLESS PAID TO THE OWNER AS A CREDIT.

66. ANY EXISTING POTABLE WELL AND ANY EXISTING SEPTIC TANKS/ABSORPTION AREAS SHALL BE ABANDONED AND REMOVED PER THE CITY OF PAWTUCKET AND HEALTH CODE REQUIREMENTS.

67. THE EXISTING BUILDING AND PARKING AREA AND DRIVEWAYS SHALL REMAIN OPEN FOR NORMAL BUSINESS OPERATIONS UNTIL COMPLETION AND OCCUPATION OF THE NEW BUILDING.

68. THE CONTRACTOR SHALL PRESERVE EXISTING VEGETATION WHERE POSSIBLE AND/OR AS NOTED ON DRAWINGS. REFER TO SEDIMENT AND EROSION CONTROL PLAN FOR LIMIT OF DISTURBANCE AND EROSION CONTROL NOTES.

69. TOPSOIL SHALL BE STRIPPED AND STOCKPILED ON SITE FOR USE IN FINAL LANDSCAPING.

70. THE CONTRACTOR SHALL COMPACT FILL IN LIFT THICKNESS PER THE GEOTECHNICAL REPORT UNDER ALL PARKING, BUILDING, DRIVE, AND STRUCTURE AREAS TO 95% OF THE MAXIMUM DRY DENSITY AS DETERMINED BY ASTM D1557 (MODIFIED PROCTOR TEST), OR AS REQUIRED BY THE GEOTECHNICAL ENGINEER.

71. UNDERDRAINS SHALL BE ADDED, IF DETERMINED NECESSARY IN THE FIELD BY THE OWNER/GEOTECHNICAL ENGINEER, AFTER SUBGRADE IS ROUGH GRADED.

72. VERTICAL DATUM IS NAVD 88.

73. CLEARING LIMITS SHALL BE PHYSICALLY MARKED IN THE FIELD AND APPROVED BY THE MUNICIPALITY AGENT PRIOR TO THE START OF WORK ON THE SITE.

74. PROPER CONSTRUCTION PROCEDURES SHALL BE FOLLOWED ON ALL IMPROVEMENTS WITHIN THIS PARCEL SO AS TO PREVENT THE SILTING OF ANY WATERCOURSE OR WETLANDS IN ACCORDANCE WITH THE REGULATIONS OF RIDEM AND THE RHODE ISLAND SOIL EROSION AND SEDIMENT CONTROL HANDBOOK, LATEST EDITION. IN ADDITION, THE CONTRACTOR SHALL STRICTLY ADHERE TO THE SEDIMENT AND EROSION CONTROL PLAN CONTAINED HEREIN. THE CONTRACTOR SHALL BE RESPONSIBLE TO POST ALL BONDS AS REQUIRED BY THE LOCAL MUNICIPALITIES, WHICH WOULD GUARANTEE THE PROPER IMPLEMENTATION OF THE PLAN.

75. ALL SITE WORK, MATERIALS OF CONSTRUCTION, AND CONSTRUCTION METHODS FOR EARTHWORK AND STORM DRAINAGE WORK SHALL CONFORM TO THE SPECIFICATIONS AND DETAILS AND APPLICABLE SECTIONS OF THE PROJECT SPECIFICATIONS MANUAL. OTHERWISE THIS WORK SHALL CONFORM TO THE RHODE ISLAND DEPARTMENT OF TRANSPORTATION SPECIFICATIONS AND PROJECT GEOTECHNICAL REPORT IF THERE IS NO PROJECT SPECIFICATIONS MANUAL. ALL FILL MATERIAL UNDER STRUCTURES AND PAVED AREAS SHALL BE PER THE ABOVE STATED APPLICABLE SPECIFICATIONS, AND/OR PROJECT GEOTECHNICAL REPORT, AND SHALL BE PLACED IN ACCORDANCE WITH THE APPLICABLE SPECIFICATIONS UNDER THE SUPERVISION OF A QUALIFIED PROFESSIONAL ENGINEER. MATERIAL SHALL BE COMPACTED IN LIFT THICKNESSES PER THE PROJECT GEOTECHNICAL REPORT TO 95% OF THE MAXIMUM DRY DENSITY AS DETERMINED BY ASTM D 1557 AT MOISTURE CONTENT INDICATED IN PROJECT GEOTECHNICAL REPORT.

76. ALL DISTURBANCE INCURRED TO MUNICIPAL, COUNTY, AND STATE PROPERTY DUE TO CONSTRUCTION SHALL BE RESTORED TO ITS PREVIOUS CONDITION OR BETTER, TO THE SATISFACTION OF THE MUNICIPALITY, COUNTY AND STATE AS APPLICABLE FOR THE LOCATION OF THE WORK.

77. ALL CONSTRUCTION WITHIN A DOT RIGHT OF WAY SHALL COMPLY WITH ALL DEPARTMENT OF TRANSPORTATION STANDARDS AND SPECIFICATIONS.

78. THE UTILITY PLAN DETAILS SITE INSTALLED PIPES UP TO 5' FROM THE BUILDING FACE. REFER TO DRAWINGS BY BL COMPANIES FOR BUILDING CONNECTIONS. SITE CONTRACTOR SHALL SUPPLY AND INSTALL PIPE ADAPTERS AS NECESSARY AT BUILDING CONNECTION POINT OR AT EXISTING UTILITY OR PIPE CONNECTION POINT.

79. THE CONTRACTOR SHALL VISIT THE SITE AND VERIFY THE ELEVATION AND LOCATION OF ALL UTILITIES BY VARIOUS MEANS PRIOR TO BEGINNING ANY EXCAVATION. TEST PITS SHALL BE DUG AT ALL LOCATIONS WHERE PROPOSED SANITARY SEWERS AND WHERE PROPOSED STORM PIPING WILL CROSS EXISTING UTILITIES, AND THE HORIZONTAL AND VERTICAL LOCATIONS OF THE UTILITIES SHALL BE DETERMINED. THE CONTRACTOR SHALL CONTACT THE CIVIL ENGINEER IN THE EVENT OF ANY DISCOVERED OR UNFORESEEN CONFLICTS BETWEEN EXISTING AND PROPOSED SANITARY SEWERS, STORM PIPING AND UTILITIES SO THAT AN APPROPRIATE MODIFICATION MAY BE MADE.

80. UTILITY CONNECTION DESIGN AS REFLECTED ON THE PLAN MAY CHANGE SUBJECT TO UTILITY PROVIDER AND GOVERNING AUTHORITY STAFF REVIEW.

81. THE CONTRACTOR SHALL ENSURE THAT ALL UTILITY PROVIDERS AND GOVERNING AUTHORITY STANDARDS FOR MATERIALS AND CONSTRUCTION METHODS ARE MET. THE CONTRACTOR SHALL PERFORM PROPER COORDINATION WITH THE RESPECTIVE UTILITY PROVIDER.

82. THE CONTRACTOR SHALL ARRANGE FOR AND COORDINATE WITH THE RESPECTIVE UTILITY PROVIDERS FOR SERVICE INSTALLATIONS AND CONNECTIONS. THE CONTRACTOR SHALL COORDINATE WORK TO BE PERFORMED BY THE VARIOUS UTILITY PROVIDERS AND SHALL PAY ALL FEES FOR CONNECTIONS, DISCONNECTIONS, RELOCATIONS, INSPECTIONS, AND DEMOLITION UNLESS OTHERWISE STATED IN THE PROJECT SPECIFICATIONS MANUAL AND/OR GENERAL CONDITIONS OF THE CONTRACT.

83. ALL EXISTING PAVEMENT WHERE UTILITY PIPING IS TO BE INSTALLED SHALL BE SAW CUT. AFTER UTILITY INSTALLATION IS COMPLETED, THE CONTRACTOR SHALL INSTALL TEMPORARY AND/OR PERMANENT PAVEMENT REPAIR AS DETAILED ON THE DRAWINGS OR AS REQUIRED BY THE OWNER HAVING JURISDICTION.

84. ALL PIPES SHALL BE LAID ON STRAIGHT ALIGNMENTS AND EVEN GRADES USING A PIPE LASER OR OTHER ACCURATE METHOD.

85. SANITARY LATERAL SHALL MAINTAIN (10' MIN. HORIZONTAL 1.5' VERTICAL MIN.) SEPARATION DISTANCE FROM WATER LINES, OR ADDITIONAL PROTECTION MEASURES WILL BE REQUIRED WHERE PERMITTED, WHICH SHALL INCLUDE CONCRETE ENCASEMENT OF PIPING UNLESS OTHERWISE DIRECTED BY THE UTILITY PROVIDERS AND CIVIL ENGINEER.

86. RELOCATION OF UTILITY PROVIDER FACILITIES SHALL BE DONE IN ACCORDANCE WITH THE REQUIREMENTS OF THE UTILITY PROVIDER.

87. THE CONTRACTOR SHALL COMPACT THE PIPE BACKFILL IN 8" LIFTS ACCORDING TO THE PIPE BEDDING DETAILS. TRENCH BOTTOM SHALL BE STABLE IN HIGH GROUNDWATER AREAS. A PIPE FOUNDATION SHALL BE USED PER THE TRENCH DETAILS AND IN AREAS OF ROCK EXCAVATION.

88. CONTRACTOR TO PROVIDE STEEL SLEEVES AND ANNULAR SPACE SAND FILL FOR UTILITY PIPE AND CONDUIT CONNECTIONS UNDER FOOTINGS.

89. BUILDING UTILITY PENETRATIONS AND LOCATIONS ARE SHOWN FOR THE CONTRACTOR'S INFORMATION AND SHALL BE VERIFIED WITH THE BUILDING MEP, STRUCTURAL, AND ARCHITECTURAL DRAWINGS AND WITH THE OWNER'S CONSTRUCTION MANAGER.

90. ALL UTILITY CONSTRUCTION IS SUBJECT TO INSPECTION FOR APPROVAL PRIOR TO BACKFILLING, IN ACCORDANCE WITH THE APPROPRIATE UTILITY PROVIDER REQUIREMENTS.

91. A ONE-FOOT MINIMUM VERTICAL CLEARANCE BETWEEN WATER, GAS, ELECTRICAL, AND TELEPHONE LINES AND STORM PIPING SHALL BE PROVIDED. A SIX-INCH MINIMUM CLEARANCE SHALL BE MAINTAINED BETWEEN STORM PIPING AND SANITARY SEWER WITH A CONCRETE ENCASEMENT. AN 18-INCH TO 6-INCH VERTICAL CLEARANCE BETWEEN SANITARY SEWER PIPING AND STORM PIPING SHALL REQUIRE CONCRETE ENCASEMENT OF THE PROPOSED PIPING.

92. GRAVITY SANITARY SEWER PIPING AND PRESSURIZED WATERLINES SHALL BE LOCATED IN SEPARATE TRENCHES AT LEAST 10 FEET APART WHENEVER POSSIBLE. WHEN INSTALLED IN THE SAME TRENCH, THE WATER PIPE SHALL BE LAID ON A TRENCH BENCH AT LEAST 18 INCHES ABOVE THE TOP OF THE SANITARY SEWER PIPE AND AT LEAST 12 INCHES (PREFERABLY 18 INCHES) FROM THE SIDE OF THE SANITARY SEWER PIPE TRENCH.

93. SITE CONTRACTOR SHALL PROVIDE ALL BENDS, FITTINGS, ADAPTERS, ETC., AS REQUIRED FOR PIPE CONNECTIONS TO BUILDING STUB OUTS, INCLUDING ROOF/FOOTING DRAIN CONNECTIONS TO ROOF LEADERS AND TO STORM DRAINAGE SYSTEM.

94. MANHOLE RIMS AND CATCH BASIN GRATES SHALL BE SET TO ELEVATIONS SHOWN. SET ALL EXISTING MANHOLE RIMS AND VALVE COVERS TO BE RAISED OR LOWERED FLUSH WITH FINAL GRADE AS NECESSARY.

95. SITE CONTRACTOR SHALL COORDINATE INSTALLATION OF CONDUIT AND CABLES FOR SITE LIGHTING WITH THE BUILDING ELECTRICAL CONTRACTOR.

96. CONTRACTOR SHALL COORDINATE INSTALLATION FOR ELECTRICAL SERVICES TO PYLON SIGNS AND SITE LIGHTING WITH THE BUILDING ELECTRICAL CONTRACTOR.

97. THE CONTRACTOR SHALL ARRANGE AND COORDINATE WITH UTILITY PROVIDERS FOR WORK TO BE PERFORMED BY UTILITY PROVIDERS. THE CONTRACTOR SHALL PAY ALL UTILITY FEES UNLESS OTHERWISE STATED IN THE PROJECT SPECIFICATION MANUAL AND GENERAL CONDITIONS, AND REPAIR PAVEMENTS AS NECESSARY.

98. ELECTRIC, AND TELECOMMUNICATIONS SERVICES SHALL BE INSTALLED UNDERGROUND FROM SERVICE POLE. THE CONTRACTOR SHALL PROVIDE AND INSTALL AND BACKFILL PVC CONDUITS FOR TELECOMMUNICATIONS SERVICE, PVC CONDUITS FOR ELECTRIC SERVICE PRIMARY, PVC CONDUITS FOR ELECTRICAL SECONDARY PER BUILDING ELECTRICAL PLANS, (SCHEDULE 80 UNDER PAVEMENT, SCHEDULE 40 IN NON PAVEMENT AREAS). SERVICES MAY BE INSTALLED IN A COMMON TRENCH WITH 12" CLEAR SPACE BETWEEN. MINIMUM COVER IS 36" ON ELECTRIC CONDUITS, AND 24" ON TELECOMMUNICATIONS CONDUITS. SERVICES SHALL BE MARKED WITH MAGNETIC LOCATOR TAPE AND SHALL BE BEDDED, INSTALLED, AND BACKFILLED IN ACCORDANCE WITH ELECTRIC UTILITY PROVIDER, AND TELECOMMUNICATIONS COMPANY STANDARDS. GALVANIZED STEEL ELECTRICAL CONDUIT SHALL BE USED AT POLE AND TRANSFORMER LOCATIONS. INSTALL HANDHOLES AS REQUIRED TO FACILITATE INSTALLATION AND AS REQUIRED BY UTILITY PROVIDER. INSTALL TRAFFIC LOAD QUALIFIED HANDHOLES IN VEHICULAR AREAS. INSTALL CONCRETE ENCASEMENT ON PRIMARY ELECTRIC CONDUITS IF REQUIRED BY ELECTRIC UTILITY PROVIDER.

99. ALL WATER LINES TO HAVE A MINIMUM COVER OF 4'-6". ALL LINES SHALL BE BEDDED IN 6" SAND AND INITIALLY BACKFILLED WITH 12" SAND.

100. ALL WATER MAINS, WATER SERVICES AND SANITARY SEWER LATERALS SHALL CONFORM TO THE APPLICABLE WATER UTILITY PROVIDER SPECIFICATIONS, AND TO THE APPLICABLE SANITARY SEWER PROVIDER SPECIFICATIONS, AS WELL AS TO OTHER APPLICABLE INDUSTRY CODES (AWWA) AND PROJECT SPECIFICATIONS FOR POTABLE WATER SYSTEMS, AND FOR SANITARY SEWER SYSTEMS.

101. THE CONTRACTOR SHALL MAINTAIN ALL FLOWS AND UTILITY CONNECTIONS TO EXISTING BUILDINGS WITHOUT INTERRUPTION UNLESS/UNTIL AUTHORIZED TO DISCONNECT BY THE OWNERS, THE CIVIL ENGINEER, UTILITY PROVIDERS AND GOVERNING AUTHORITIES.

102. THE CONTRACTOR MAY SUBSTITUTE MASONRY STRUCTURES FOR PRECAST STRUCTURES IF APPROVED BY THE CIVIL ENGINEER AND ALLOWED BY THE GOVERNING AUTHORITY ENGINEER OR OTHER GOVERNING AUTHORITY.

103. PIPING SHALL BE LAID FROM DOWNGRADIENT END OF PIPE RUN IN AN UPGRADIENT DIRECTION WITH BELL END FACING UPGRADE IN THE DIRECTION OF PIPE LAYING.

104. CAST IRON SOIL PIPE (CISP) AND FITTINGS SHALL BE EXTRA HEAVY BELL & SPIGOT WITH NEOPRENE GASKET JOINTS IN ACCORDANCE WITH ASTM A74 & C564-(LATEST REVISION).

105. ALL RCP SHALL CONFORM TO THE REQUIREMENTS OF ASTM C-76; ALL RCP SHALL BE CLASS IV UNLESS OTHERWISE SHOWN. JOINTS SHALL CONFORM TO THE REQUIREMENTS OF ASTM C-443.

106. MANHOLE SECTIONS AND CONSTRUCTION SHALL CONFORM TO ASTM C-478.

107. HIGH DENSITY POLYETHYLENE (HDPE) STORM SEWER 12" OR GREATER IN DIAMETER SHALL BE HI-Q SURE-LOK 10.8 PIPE AS MANUFACTURED BY HANCOR INC. OR APPROVED EQUAL. HDPE PIPE SHALL HAVE SMOOTH INTERIOR AND CORRUGATED EXTERIOR AND SHALL MEET THE REQUIREMENTS OF AASHTO M294, TYPE S. PIPE SECTIONS SHALL BE JOINED WITH BELL-AND-SPIGOT JOINT MEETING THE REQUIREMENTS OF AASHTO M294. THE BELL SHALL BE AN INTEGRAL PART OF THE PIPE AND PROVIDE A MINIMUM PULL-APART STRENGTH OF 400 POUNDS. THE JOINT SHALL BE WATERTIGHT ACCORDING TO THE REQUIREMENTS OF ASTM D3212. GASKETS SHALL BE MADE OF POLYISOPRENE MEETING THE REQUIREMENTS OF ASTM F477. ALTERNATIVE HDPE PIPE MAY BE USED IF APPROVED BY THE ENGINEER AND OWNER'S CONSTRUCTION MANAGER PRIOR TO ORDERING.

108. HIGH DENSITY POLYETHYLENE (HDPE) STORM SEWER LESS THAN 12" IN DIAMETER SHALL BE HI-Q PIPE AS MANUFACTURED BY HANCOR INC. OR APPROVED EQUAL. HDPE PIPE SHALL HAVE SMOOTH INTERIOR AND CORRUGATED EXTERIOR AND SHALL MEET THE REQUIREMENTS OF AASHTO 252, TYPE S. PIPE SECTIONS SHALL BE JOINED WITH COUPLING BANDS OR EXTERNAL SNAP COUPLERS COVERING AT LEAST 2 FULL CORRUGATIONS ON EACH END OF THE PIPE. SILT-TIGHT (GASKET) CONNECTIONS SHALL INCORPORATE A CLOSED SYNTHETIC EXPANDED RUBBER GASKET. MEETING THE REQUIREMENTS OF AASHTO D1056 GRADE 2A2. GASKETS SHALL BE INSTALLED ON THE CONNECTION BY THE PIPE MANUFACTURER. ALTERNATIVE HDPE PIPE MAY BE USED IF APPROVED BY THE ENGINEER AND OWNER'S CONSTRUCTION MANAGER PRIOR TO ORDERING.

109. COPPER PIPE SHALL BE TYPE K TUBING WITH COMPRESSION FITTINGS.

110. GAS PIPE MATERIAL SHALL BE PER GAS COMPANY REQUIREMENTS.

CONTAMINATED SOILS NOTES

1. CONTAMINATED SOILS HAVE BEEN IDENTIFIED ON-SITE FROM THE PREVIOUS COMMUTER RAIL STATION/ BUS HUB PROJECT AND IS ANTICIPATED TO BE DISTURBED DURING CONSTRUCTION. A REMEDIAL ACTION WORK PLAN (RAWP) WILL BE PREPARED AND WILL OUTLINE THE DISTURBANCE, HANDLING, AND RESTORATION PROCEDURES FOR THE CONTRACTOR.

2. EXCAVATED SOILS MUST BE STOCKPILED ON-SITE, PLACED ON AND COVERED WITH POLY SHEETING, AND TESTED AND DISPOSED OF WITHIN 60 DAYS. AFTER SOIL REMOVAL, ALL EXPOSED SOILS ARE REQUIRED TO BE RE-CAPPED WITH APPROVED ENGINEERING CONTROLS. THESE CONTROLS INCLUDE: 2 FEET OF CLEAN FILL OR EQUIVALENT: BUILDING FOUNDATIONS, 4 INCHES OF PAVEMENT/CONCRETE UNDERLAIN BY 6 INCHES OF CLEAN FILL AND/OR 1 FOOT OF CLEAN FILL UNDERLAIN WITH A GEOTEXTILE LINER. CLEAN FILL IS REQUIRED TO BE TESTED PRIOR TO IMPORT AND USE ON-SITE.

DEFINITIONS

MUNICIPALITY SHALL MEAN CITY OF PAWTUCKET

COUNTY SHALL MEAN PROVIDENCE COUNTY

STATE SHALL MEAN RHODE ISLAND

WATER UTILITY PROVIDER SHALL MEAN PAWTUCKET WATER SUPPLY BOARD

SANITARY UTILITY PROVIDER SHALL MEAN NARRAGANSETT BAY COMMISSION

GAS UTILITY PROVIDER SHALL MEAN NATIONAL GRID

TELECOMMUNICATIONS UTILITY PROVIDER SHALL MEAN VERIZON OR OTHER

ELECTRIC UTILITY PROVIDER SHALL MEAN RHODE ISLAND ENERGY

Architecture
Engineering
Environmental
Land Surveying

BL Companies

100 Constitution Plaza
10th Floor
Hartford, CT 06103
(860) 249-2200

SUZANNE M. KING
No. 10040
REGISTERED
PROFESSIONAL ENGINEER
CIVIL

PROPOSED PASSENGER FACILITIES BUILDING
300 PINE STREET, PAWTUCKET
PROVIDENCE COUNTY, RHODE ISLAND

REVISIONS
No. Date Desc.

Designed	R.M.D.
Drawn	R.M.D.
Reviewed	T.A.H.
Scale	N.T.S.
Project No.	2301115
Date	04/09/2024
CAD File:	GN230111501

Title
GENERAL NOTES

Sheet No.
GN-1

4/10/2024, RDONAHUE, G:\JOBS23\10\2301115\DWG\GN230111501.DWG,GN-1 24X36.

© 2024 BL COMPANIES, INC. THESE DRAWINGS SHALL NOT BE UTILIZED BY ANY PERSON, FIRM OR CORPORATION WITHOUT THE SPECIFIC WRITTEN PERMISSION OF BL COMPANIES.

DEMOLITION LEGEND

- PROPERTY LINE
- LOD — LIMIT OF DISTURBANCE
- SAWCUT BIT. CONCRETE, BIT. PAVEMENT
- P — P — PROTECT AND PRESERVE SUBSURFACE UTILITY LINE AND FENCE
- XXXXXXXXXXXXXXXXXX — REMOVE AND DISPOSE OF FENCE, GATE, CURB, ELECTRIC UTILITY, UNKNOWN UTILITY
- CLEAR AND GRUB EXISTING VEGETATION
- REMOVE AND REPLACE CONCRETE SIDEWALK STRUCTURE
- REMOVE AND REPLACE CONCRETE SIDEWALK STRUCTURE
- (P) — PRESERVE AND PROTECT TREE, HANDHOLE, MONITORING WELL, LIGHT FIXTURE
- X — REMOVE AND DISPOSE OF EXISTING TREES
- x — REMOVE AND DISPOSE OF EXISTING LIGHT FIXTURE, MANHOLE, AND HANDHOLE

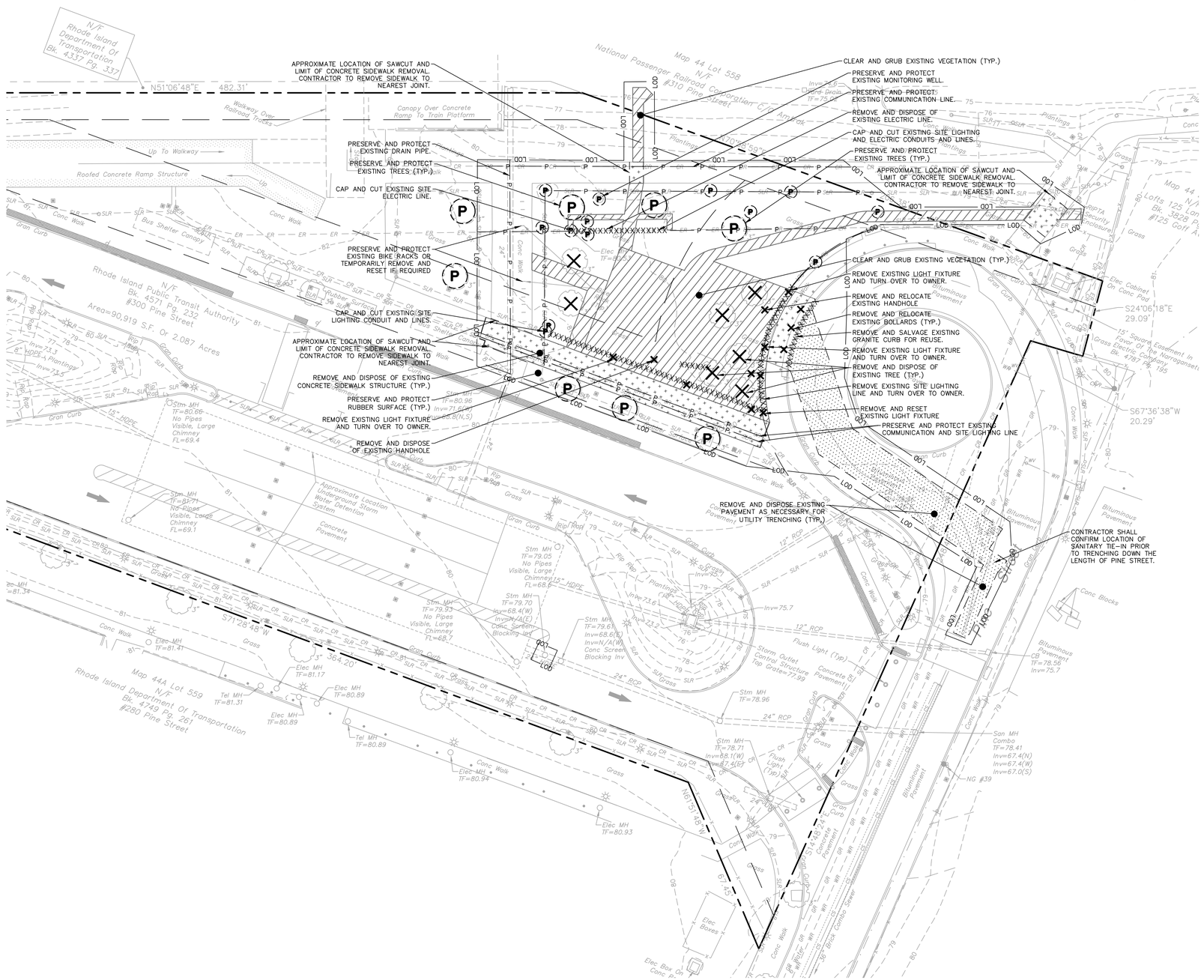

Architecture
Engineering
Environmental
Land Surveying

BL Companies

100 Constitution Plaza
10th Floor
Hartford, CT 06103
(860) 249-2200

SUZANNE M. KING
No. 10040
REGISTERED PROFESSIONAL ENGINEER
CIVIL

PROPOSED PASSENGER FACILITIES BUILDING

300 PINE STREET, PAWTUCKET
PROVIDENCE COUNTY, RHODE ISLAND

REVISIONS

No.	Date	Desc.

Designed	R.M.D.
Drawn	R.M.D.
Reviewed	T.A.H.
Scale	1"=20'
Project No.	2301115
Date	04/09/2024
CAD File: DM230111501	

Title

DEMOLITION PLAN

Sheet No.

DM-1

Xref (s) : B0202011501 ; XC230111501 ; XC230111504 ; XC230111501

4/12/2024, BDONAHUE, G:\CABS\35\01\2301115\DWG\DM230111501.DWG\DM-1 24X36 ARC

© 2024 BL COMPANIES, INC. THESE DRAWINGS SHALL NOT BE UTILIZED BY ANY PERSON, FIRM OR CORPORATION WITHOUT THE SPECIFIC WRITTEN PERMISSION OF BL COMPANIES.

SITE PLAN LEGEND

- PROPERTY LINE
- LOD — LIMIT OF DISTURBANCE
- BUILDING SETBACK
- SAWCUT LINE
- PROVIDE AND INSTALL GRANITE CURB
- PROVIDE AND INSTALL CONCRETE PAVEMENT STRUCTURE, REINFORCED CONCRETE SIDEWALK, OR MONOLITHIC CONCRETE CURB AND SIDEWALK
- PROVIDE AND INSTALL PERMANENT PAVEMENT AT UTILITY TRENCHING
- PROPOSED BUILDING
- HH — PROPOSED HANDHOLES
- PROPOSED LIGHT POLES AND LIGHTING FIXTURES

ZONING INFORMATION

LOCATION: PAWTUCKET, PROVIDENCE COUNTY

ZONE: CONANT THREAD DISTRICT (CT)

USE: PASSENGER TRANSPORTATION TERMINAL (PERMITTED)

ITEM #	ITEM	REQUIREMENTS	PROPOSED	VARIANCE
1	MINIMUM LOT AREA	5,000 S.F.	±90,918 S.F. (±2.09 AC.)	NO
2	MINIMUM LOT WIDTH	NONE REQUIRED	±279 FEET	NO
3	LOT FRONTAGE REQUIREMENTS	10 FEET MIN., 40 FEET MAX.	13 FEET	NO
4	MINIMUM FRONT SETBACK	NONE	79 FEET	NO
5	MINIMUM SIDE SETBACK	10 FEET	49 FEET	NO
6	MINIMUM REAR SETBACK	15 FEET	268 FEET	NO
7	MAXIMUM BUILDING HEIGHT	100 FEET	> 100 FEET	NO
8	MAXIMUM BUILDING COVERAGE	NONE	±5.7 PERCENT	NO

PARKING INFORMATION

ITEM #	ITEM	REQUIREMENTS	PROPOSED	VARIANCE
1	BUILDING SIZE	NONE REQUIRED	2,600 S.F.	NO
2	PARKING REQUIRED	NO MINIMUM REQUIREMENTS FOR PARKING SPACES	0 SPACES	NO
3	MINIMUM HANDICAPPED PARKING SPACES REQUIRED	N/A	N/A	NO

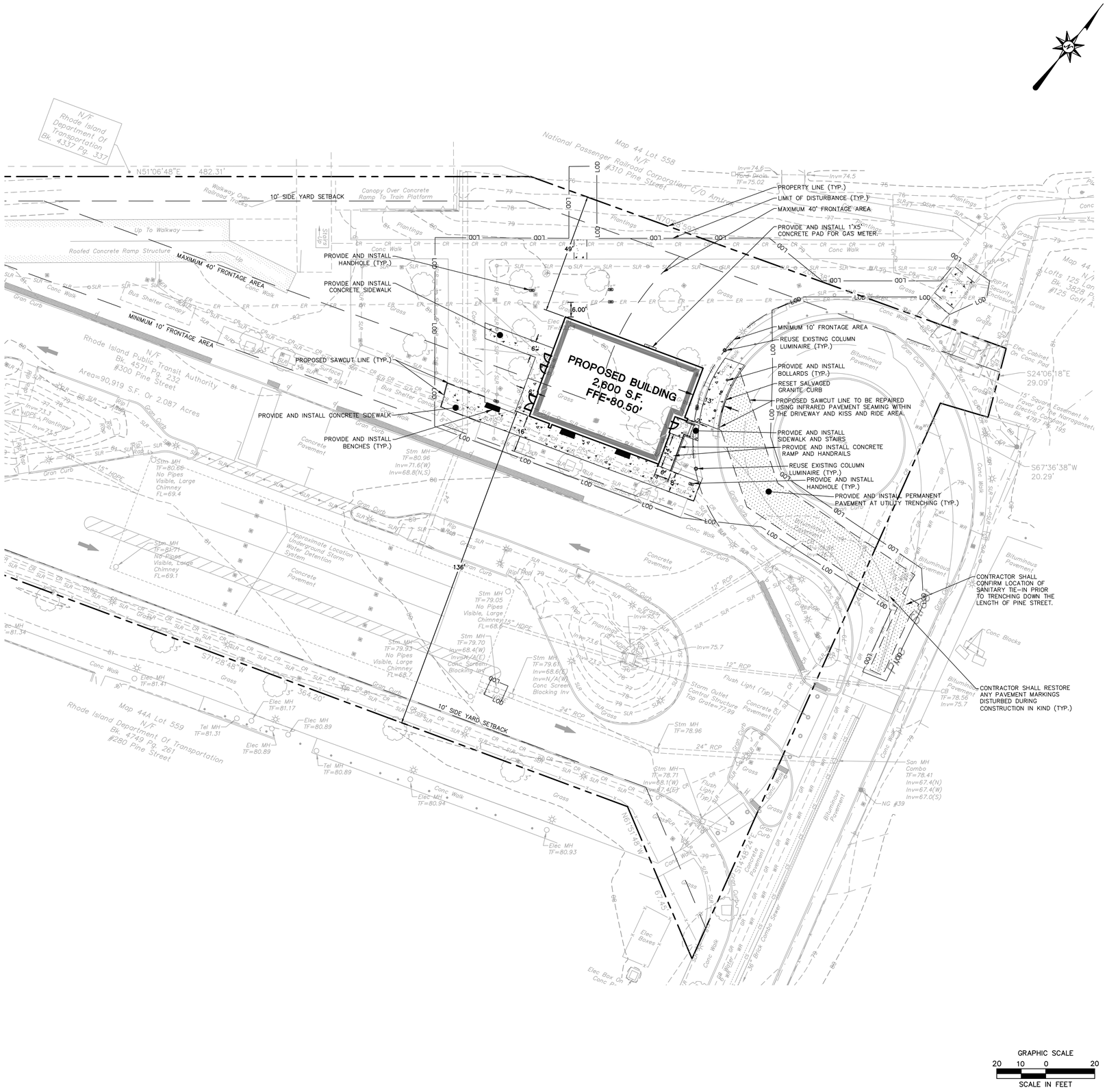

Architecture
Engineering
Environmental
Land Surveying

BL Companies

100 Constitution Plaza
10th Floor
Hartford, CT 06103
(860) 249-2200

SUZANNE M. KING
No. 10040
REGISTERED PROFESSIONAL ENGINEER
CIVIL

PROPOSED PASSENGER FACILITIES BUILDING

300 PINE STREET, PAWTUCKET
PROVIDENCE COUNTY, RHODE ISLAND

REVISIONS

No.	Date	Desc.

Designed	R.M.D.
Drawn	R.M.D.
Reviewed	T.A.H.
Scale	1"=20'
Project No.	2301115
Date	04/09/2024
CAD File: SP230111501	

Title

SITE PLAN

Sheet No.

SP-1

Xref (s) : B0230111501 ; XF230111501 ; XC230111501

4/18/2024, BROKAHUE, G:\CADD\35\01\2301115\DWG\SP230111501.DWG-SP-1 24X36.DWG

© 2024 BL COMPANIES, INC. THESE DRAWINGS SHALL NOT BE UTILIZED BY ANY PERSON, FIRM OR CORPORATION WITHOUT THE SPECIFIC WRITTEN PERMISSION OF BL COMPANIES.

GRADING/ DRAINAGE UTILITIES PLAN LEGEND

- PROPERTY LINE
- LIMIT OF DISTURBANCE (LOD)
- BUILDING SETBACK
- ELECTRIC LINE (E)
- SITE LIGHTING LINE (SL)
- GAS LINE (G)
- WATER LINE (W)
- FIRE WATER LINE (F)
- SANITARY SEWER LINE (S)
- TELECOMMUNICATIONS LINE (T)
- STORM LINE
- FLARED END SECTION
- [100] PROPOSED CONTOUR LINE
- [100.50] PROPOSED INTERMEDIATE CONTOUR LINE
- x [100.00] PROPOSED SPOT GRADE

ABBREVIATIONS
- TC=TOP OF CURB (TC=100.00)
- BC=BOTTOM OF CURB (BC=99.50)
- TW=TOP OF WALL (TW=108.00)
- BW=BOTTOM OF WALL (BW=100.00)
- MEX=MATCH EXISTING (MEX=100.00)

2% PROPOSED SURFACE SLOPE

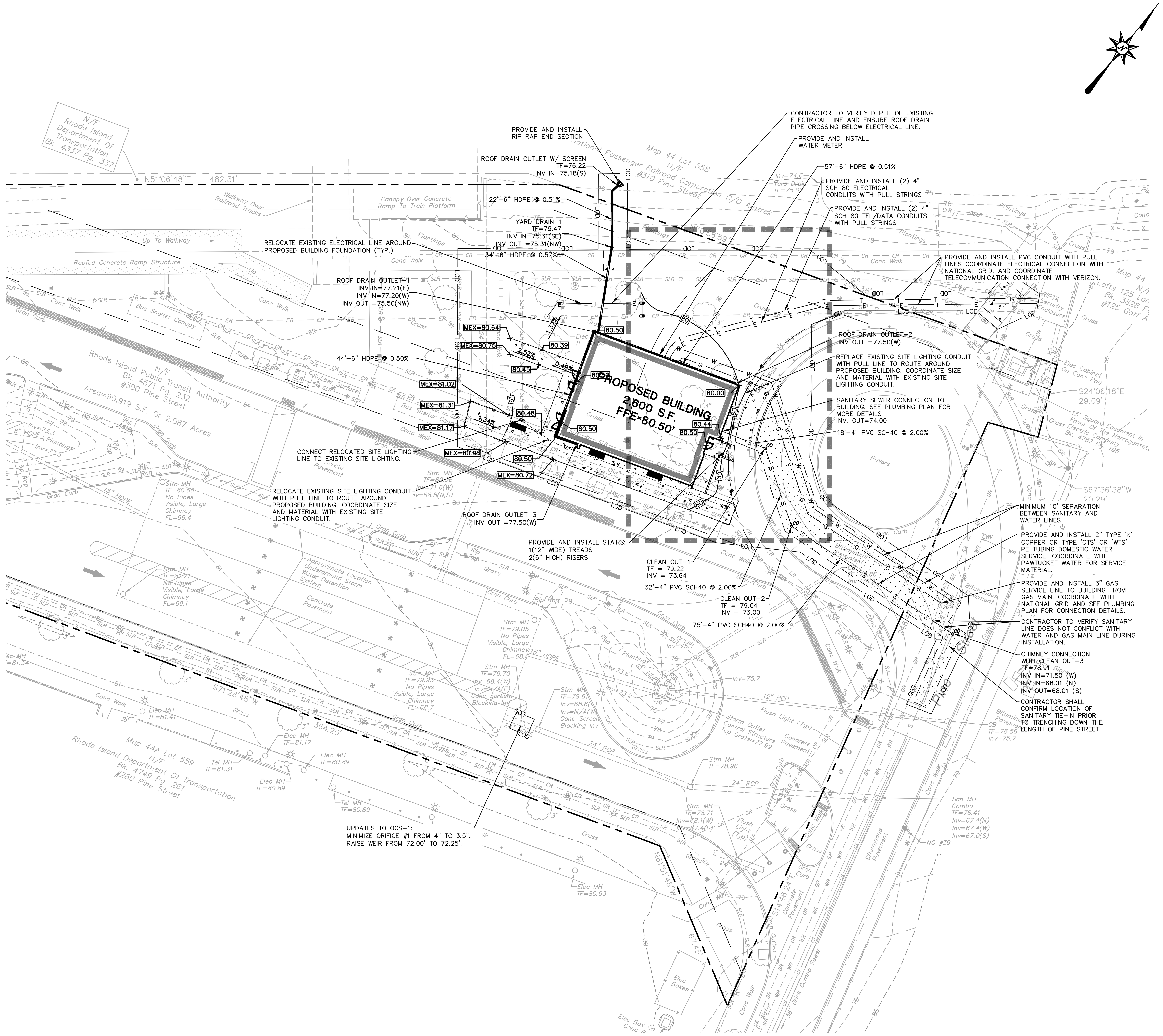

GRAPHIC SCALE 20 10 0 20 SCALE IN FEET

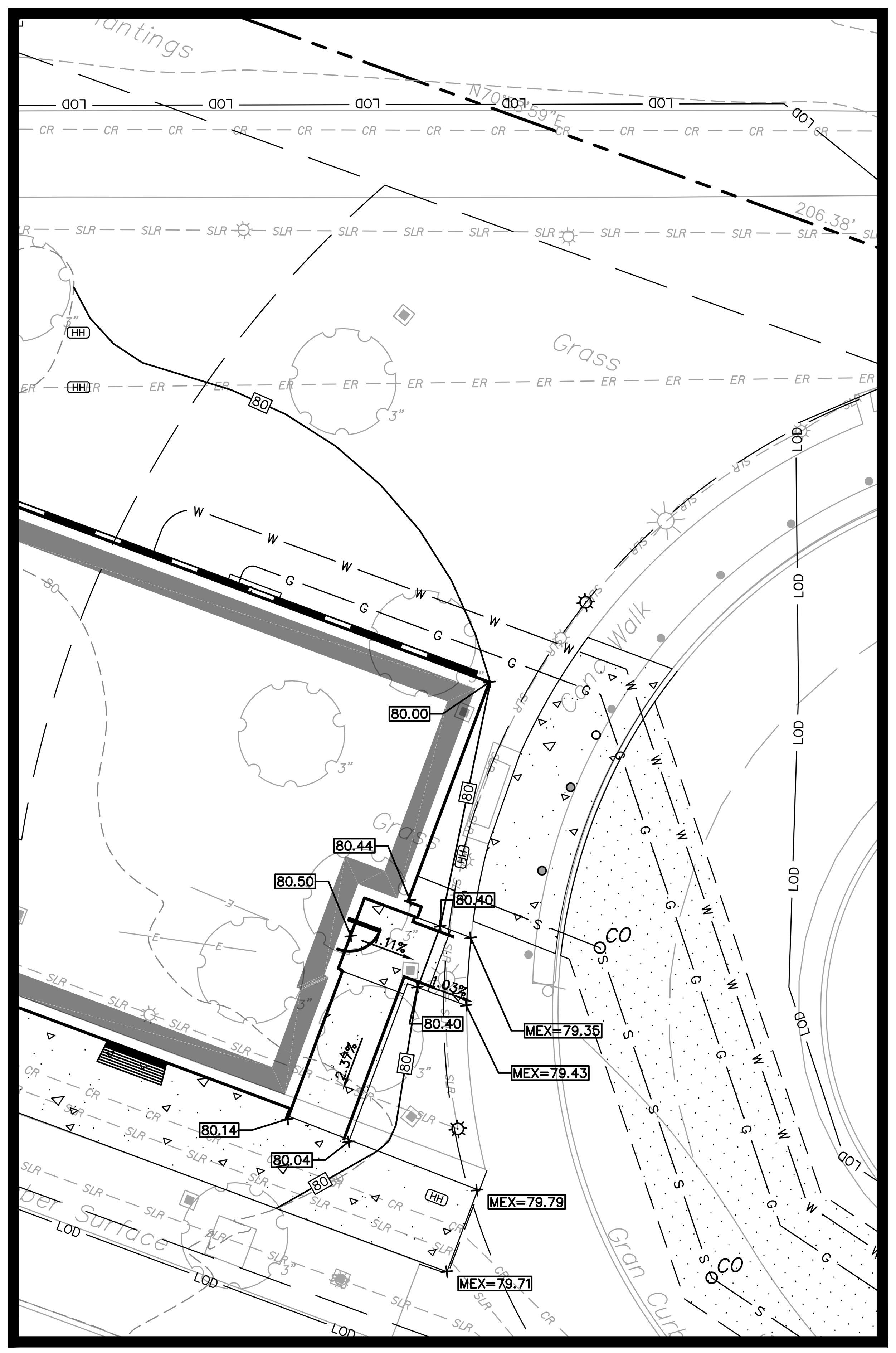

BLOW UP PLAN GRAPHIC SCALE

10 5 0 10 SCALE IN FEET

© 2024 BL COMPANIES, INC. THESE DRAWINGS SHALL NOT BE UTILIZED BY ANY PERSON, FIRM OR CORPORATION WITHOUT THE SPECIFIC WRITTEN PERMISSION OF BL COMPANIES.

BL Companies
Architecture Engineering Environmental Land Surveying
100 Constitution Plaza 10th Floor Hartford, CT 06103 (860) 249-2200

SUZANNE M. KING No. 10040 REGISTERED PROFESSIONAL ENGINEER CIVIL

PROPOSED PASSENGER FACILITIES BUILDING
300 PINE STREET, PAWTUCKET
PROVIDENCE COUNTY, RHODE ISLAND

REVISIONS: No. | Date | Desc.

Designed	R.M.D.
Drawn	R.M.D.
Reviewed	T.A.H.
Scale	1"=20'
Project No.	2301115
Date	04/09/2024
CAD File:	GU230111501

Title: GRADING, DRAINAGE, UTILITIES PLAN

Sheet No. GU-1

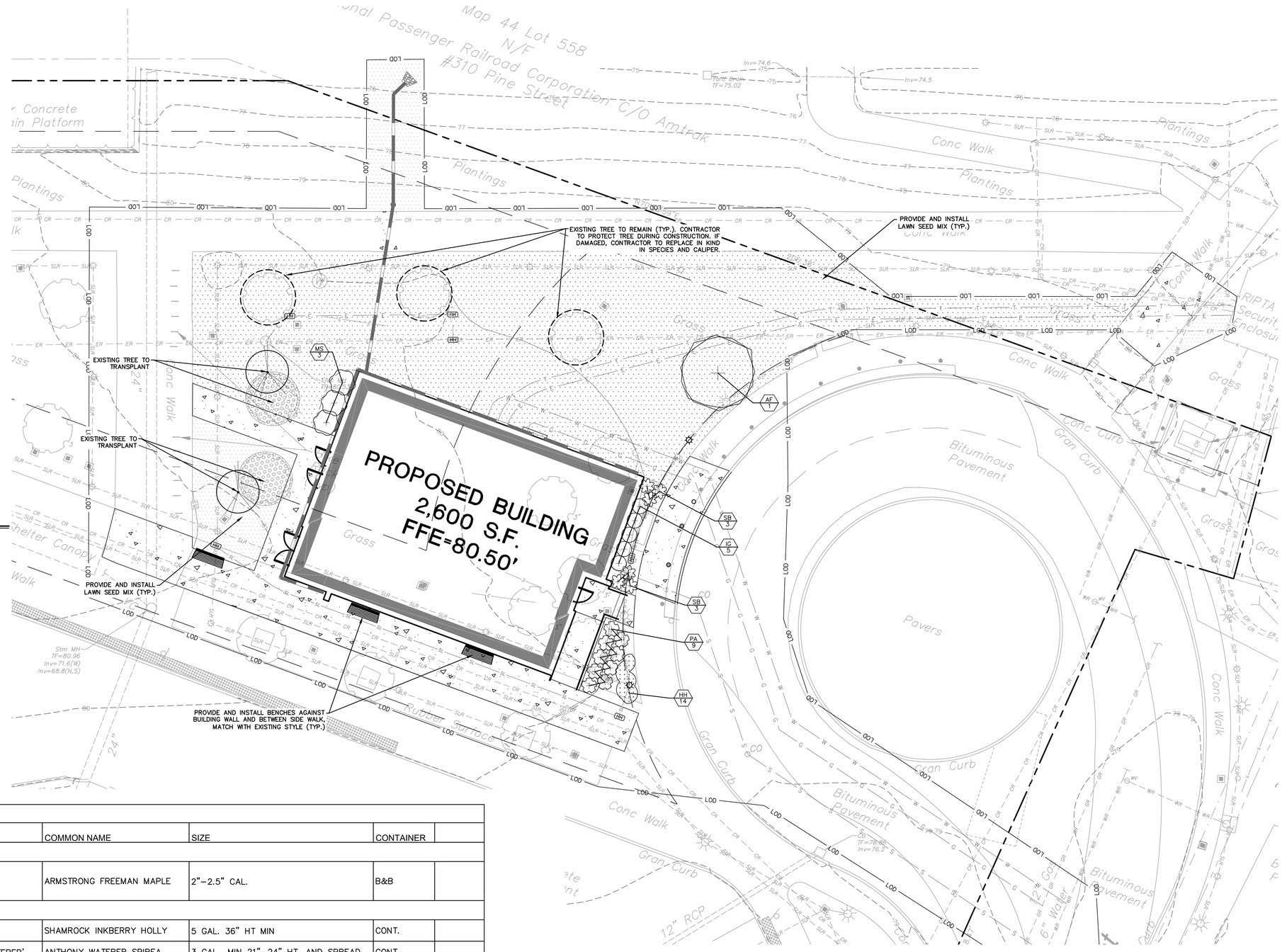

LEGEND

LOD	LIMIT OF DISTURBANCE
	PROVIDE AND INSTALL LAWN SEED MIX
	EXISTING TREE TO REMAIN
	TRANSPLANT EXISTING TREE

PLANT SCHEDULE

SYMBOL	CODE	QTY	BOTANICAL NAME	COMMON NAME	SIZE	CONTAINER	
TREES							
	AF	1	ACER X FREEMANII 'ARMSTRONG'	ARMSTRONG FREEMAN MAPLE	2"–2.5" CAL.	B&B	
SHRUBS							
	IG	5	ILEX GLABRA 'SHAMROCK'	SHAMROCK INKBERRY HOLLY	5 GAL. 36" HT MIN	CONT.	
	SB	6	SPIRAEA X BUMALDA 'ANTHONY WATERER'	ANTHONY WATERER SPIREA	3 GAL., MIN 21"–24" HT. AND SPREAD	CONT.	
GRASSES							
	MS	3	MISCANTHUS SINENSIS 'ADAGIO'	ADAGIO EULALIA GRASS	3 GAL.	CONT.	
	PA	9	PENNISETUM ALOPECUROIDES 'LITTLE BUNNY'	LITTLE BUNNY FOUNTAIN GRASS	1 GAL	CONT.	
SYMBOL	CODE	QTY	BOTANICAL NAME	COMMON NAME	SIZE	CONTAINER	SPACING
SHRUB AREAS							
	HH	14	HEMEROCALLIS X 'HAPPY RETURNS'	HAPPY RETURNS DAYLILY	1 GAL.	CONT.	18" o.c.

NOTES:
1) ALL SUBSTITUTIONS MUST RECEIVE APPROVAL FROM THE LANDSCAPE ARCHITECT PRIOR TO DELIVERY TO SITE.
2) PROVIDE AND INSTALL ALL PLANTS SHOWN ON THE PLANTING PLAN DRAWINGS; THE QUANTITIES IN THE PLANT LIST ARE PROVIDED FOR THE CONTRACTOR'S CONVENIENCE ONLY. IF DISCREPANCIES OCCUR, THE LARGER QUANTITY SHALL APPLY.
3) IF THERE IS A DISCREPANCY BETWEEN BOTANICAL AND COMMON NAME, BOTANICAL NAME PREVAILS.

SEE SHEET LL-2 FOR LANDSCAPE NOTES AND DETAILS

GRAPHIC SCALE
10 5 0 10
SCALE IN FEET

© 2024 BL COMPANIES, INC. THESE DRAWINGS SHALL NOT BE UTILIZED BY ANY PERSON, FIRM OR CORPORATION WITHOUT THE SPECIFIC WRITTEN PERMISSION OF BL COMPANIES.

Architecture
Engineering
Environmental
Land Surveying
BL Companies
100 Constitution Plaza
10th Floor
Hartford, CT 06103
(860) 249-2200

SUZANNE M. KING
No. 10040
REGISTERED PROFESSIONAL ENGINEER
CIVIL

PROPOSED PASSENGER FACILITIES BUILDING
300 PINE STREET, PAWTUCKET
PROVIDENCE COUNTY, RHODE ISLAND

REVISIONS
No. Date Desc.

Designed	J.C.W.
Drawn	N.Y.Y.
Reviewed	J.C.W.
Scale	1"=10'
Project No.	2301115
Date	04/09/2024
CAD File: LL2301111501	

Title
LANDSCAPE PLAN

Sheet No.
LL-1

Xref (s) : BD2301111501 ; XV2301111501 ; XC2301111501 ; XL2301111501

4/12/2024, BDCHANGE -G:\JOBS\25\JOB\2301115\DWG\LL2301111501.DWG\LL-1 24X36.DWG

SITE PLAN LEGEND

- PROPERTY LINE
- LOD — LIMIT OF DISTURBANCE
- BUILDING SETBACK
- SAWCUT LINE
- PROVIDE AND INSTALL GRANITE CURB
- PROVIDE AND INSTALL CONCRETE PAVEMENT STRUCTURE, REINFORCED CONCRETE SIDEWALK, OR MONOLITHIC CONCRETE CURB AND SIDEWALK
- PROVIDE AND INSTALL PERMANENT PAVEMENT AT UTILITY TRENCHING
- PROPOSED BUILDING
- HH — PROPOSED HANDHOLES
- PROPOSED LIGHT POLES AND LIGHTING FIXTURES
- X — TEMPORARY CONSTRUCTION FENCING
- POTENTIAL CONSTRUCTION LAYDOWN AREA

PHASING PLAN NOTES

1. CONTRACTOR SHALL COORDINATE WITH RIPTA, RIDOT, MBTA, AND AMTRAK FOR ANY WORK THAT MAY AFFECT THE PUBLICS USE OF THE BUS HUB AND TRAIN STATION.
2. CONTRACTOR TO MAINTAIN ACCESS TO WALKWAYS DURING CONSTRUCTION AND SHALL COORDINATE WITH OWNER FOR ALL TEMPORARY SHUT DOWNS OR RESTRICTIONS.
3. CONTRACTOR SHALL COORDINATE WITH RIPTA FOR TEMPORARY ACCESS TO THE BUS LOOP DURING CONSTRUCTION.
4. CONTRACTOR TO MAINTAIN TRAFFIC FLOW AND DROP-OFF AND PICK-UP ACCESS TO THE KISS AND RIDE LOOP FOR THE DURATION OF CONSTRUCTION.
3. CONTRACTOR TO UTILIZE METAL PLATES FOR UTILITY AND TRENCHING WORK AS NEEDED TO MINIMIZE SHUTDOWNS AROUND KISS AND RIDE LOOP.
4. CONTRACTOR TO SWEEP ROADWAYS AS NECESSARY AND TAKE PREVENTATIVE ACTION TO MINIMIZE SOIL TRACKING OFF-SITE ONTO PAVED AREAS AND SIDEWALKS.
5. CONTRACTOR TO UTILIZE STREET PARKING OR COMMUTER LOT PARKING FOR EMPLOYEES AND IS RESPONSIBLE FOR ANY COSTS ASSOCIATED WITH PARKING.
6. CONTRACTOR IS RESPONSIBLE FOR PROTECTING EXISTING INFRASTRUCTURE ON AND AROUND THE SITE DURING CONSTRUCTION. CONTRACTOR SHALL REPLACE ALL EXISTING INFRASTRUCTURE THAT IS DAMAGED DURING CONSTRUCTION, WHICH INCLUDES BUT IS NOT LIMITED TO: CONCRETE SIDEWALKS, ASPHALT PAVEMENT, GRASS AREAS, LANDSCAPING FEATURES, LIGHTING FIXTURES, HANDHOLES, MANHOLES, ETC.

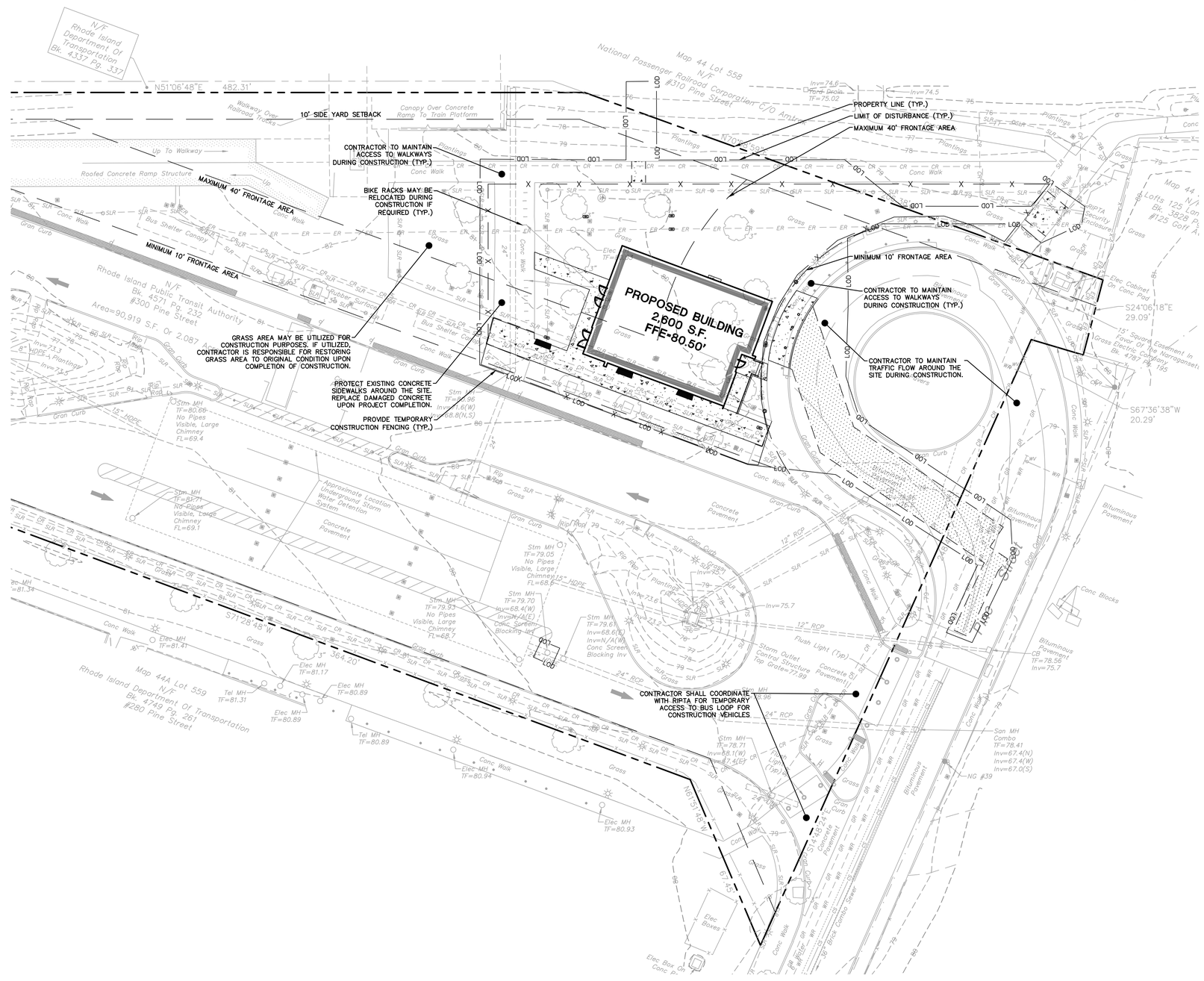

Architecture
Engineering
Environmental
Land Surveying
BL Companies
100 Constitution Plaza
10th Floor
Hartford, CT 06103
(860) 249-2200

SUZANNE M. KING
No. 10040
REGISTERED PROFESSIONAL ENGINEER
CIVIL

PROPOSED PASSENGER FACILITIES BUILDING

300 PINE STREET, PAWTUCKET
PROVIDENCE COUNTY, RHODE ISLAND

REVISIONS

No.	Date	Desc.

Designed	R.M.D.
Drawn	R.M.D.
Reviewed	S.M.K.
Scale	1"=20'
Project No.	2301115
Date	04/09/2024

CAD File: PH230111501

Title

PHASING PLAN

Sheet No.

PH-1

Xref (s) : B0230111501 ; XY230111501 ; XC230111501

4/10/2024, RBOGANNE, G:\JOBS\23\PH230111501\DWGS\PH230111501.DWG\PH-1 24X36.DWG

© 2024 BL COMPANIES, INC. THESE DRAWINGS SHALL NOT BE UTILIZED BY ANY PERSON, FIRM OR CORPORATION WITHOUT THE SPECIFIC WRITTEN PERMISSION OF BL COMPANIES.

EROSION CONTROL LEGEND:

	PROPERTY LINE
LOD	LIMIT OF DISTURBANCE
	BUILDING SETBACK
ILLUSTRATION	**CONTROL MEASURE**
SS	SILT SACKS AT CATCH BASINS SILT SOCK
	STOCKPILE AREA WITH DOUBLE ROW OF SILT FENCE
	CONCRETE WASHOUT PIT

SOIL TYPE

Ur	URBAN LAND

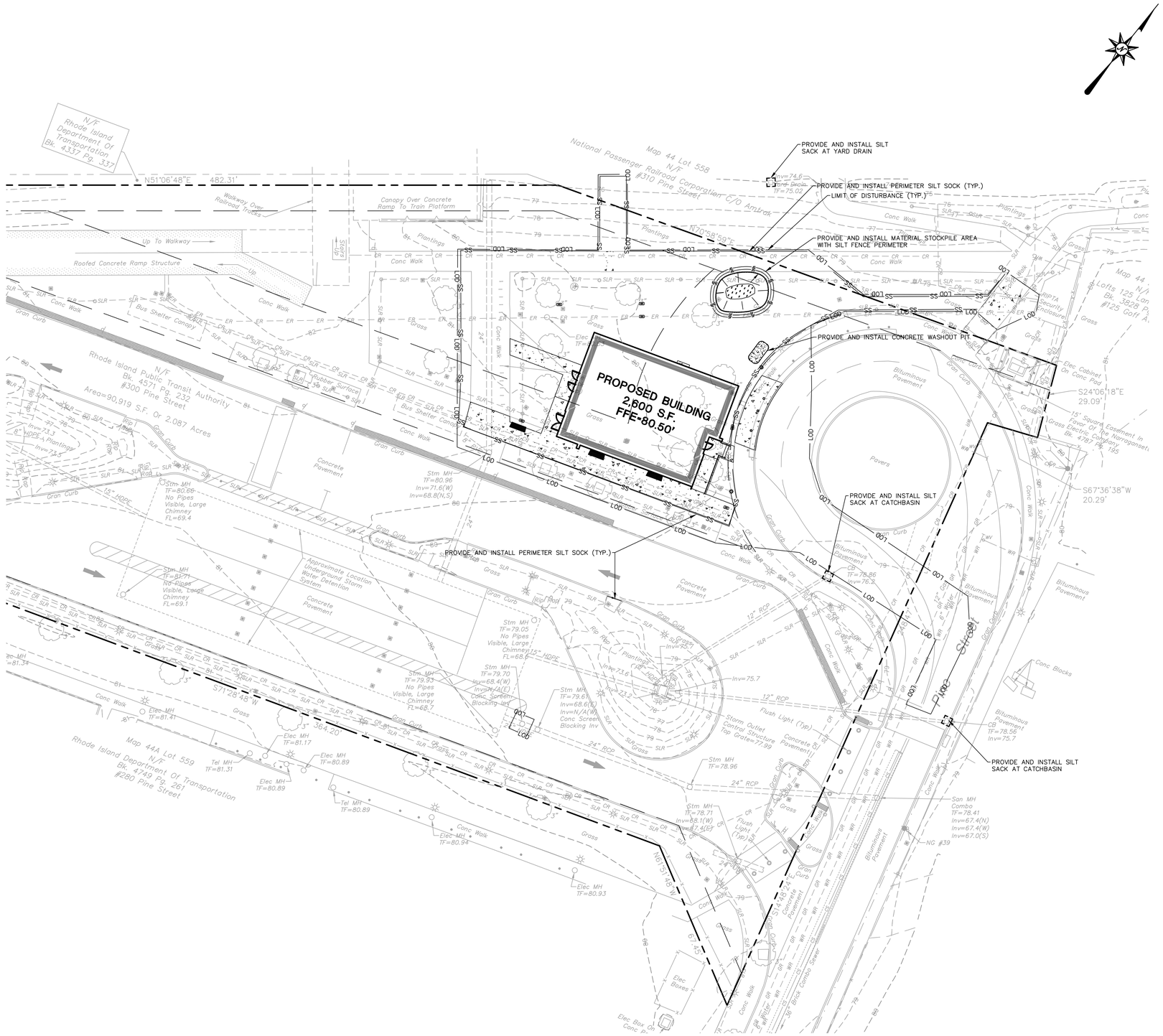

Architecture
Engineering
Environmental
Land Surveying

BL Companies

100 Constitution Plaza
10th Floor
Hartford, CT 06103
(860) 249-2200

SUZANNE M. KING
No. 10040
REGISTERED PROFESSIONAL ENGINEER CIVIL

PROPOSED PASSENGER FACILITIES BUILDING

300 PINE STREET, PAWTUCKET
PROVIDENCE COUNTY, RHODE ISLAND

REVISIONS		
No.	Date	Desc.

Designed	R.M.D.
Drawn	R.M.D.
Reviewed	T.A.H.
Scale	1"=20'
Project No.	2301115
Date	04/09/2024
CAD File: EC230111501	

Title

EROSION AND SEDIMENTATION CONTROL PLAN

Sheet No.

EC-1

Xref (s) : BD230111501 ; XC230111501 ; XC230111502 ; XV230111501

© 2024 BL COMPANIES, INC. THESE DRAWINGS SHALL NOT BE UTILIZED BY ANY PERSON, FIRM OR CORPORATION WITHOUT THE SPECIFIC WRITTEN PERMISSION OF BL COMPANIES.

SEDIMENT AND EROSION CONTROL NOTES

SEDIMENT AND EROSION CONTROL NOTES – RHODE ISLAND

SEDIMENT & EROSION CONTROL NARRATIVE
THE SEDIMENT AND EROSION CONTROL PLAN WAS DEVELOPED TO PROTECT THE EXISTING ROADWAY AND STORM DRAINAGE SYSTEMS, ADJACENT PROPERTIES, AND ANY ADJACENT WETLAND AREA AND ANY ADJACENT WATER COURSE FROM SEDIMENT LADEN SURFACE RUNOFF AND EROSION. A CONSTRUCTION SEQUENCE IS PROVIDED TO PROVIDE SURFACE RUNOFF EROSION CONTROLS PRIOR TO THE BEGINNING OF PROJECT DEMOLITION AND/OR CONSTRUCTION.

CONSTRUCTION SCHEDULE
THE ANTICIPATED STARTING DATE FOR CONSTRUCTION IS SUMMER 2024 WITH COMPLETION ANTICIPATED WINTER 2025. APPROPRIATE SEDIMENT AND EROSION CONTROL MEASURES AS DESCRIBED HEREIN SHALL BE INSTALLED BY THE CONTRACTOR PRIOR TO THE COMMENCEMENT OF ALL DEMOLITION OR CONSTRUCTION ACTIVITY. SCHEDULE WORK TO MINIMIZE THE LENGTH OF TIME THAT BARE SOIL WILL BE EXPOSED.

CONTINGENCY EROSION PLAN
THE CONTRACTOR SHALL INSTALL ALL SPECIFIED SEDIMENT AND EROSION CONTROL MEASURES AND WILL BE REQUIRED TO MAINTAIN THEM IN THEIR INTENDED FUNCTIONING CONDITION. THE AGENTS OF THE MUNICIPALITY SHALL HAVE THE AUTHORITY TO REQUIRE SUPPLEMENTAL MAINTENANCE OR ADDITIONAL MEASURES IF FIELD CONDITIONS ARE ENCOUNTERED BEYOND WHAT WOULD NORMALLY BE ANTICIPATED.

CONSTRUCTION SEQUENCE
THE FOLLOWING CONSTRUCTION SEQUENCE IS RECOMMENDED:

1. CONTACT MUNICIPALITY AGENT AT LEAST FORTY-EIGHT (48) HOURS PRIOR TO COMMENCEMENT OF ANY DEMOLITION, CONSTRUCTION OR REGULATED ACTIVITY ON THIS PROJECT.
2. CLEARING LIMITS SHALL BE PHYSICALLY MARKED IN THE FIELD AND APPROVED BY THE MUNICIPALITY AGENT PRIOR TO THE START OF WORK ON THE SITE. INSTALL TREE PROTECTION AND PERIMETER SILT FENCE.
3. CONSTRUCT STONE CONSTRUCTION ENTRANCE ANTI-TRACKING PADS AT CONSTRUCTION ENTRANCES/EXITS AND INSTALL FILTER FABRIC AROUND GRATES OF CATCH BASINS OR INSTALL SILT SACKS ON CATCH BASIN INLETS ON OFF SITE ROADS. INSTALL SILT FENCE AND OTHER EROSION CONTROL DEVICES INDICATED ON THESE PLANS AT PERIMETER OF PROPOSED SITE DISTURBANCE AND INSTALL ALL EROSION CONTROL MEASURES AND TREE PROTECTION INDICATED ON THESE PLANS. INSTALL SEDIMENT BASINS AND SEDIMENT TRAPS IF REQUIRED AT LOW AREAS OF SITE OR AS ORDERED BY THE ENGINEER OR AS SHOWN ON THESE PLANS.
4. CLEAR AND GRUB SITE. STOCKPILE CHIPS. STOCKPILE TOPSOIL. INSTALL SEDIMENT AND EROSION CONTROLS AT STOCKPILES.
5. BUILDING AND SITE DEMOLITION AND REMOVAL. PAVEMENT REMOVAL.
6. INSTALL SILT SOCK, COMMENCE INSTALLATION OF STORM DRAINAGE SYSTEM.
7. COMMENCE EARTHWORK. INSTALL ADDITIONAL SEDIMENT AND EROSION CONTROLS AS WORK PROGRESSES AND CONTINUE STORM DRAINAGE SYSTEM CONSTRUCTION, TOPSOIL AND SEED SLOPES WHICH HAVE ACHIEVED FINAL SITE GRADING.
8. CONSTRUCTION STAKING OF ALL BUILDING CORNERS, UTILITIES, ACCESS DRIVES.
9. ROUGH GRADING AND FILLING OF SUBGRADES AND SLOPES.
10. IMMEDIATELY UPON DISCOVERING UNFORESEEN CIRCUMSTANCES POSING THE POTENTIAL FOR ACCELERATED EROSION AND/OR SEDIMENT POLLUTION, THE OPERATOR SHALL IMPLEMENT APPROPRIATE BEST MANAGEMENT PRACTICES TO ELIMINATE THE POTENTIAL FOR ACCELERATED EROSION AND/OR SEDIMENT POLLUTION.
11. BEFORE DISPOSING OF SOIL OR RECEIVING BORROW FOR THE SITE, THE CONTRACTOR MUST PROVIDE EVIDENCE THAT EACH SPOIL OR BORROW AREA HAS A SEDIMENT AND EROSION CONTROL PLAN APPROVED BY THE MUNICIPALITY AND WHICH IS BEING IMPLEMENTED AND MAINTAINED. THE CONTRACTOR SHALL ALSO NOTIFY THE MUNICIPALITY IN WRITING OF ALL RECEIVING SPOIL AND BORROW AREAS WHEN THEY HAVE BEEN IDENTIFIED.
12. CONTINUE INSTALLATION OF STORM DRAINAGE AS SUBGRADE ELEVATIONS ARE ACHIEVED.
13. BUILDING FOUNDATION SUBGRADE AND PAD SUBGRADE PREPARATION.
14. BUILDING FOUNDATION CONSTRUCTION. BEGIN BUILDING SUPERSTRUCTURE
15. THROUGHOUT CONSTRUCTION SEQUENCE, REMOVE SEDIMENT FROM BEHIND SILT FENCES, HAY BALES AND OTHER EROSION CONTROL DEVICES, AND FROM SEDIMENT BASINS AND SEDIMENT TRAPS AS REQUIRED. REMOVAL SHALL BE ON A PERIODIC BASIS (EVERY SIGNIFICANT RAINFALL OF 0.25 INCH OR GREATER). INSPECTION OF SEDIMENT AND EROSION CONTROL MEASURES SHALL BE ON A WEEKLY BASIS AND AFTER EACH RAINFALL OF 0.25 INCHES OR GREATER. SEDIMENT COLLECTED SHALL BE DEPOSITED AND SPREAD EVENLY UPLAND ON SLOPES DURING CONSTRUCTION.
16. INSTALL SANITARY LATERAL AND UTILITIES. COMPLETE STORM DRAINAGE SYSTEM.
17. INSTALL SITE LIGHTING.
18. COMPLETE GRADING TO SUBGRADES.
19. CONSTRUCT CURBS, PAVEMENT STRUCTURE AND SIDEWALKS.
20. CONDUCT FINE GRADING.
21. FINAL FINE GRADING OF SLOPE AND NON-PAVED AREAS.
22. PLACE 4" TOPSOIL ON SLOPES AFTER FINAL GRADING IS COMPLETED. FERTILIZE SEED AND MULCH. SEED MIXTURE TO BE INSTALLED AUGUST-SEPTEMBER USE EROSION CONTROL BLANKETS AS REQUIRED OR ORDERED FOR SLOPES GREATER THAN 3:1 AND AS SHOWN ON LANDSCAPE PLANS OR EROSION CONTROL PLANS. FOR TEMPORARY STABILIZATION BEYOND SEEDING DATES USE ANNUAL RYE AT 4.0 LBS/1,000 S.F. FERTILIZE WITH 10-10-10 AT 1.0 LBS. OF NITROGEN PER 1,000 S.F. AND LIME AT 100 LBS/1,000 S.F. (MAX.).
23. LANDSCAPE INTERIOR NON-PAVED AREAS, AND PERIMETER AREAS.
24. INSTALL SIGNING AND PAVEMENT MARKINGS AS NEEDED
25. CLEAN STORM DRAINAGE PIPE STRUCTURES, DETENTION SYSTEMS AND WATER QUALITY DEVICES OF DEBRIS AND SEDIMENT.
26. UPON DIRECTION OF THE MUNICIPALITY AGENT, SEDIMENT AND EROSION CONTROL MEASURES SHALL BE REMOVED FOLLOWING STABILIZATION OF THE SITE.

OPERATION REQUIREMENTS

CLEARING AND GRUBBING OPERATIONS
1. ALL SEDIMENT AND EROSION CONTROL MEASURES, INCLUDING THE CONSTRUCTION OF TEMPORARY SEDIMENTATION BASINS AND STONE CONSTRUCTION ENTRANCE ANTI-TRACKING PADS, WILL BE INSTALLED PRIOR TO THE START OF CLEARING AND GRUBBING AND DEMOLITION OPERATIONS.
2. FOLLOWING INSTALLATION OF ALL SEDIMENT AND EROSION CONTROL MEASURES, THE CONTRACTOR SHALL NOT PROCEED WITH GRADING, FILLING OR OTHER CONSTRUCTION OPERATIONS UNTIL THE ENGINEER HAS INSPECTED AND APPROVED ALL INSTALLATIONS.
3. THE CONTRACTOR SHALL TAKE EXTREME CARE DURING CLEARING AND GRUBBING OPERATIONS SO AS NOT TO DISTURB UNPROTECTED WETLAND AREAS OR SEDIMENT AND EROSION CONTROL DEVICES.
4. FOLLOWING THE COMPLETION OF CLEARING AND GRUBBING OPERATIONS, ALL AREAS SHALL BE STABILIZED WITH TOPSOIL AND SEEDING OR CRUSHED STONE AS SOON AS PRACTICAL.

ROUGH GRADING OPERATIONS

1. DURING THE REMOVAL AND/OR PLACEMENT OF EARTH AS INDICATED ON THE GRADING PLAN, TOPSOIL SHALL BE STRIPPED AND APPROPRIATELY STOCKPILED FOR REUSE.
2. ALL STOCKPILED TOPSOIL SHALL BE SEEDED, MULCHED WITH HAY, AND ENCLOSED BY A SILTATION FENCE.

FILLING OPERATIONS

1. PRIOR TO FILLING, ALL SEDIMENT AND EROSION CONTROL DEVICES SHALL BE PROPERLY IMPLEMENTED, MAINTAINED AND FULLY INSTALLED, AS DIRECTED BY THE ENGINEER AND AS SHOWN ON THIS PLAN.
2. ALL FILL MATERIAL SHALL BE GOOD QUALITY, WITH LESS THAN 5% FINES PASSING THROUGH A #200 SIEVE (BANK RUN), SHALL BE PLACED IN LIFT THICKNESSES NOT GREATER THAN THAT SPECIFIED IN PROJECT SPECIFICATIONS AND/OR THE PROJECT GEOTECHNICAL REPORT. LIFTS SHALL BE COMPACTED TO 95% MAX. DRY DENSITY MODIFIED PROCTOR OR AS SPECIFIED IN THE CONTRACT SPECIFICATIONS OR IN THE GEOTECHNICAL REPORT.
3. AS GENERAL GRADING OPERATIONS PROGRESS, ANY TEMPORARY DIVERSION DITCHES SHALL BE RAISED OR LOWERED, AS NECESSARY, TO DIVERT SURFACE RUNOFF TO THE SEDIMENT BASINS OR SEDIMENT TRAPS.

PLACEMENT OF DRAINAGE STRUCTURES, UTILITIES, AND BUILDING CONSTRUCTION OPERATIONS.

1. SILT FENCES SHALL BE INSTALLED AT THE DOWNHILL SIDES OF BUILDING EXCAVATIONS, MUD PUMP DISCHARGES, AND UTILITY TRENCH MATERIAL STOCKPILES. HAY BALES/STRAW BALES MAY BE USED IF SHOWN ON THE SEDIMENT AND EROSION CONTROL PLANS OR IF DIRECTED BY THE CIVIL ENGINEER.

FINAL GRADING AND PAVING OPERATIONS

1. ALL INLET AND OUTLET PROTECTION SHALL BE PLACED AND MAINTAINED AS SHOWN ON SEDIMENT AND EROSION CONTROL PLANS AND DETAILS, AND AS DESCRIBED IN SPECIFICATIONS AND AS DESCRIBED HEREIN.
2. NO CUT OR FILL SLOPES SHALL EXCEED 2:1 EXCEPT WHERE STABILIZED BY ROCK FACED EMBANKMENTS OR EROSION CONTROL BLANKETS, OR JUTE MESH AND VEGETATION. ALL SLOPES SHALL BE SEEDED, AND ANY ROAD OR DRIVEWAY SHOULDER AND BANKS SHALL BE STABILIZED IMMEDIATELY UPON COMPLETION OF FINAL GRADING UNTIL TURF IS ESTABLISHED.
3. PAVEMENT SUB-BASE AND BASE COURSES SHALL BE INSTALLED OVER AREAS TO BE PAVED AS SOON AS FINAL SUB-GRADES ARE ESTABLISHED AND UNDERGROUND UTILITIES AND STORM DRAINAGE SYSTEMS HAVE BEEN INSTALLED.
4. AFTER CONSTRUCTION OF PAVEMENT, TOPSOIL, FINAL SEED, MULCH AND LANDSCAPING, REMOVE ALL TEMPORARY SEDIMENT AND EROSION CONTROL DEVICES ONLY AFTER ALL AREAS HAVE BEEN PAVED AND/OR GRASS HAS BEEN WELL ESTABLISHED AND THE SITE IS STABLE AND HAS BEEN INSPECTED AND APPROVED BY THE MUNICIPALITY.

INSTALLATION OF SEDIMENTATION AND EROSION CONTROL MEASURES

I. SILTATION FENCE
A. DIG A SIX INCH TRENCH ON THE UPHILL SIDE OF THE DESIGNATED FENCE LINE LOCATION.

B. POSITION THE POST AT THE BACK OF THE TRENCH (DOWNHILL SIDE), AND HAMMER THE POST AT LEAST 1.5 FEET INTO THE GROUND.

C. LAY THE BOTTOM SIX INCHES OF THE FABRIC INTO THE TRENCH TO PREVENT UNDERMINING BY STORM WATER RUN-OFF.

D. BACKFILL THE TRENCH AND COMPACT.

II. HAY BALES/STRAW BALES
A. BALES SHALL BE PLACED IN A SINGLE ROW, LENGTHWISE, ORIENTED PARALLEL TO THE CONTOUR, WITH ENDS OF ADJACENT BALES TIGHTLY ABUTTING ONE ANOTHER.

B. BALES SHALL BE ENTRENCHED AND BACKFILLED. A TRENCH SHALL BE EXCAVATED THE WIDTH OF A BALE AND THE LENGTH OF THE PROPOSED BARRIER TO A MINIMUM DEPTH OF FOUR INCHES. AFTER THE BALES ARE STAKED, THE EXCAVATED SOIL SHALL BE BACKFILLED AGAINST THE BARRIER.

C. EACH BALE SHALL BE SECURELY ANCHORED BY AT LEAST TWO (2) STAKES.

D. THE GAPS BETWEEN BALES SHALL BE WEDGED WITH STRAW TO PREVENT WATER LEAKAGE.

E. THE BARRIER SHALL BE EXTENDED TO SUCH A LENGTH THAT THE BOTTOMS OF THE END BALES ARE HIGHER IN ELEVATION THAN THE TOP OF THE LOWEST MIDDLE BALE, TO ENSURE THAT RUN-OFF WILL FLOW EITHER THROUGH OR OVER THE BARRIER, BUT NOT AROUND IT.

OPERATION AND MAINTENANCE OF SEDIMENT AND EROSION CONTROL MEASURES
I. SILTATION FENCE
A. ALL SILTATION FENCES SHALL BE INSPECTED AS A MINIMUM WEEKLY OR AFTER EACH RAINFALL. ALL DETERIORATED FABRIC AND DAMAGED POSTS SHALL BE REPLACED AND PROPERLY REPOSITIONED IN ACCORDANCE WITH THIS PLAN.

B. SEDIMENT DEPOSITS SHALL BE REMOVED FROM BEHIND THE FENCE WHEN THEY REACH A MAXIMUM HEIGHT OF ONE FOOT.

II. HAY BALES/STRAW BALES
A. ALL HAY BALE/STRAW BALE RINGS SHALL BE INSPECTED FOLLOWING EACH RAINFALL. REPAIR OR REPLACEMENT SHALL BE PROMPTLY MADE AS NEEDED.

B. DEPOSITS SHALL BE REMOVED AND CLEANED-OUT IF ONE HALF OF THE ORIGINAL HEIGHT OF THE BALES BECOMES FILLED WITH SEDIMENT.

SEDIMENT AND EROSION CONTROL PLAN
1. HAY BALE/STRAW BALE FILTERS WILL BE INSTALLED AT ALL CULVERT OUTLETS IF CULVERT OUTLETS ARE APPLICABLE TO THIS PROJECT AND SILTATION FENCE INSTALLED ALONG THE TOE OF ALL CRITICAL CUT AND FILL SLOPES.
2. CULVERT DISCHARGE AREAS WILL BE PROTECTED WITH RIP RAP CHANNELS. ENERGY DISSIPATORS WILL BE INSTALLED AS SHOWN ON THESE PLANS AND AS NECESSARY.
3. CATCH BASINS WILL BE PROTECTED WITH HAY BALE/STRAW BALE FILTERS, SILT SACKS, SILTATION FENCE, OR OTHER INLET PROTECTION DEVICES PER DETAILS, THROUGHOUT THE CONSTRUCTION PERIOD AND UNTIL ALL DISTURBED AREAS ARE THOROUGHLY STABILIZED.
4. ALL SEDIMENT AND EROSION CONTROL MEASURES WILL BE INSTALLED IN ACCORDANCE WITH THE STANDARDS AND SPECIFICATIONS OF THE RHODE ISLAND SOIL EROSION AND SEDIMENT CONTROL HANDBOOK, LATEST EDITION.
5. SEDIMENT AND EROSION CONTROL MEASURES WILL BE INSTALLED PRIOR TO DEMOLITION AND/OR CONSTRUCTION WHENEVER POSSIBLE.
6. ALL CONTROL MEASURES WILL BE MAINTAINED IN EFFECTIVE CONDITION THROUGHOUT THE DEMOLITION AND CONSTRUCTION PERIOD UNTIL THE SITE IS DETERMINED TO BE STABILIZED BY THE AUTHORITY HAVING JURISDICTION.
7. ADDITIONAL CONTROL MEASURES WILL BE INSTALLED DURING THE CONSTRUCTION PERIOD, IF NECESSARY OR REQUIRED OR AS DIRECTED BY THE CIVIL ENGINEER OR BY THE AUTHORITY HAVING JURISDICTION.
8. SEDIMENT REMOVED FROM EROSION CONTROL STRUCTURES WILL BE DISPOSED IN A MANNER WHICH IS CONSISTENT WITH THE INTENT AND REQUIREMENTS OF THE SEDIMENT AND EROSION CONTROL PLANS, NOTES, AND DETAILS.
9. CONTRACTOR IS ASSIGNED THE RESPONSIBILITY FOR IMPLEMENTING THIS SEDIMENT AND EROSION CONTROL PLAN. THIS RESPONSIBILITY INCLUDES THE INSTALLATION AND MAINTENANCE OF CONTROL MEASURES, INFORMING ALL PARTIES ENGAGED ON THE CONSTRUCTION SITE OF THE REQUIREMENTS AND OBJECTIVES OF THE PLAN, NOTIFICATION OF THE MUNICIPALITY OFFICE OR AUTHORITY HAVING JURISDICTION OF ANY TRANSFER OF THIS RESPONSIBILITY AND FOR CONVEYING A COPY OF THE SEDIMENT AND EROSION CONTROL PLAN IF THE TITLE TO THE LAND IS TRANSFERRED.

SEDIMENT AND EROSION CONTROL NOTES
1. THE SEDIMENT AND EROSION CONTROL PLAN IS ONLY INTENDED TO DESCRIBE THE SEDIMENT AND EROSION CONTROL TREATMENT FOR THIS SITE. SEE SEDIMENT AND EROSION CONTROL DETAILS AND CONSTRUCTION SEQUENCE. REFER TO SITE PLAN FOR GENERAL INFORMATION AND OTHER CONTRACT PLANS FOR APPROPRIATE INFORMATION.
2. CONTRACTOR IS RESPONSIBLE FOR IMPLEMENTING THIS SEDIMENT AND EROSION CONTROL PLAN. THIS RESPONSIBILITY INCLUDES THE PROPER INSTALLATION AND MAINTENANCE OF SEDIMENT AND EROSION CONTROL MEASURES, INFORMING ALL PARTIES ENGAGED WITH CONSTRUCTION ON THE SITE OF THE REQUIREMENTS AND OBJECTIVES OF THIS PLAN, INFORMING THE AUTHORITY HAVING JURISDICTION OR COUNTY SOILS CONSERVATION DISTRICT OR INLAND WETLANDS AGENCY OF ANY TRANSFER OF THIS RESPONSIBILITY, AND FOR CONVEYING A COPY OF THE SEDIMENT & EROSION CONTROL PLAN IF THE TITLE TO THE LAND IS TRANSFERRED.
3. AN EROSION CONTROL BOND MAY BE REQUIRED TO BE POSTED WITH THE CITY OF PAWTUCKET TO ENSURE IMPLEMENTATION OF THE SEDIMENT AND EROSION CONTROL MEASURES. THE CONTRACTOR SHALL BE RESPONSIBLE FOR THE POSTING OF THIS BOND AND FOR INQUIRIES TO THE CITY OF PAWTUCKET FOR INFORMATION ON THE METHOD, TYPE AND AMOUNT OF THE BOND POSTING UNLESS OTHERWISE DIRECTED BY THE OWNER.
4. VISUAL SITE INSPECTIONS SHALL BE CONDUCTED WEEKLY, AND AFTER EACH MEASURABLE PRECIPITATION EVENT OF 0.25 INCHES OR GREATER BY QUALIFIED PERSONNEL, TRAINED AND EXPERIENCED IN SEDIMENT AND EROSION CONTROL, TO ASCERTAIN THAT THE SEDIMENT AND EROSION CONTROL (E&S) BMPS ARE OPERATIONAL AND EFFECTIVE IN PREVENTING POLLUTION. A WRITTEN REPORT OF EACH INSPECTION SHALL BE KEPT, AND INCLUDE:
   A) A SUMMARY OF THE SITE CONDITIONS, E&S BMPS, AND COMPLIANCE; AND
   B) THE DATE, TIME, AND THE NAME OF THE PERSON CONDUCTING THE INSPECTION
   C) TURBIDITY TESTING AS REQUIRED BY THE GENERAL PERMIT (NPDES)
5. THE CONTRACTOR SHALL CONSTRUCT ALL SEDIMENT AND EROSION CONTROLS IN ACCORDANCE WITH RHODE ISLAND SOIL EROSION AND SEDIMENT CONTROL HANDBOOK, LATEST EDITION IN ACCORDANCE WITH THE CONTRACT DOCUMENTS, AND AS DIRECTED BY THE MUNICIPALITY. THE CONTRACTOR SHALL KEEP A COPY OF THE GUIDELINES ON-SITE FOR REFERENCE DURING CONSTRUCTION.
6. ADDITIONAL AND/OR ALTERNATIVE SEDIMENT AND EROSION CONTROL MEASURES MAY BE INSTALLED DURING THE CONSTRUCTION PERIOD IF FOUND NECESSARY BY THE CONTRACTOR, OWNER, SITE ENGINEER, MUNICIPALITY, OR GOVERNING AGENCIES. THE CONTRACTOR SHALL CONTACT THE OWNER AND APPROPRIATE GOVERNING AGENCIES FOR APPROVAL IF ALTERNATIVE CONTROLS OTHER THAN THOSE SHOWN ON THE PLANS ARE PROPOSED.
7. THE CONTRACTOR SHALL INSPECT ALL SEDIMENT AND EROSION CONTROLS BEFORE AND AFTER EACH STORM (0.25 INCHES OR GREATER RAINFALL), OR AT LEAST WEEKLY, TO VERIFY THAT THE CONTROLS ARE OPERATING PROPERLY AND MAKE REPAIRS WHERE NECESSARY.
8. THE CONTRACTOR SHALL KEEP A SUPPLY OF SEDIMENT AND EROSION CONTROL MATERIAL (HAY BALES, SILT FENCE, JUTE MESH, RIP RAP, ETC.) ON-SITE FOR MAINTENANCE AND EMERGENCY REPAIRS.
9. PROTECT EXISTING TREES THAT ARE TO BE SAVED BY FENCING AT THE DRIP LINE OR AS SHOWN WITH SNOW FENCE, ORANGE SAFETY FENCE, OR EQUIVALENT FENCING. ANY LIMB TRIMMING SHOULD BE DONE BEFORE CONSTRUCTION BEGINS IN THAT AREA; FENCING SHALL BE MAINTAINED AND REPAIRED DURING CONSTRUCTION.
10. INSTALL PERIMETER SEDIMENT AND EROSION CONTROLS PRIOR TO CLEARING OR CONSTRUCTION. ALL CONSTRUCTION SHALL BE CONTAINED WITHIN THE LIMIT OF DISTURBANCE, WHICH SHALL BE MARKED WITH SILT FENCE, SAFETY FENCE, HAY BALES, RIBBONS, OR OTHER MEANS PRIOR TO CLEARING. CONSTRUCTION ACTIVITY SHALL REMAIN ON THE UPHILL SIDE OF THE SILT FENCE UNLESS WORK IS SPECIFICALLY CALLED FOR ON THE DOWNHILL SIDE OF THE FENCE.
11. TOPSOIL SHALL BE STRIPPED AND STOCKPILED FOR USE IN FINAL LANDSCAPING. ALL EARTH STOCKPILES SHALL HAVE HAY BALES OR SILT FENCE AROUND THE LIMIT OF PILE. PILES SHALL BE TEMPORARILY SEEDED IF PILE IS TO REMAIN IN PLACE FOR MORE THAN ONE (1) MONTH.
12. MINIMIZE LAND DISTURBANCES. SEED AND MULCH DISTURBED AREAS WITH TEMPORARY MIX AS SOON AS PRACTICABLE (ONE WEEK MAXIMUM UNSTABILIZED PERIOD) USING PERENNIAL RYEGRASS AT 40 LBS PER ACRE. MULCH ALL CUT AND FILL SLOPES AND SWALES WITH LOOSE HAY AT A RATE OF 2 TONS PER ACRE. IF NECESSARY, REPLACE LOOSE HAY ON SLOPES WITH EROSION CONTROL BLANKETS OR JUTE CLOTH. MODERATELY GRADED AREAS, ISLANDS, AND TEMPORARY CONSTRUCTION STAGING AREAS MAY BE HYDROSEEDED WITH TACKIFIER.
13. MAINTAIN EXISTING PAVED AREAS FOR CONSTRUCTION STAGING FOR AS LONG AS POSSIBLE.
14. SILT FENCE AND OTHER SEDIMENT AND EROSION CONTROL MEASURES SHALL BE INSTALLED IN ACCORDANCE WITH CONTRACT DRAWINGS AND MANUFACTURER'S RECOMMENDATIONS PRIOR TO WORK IN ANY UPLAND AREAS.
15. EXCAVATED MATERIAL FROM TEMPORARY SILT TRAPS MUST BE STOCKPILED ON UPHILL SIDE OF SILT FENCE.
16. INSTALL PERIMETER SILT SOCK ACCORDING TO MANUFACTURER'S INSTRUCTION.
17. WHERE INDICATED ON SEDIMENT AND EROSION CONTROL PLANS USE NEW HAY/STRAW BALES AND REPLACE THEM WHENEVER THEIR CONDITION DETERIORATES BEYOND REASONABLE USABILITY. STAKE BALES SECURELY INTO GROUND AND BUTT TIGHTLY TOGETHER TO PREVENT UNDERCUTTING AND BYPASSING.
18. DIRECT ALL DEWATERING PUMP DISCHARGE TO A SEDIMENT CONTROL DEVICE SUCH AS TEMPORARY PITS OR GRASS FILTERS WITHIN THE APPROVED LIMIT OF DISTURBANCE. DISCHARGE TO STORM DRAINAGE SYSTEM OR SURFACE WATERS FROM SEDIMENT CONTROLS SHALL BE CLEAR.
19. SWEEP AFFECTED PORTIONS OF OFF SITE ROADS ONE OR MORE TIMES A DAY (OR LESS FREQUENTLY IF TRACKING IS NOT A PROBLEM) DURING CONSTRUCTION. OTHER DUST CONTROL MEASURES TO BE USED AS NECESSARY INCLUDE WATERING DOWN DISTURBED AREAS, USING CALCIUM CHLORIDE, AND COVERING LOADS ON DUMP TRUCKS.
20. IMMEDIATELY UPON DISCOVERING UNFORESEEN CIRCUMSTANCES POSING THE POTENTIAL FOR ACCELERATED EROSION AND/OR SEDIMENT POLLUTION, THE OPERATOR SHALL IMPLEMENT APPROPRIATE BEST MANAGEMENT PRACTICES TO ELIMINATE THE POTENTIAL FOR ACCELERATED EROSION AND/OR SEDIMENT POLLUTION.
21. ALL PUMPING OF SEDIMENT LADEN WATER SHALL BE THROUGH A SEDIMENT CONTROL BMP, SUCH AS A PUMPED WATER FILTER BAG OR EQUIVALENT SEDIMENT REMOVAL FACILITY, OVER UNDISTURBED VEGETATED AREAS.
22. ALL EXCAVATED MATERIAL SHALL BE PLACED ON THE HIGH SIDE OF UTILITY AND STORM PIPE TRENCHES SO AS TO ALLOW THE TRENCH TO INTERCEPT ALL SILT LADEN RUNOFF.
23. CONTRACTOR SHALL ONLY EXCAVATE AS MUCH UTILITY AND STORM PIPE TRENCH WORK AS CAN BE COMPLETED, BACKFILLED AND STABILIZED IN ONE DAY SO AS TO LIMIT THE AMOUNT OF OPEN, DISTURBED TRENCHING.
24. ANY STOCKPILES OF STRIPPED MATERIALS ARE TO BE PERIODICALLY SPRAYED WITH WATER OR A CRUSTING AGENT TO STABILIZE POTENTIALLY WIND-BLOWN MATERIAL. HAUL ROADS BOTH INTO AND AROUND THE SITE ARE TO BE SPRAYED AS NEEDED TO SUPPRESS DUST. TRUCKS HAULING IMPORT FILL MATERIAL ARE TO BE TARPED TO AID IN THE CONTROL OF AIRBORNE DUST. DURING HIGH WIND EVENTS (20 TO 30 MPH SUSTAINED) CONSTRUCTION ACTIVITY SHALL BE LIMITED OR CEASED IF DUST CANNOT BE CONTROLLED BY WETTING.
25. AN AREA SHALL BE CONSIDERED TO HAVE ACHIEVED FINAL STABILIZATION WHEN IT HAS A MINIMUM OF 70% UNIFORM PERENNIAL VEGETATIVE COVER OR OTHER PERMANENT NON-VEGETATIVE COVER WITH A DENSITY SUFFICIENT TO RESIST ACCELERATED SURFACE EROSION AND SUBSURFACE CHARACTERISTICS SUFFICIENT TO RESIST SLIDING OR OTHER MOVEMENTS UNLESS OTHERWISE DETERMINED BY THE AUTHORITY HAVING JURISDICTION.
26. MAINTAIN ALL PERMANENT AND TEMPORARY EROSION AND SEDIMENT CONTROL DEVICES IN EFFECTIVE CONDITION THROUGHOUT THE CONSTRUCTION PERIOD. UPON COMPLETION OF WORK SWEEP PARKING LOT AND REMOVE ALL TEMPORARY EROSION AND SEDIMENT CONTROLS WHEN AUTHORIZED BY AUTHORITY HAVING JURISDICTION. FILE NOT (NOTICE OF TERMINATION) WITH AUTHORITY HAVING JURISDICTION RESPONSIBLE FOR REGULATING STORM WATER DISCHARGES FROM CONSTRUCTION ACTIVITIES PER NPDES.

Architecture
Engineering
Environmental
Land Surveying
BL Companies
100 Constitution Plaza
10th Floor
Hartford, CT 06103
(860) 249-2200

SUZANNE M. KING
No. 10040
REGISTERED PROFESSIONAL ENGINEER
CIVIL

PROPOSED PASSENGER FACILITIES BUILDING
300 PINE STREET, PAWTUCKET
PROVIDENCE COUNTY, RHODE ISLAND

REVISIONS
No. Date Desc.

Designed	R.M.D.
Drawn	R.M.D.
Reviewed	T.A.H.
Scale	N.T.S.
Project No.	2301115
Date	04/09/2024
CAD File: EC230111501	

Title
EROSION AND SEDIMENTATION CONTROL NOTES

Sheet No.
EC-2

Xref (s): : BD230111501 ; XC230111501 ; XC230111502 ; XC230111505 ; XF230111501

© 2024 BL COMPANIES, INC. THESE DRAWINGS SHALL NOT BE UTILIZED BY ANY PERSON, FIRM OR CORPORATION WITHOUT THE SPECIFIC WRITTEN PERMISSION OF BL COMPANIES.

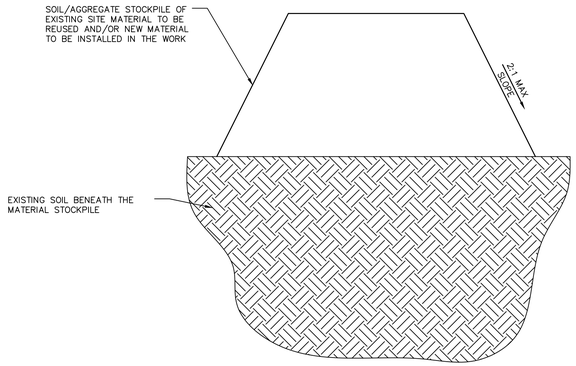

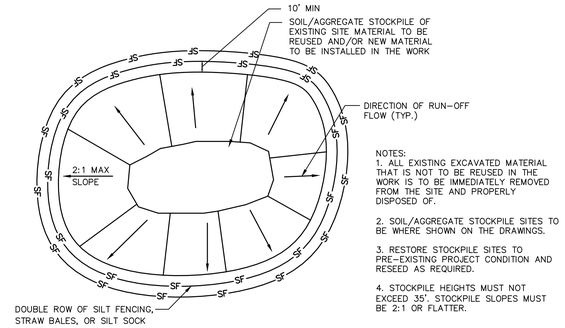

NOTES:
1. ALL EXISTING EXCAVATED MATERIAL THAT IS NOT TO BE REUSED IN THE WORK IS TO BE IMMEDIATELY REMOVED FROM THE SITE AND PROPERLY DISPOSED OF.
2. SOIL/AGGREGATE STOCKPILE SITES TO BE WHERE SHOWN ON THE DRAWINGS.
3. RESTORE STOCKPILE SITES TO PRE-EXISTING PROJECT CONDITION AND RESEED AS REQUIRED.
4. STOCKPILE HEIGHTS MUST NOT EXCEED 35'. STOCKPILE SLOPES MUST BE 2:1 OR FLATTER.

MATERIALS STOCKPILE DETAIL

N.T.S.

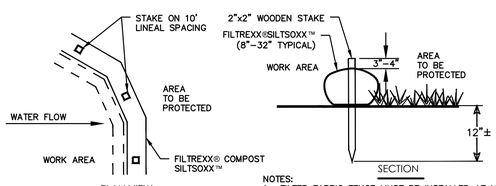

SILT SOXX REPLACEMENT GUIDE	
SILT SOXX DIAMETER	EQUIVALENT STANDARD FILTER FABRIC FENCE
8"	18" SILT FENCE
12"	30" SILT FENCE
18"	30" SILT FENCE
24"	SUPER SILT FENCE

NOTES:
1. FILTER FABRIC FENCE MUST BE INSTALLED AT LEVEL GRADE. BOTH ENDS OF EACH FENCE SECTION MUST EXTEND AT LEAST 8' UPSLOPE AT 45 DEGREES TO THE MAIN FENCE ALIGNMENT.
2. SEDIMENT MUST BE REMOVED WHEN ACCUMULATIONS REACH 1/2 THE ABOVE GROUND HEIGHT OF THE FENCE.
3. ANY FENCE SECTION, WHICH HAS BEEN UNDERMINED OR TOPPED, MUST BE IMMEDIATELY REPLACED WITH A ROCK FILTER OUTLET. (SEE ROCK FILTER OUTLET DETAIL)
4. COMPOST MATERIAL TO BE DISPERSED ON SITE, AS DETERMINED BY ENGINEER
5. ALL MATERIAL TO MEET FILTREXX® SPECIFICATIONS
6. SILTSOXX™ COMPOST/SOIL/ROCK/SEED FILL TO MEET APPLICATION REQUIREMENTS

SILTSOXX™ DEPICTED FOR MINIMUM SLOPES. IN CASE OF SILT SOXX FAILURE, USE THE TABLE ABOVE TO DETERMINE APPROVED REPLACEMENT BMP. GREATER SLOPES MAY REQUIRE LARGER SOCKS PER THE ENGINEER. ALTERNATE APPROVED EQUAL COMPOST SOCKS MAY BE USED. CONTRACTOR TO SUBMIT SHOP DRAWINGS AND SUPPORTING DOCUMENTATION FOR REVIEW AND APPROVAL BY ENGINEER AND CONSERVATION DISTRICT

SILT SOCK DETAIL (FILTREXX SILTSOXX)

N.T.S

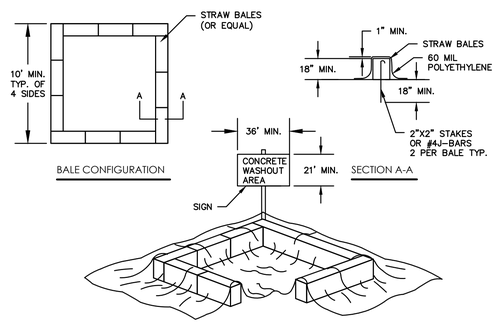

CONCRETE WASHOUT DETAIL

N.T.S

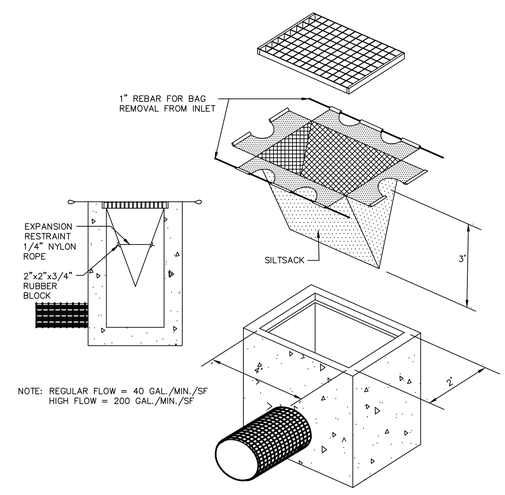

NOTE: REGULAR FLOW = 40 GAL./MIN./SF
HIGH FLOW = 200 GAL./MIN./SF

SILTSACK DETAIL

N.T.S.

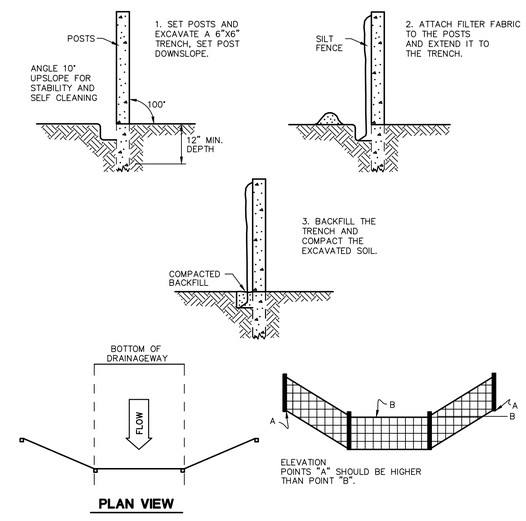

SILT FENCE BARRIER

N.T.S.

Architecture
Engineering
Environmental
Land Surveying
BL Companies
100 Constitution Plaza
10th Floor
Hartford, CT 06103
(860) 249-2200

SUZANNE M. KING
No. 10040
REGISTERED PROFESSIONAL ENGINEER CIVIL

PROPOSED PASSENGER FACILITIES BUILDING

300 PINE STREET, PAWTUCKET
PROVIDENCE COUNTY, RHODE ISLAND

REVISIONS

No.	Date	Desc.

Designed	R.M.D.
Drawn	R.M.D.
Reviewed	T.A.H.
Scale	N.T.S.
Project No.	2301115
Date	04/09/2024
CAD File: EC230111501	

Title

EROSION AND SEDIMENTATION CONTROL DETAILS

Sheet No.

EC-3

Xref (s) : BD230111501 ; XC230111501 ; XC230111502 ; XC230111505 ; XY230111501

4/12/2024, BDONAHUE, G:\JOBS\2\1\2301115\DWG\EC230111501.DWG\EC-3.DWG%,

© 2024 BL COMPANIES, INC. THESE DRAWINGS SHALL NOT BE UTILIZED BY ANY PERSON, FIRM OR CORPORATION WITHOUT THE SPECIFIC WRITTEN PERMISSION OF BL COMPANIES.

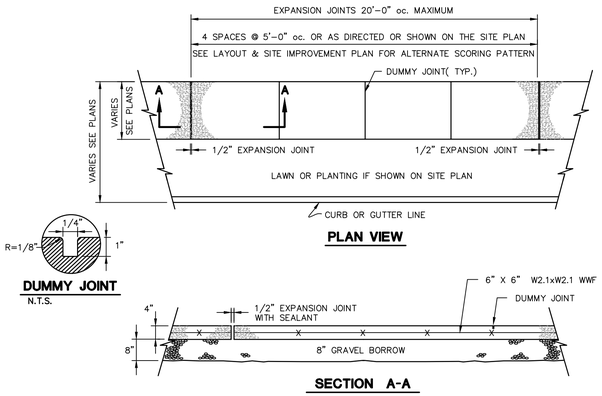

CONCRETE SIDEWALK DETAIL

N.T.S.

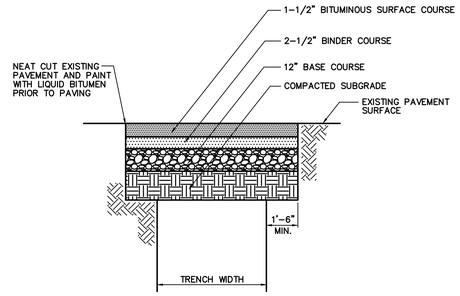

PAVEMENT REPAIR OVER TRENCH

N.T.S.

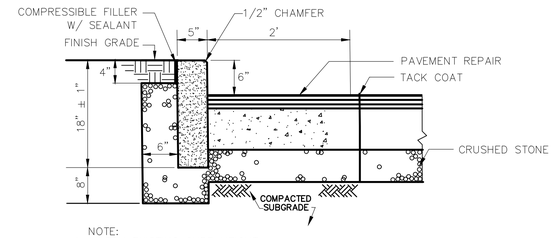

NOTE:
1. MATCH EXISTING CURB HEIGHT.
2. CROSS SLOPE OF PAVEMENT TO MATCH EXISTING PAVEMENT.

STRAIGHT GRANITE CURB

N.T.S.

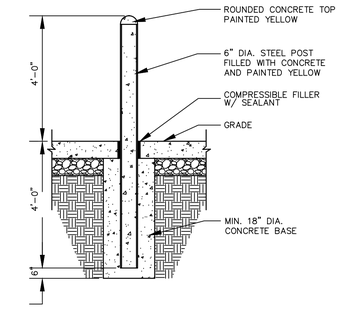

6" CONCRETE FILLED STEEL BOLLARD

N.T.S.

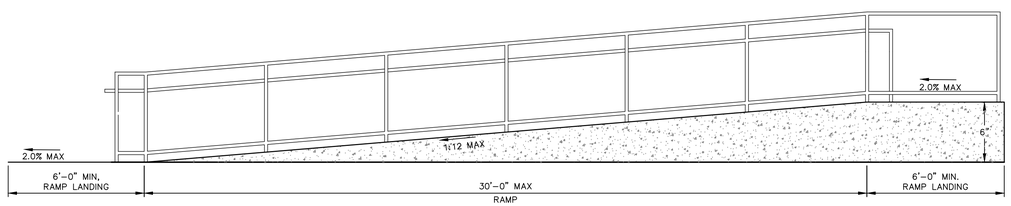

CONCRETE RAMP ELEVATION

N.T.S.

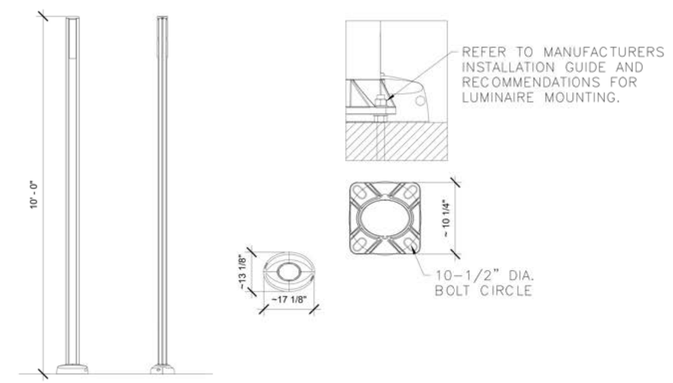

COLUMN LUMINAIRE

N.T.S.

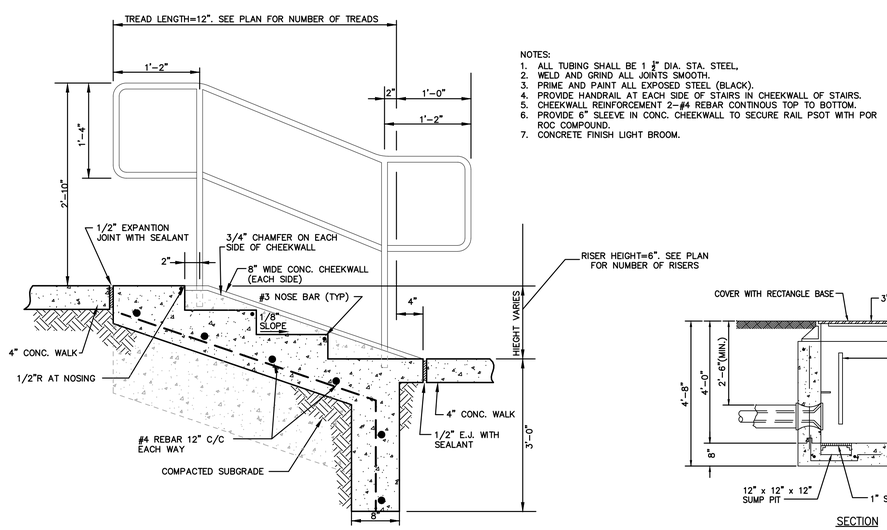

NOTES:
1. ALL TUBING SHALL BE 1 ½" DIA. STA. STEEL.
2. WELD AND GRIND ALL JOINTS SMOOTH.
3. PRIME AND PAINT ALL EXPOSED STEEL (BLACK).
4. PROVIDE HANDRAIL AT EACH SIDE OF STAIRS IN CHEEKWALL OF STAIRS.
5. CHEEKWALL REINFORCEMENT 2-#4 REBAR CONTINOUS TOP TO BOTTOM.
6. PROVIDE 6" SLEEVE IN CONC. CHEEKWALL TO SECURE RAIL PSOT WITH POR ROC COMPOUND.
7. CONCRETE FINISH LIGHT BROOM.

STAIR DETAIL

N.T.S

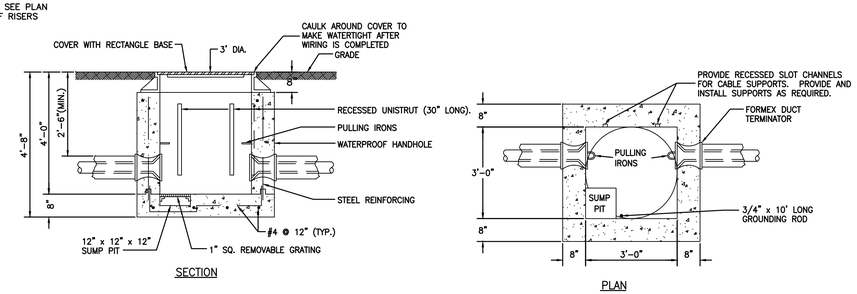

ELECTRICAL HANDHOLE DETAIL

N.T.S.

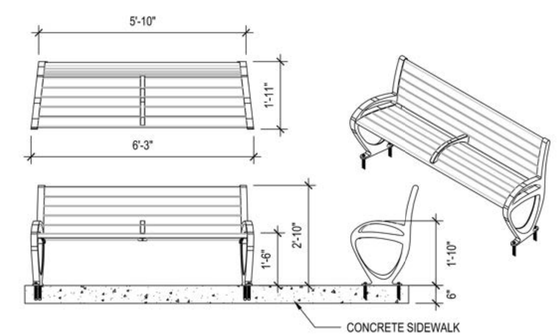

BENCH DETAIL

N.T.S.

Architecture
Engineering
Environmental
Land Surveying
BL Companies
100 Constitution Plaza
10th Floor
Hartford, CT 06103
(860) 249-2200

SUZANNE M. KING
No. 10040
REGISTERED PROFESSIONAL ENGINEER
CIVIL

PROPOSED PASSENGER FACILITIES BUILDING

300 PINE STREET, PAWTUCKET
PROVIDENCE COUNTY, RHODE ISLAND

REVISIONS

No.	Date	Desc.

Designed	R.M.D.
Drawn	R.M.D.
Reviewed	T.A.H.
Scale	N.T.S.
Project No.	2301115
Date	04/09/2024
CAD File: DN2301115.01	

Title
DETAILS SHEET

Sheet No.
DN-1

Xref (s) : B0230111501

© 2024 BL COMPANIES, INC. THESE DRAWINGS SHALL NOT BE UTILIZED BY ANY PERSON, FIRM OR CORPORATION WITHOUT THE SPECIFIC WRITTEN PERMISSION OF BL COMPANIES.

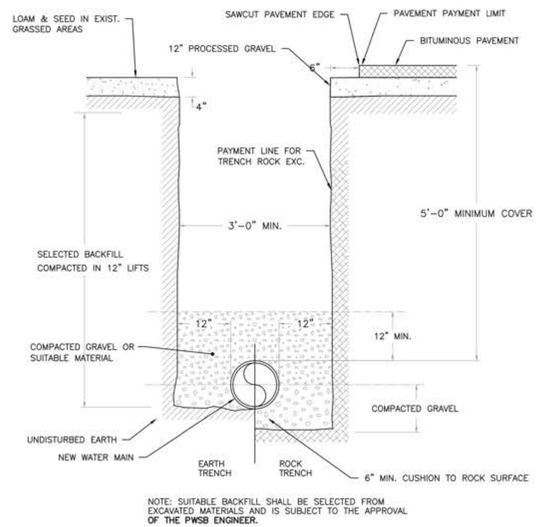

PAWTUCKET WATER SUPPLY BOARD TYPICAL TRENCH DETAIL

N.T.S.

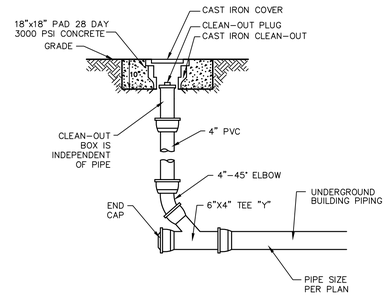

SANITARY CLEANOUT DETAIL

N.T.S.

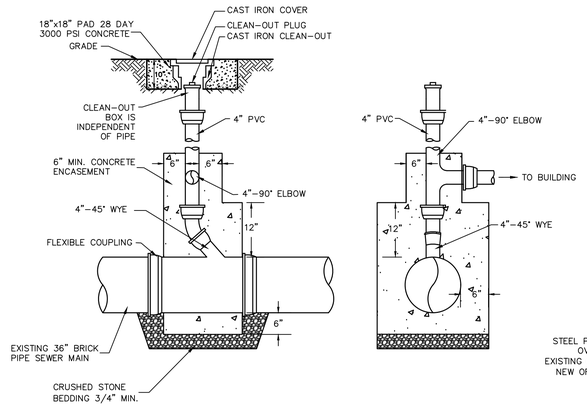

SEWER CHIMNEY CONNECTION

N.T.S.

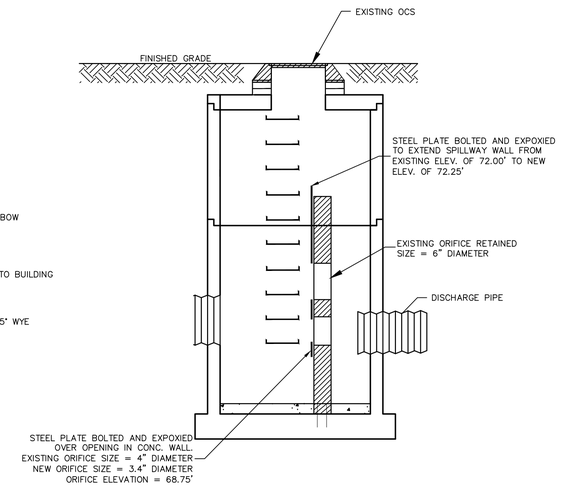

DETENTION SYSTEM OUTFLOW STRUCTURE REVISION

N.T.S.

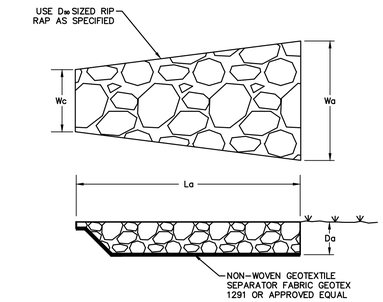

RIP RAP SECTION DESIGNATION	La (FT)	Wa (FT)	Wc (FT)	Da (IN)	D50 (IN)
SECTION 1	2.0	3.0	1.5	17.50	5.00

RIP RAP END SECTION

N.T.S

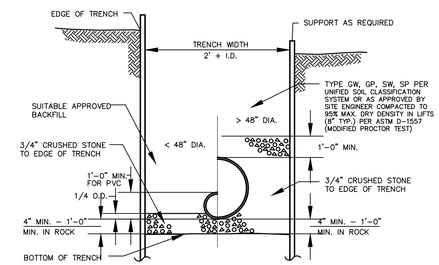

TYPICAL STORM SEWER TRENCH SECTION

N.T.S.

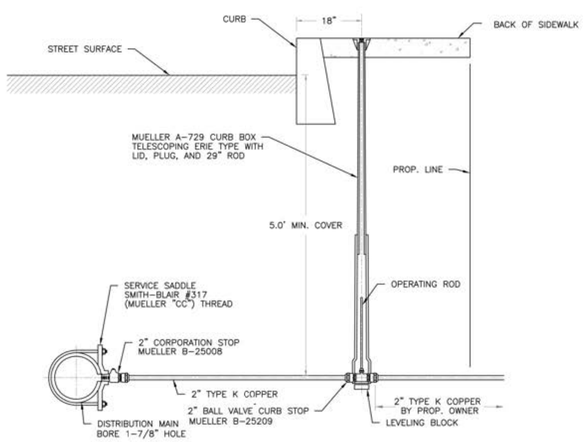

PAWTUCKET WATER SUPPLY BOARD NEW 2" SERVICE INSTALLATION DETAIL

N.T.S.

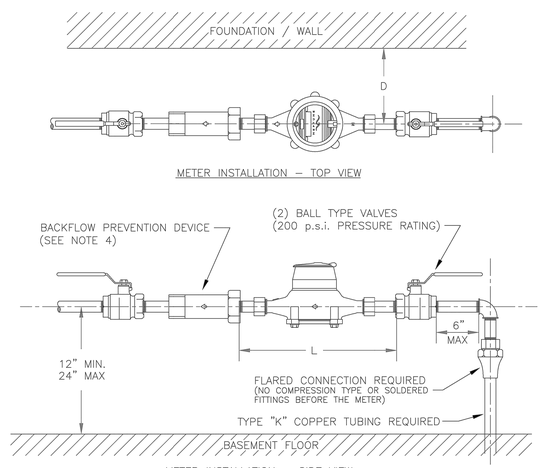

METER SIZE	L	D
5/8"	12½"	12"
3/4"	14¼"	12"
1"	16¼"	12"
1½" (FLANGED END)	13"	18"
2" (FLANGED END)	17"	18"

NOTES:
1. THE METER SHALL BE LOCATED AS NEAR AS POSSIBLE TO THE POINT AT WHICH THE SERVICE ENTERS THE BUILDING.
2. THE METER SHALL BE INSTALLED HORIZONTALLY.
3. METERS INSTALLED INSIDE BUILDINGS SHALL NOT BE INSTALLED IN PITS.
4. INDIVIDUAL RESIDENCES (RESTRICTED TO 3-UNIT RESIDENCES OR LESS) REQUIRE A RESIDENTIAL DUAL CHECK VALVE; ALL OTHER WATER SERVICES REQUIRE A PWSB APPROVED TESTABLE BACKFLOW PREVENTION DEVICE IN ACCORDANCE WITH SECTION 10 OF THE PWSB RULES & REGULATIONS. ALL MODELS OF BACKFLOW PREVENTION DEVICES ARE REQUIRED TO BE LEAD FREE.

PAWTUCKET WATER SUPPLY BOARD TYPICAL METER INSTALLATION DETAIL

N.T.S.

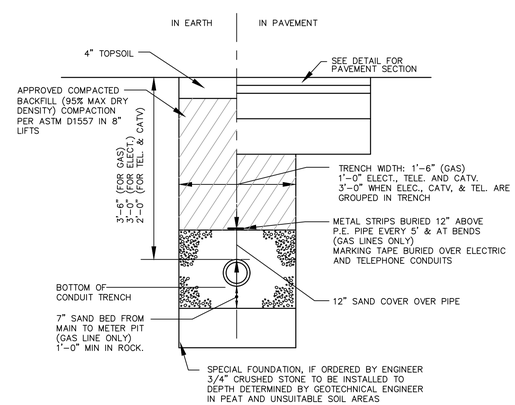

ELECTRICAL, TELEPHONE AND GAS TRENCH DETAIL

N.T.S.

NOTES:
1. STANDARD GRATE HAS A LIGHT DUTY RATING.
2. MATERIALS SHALL CONFORM TO ASTM A536 GRADE 70-50-05.
3. MATERIAL SHALL BE DUCTILE IRON.
4. CASTINGS SHALL BE FURNISHED WITH A BLACK PAINT.

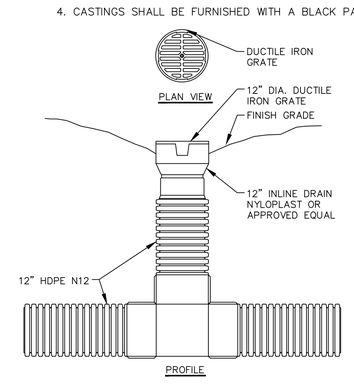

YARD DRAIN DETAIL

SCALE: N.T.S

Architecture
Engineering
Environmental
Land Surveying
BL Companies
100 Constitution Plaza
10th Floor
Hartford, CT 06103
(860) 249-2200

SUZANNE M. KING
No. 10040
REGISTERED PROFESSIONAL ENGINEER CIVIL

PROPOSED PASSENGER FACILITIES BUILDING
300 PINE STREET, PAWTUCKET
PROVIDENCE COUNTY, RHODE ISLAND

No.	Date	Desc.
REVISIONS		

Designed	R.M.D.
Drawn	R.M.D.
Reviewed	S.M.K.
Scale	1"=20'
Project No.	2301115
Date	04/09/2024
CAD File: DN230111501	

Title
DETAILS SHEET

Sheet No.
DN-2

Xref (s): BD230111501

© 2024 BL COMPANIES, INC. THESE DRAWINGS SHALL NOT BE UTILIZED BY ANY PERSON, FIRM OR CORPORATION WITHOUT THE SPECIFIC WRITTEN PERMISSION OF BL COMPANIES.

ABBREVIATIONS:

AASHTO	AMERICAN ASSOCIATION OF STATE HIGHWAY TRANSPORTATION OFFICIALS
A.B.	ANCHOR BOLT OR ANCHOR ROD
A.A.S.	ADHESIVE ANCHORING INSTITUTE
ACI	AMERICAN CONCRETE INSTITUTE
AESS	ARCHITECTURALLY EXPOSED STRUCTURAL STEEL
AFPA	AMERICAN FOREST AND PAPER ASSOCIATION
AISC	AMERICAN INSTITUTE OF STEEL CONSTRUCTION
ALT.	ALTERNATE
ALUM	ALUMINUM
ANCH.	ANCHOR OR ANCHORAGE
ARCH.	ARCHITECTURAL OR ARCHITECT
ASD	ALLOWABLE STRESS DESIGN
ASTM	AMERICAN SOCIETY FOR TESTING AND MATERIALS
AWS	AMERICAN WELDING SOCIETY
B, BOTT.	BOTTOM
B/, B.O.	BOTTOM OF
BLDG.	BUILDING
BM.	BEAM
B.O.F.	BOTTOM OF FOOTING
B.O.S.	BOTTOM OF STEEL
BRG.	BEARING
B/S	BOTH SIDES
CF	COLD-FORMED
CFMF	COLD-FORMED METAL FRAMING
C.G.	CENTER OF GRAVITY
C.I.P.	CAST IN PLACE
C.J.	CONTROL JOINT
CLR.	CLEAR
CMU	CONCRETE MASONRY UNIT
C.O.	CLEAN OUT
COL.	COLUMN
CONC.	CONCRETE
CONN.	CONNECTION
CONST.	CONSTRUCTION
CONST. JT.	CONSTRUCTION JOINT
CONT.	CONTINUOUS
CRSI	CONCRETE REINFORCING STEEL INSTITUTE
CTR.	CENTER
CWA	COORDINATE WITH ARCHITECTURAL DRAWINGS
D-B	DESIGN BUILD
DEPR.	DEPRESSION
DEPT.	DEPARTMENT
DET.	DETAIL
DIA.	DIAMETER
DIM.	DIMENSION
DIR.	DIRECTION
DN	DOWN
D.O.	DITTO (SAME AS ABOVE)
D.O.T.	DEPARTMENT OF TRANSPORTATION
DWG.	DRAWING
DWL.	DOWEL(S)
EA.	EACH
E.E.	EACH END
E.F.	EACH FACE
EL., ELEV.	ELEVATION
ELEC.	ELECTRICAL
EMBED.	EMBEDMENT
ENGR.	ENGINEER
E.O.D.	EDGE OF DECK
E.O.S.	EDGE OF STEEL
EQ.	EQUAL
E.W.	EACH WAY
EX., EXIST.	EXISTING
EXP.	EXPANSION
EXP. JT., E.J.	EXPANSION JOINT
EXT.	EXTENSION
F.D.	FLOOR DRAIN
F.F.	FAR FACE
FND.	FOUNDATION
FIN.	FINISH
FL.	FLOOR
FLG.	FLANGE
F.M.	FACTORY MUTUAL
F.S.	FAR SIDE
FT.	FEET OR FOOT
FTG.	FOOTING
F.O.W.	FACE OF WALL
GA.	GAUGE
G.B.	GRADE BEAM
GALV.	GALVANIZED
G.C.	GENERAL CONTRACTOR
GEN., GENL	GENERAL
GR.	GRADE
HDR.	HEADER
HOR., HORIZ.	HORIZONTAL
H.P.	HIGH POINT
H.S.	HIGH STENGTH
HSS	HOLLOW STRUCTURAL SECTION
HT.	HEIGHT
ICC	INTERNATIONCODE COUNCIL
I.D.	INSIDE DIAMETER
I.F.	INSIDE FACE
IN.	INCH OR INCHES
INCL.	INCLUDING
INFO	INFORMATION
INT.	INTERIOR
INV.	INVERT
JST.	JOIST
JT.	JOINT
K	KIP (1000 LBS.)
KLF	KIPS PER LINEAR FOOT
KSF	KIPS PER SQUARE FOOT
KSI	KIPS PER SQUARE INCH
L.B.	ANGLE BRACE (ALSO SEE SYMBOLS)
LLH	LONG LEG HORIZONTAL
LLV	LONG LEG VERTICAL
LOC.	LOCATION
L.P.	LOW POINT
L.W.	LIGHT WEIGHT
MAS.	MASONRY
MATL.	MATERIAL
MAX.	MAXIMUM
MECH.	MECHANICAL
M/E/P	MECHANICAL/ELECTRICAL/PLUMBING
MEZZ.	MEZZANINE
MID.	MIDDLE
MID-PT	MIDPOINT
MIN.	MINIMUM
MM	MILLIMETER
M.O.	MASONRY OPENING
MTL	METAL
N.F.	NEAR FACE
NFPA	NATIONAL FIRE PROTECTION ASSOCIATION
N.I.C.	NOT IN CONTRACT
NO.	NUMBER
N.S.	NEAR SIDE
N.T.S.	NOT TO SCALE
N.W.	NORMAL WEIGHT
O.C.	ON CENTER
O.D.	OUTSIDE DIAMETER
O.F.	OUTSIDE FACE
O.H.	OPPOSITE HAND
O/H	OVERHANG
OPNG.	OPENING
OPP.	OPPOSITE
P.A.F.	POWER-ACTUATED FASTENER
PART.	PARTIAL
PL.	PLATE
PCA	PORTLAND CEMENT ASSOCIATION
PCI	PRE-STRESSED CONCRETE INSTITUTE
P/C	PRECAST CONCRETE
PEN.	PENETRATION
PLF, #/FT	POUNDS PER SQUARE FOOT
PREFAB.	PREFABRICATED
PSF	POUNDS PER SQUARE FOOT
PSI	POINDS PER SQUARE INCH
PSL	PARALLEL STRAND LUMBER
PT.	POINT
P/T	PRESERVATIVE TREATED
PTD.	PAINTED
PVC	POLYVINYL CHLORIDE
R	RADIUS
R/C	REINFORCED CONCRETE
R.C.P.	REINFORCED CONCRETE PIPE
R.D.	ROOF DRAIN
REF.	REFERENCE
REINF.	REINFORCING
REQ'D	REQUIRED
RET.	RETURN
R.F.	ROOF FRAME
RFT.	RAFTER
R.O.	ROUGH OPENING
RTU	ROOF TOP UNIT
SDI	STEEL DECK INSTITUTE
SECT.	SECTION
S.F.	STEP FOOTING
SHTG.	SHEATHING
SIM.	SIMILAR
SJI	STEEL JOIST INSTITUTE
SL.	SLOPING BEAM OR GIRDER
S.O.G.	SLAB ON GRADE
SPA.	SPACES
SQ.	SQUARE
S.S.	STAINLESS STEEL
STD.	STANDARD
STL.	STEEL
STIFF.	STIFFENER
T/, T.O.	TOP OF
T&B	TOP AND BOTTOM
TEMP.	TEMPORARY
THK.	THICK OR THICKNESS
THRD.	THREADED
THRU	THROUGH
T.O.C.	TOP OF CONCRETE
T.O.S.	TOP OF STEEL
T.O.W.	TOP OF WALL
TS	TUBE STEEL
TSF	TONS PER SQUARE FOOT
TYP.	TYPICAL
UL	UNDERWRITER'S LABORATORIES
U.O.N.	UNLESS OTHERWISE NOTED
VERT.	VERTICAL
V.I.F.	VERIFY IN FIELD
w/	WITH
W.O.	WINDOW OPENING
W.P.	WORKING POINT
W.W.F.	WELDED WIRE FABRIC

GENERAL NOTES:

DESIGNED IN ACCORDANCE WITH THE RHODE ISLAND STATE STATE BUILDING CODE, 2018 IBC, WITH STATE AMENDMENTS.

IF ANY FIELD CONDITIONS PRECLUDE COMPLIANCE WITH THESE DRAWINGS AND/OR CONDITIONS SPECIFIED, THE CONTRACTOR SHALL IMMEDIATELY NOTIFY THE ENGINEER AND SHALL NOT PROCEED WITH THE AFFECTED WORK.

TYPICAL DETAILS AND NOTES SHOWN HEREIN SHALL APPLY UNLESS SPECIFICALLY SHOWN OR NOTED OTHERWISE. CONSTRUCTION DETAILS NOT FULLY SHOWN OR NOTED SHALL BE SIMILAR TO DETAILS SHOWN FOR SIMILAR CONDITIONS.

WORK AREAS SHALL BE MARKED, FENCED, AND OTHERWISE SECURED SO AS TO PROVIDE PROPER PROTECTION FOR THE PUBLIC, AND AS REQUIRED BY THE BUILDING INSPECTOR.

IT SHALL BE THE CONTRACTORS SOLE RESPONSIBILITY TO DESIGN AND PROVIDE ADEQUATE SHORING, BRACING AND FORMWORK, ETC., AS REQUIRED FOR THE PROTECTION OF LIFE AND PROPERTY DURING CONSTRUCTION. THIS INCLUDES PROVIDING TEMPORARY BRACING, SHORING, GUYS OR TIE-DOWNS. THESE TEMPORARY SUPPORTS SHALL REMAIN IN PLACE UNTIL ALL STRUCTURAL COMPONENTS ARE STABLE AND COMPLETED.

**DEAD LOADS:

ROOF MEMBRANE & INSULATION	4.5 PSF
METAL DECK	4.3 PSF
MECHANICAL	4.0 PSF
SPRINKLER BRANCH LINES	3.0 PSF (SCH 10, 4" DIA., 4'-0" JOIST SPACING OR GREATER)
LIGHTS AND CEILING	2.0 PSF
JOIST SELF WEIGHT	3.0 PSF
TOTAL	20.8 PSF

SPRINKLER MAIN LINES NOT INCLUDED ABOVE. JOIST MANUFACTURER TO COORDINATE LOCATION AND QUANTITY OF SPRINKLER MAINS.

ROOF LIVE LOADS:
LIVE LOAD = 20 PSF (MIN.)
GROUND SNOW LOAD, Pg = 35 PSF (TABLE 1608.1)
EXPOSURE FACTOR, Ce = 1.0
THERMAL FACTOR, Ct = 1.0
IMPORTANCE FACTOR, Is = 1.0
CALCULATED FLAT ROOF SNOW LOAD, Pf = 24.5 PSF
DESIGN SNOW LOAD, Pf = 30.0 PSF (PER RI 1608.1 MINIMUM)
SNOW LOADS INCREASED FOR DRIFT, SLIDING, ETC. WHERE APPLICABLE.

WIND LOADS:
RISK CATEGORY II
ULTIMATE DESIGN WIND SPEED (3-SECOND GUST) = 125 MPH (TABLE 1608.1)
IMPORTANCE FACTOR, Iw = 1.0
EXPOSURE = "C"
TOPGRAPHICAL FACTOR, Kzt = 1.0
COMPONENT AND CLADDING ITEMS NOT DESIGNED BY THE ENGINEER OF RECORD: REFER TO COMPONENTS AND CLADDING WIND PRESSURE TABLES

SEISMIC DESIGN CRITERIA:
Ss = 0.178 S1 = 0.062
SEISMIC IMPORTANCE FACTOR, Ie = 1.0
SITE CLASS = "D"
Sds = 0.190 Sd1 = 0.099
SEISMIC DESIGN CATEGORY = "B"
BUILDING FRAME SYSTEMS -
STEEL SYSTEMS NOT SPECIFICALLY DETAILED FOR SEISMIC RESISTANCE
(R = 3, Cd = 3)
SEISMIC RESPONSE COEFFICIENT, Cs
DESIGN BASE SHEAR, V = Cs x W
ANALYSIS PROCEDURE = ELFP

ALL SPECIAL INSPECTION REPORTS PERFORMED IN ACCORDANCE WITH THE STATEMENT OF SPECIAL INSPECTIONS SHALL BE SUBMITTED TO THE ENGINEER FOR REVIEW IN A TIMELY MANNER. THE FINAL REPORT OF SPECIAL INSPECTIONS SHALL NOT BE ISSUED UNTIL ALL SPECIAL INSPECTION REPORTS HAVE BEEN RECEIVED AND APPROVED BY THE ENGINEER.

GEOTECHNICAL NOTES:

ALL UNDERGROUND UTILITY LOCATIONS SHALL BE VERIFIED PRIOR TO STARTING EXCAVATION WORK. CALL BEFORE YOU DIG PRIOR TO STARTING ANY EXCAVATION.

THE CONTRACTOR WILL PERFORM EXCAVATIONS, FOOTING CONSTRUCTION, AND PREPARATION OF THE SUBGRADE UNDER THE SLAB ON GRADE IN ACCORDANCE WITH THE RECOMMENDATIONS CONTAINED IN THE GEOTECHNICAL REPORT AND THE PROJECT SPECIFICATIONS.

ALL FOOTINGS HAVE BEEN DESIGNED FOR AN ALLOWABLE NET SOIL BEARING PRESSURE OF 3,000 PSF PER FIGURE 6 OF APPENDIX A WITHIN THE GEOTECHNICAL ENGINEERING REPORT DATED 6/12/2020 BY MICHAEL BAKER INTERNATIONAL. NO FOOTINGS SHALL BEAR ON LOAM OR SOIL FILL. IF UNSUITABLE SOIL IS ENCOUNTERED OR CONDITIONS DIFFER FROM THOSE DESCRIBED IN THE GEOTECH REPORT, THE CONTRACTOR SHALL IMMEDIATELY NOTIFY THE ENGINEER, AND NOT PROCEED WITH THE AFFECTED WORK. IF ROCK IS ENCOUNTERED PRIOR TO THE PROPOSED BOTTOM OF FOOTING ELEVATION, THE ROCK SHALL BE OVEREXCAVATED BY 1'-0", AND BACKFILLED WITH 3/4" CRUSHED STONE TO THE BOTTOM OF FOOTING, AND COVERED WITH FILTER FABRIC.

THE BOTTOM OF ALL EXTERIOR FOOTING ELEVATIONS SHALL BE AT LEAST 4'-0" BELOW FINISHED GRADE, UNLESS NOTED OTHERWISE. FOOTINGS SHALL BEAR ON 12" OF RIDOT M.01.09 GRAVEL BORROW, KEYSTONE, OR COVER STONE ON UNDISTURBED NATURAL SILTY GLACIAL TILL. REMOVE ALL DEBRIS AND URBAN FILL FROM BOTTOM OF FOOTING PRIOR TO PLACING CONCRETE. ALL OVERECAVATION SHALL BE REPLACED WITH COMPACTED GRANULAR FILL. DO NOT PLACE CONCRETE ON FROZEN SOIL, ICE, MUD, OR IN WATER. ALL FOUNDATION SUBGRADES SHALL BE INSPECTED AND APPROVED UNDER THE SUPERVISION OF A REGISTERED PROFESSIONAL ENGINEER PRIOR TO BEING CONCRETED.

ALL COMPACTED CONTROLLED FILL BEING PLACED MUST BE TESTED BY AN APPROVED TESTING LABORATORY DURING THE FILL OPERATION. SLABS AND FOOTINGS SHALL NOT BE PLACED UNTIL FILL TEST REPORTS HAVE BEEN CHECKED AND APPROVED BY THE ENGINEER. PROIR TO PLACING CONCRETE, EXISTING SOIL CONDITIONS SHALL BE INSPECTED AND VERIFIED BY THE ENGINEER. ALL UNSUITABLE SOIL SHALL BE REMEDIATED AS DIRECTED BY THE ENGINEER. BUILDING PAD PREPARATION SHALL BE IN ACCORDANCE WITH THE SITE DRAWINGS AND SPECIFICATIONS. CONTROLLED FILL, EITHER STRUCTURAL FILL OR SLAB BASE SHALL BE INERT, GRANULAR FILL, FREE FROM ORGANICS AND DEBRIS. SEE GEOTECHNICAL REPORT FOR STRUCTURAL FILL AND SLAB BASE REQUIREMENTS. ALL CONTROLLED FILL PLACED SHALL BE COMPACTED TO A MINIMUM OF 95% OF MAXIMUM DRY UNIT WEIGHT AS DETERMINED BY THE MODIFIED PROCTOR TEST, ASTM D1557. SEE GEOTECHINAL REPORT FOR COMPACTION REQUIREMENTS.

CONCRETE NOTES:

ALL CONCRETE WORK SHALL CONFORM TO ACI "BUILDING CODE REQUIREMENTS FOR REINFORCED CONCRETE", ACI-318 - LATEST EDITION, AND "MANUAL OF STANDARD PRACTICE FOR DETAILING REINFORCED CONCRETE STRUCTURES", ACI-315 - LATEST EDITION.

ALL CONCRETE FORMWORK SHALL CONFORM WITH ACI "RECOMMENDED PRACTICES FOR CONCRETE FORMWORK", ACI-347.

ALL STRUCTURAL CONCRETE SHALL CONFORM WITH ACI "SPECIFICATIONS FOR STRUCTURAL CONCRETE BUILDINGS", ACI-301.

AIR ENTRAIN ALL EXTERIOR CONCRETE AND CONCRETE EXPOSED TO WEATHER..

ALL CONCRETE FOR FOOTINGS AND FOUNDATIONS SHALL BE NORMAL WEIGHT CONCRETE WITH A MINIMUM COMPRESSIVE STRENGTH AT 28 DAYS OF 4,000 PSI.

ALL CONCRETE FOR INTERIOR SLABS-ON-GRADE SHALL BE NORMAL WEIGHT CONCRETE WITH A MINIMUM COMPRESSIVE STRENGTH AT 28 DAYS OF 4,000 PSI, (NO AIR-ENTRAINING).

ALL CONCRETE FOR INTERIOR SLABS ON METAL DECK SHALL BE LIGHTWEIGHT CONCRETE WITH A MINIMUM COMPRESSIVE STRENGTH AT 28 DAYS OF 3,000 PSI, (NO AIR-ENTRAINING).

ALL CONCRETE SHALL BE CONTINUOUSLY MOIST CURED FOR SEVEN (7) DAYS MINIMUM. CONCRETE SHALL BE KEPT MOIST BY FOG SPRAYING, CURING PAPER AND/OR ACCEPTABLE CURING COMPOUNDS.

CONTRACTOR SHALL SUBMIT MIX DESIGNS FOR APPROVAL. MIX DESIGN SHALL INDICATE 28-DAY STRENGTHS, CEMENT CONTENT, AIR CONTENT, WATER-CEMENT RATIO, AMOUNT OF FINE AND COARSE AGGREGATES, AND ADMIXTURES.
MAX. WATER-CEMENT RATIO = 0.45 FOR SLABS
0.53 FOR FOOTINGS AND FOUNDATIONS
MAX. SLUMP-
4" FOR SLABS
5" FOR ALL OTHER CONCRETE
MAX. AGGREGATE SIZE-
FOOTINGS & FOUNDATIONS - 3/4" TO 1 1/2"
SLAB-ON-GRADE - 3/4" TO 1"

CEMENT SHALL BE PORTLAND CEMENT, TYPE I OR II, CONFORMING TO ASTM C-150. AGGREGATES SHALL CONFORM TO ASTM C-33. AIR ENTRAINING ADMIXTURES SHALL CONFORM TO ASTM C-260. NON-SHRINK GROUT SHALL CONFORM TO ASTM C-109. EXPANSION JOINTS SHALL BE 1/2" THICK ASPHALT IMPREGNATED FIBERBOARD JOINT MATERIAL, CONFORMING TO ASTM D-1751. CURING COMPOUND SHALL BE CLEAR, CONFORMING TO ASTM C-309.

COLD WEATHER CONCRETE WORK SHALL CONFORM TO ACI-306.

HOT WEATHER CONCRETE WORK SHALL CONFORM TO ACI-305.

ALL REINFORCING STEEL SHALL CONFORM TO ASTM A615 GRADE 60. WELDED WIRE MESH SHALL CONFORM TO ASTM A185 AND ASTM A82.

WELDED WIRE MESH SHALL HAVE MINIMUM END AND SIDE LAPS OF 1'-0".

CONCRETE ACCESSORIES SHALL BE ADEQUATE TO MAINTAIN REINFORCING ACCURATELY IN PLACE AND BE NON-CORROSIVE, NON-STAINING TYPE.

LAP ALL BAR REINFORCING PER ACI-318. STAGGER SPLICES IN WALLS AND SLABS AND ALL HORIZONTAL REINFORCEMENT.

CONCRETE SHALL NOT BE DROPPED THROUGH REINFORCING STEEL (AS IN WALLS AND COLUMNS) SO AS TO CAUSE SEGREGATION OF AGGREGATES. USE HOPPERS, CHUTES OR TRUNKS OF VARYING LENGTHS SO THAT THE FREE UNCONFINED FALL OF CONCRETE SHALL NOT EXCEED FIVE (5) FEET.
MINIMUM REINFORCEMENT COVER, UNLESS NOTED OTHERWISE:
-CONCRETE CAST AGAINST EARTH: 3"
-CONCRETE EXPOSED TO EARTH OR WEATHER:
No. 6 TO No. 18 BARS - 2"
No. 5 AND SMALLER - 1 1/2"
-CONCRETE NOT EXPOSED TO EARTH OR WEATHER:
No. 11 AND SMALLER - 3/4"

ALL CONCRETE WORK, REINFORCING PLACEMENT, AND FORMWORK SHALL BE INSPECTED BY AN INDEPENDENT TESTING AGENCY RETAINED BY THE OWNER FOR THE FOLLOWING ITEMS:
- INSPECT BOTTOM OF FOOTING SOIL CONDITIONS.
- INSPECT FORMWORK AND PLACEMENT OF CONCRETE.
- SAMPLING FRESH CONCRETE PER ASTM C-172, MODIFIED FOR SLUMP BY ASTM C-94.
- SLUMP PER ASTM C-143. ONE TEST AT POINT OF DISCHARGE FOR EACH DAYS POUR FOR EACH TYPE OF CONCRETE.
- AIR CONTENT PER ASTM C-173 (VOLUMETRIC) OR ASTM C-231 (PRESSURE). ONE TEST FOR EACH DAYS POUR FOR EACH TYPE OF CONCRETE.
- COMPRESSION TEST CYLINDERS PER ASTM C-31 (4 CYLINDERS)
- CONCRETE TEMPERATURE - TEST EACH TIME A SET OF CYLINDERS IS CAST.
- COMPRESSION STRENGTH TEST PER ASTM C-39. ONE SET FOR EACH DAYS POUR PLUS ADDITIONAL SETS FOR EACH 50 cy OVER AND ABOVE THE FIRST 25 cy. ONE CYLINDER TESTED AT 7 DAYS, TWO CYLINDERS TESTED AT 28 DAYS, AND ONE CYLINDER RETAINED FOR LATER TESTING IF REQUIRED.

STEEL ROOF DECK NOTES:

STEEL ROOF DECK SHALL CONFORM TO AISI SPECIFICATION FOR THE DESIGN OF LIGHT GAGE, COLD-FORMED STRUCTURAL STEEL MEMBERS AND THE STEEL DECK INSTITUTE'S DESIGN REQUIREMENTS.

STEEL ROOF DECK SHALL BE EITHER (SEE PLAN FOR LOCATIONS):
1½" DEEP, 20 GAGE MINIMUM, TYPE "B" BY VULCRAFT OR APPROVED EQUAL
OR
4" DEEP DOVETAIL ACOUSTIC, 18 GAGE MINIMUM, TORIS 4A, MANUFACTURED BY EPIC METALS. STEEL ROOF DECK SHALL BE GALVANIZED G90

STEEL ROOF DECK SHALL BE CONTINUOUS OVER A MINIMUM OF THREE SPANS, AND SHALL BE FASTENED TO THE SUPPORTS AT THE UNIT ENDS AND AT INTERMEDIATE SUPPORTS AS RECOMMENDED BY THE STEEL DECK MANUFACTURER. MINIMUM ATTACHMENT REQUIREMENTS SHALL BE 5/8" DIA. PUDDLE WELDS IN 36/4 PATTERN AT EVERY SUPPORT AND 12" o.c. AT DECK PERIMETER WITH SIDELAPS OF (2) #10 TEK SCREWS PER SPAN NOT TO EXCEED 24" O.C. MAX.

ALL ACCESSORIES TO THE STEEL DECK, INCLUDING EDGE ANGLES, POUR STOPS, COLUMN CLOSURES, END CLOSURES, COVER PLATES AND GIRDER FILLERS, SHALL BE IN ACCORDANCE WITH THE STEEL DECK INSTITUTE.

STEEL ANGLE FRAMING SHALL BE PROVIDED FOR ALL OPENINGS IN ROOF DECK GREATER THAN 12" IN EITHER DIRECTION.

PROVIDE FIELD TOUCH UP OF ALL WELDS IN DECK.

COLD FORMED METAL FRAMING NOTES:

ALL LIGHTWEIGHT STEEL PRODUCTS, DETAILING, FABRICATION AND INSTALLATION SHALL MEET THE REQUIREMENTS OF AISI "NORTH AMERICAN SPECIFICATION FOR THE DESIGN OF COLD FORMED STEEL STRUCTURAL MEMBERS", 2016 (2020) EDITION WITH 2020 SUPPLEMENTS.

STEEL GRADES:
12, 14, & 16 GAGE COMPONENTS Fy (MIN) = 50 ksi (ASTM A-446 GRADED)
18 GAGE COMPONENTS Fy (MIN) = 33 ksi (ASTM A-446 GRADE B)
20 GAGE COMPONENTS Fy (MIN) = 33 ksi (ASTM A-446 GRADE A)

THE CONTRACTOR IS RESPONSIBLE FOR PROVIDING ENGINEERED LIGHT-GAGE MEMBER SHOP DRAWINGS BASED ON THE LOADS AND DETAILS ON THE DRAWINGS. THE SHOP DRAWINGS AND CALCULATIONS SHALL BE SEALED BY A PROFESSIONAL ENGINEER REGISTERED IN THE STATE OF JURISDICTION.

ALL COMPONENTS SHALL BE ZINC COATED (G60 GALVANIZED) IN ACCORDANCE WITH ASTM A-525.

FLAME CUTTING OF MEMBERS OR HOLES IS NOT PERMITTED.

ALL FIELD CONNECTIONS SHALL CONFORM TO DETAILS SHOWN ON FABRICATION PLANS.

ALL STUDS, HARDWARE, ACCESSORIES, AND FASTENERS SHALL BE GALVANIZED.

ALL WELDING SHALL BE IN ACCORDANCE WITH AWS D1.3.

STRUCTURAL STEEL NOTES:

STEEL SHALL CONFORM TO THE "SPECIFICATIONS FOR STRUCTURAL STEEL BUILDINGS", LASTEST EDITION, OF THE AMERICAN INSTITUTE OF STEEL CONSTRUCTION.

ALL STRUCTURAL STEEL SHALL CONFORM TO ASTM A992, EXCEPT AS MODIFIED BELOW:
- ALL MISCELLANEOUS STRUCTURAL STEEL SHALL CONFORM TO ASTM A36.
- ALL HOLLOW STRUCTURAL SECTIONS SHALL CONFORM TO ASTM A500, GRADE B.
- ALL ANCHOR RODS SHALL CONFORM TO ASTM F1554, GRADE 36.
- ALL PLATE SHALL CONFORM TO ASTM A36.

THE STEEL FABRICATOR SHALL BE AISC CERTIFIED.

ALL WELDS SHALL USE E70XX ELECTRODES AND CONFORM TO THE "STRUCTURAL WELDING CODE (STEEL)", AWS D1.1, LATEST EDITION. ALL WELDERS SHALL BE CERTIFIED IN ACCORDANCE WITH AWS REQUIREMENTS.

ALL FIELD WELDS SHALL BE INSPECTED BY A CERTIFIED WELDING INSPECTOR.

ALL BOLTED CONNECTIONS SHALL BE BEARING TYPE, UTILIZING 3/4" DIA. ASTM A325-N TENSION CONTROL BOLTS, UNLESS SHOWN OTHERWISE.

ALL BOLTS, NUTS, AND WASHERS SHALL BE IN ACCORDANCE WITH THE LATEST SPECIFICATIONS APPROVED BY THE RESEARCH COUNCIL ON RIVETED AND BOLTED STRUCTURAL JOINTS.

REFER TO ARCHITECTURAL DRAWINGS FOR LIMITED AREAS OF STRUCTURAL STEEL THAT SHALL BE FIREPROOFED. ANY STRUCUTRAL STEEL THAT DOES NOT RECEIVE SPRAY-APPLIED FIREPROOFING SHALL BE SHOP PRIMED (ONE COAT OF 2 MIL. DRY FILM, MIN.) AND SHOP PAINTED. SHOP PRIMER TO BE FABRICATOR'S STANDARD COLOR. ALL STRUCTURAL STEEL EXPOSED TO WEATHER SHALL BE HOT-DIPPED GALVANIZED.

FIELD FLAME CUTTING OF ANY STRUCTURAL MEMBERS IS NOT PERMITTED.

ALL STEEL SHALL BE FABRICATED, ERECTED, AND TESTED IN ACCORDANCE WITH THE AMERICAN INSTITUTE OF STEEL CONSTRUCTION (AISC) "CODE OF STANDARD PRACTICE FOR STEEL BUILDINGS AND BRIDGES"

STRUCTURAL STEEL SHOP DRAWINGS, PREPARED BY THE STEEL SUBCONTRACTORS, SHOWING COMPLETE DIMENSIONS, DETAILS, SIZES, AND GRADES OF STEEL MEMBERS AND CONNECTIONS, TYPE AND NUMBER OF WELDS AND BOLTS, SHALL BE SUBMITTED FOR APPROVAL PRIOR TO THE FABRICATION OF THE STEEL COMPONENTS. THE STRUCTURAL STEEL SUBCONTRACTOR SHALL BE RESPONSIBLE FOR CHECKING, VERIFICATION AND COORDINATION OF DIMENSIONS AND DETAILS WITH THE STRUCTURAL AND OTHER PORTIONS OF THE CONTRACT DRAWINGS. THE STEEL SUBCONTRACTOR SHALL NOT REPRODUCE ANY PORTION OF THE STRUCTURAL CONTRACT DRAWINGS FOR UTILIZATION AS SHOP DRAWINGS, UNLESS APPROVAL OF THE STRUCTURAL ENGINEER IS OBTAINED.

ALL STRUCTURAL STEEL ERECTION AND SHORING SHALL BE INSPECTED BY AN INDEPENDENT TESTING AGENCY RETAINED BY THE OWNER FOR THE FOLLOWING ITEMS:
- VISUALLY INSPECT ALL CONNECTIONS, INCLUDING, BUT NOT LIMITED TO, BOLTS, WELDS, METAL DECK WELDS TO SUPPORT STRUCTURE, SHEAR CONNECTORS, AND METAL DECK SIDE LAPS.
- INSPECT STEEL ERECTION FOR ORIENTATION AND PLUMBNESS.

ALL STEEL CONNECTIONS SHALL BE DESIGNED BY THE STEEL FABRICATOR TO RESIST, AS A MINIMUM, THE REACTIONS SHOWN THUS XXx ON THESE DRAWINGS. REACTIONS NOT SHOWN SHALL BE DESIGNED TO RESIST 10 KIPS MINIMUM, SERVICE LOADS.

Architecture
Engineering
Environmental
Land Surveying
Companies

355 Research Parkway
Meriden, CT 06450
(203) 630-1406
(203) 630-2615 Fax

JOHN MALARY
No. 14423
REGISTERED
PROFESSIONAL ENGINEER
STRUCTURAL

PAWTUCKET-CENTRAL FALLS TRANSIT CENTER
300 PINE STREET, PAWTUCKET, RI

REVISIONS

NO	DATE	DESCRIPTION

Designed:	JRM
Drawn:	JRM
Reviewed:	CJA
Project No.:	2301115
Date:	04/09/2024

Issued for:
CONSTRUCTION DOCUMENTS

Title:
STRUCTURAL GENERAL NOTES

Sheet No.
S001

4/4/2024 4:24:36 PM C:\Users\jmalary\Documents\REVIT FILES\2023\2301115_RIPTA_PassengerFacility_R23_STR_jmalaryVN7W8.rvt

© 2022 BL COMPANIES, INC. THESE DRAWINGS SHALL NOT BE UTILIZED BY ANY PERSON, FIRM OR CORPORATION WITHOUT THE SPECIFIC WRITTEN PERMISSION OF BL COMPANIES.

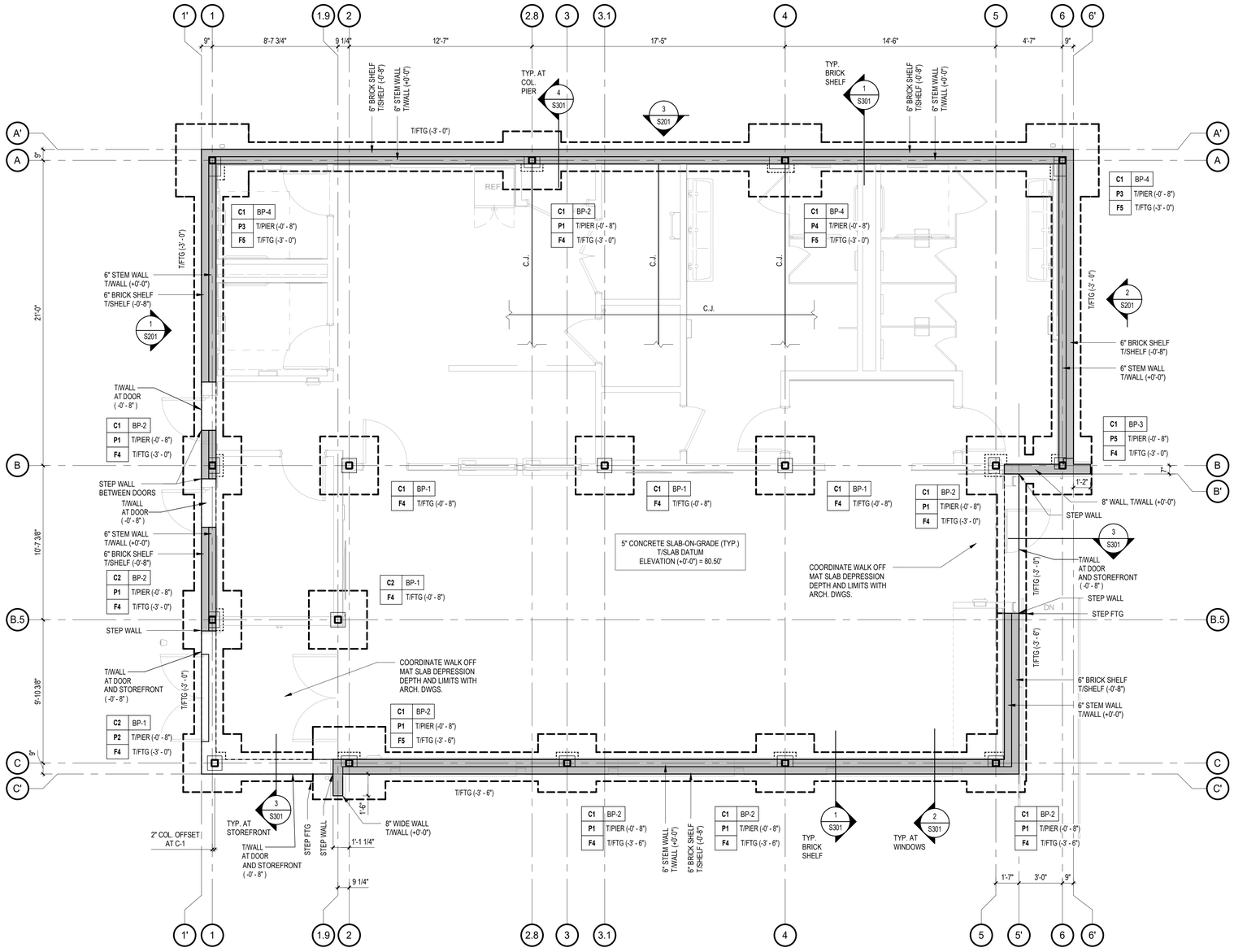

1 FOUNDATION PLAN

1/4" = 1'-0"

FOUNDATION PLAN NOTES:

1. SEE THE GENERAL NOTES ON S001 FOR ADDITIONAL DESIGN INFORMATION RELATED TO THE FOUNDATION DESIGN AND GEOTECHNICAL ENGINEERING REPORT.
2. SLAB ON GRADE SHALL CONSIST OF A 5" CONCRETE SLAB REINFORCED WITH 6x6-W2.1xW2.1 WELDED WIRE FABRIC REINFORCEMENT ON 15 MIL VAPOR BARRIER ON COMPACTED FILL. THE COMPACTED FILL SHALL BE A MINIMUM OF 9" THICKNESS OF BASE COURSE SAND AND GRAVEL COMPACTED TO AT LEAST 95% ASTM D-1557 MAXIMUM DRY DENSITY. REFER TO THE GEOTECHNICAL REPORT FOR SUBGRADE PREPARATION RECOMMENDATIONS AND REQUIREMENTS.
3. TOP OF WALL = 0'-0" UNLESS NOTED OTHERWISE (SUCH AS AT DOORS, DOCKS, AND GLASS). FOR TYPICAL SLAB DETAILING AT DOORS, SEE DETAIL 5/S501 FOR DOOR OPENING SIZES AND LOCATIONS SEE ARCHITECTURAL DRAWINGS.
4. "Fx" DENOTES FOOTING TYPE. SEE FOOTING SCHEDULE THIS SHEET FOR SIZE AND REINFORCING.
5. T/FTG [-#'-#"] INDICATES DISTANCE BELOW DATUM ELEVATION TO TOP OF FOOTING. ACTUAL ELEVATIONS MAY VARY DEPENDING ON SPECIFIC SOIL CONDITIONS ENCOUNTERED.
6. "Px" DENOTES PIER TYPE. SEE PIER SCHEDULE THIS SHEET FOR SIZE AND REINFORCING AS WELL AS SHEET S302 FOR ADDITIONAL PIER DETAILING. ALL PIER AND PILASTER TIE REINFORCING TO CONFORM TO ACI 318 DETAILING REQUIREMENTS.
7. T/PIER [-#'-#"] INDICATES DISTANCE BELOW DATUM ELEVATION TO TOP OF PIER. T/PIER = [-0'-10"] UNLESS OTHERWISE NOTED.
8. "Cx" DENOTES COLUMN MARK. SEE COLUMN FOR SIZE.
9. "BP-x" DENOTES COLUMN BASEPLATE. SEE 10/S301 FOR BASEPLATE AND ANCHOR ROD SIZES AND DETAILS.
10. "SF" DENOTES STEPPED FOOTING. SEE DETAIL 7/S501 FOR ADDITIONAL INFORMATION.
11. "CJ" INDICATES CONTROL JOINT. MAX CONTRACTION JOINT SPACING= 10'-0". SEE TYPICAL DETAILS FOR CONTROL AND CONSTRUCTION JOINT DETAILS.
12. BALANCE BACKFILL ON EITHER SIDE OF NEW FOUNDATION WALLS.
13. FOR EQUIPMENT PADS, EMBEDMENTS, SLAB PENETRATIONS AND DEPRESSIONS AND FOUNDATION PENETRATIONS, SEE MECHANICAL, ELECTRICAL, AND PLUMBING DRAWINGS.
14. REFERENCE ARCHITECTURAL FOUNDATION DETAILS FOR PERIMETER INSULATION, DRAINAGE AND WATERPROOFING LOCATIONS.
15. COORDINATE ALL DIMENSIONS WITH ARCHITECTURAL DRAWINGS.

PIER SCHEDULE

NOTE: USE #3 TIES AT 12" OC AT PIERS (TYP) (TRIPLED AT TOP OF PIER)

PIER MARK	SIZE (LxW)	REINFORCEMENT	REFERENCE
P1	18x18	(3) #6 VERT. EACH FACE	5/S302
P2	18x20	(3) #6 VERT. EACH FACE	6/S302
P3	19x25	(4)#6 SHORT FACE, (5) #6 LONG FACE	7/S302
P4	19x22	(4) #6 sHORT FACE, (5) #6 LONG FACE	8/S302
P5	18x15	(3) #6 VERT. EACH FACE	9/S302

FOOTING SCHEDULE

FOOTING MARK	SIZE (LxWxH)	REINFORCING (BOTTOM, UON)	REFERENCE
F4	4'-0"x4'-0"x1'-0"	w/ (5) - #5 Bars Each Way	
F5	5'-0"x5'-0"x1'-0"	w/ (6) - #5 Bars Each Way	

COLUMN SCHEDULE

COLUMN MARK	COLUMN SIZE
C1	HSS5 1/2x5 1/2x5/16
C2	HSS5 1/2x5 1/2x1/4

TRUE NORTH

Architecture
Engineering
Environmental
Land Surveying
BL Companies

355 Research Parkway
Meriden, CT 06450
(203) 630-1406
(203) 630-2615 Fax

JOHN MALARY
No. 14423
REGISTERED PROFESSIONAL ENGINEER STRUCTURAL

PAWTUCKET-CENTRAL FALLS TRANSIT CENTER
300 PINE STREET, PAWTUCKET, RI

REVISIONS

NO	DATE	DESCRIPTION

Designed: JRM
Drawn: JRM
Reviewed: CJA
Project No.: 2301115
Date: 04/09/2024
Issued for: CONSTRUCTION DOCUMENTS

Title: STRUCTURAL FOUNDATION PLAN

Sheet No. S101.1

4/4/2024 4:24:38 PM C:\Users\jmalary\Documents\REVIT FILES\2023\2301115_RIPTA_PassengerFacility_R23_STR_jmalaryVN7W8.rvt

© 2022 BL COMPANIES, INC. THESE DRAWINGS SHALL NOT BE UTILIZED BY ANY PERSON, FIRM OR CORPORATION WITHOUT THE SPECIFIC WRITTEN PERMISSION OF BL COMPANIES.

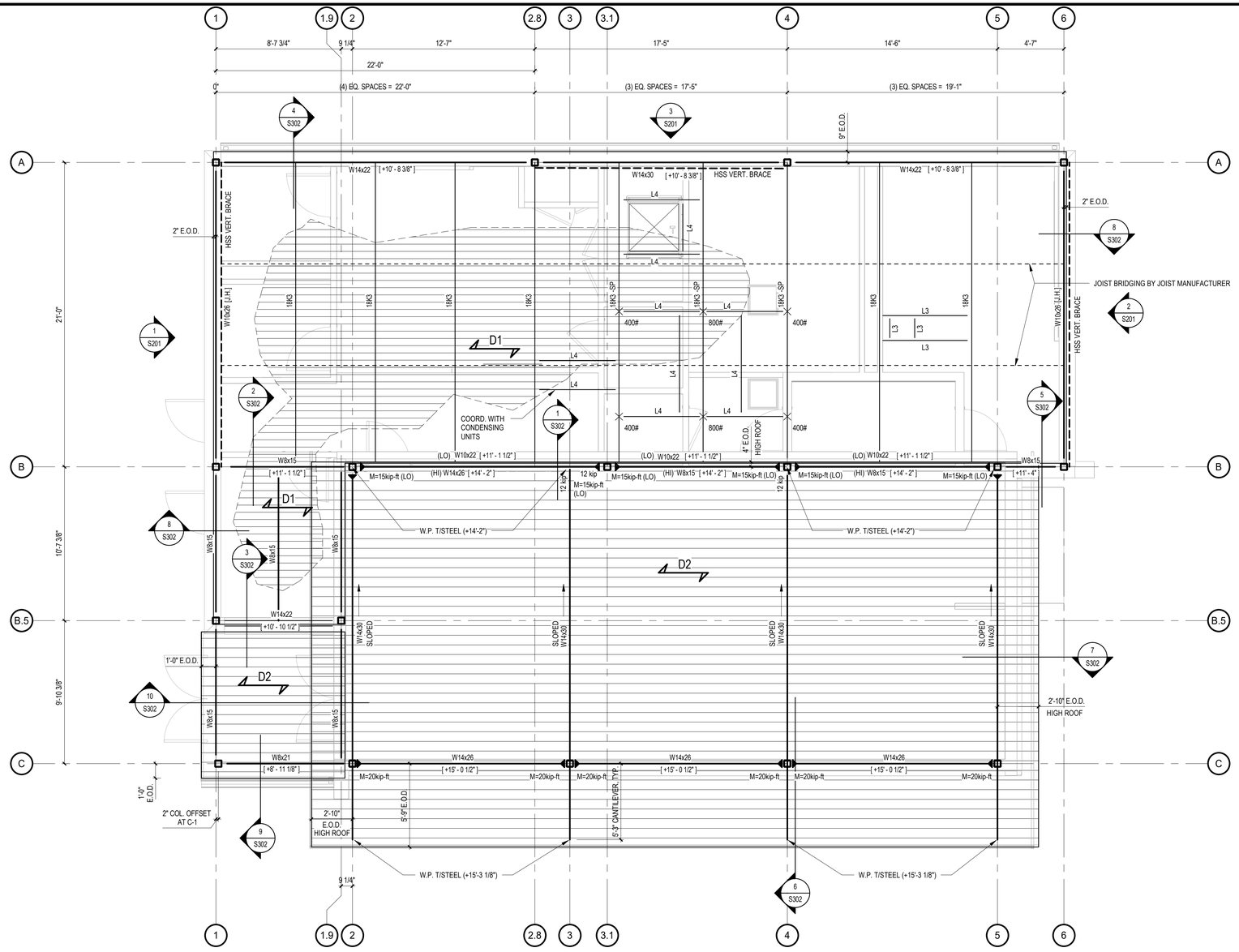

1 PARTIAL ROOF FRAMING PLAN A

1/4" = 1'-0"

ROOF FRAMING PLAN NOTES:

1. TOP OF STEEL ELEVATION FOR ROOF CONSTRUCTION IS [+XX'-XX"] ABOVE DATUM FIRST FLOOR SLAB ELEVATION, UNLESS NOTED OTHERWISE.
2. "D1" DENOTES ROOF DECK FOR THE LOW ROOF AND SHALL BE G90 1½", 20 GAGE, TYPE "B" ROOF DECK AS MANUFACTURED BY VULCRAFT OR APPROVED EQUAL.
3. "D2" DENOTES ROOF DECK FOR THE HIGH ROOF AND VESTIBULE AND SHALL BE G90 TORIS 4A (4" DOVETAIL ACOUSTIC ROOF DECK) 18 GAGE AS MANUFACTURED BY EPIC METALS.
4. FASTEN ROOF DECK TO STEEL FRAMING AS SHOWN IN METAL DECK SCHEDULE.
5. FOR SIZES AND LOCATIONS OF ROOF PENETRATIONS, SEE ARCHITECTURAL, MECHANICAL, AND PLUMBING DRAWINGS.
6. RTU LOCATIONS ARE APPROXIMATE AND MAY CHANGE. CONFIRM LOCATIONS PRIOR TO STEEL FABRICATION.
7. PROVIDE L3x3x1/4 STEEL ANGLES FOR ROOF DECKING SUPPORT AROUND ROOF DRAINS. COORDINATE LOCATION WITH ARCHITECTURAL DRAWINGS.
8. SEE STRUCTURAL ELEVATIONS ON S201 FOR VERTICAL BRACING, HEADERS AND ADDITIONAL FRAMING INFORMATION.
9. THE STEEL FABRICATOR SHALL DESIGN BOTH END SHEAR REACTIONS TO RESIST ASD END REACTIONS DENOTED AS V=XXk ON BEAM LABELS. REACTIONS NOT SHOWN SHALL BE 10k MINIMUM.
10. SEE JOIST LOADING SCHEDULE FOR JOIST LOADING INFORMATION.
11. SEE TYPICAL DETAILS FOR JOIST REINFORCING DETAILS AT CONCENTRATED LOADS.
12. SEE TYPICAL DETAILS FOR ROOF FRAME DETAILS FOR PENETRATIONS NOT SHOWN > 12" Ø.
13. DENOTES FULLY RESTRAINED MOMENT CONNECTION.
14. DESIGNATION DENOTES BRACED FRAME BAY, SEE ELEVATIONS FOR ADDITIONAL MEMBER INFORMATION.
15. JOIST SUPPLIER TO PROVIDE HORIZONTAL BRIDGING AS REQUIRED BY SJI AND DESIGN OF JOIST.
16. COORDINATE ALL DIMENSIONS WITH ARCHITECTURAL DRAWINGS.
17. *XXk DENOTES ADDITIONAL UNFACTORED SERVICE LOADS SNOW LOADS OR UNFACTORED MEP LOADS.

TRUE NORTH

Architecture
Engineering
Environmental
Land Surveying
BL Companies

355 Research Parkway
Meriden, CT 06450
(203) 630-1406
(203) 630-2615 Fax

JOHN MALARY
No. 14423
REGISTERED PROFESSIONAL ENGINEER
STRUCTURAL

PAWTUCKET-CENTRAL FALLS TRANSIT CENTER
300 PINE STREET, PAWTUCKET, RI

REVISIONS

NO	DATE	DESCRIPTION

Designed:	JRM
Drawn:	JRM
Reviewed:	CJA
Project No.:	2301115
Date:	04/09/2024

Issued for:
CONSTRUCTION DOCUMENTS

Title:
STRUCTURAL ROOF FRAMING PLAN

Sheet No.
S101.3

4/4/2024 4:24:39 PM C:\Users\jmalary\Documents\REVIT FILES\2023\2301115_RIPTA_PassengerFacility_R23_STR_jmalaryVN7W8.rvt

© 2022 BL COMPANIES, INC. THESE DRAWINGS SHALL NOT BE UTILIZED BY ANY PERSON, FIRM OR CORPORATION WITHOUT THE SPECIFIC WRITTEN PERMISSION OF BL COMPANIES.

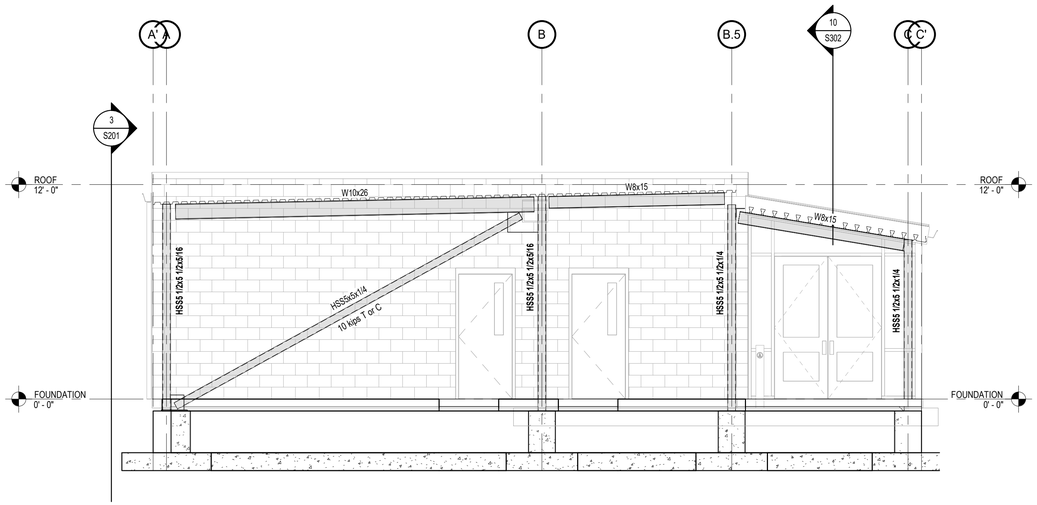

1 BRACED FRAME AT COLUMN LINE 1
1/4" = 1'-0"

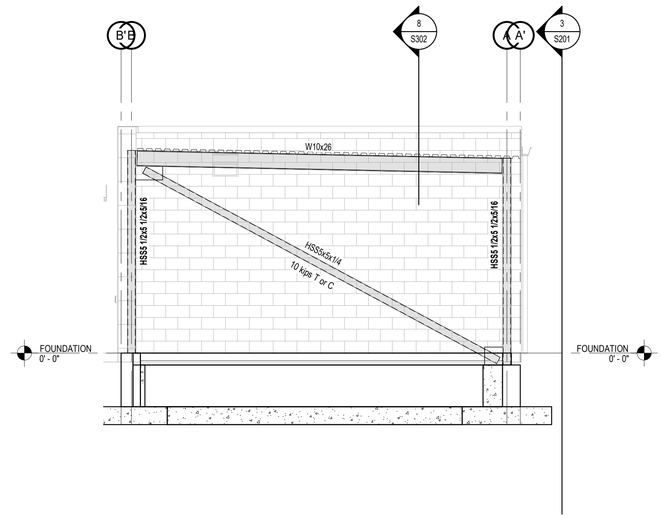

2 BRACED FRAME AT COLUMN LINE 6
1/4" = 1'-0"

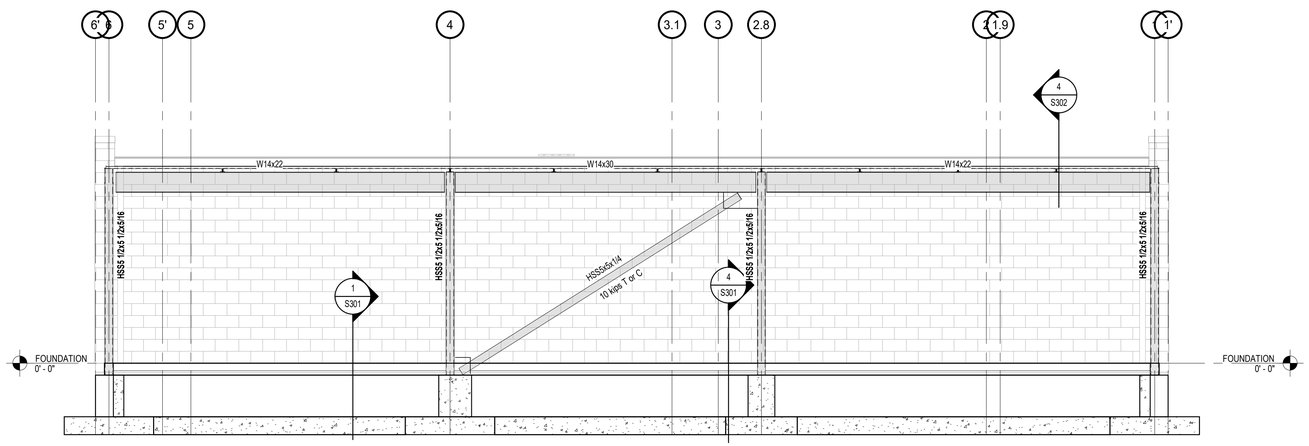

3 BRACED FRAME AT COLUMN LINE A
1/4" = 1'-0"

TYPICAL BRACED FRAME ELEVATION NOTES:

1. "XX kips T OR C" DENOTES ASD FACTORED AXIAL FORCE IN BRACE, TENSION OR COMPRESSION.
2. ALL FRAMING DETAILS SHALL BE CONFIGURED SUCH THAT THE CENTER OF GRAVITY FOR ALL MEMBERS INTERSECTS AT A SINGLE COMMON WORK POINT (I.E. NO CONNECTION ECCENTRICITY.
3. STEEL FABRICATOR SHALL PROVIDE ADDITIONAL STIFFENER PLATES AND DOUBLER PLATES AS REQUIRED TO RESIST INDICATED LOADS.
4. PROVIDE ONE ERECTION BOLT (MINIMUM) AT EACH END OF TUBE STEEL BRACES.
5. ONE THIRD INCREASE WILL NOT BE ALLOWED.

Architecture
Engineering
Environmental
Land Surveying
BL Companies

355 Research Parkway
Meriden, CT 06450
(203) 630-1406
(203) 630-2615 Fax

JOHN MALARY
No. 14423
REGISTERED PROFESSIONAL ENGINEER STRUCTURAL

PAWTUCKET-CENTRAL FALLS TRANSIT CENTER
300 PINE STREET, PAWTUCKET, RI

REVISIONS

NO	DATE	DESCRIPTION

Designed:	JRM
Drawn:	JRM
Reviewed:	CJA
Project No.:	2301115
Date:	04/09/2024
Issued for:	CONSTRUCTION DOCUMENTS

Title:
STRUCTURAL EXTERIOR ELEVATIONS

Sheet No.
S201

4/4/2024 4:24:40 PM C:\Users\jmalary\Documents\REVIT FILES\2023\2301115_RIPTA_PassengerFacility_R23_STR_jmalaryVN7W8.rvt

© 2022 BL COMPANIES, INC. THESE DRAWINGS SHALL NOT BE UTILIZED BY ANY PERSON, FIRM OR CORPORATION WITHOUT THE SPECIFIC WRITTEN PERMISSION OF BL COMPANIES.

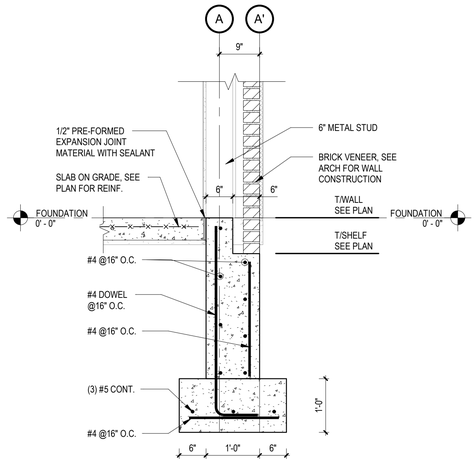

1 SECTION AT BRICK SHELF
3/4" = 1'-0"

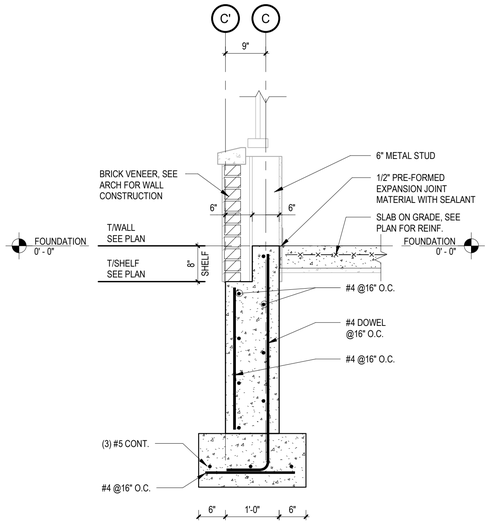

2 SECTION AT BRICK SHELF W/ LOW WALL
3/4" = 1'-0"

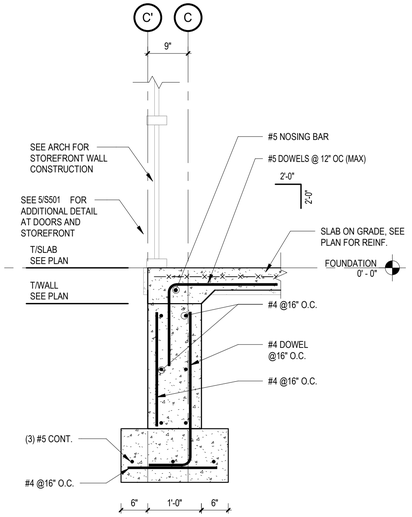

3 SECTION AT STOREFRONT
3/4" = 1'-0"

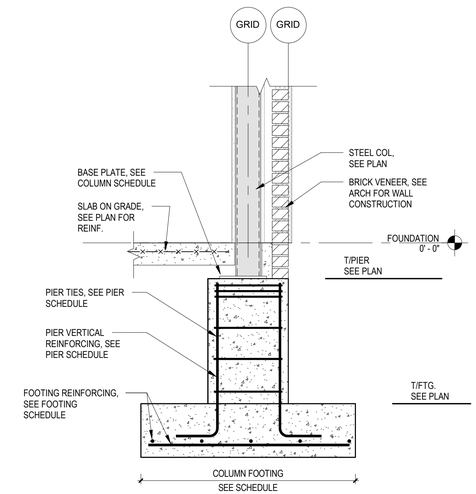

4 TYP. SECTION AT COL FOOTING
3/4" = 1'-0"

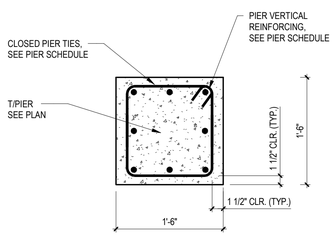

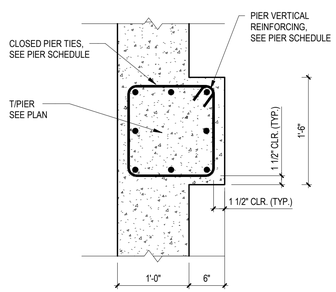

NOTES:
1. WALL REINFORCEMENT NOT SHOWN FOR CLARITY.
2. CONTINUE WALL REINFORCEMENT THROUGH PIER REINFORCEMENT.

5 P1 - PIER DETAIL
1" = 1'-0"

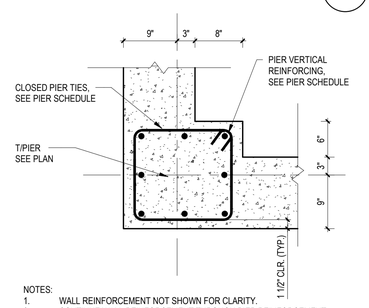

NOTES:
1. WALL REINFORCEMENT NOT SHOWN FOR CLARITY.
2. CONTINUE WALL REINFORCEMENT THROUGH PIER REINFORCEMENT.

6 P2 - PIER DETAIL
1" = 1'-0"

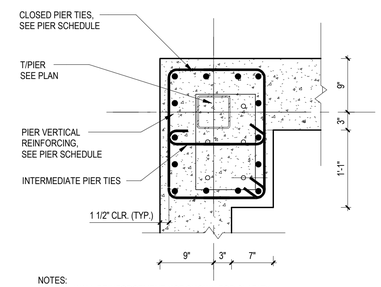

NOTES:
1. WALL REINFORCEMENT NOT SHOWN FOR CLARITY.
2. CONTINUE WALL REINFORCEMENT THROUGH PIER REINFORCEMENT.

7 P3 - PIER DETAIL
1" = 1'-0"

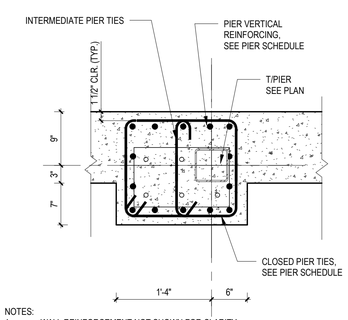

NOTES:
1. WALL REINFORCEMENT NOT SHOWN FOR CLARITY.
2. CONTINUE WALL REINFORCEMENT THROUGH PIER REINFORCEMENT.

8 P4 - PIER DETAIL
1" = 1'-0"

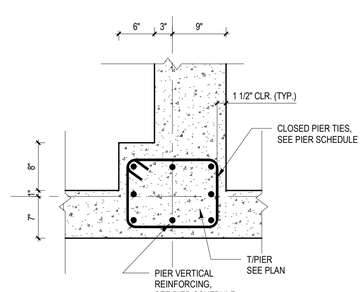

NOTES:
1. WALL REINFORCEMENT NOT SHOWN FOR CLARITY.
2. CONTINUE WALL REINFORCEMENT THROUGH PIER REINFORCEMENT.

9 P5 - PIER DETAIL
1" = 1'-0"

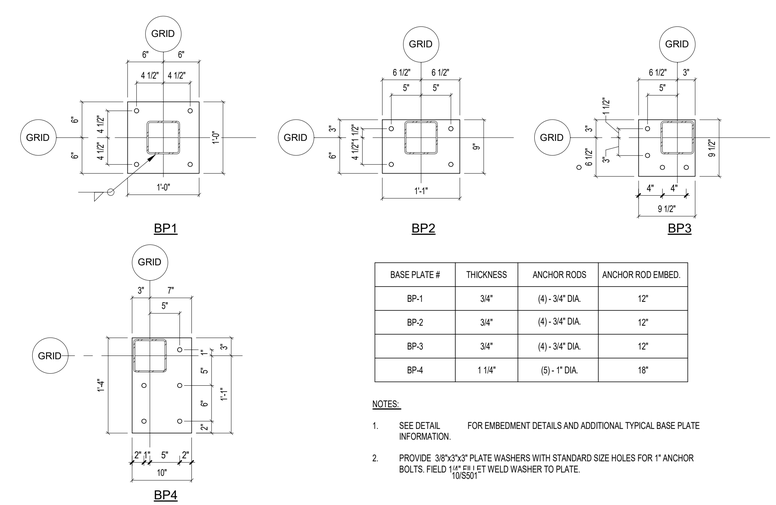

BASE PLATE #	THICKNESS	ANCHOR RODS	ANCHOR ROD EMBED.
BP-1	3/4"	(4) - 3/4" DIA.	12"
BP-2	3/4"	(4) - 3/4" DIA.	12"
BP-3	3/4"	(4) - 3/4" DIA.	12"
BP-4	1 1/4"	(5) - 1" DIA.	18"

NOTES:
1. SEE DETAIL 10/S501 FOR EMBEDMENT DETAILS AND ADDITIONAL TYPICAL BASE PLATE INFORMATION.
2. PROVIDE 3/8"x3"x3" PLATE WASHERS WITH STANDARD SIZE HOLES FOR 1" ANCHOR BOLTS. FIELD FILLET WELD WASHER TO PLATE.

10 BASEPLATE DETAILS
1" = 1'-0"

Architecture Engineering Environmental Land Surveying
BL Companies
355 Research Parkway
Meriden, CT 06450
(203) 630-1406
(203) 630-2615 Fax

JOHN MALARY No. 14423 REGISTERED PROFESSIONAL ENGINEER STRUCTURAL

PAWTUCKET-CENTRAL FALLS TRANSIT CENTER
300 PINE STREET, PAWTUCKET, RI

REVISIONS

NO	DATE	DESCRIPTION

Designed:	JRM
Drawn:	JRM
Reviewed:	CJA
Project No.:	2301115
Date:	04/09/2024
Issued for:	CONSTRUCTION DOCUMENTS

Title: FOUNDATION SECTIONS, DETAILS AND BASEPLATES

Sheet No. S301

4/4/2024 4:24:41 PM C:\Users\jmalary\Documents\REVIT FILES\2023\2301115_RIPTA_PassengerFacility_R23_STR_jmalaryVN7W8.rvt

© 2022 BL COMPANIES, INC. THESE DRAWINGS SHALL NOT BE UTILIZED BY ANY PERSON, FIRM OR CORPORATION WITHOUT THE SPECIFIC WRITTEN PERMISSION OF BL COMPANIES.

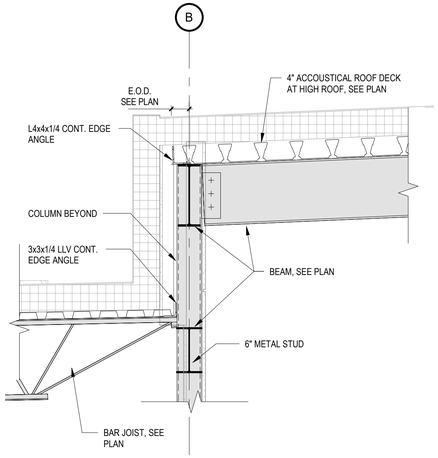

1 ROOF SECTION B-LINE HIGH AND LOW ROOFS
3/4" = 1'-0"

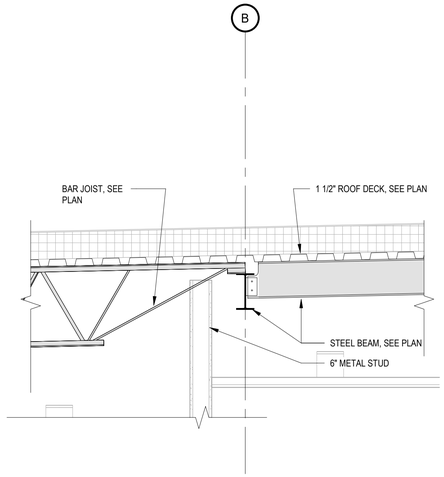

2 ROOF SECTION B-LINE LOW ROOF
3/4" = 1'-0"

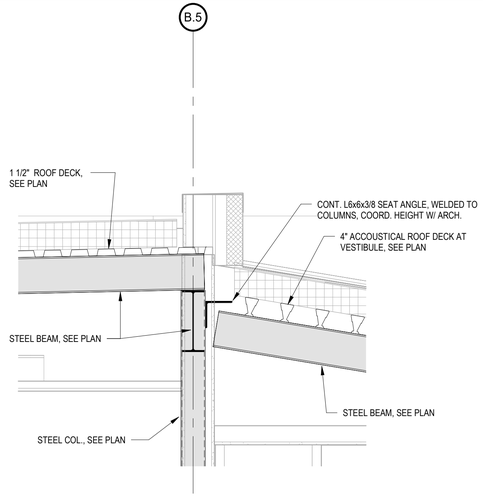

3 ROOF SECTION B.5 LINE AT VESTIBULE
3/4" = 1'-0"

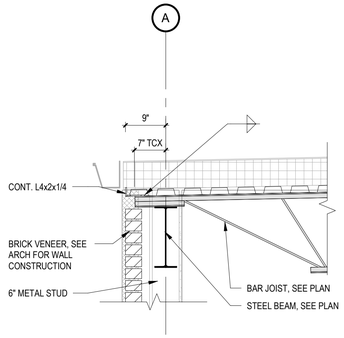

4 ROOF SECTION A-LINE
3/4" = 1'-0"

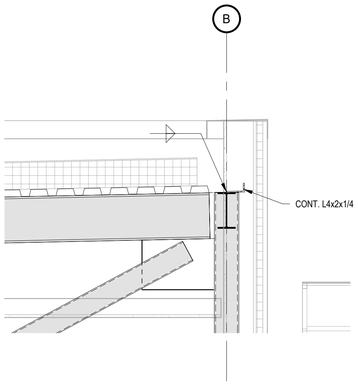

5 ROOF SECTION B-LINE
3/4" = 1'-0"

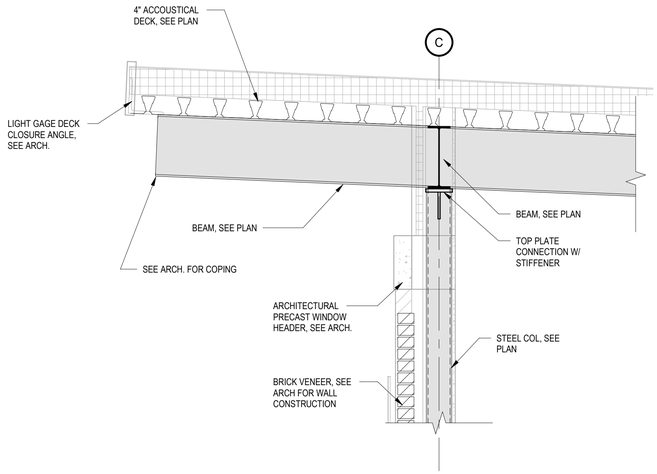

6 ROOF SECTION C-LINE AT HIGH ROOF EXTENSION
3/4" = 1'-0"

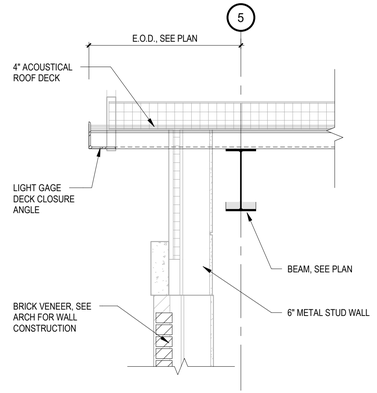

7 ROOF SECTION 5-LINE HIGH ROOF OVERHANG
3/4" = 1'-0"

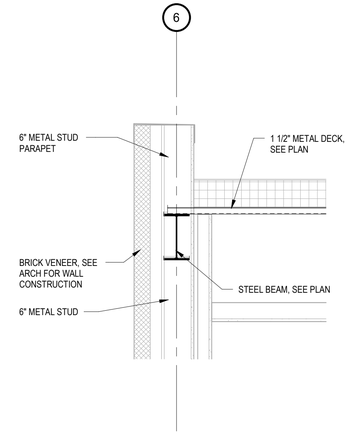

8 ROOF SECTION - 1 LINE
3/4" = 1'-0"

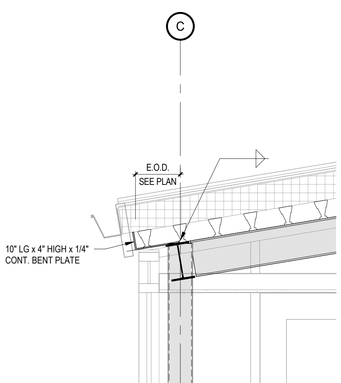

9 ROOF SECTION - C LINE AT ENTRY VESTIBULE
3/4" = 1'-0"

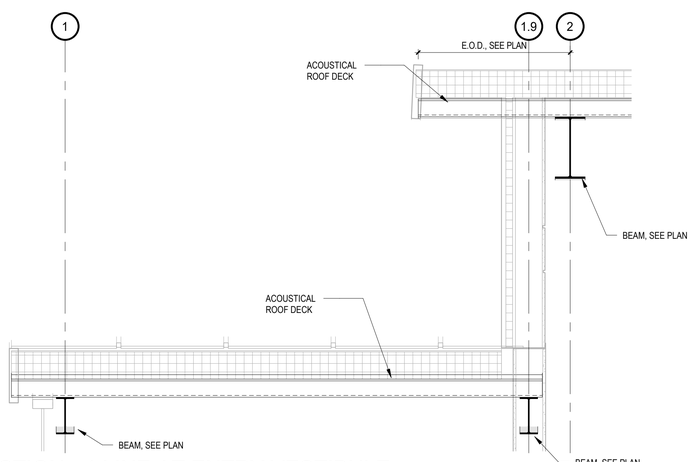

10 ROOF SECTION - 1 LINE AT ENTRY VESTIBULE
3/4" = 1'-0"

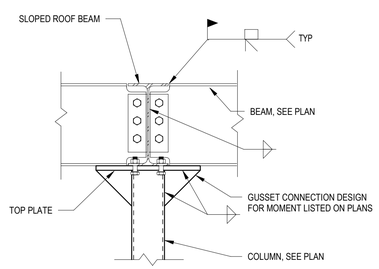

11 BEAM CONNECTION DETAIL AT HIGH ROOF
1" = 1'-0"

Architecture
Engineering
Environmental
Land Surveying
BL Companies
355 Research Parkway
Meriden, CT 06450
(203) 630-1406
(203) 630-2615 Fax

JOHN MALARY
No. 14423
REGISTERED
PROFESSIONAL ENGINEER
STRUCTURAL

PAWTUCKET-CENTRAL FALLS TRANSIT CENTER
300 PINE STREET, PAWTUCKET, RI

REVISIONS

NO	DATE	DESCRIPTION

Designed:	JRM
Drawn:	JRM
Reviewed:	CJA
Project No.:	2301115
Date:	04/09/2024

Issued for:
CONSTRUCTION DOCUMENTS

Title:
FRAMING SECTIONS

Sheet No.
S302

4/4/2024 4:24:42 PM C:\Users\jmalary\Documents\REVIT FILES\2023\2301115_RIPTA_PassengerFacility_R23_STR_jmalaryVN7W8.rvt

© 2022 BL COMPANIES, INC. THESE DRAWINGS SHALL NOT BE UTILIZED BY ANY PERSON, FIRM OR CORPORATION WITHOUT THE SPECIFIC WRITTEN PERMISSION OF BL COMPANIES.

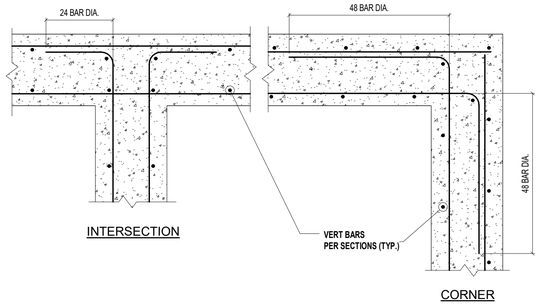

NOTE:

1. REBAR SHOWN HERE FOR GRAPHICAL PURPOSES ONLY. SEE WALL SECTIONS FOR ACTUAL REBAR ORIENTATION.
2. HOOK ALL HORIZONTAL REINFORCING AS SHOWN OR PROVIDE HOOKED SPLICE BARS TYPICAL.
3. DETAIL SIMILAR FOR SINGLE LINE OF REBAR.

1 FOUNDATION WALL REINFORCEMENT DETAILS
1" = 1'-0"

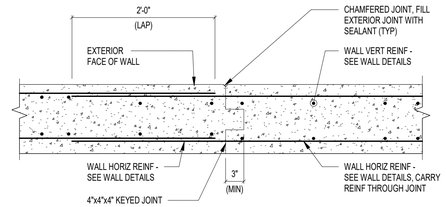

NOTE:

1. SPACING OF WALL CONSTRUCTION JOINTS SHALL NOT EXCEED 40 FEET.
2. CONTRACTION JOINT SHALL BE PLACED MIDSPAN BETWEEN COLUMN BAYS.

2 CONCRETE WALL CONSTRUCTION JOINT DETAIL
1" = 1'-0"

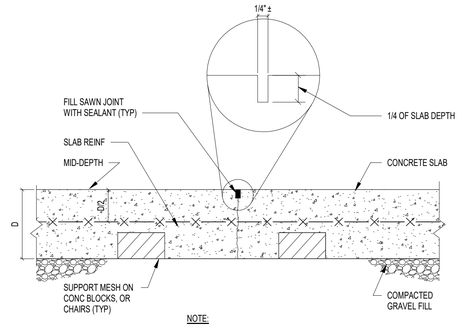

NOTE:

1. CONTRACTOR MAY SUBSTITUTE PREFORMED KEYED JOINT FOR SAWN JOINT.

3 SLAB CRACK CONTROL JOINT DETAIL
1" = 1'-0"

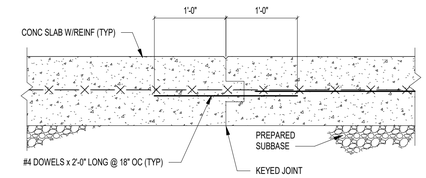

4 SLAB CONSTRUCTION JOINT DETAIL
1" = 1'-0"

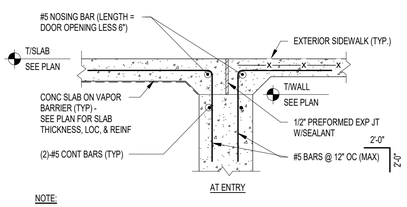

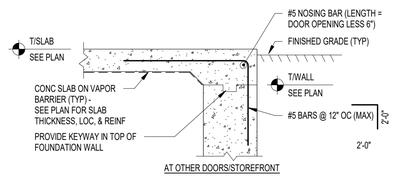

NOTE:

1. SEE TYPICAL FOUNDATION DETAIL FOR FOUNDATION WALL REINFORCEMENT TYPICAL.

5 SLAB ON GRADE DETAIL AT EXTERIOR DOOR
3/4" = 1'-0"

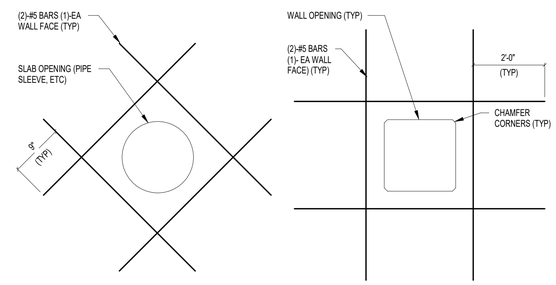

6 CONCRETE WALL OPENING DETAIL - 12" AND LARGER
1" = 1'-0"

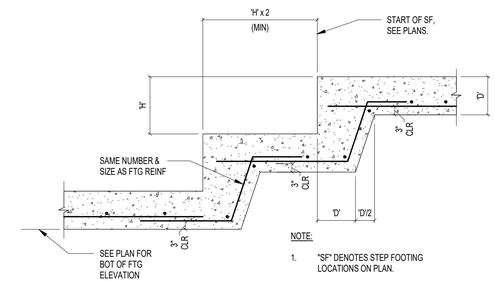

NOTE:

1. "SF" DENOTES STEP FOOTING LOCATIONS ON PLAN.

7 STEPPED FOOTING DETAIL
1" = 1'-0"

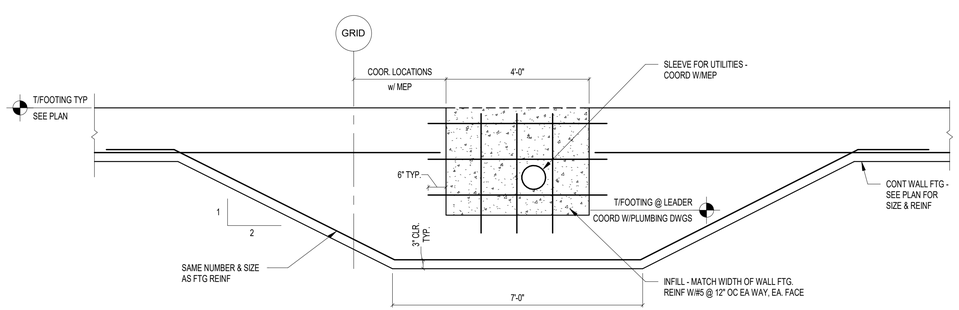

8 TYPICAL STEPPED FOOTING AT UTILITIES
1/2" = 1'-0"

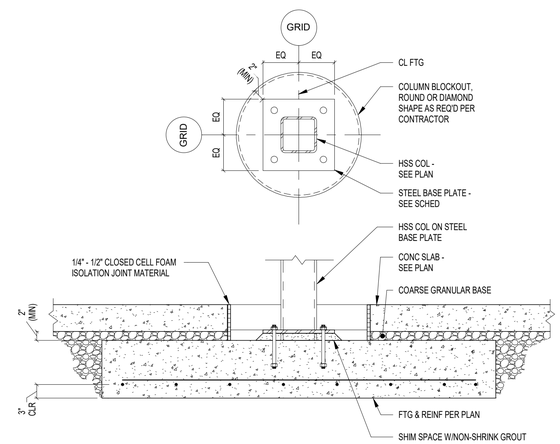

9 HSS COLUMN TO FOOTING
3/4" = 1'-0"

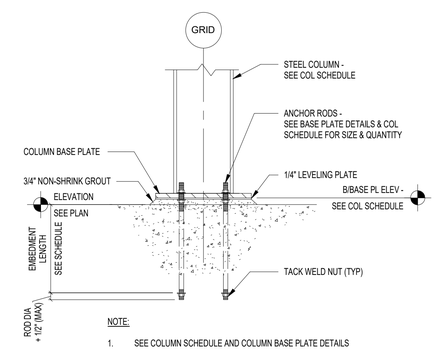

NOTE:

1. SEE COLUMN SCHEDULE AND COLUMN BASE PLATE DETAILS FOR BASE PLATE AND ANCHOR ROD DETAILS.

10 TYP ANCHOR ROD EMBED. DETAIL
1" = 1'-0"

Architecture
Engineering
Environmental
Land Surveying
BL Companies

355 Research Parkway
Meriden, CT 06450
(203) 630-1406
(203) 630-2615 Fax

JOHN MALARY
No. 14423
REGISTERED
PROFESSIONAL ENGINEER
STRUCTURAL

PAWTUCKET-CENTRAL FALLS TRANSIT CENTER
300 PINE STREET, PAWTUCKET, RI

REVISIONS

NO	DATE	DESCRIPTION

Designed:	JRM
Drawn:	JRM
Reviewed:	CJA
Project No.:	2301115
Date:	04/09/2024
Issued for:	CONSTRUCTION DOCUMENTS

Title: TYPICAL FOUNDATION DETAILS

Sheet No.

S501

4/4/2024 4:24:43 PM C:\Users\jmalary\Documents\REVIT FILES\2023\2301115_RIPTA_PassengerFacility_R23_STR_jmalaryVN7W8.rvt

© 2022 BL COMPANIES, INC. THESE DRAWINGS SHALL NOT BE UTILIZED BY ANY PERSON, FIRM OR CORPORATION WITHOUT THE SPECIFIC WRITTEN PERMISSION OF BL COMPANIES.

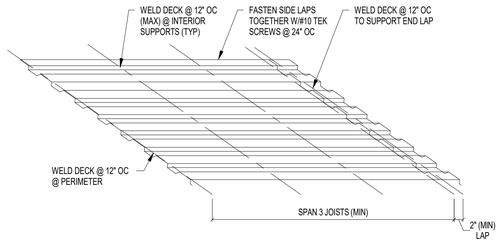

1 DECK ATTACHMENT DETAIL
1" = 1'-0"

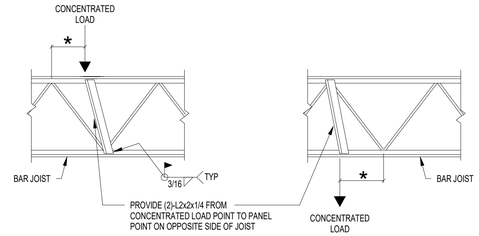

NOTES:

1. * INDICATES WHEN CONCENTRATED LOADS OCCUR AT A DISTANCE MORE THAN 4" FROM A PANEL POINT PROVIDE AN ANGLE STRUT FROM POINT OF SUPPORT TO JOIST PANEL POINT.
2. WHEN PIPES/CONDUITS ARE LESS THAN 4" DIAMETER JOISTS DO NOT REQUIRE REINFORCING.

2 JOIST REINFORCING
3/4" = 1'-0"

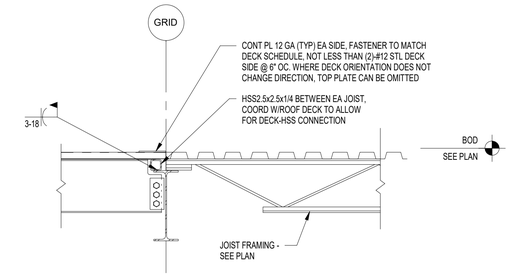

3 TYP ROOF DECK TRANSITION AT WF BEAM
3/4" = 1'-0"

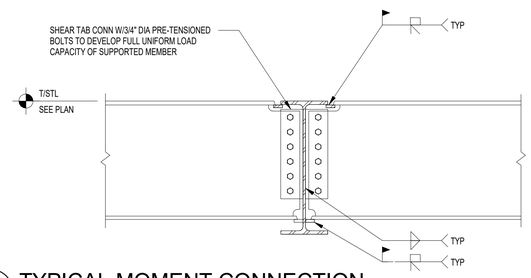

4 TYPICAL MOMENT CONNECTION
3/4" = 1'-0"

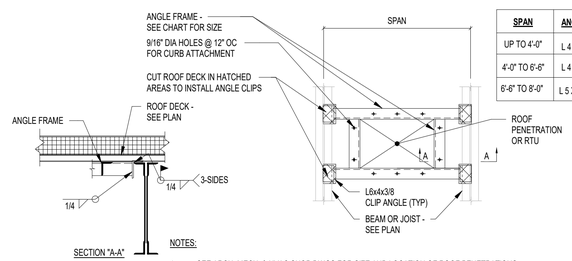

SPAN	ANGLE SIZE
UP TO 4'-0"	L 4 X 4 X 5/16
4'-0" TO 6'-6"	L 4 X 4 X 3/8
6'-6" TO 8'-0"	L 5 X 5 X 5/16

NOTES:

1. SEE ARCH, MECH, & HVAC SHOP DWGS FOR SIZE AND LOCATION OF ROOF PENETRATIONS.
2. PROVIDE SUPPORT FRAMES FOR ALL PENETRATIONS GREATER THAN 12" IN ANY ONE DIMENSION.
3. WHEREVER POSSIBLE LOCATE SUPPORT POINTS OF FRAMES OVER TOP CHORD PANEL POINTS. SEE JOIST REINFORCING DETAIL.
4. SEE JOIST REINFORCING DETAIL WHEN SUPPORT POINTS DON'T ALIGN WITH JOIST PANEL POINTS.
5. WHERE DETAIL IS SHOWN FOR EQUIPMENT RAILS WITHOUT DUCT PENETRATIONS, ALIGN ANGLES WITH ROOF RAILS FOR ATTACHMENT. DECK TO REMAIN IN PLACE.
6. PROVIDE PREMOLDED DECK FLUTE FILLER BELOW ROOF CURBS WHERE CURB IS PARALLEL TO FLUTES.

5 TYPICAL ROOF PENETRATION SUPPORT
3/4" = 1'-0"

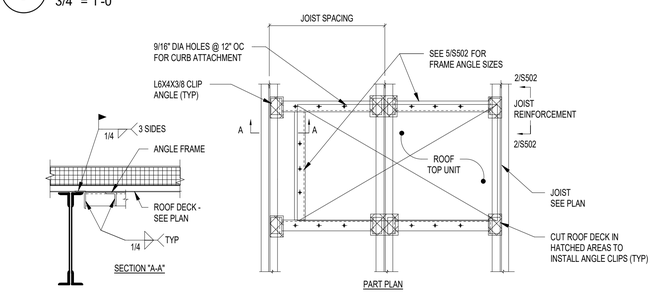

NOTES:

1. SEE ARCHITECTURAL, MECHANICAL, & HVAC SHOP DRAWINGS FOR SIZE AND LOCATION OF ROOF PENETRATIONS BELOW RTU. DO NOT COMPLETELY REMOVE ROOF DECK BELOW UNIT.
2. LOCATE ONE EDGE OF ROOF TOP EQUIPMENT CURB OVER A JOIST.
3. SEE JOIST REINFORCING DETAIL 2/S502 WHEN SUPPORT POINTS DO NOT ALIGN WITH JOIST PANEL POINTS.
4. IF UNIT IS SMALL ENOUGH TO FIT BETWEEN TWO JOISTS, ONLY PROVIDE ANGLES BETWEEN TWO JOISTS.
5. PROVIDE PREMOLDED DECK FLUTE FILLER BELOW ROOF CURBS WHERE CURB IS PARALLEL TO FLUTES.

6 ROOF TOP AC UNIT JOIST SUPPORT FRAME NOT AT COLUMN
3/4" = 1'-0"

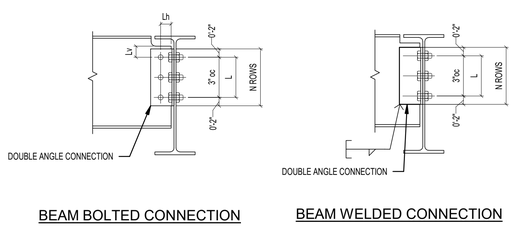

BEAM BOLTED CONNECTION

BEAM WELDED CONNECTION

7 TYPICAL BEAM TO BEAM CONNECTION
3/4" = 1'-0"

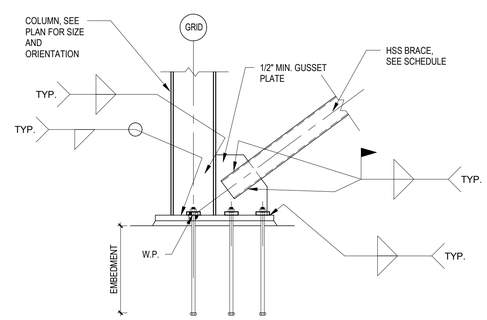

8 COLUMN BASE PLATE DETAIL - AT BRACE
3/4" = 1'-0"

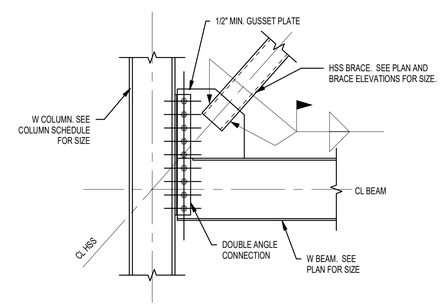

9 TYP DIAG. BRACE TO HSS COLUMN
3/4" = 1'-0"

Architecture
Engineering
Environmental
Land Surveying
BL Companies

355 Research Parkway
Meriden, CT 06450
(203) 630-1406
(203) 630-2615 Fax

JOHN MALARY
No. 14423
REGISTERED PROFESSIONAL ENGINEER
STRUCTURAL

PAWTUCKET-CENTRAL FALLS TRANSIT CENTER
300 PINE STREET, PAWTUCKET, RI

REVISIONS

NO	DATE	DESCRIPTION

Designed:	JRM
Drawn:	JRM
Reviewed:	CJA
Project No.:	2301115
Date:	04/09/2024

Issued for:
CONSTRUCTION DOCUMENTS

Title:
TYPICAL FRAMING DETAILS

Sheet No.
S502

4/4/2024 4:24:44 PM C:\Users\jmalary\Documents\REVIT FILES\2023\2301115_RIPTA_PassengerFacility_R23_STR_jmalaryVN7W8.rvt

© 2022 BL COMPANIES, INC. THESE DRAWINGS SHALL NOT BE UTILIZED BY ANY PERSON, FIRM OR CORPORATION WITHOUT THE SPECIFIC WRITTEN PERMISSION OF BL COMPANIES.

ASCE 7-16 COMPONENTS AND CLADDING LOADS - MAIN BUILDING (LRFD)

NOTE: LINEAR INTERPOLATION IS PERMITTED BETWEEN AREA VALUES

POSITIVE WIND PRESSURES ON GLAZING AND WALL COMPONENTS (LRFD) (ULTIMATE - **125 MPH**)						
BUILDING	LOCATION ON BUILDING	POSITIVE PRESSURE	POSITIVE PRESSURE	POSITIVE PRESSURE	POSITIVE PRESSURE	POSITIVE PRESSURE
		=10 FT²	=25 FT²	=100 FT²	=200 FT²	=500 FT²
MAIN	4	**34.1 PSF**	**32.2 PSF**	**29.0 PSF**	**29.0 PSF**	**29.0 PSF**
	5	**34.1 PSF**	**32.2 PSF**	**29.0 PSF**	**29.0 PSF**	**29.0 PSF**

NEGATIVE WIND PRESSURES ON GLAZING AND WALL COMPONENTS (LRFD) (ULTIMATE - **125 MPH**)						
BUILDING	LOCATION ON BUILDING	NEGATIVE PRESSURE	NEGATIVE PRESSURE	NEGATIVE PRESSURE	NEGATIVE PRESSURE	NEGATIVE PRESSURE
		=10 FT²	=25 FT²	=100 FT²	=200 FT²	=500 FT²
MAIN	4	**-37.0 PSF**	**-35.1 PSF**	**-31.8 PSF**	**-31.8 PSF**	**-31.8 PSF**
	5	**-45.6 PSF**	**-41.9 PSF**	**-35.4 PSF**	**-35.4 PSF**	**-35.4 PSF**

ROOF WIND UPLIFT PRESSURES (LRFD) (ULTIMATE - **125 MPH**)						
BUILDING	LOCATION ON BUILDING	UPLIFT PRESSURE	UPLIFT PRESSURE	UPLIFT PRESSURE	UPLIFT PRESSURE	UPLIFT PRESSURE
		=10 FT²	=25 FT²	=100 FT²	=200 FT²	=500 FT²
MAIN	1	**-54.3 PSF**	**-49.9 PSF**	**-42.4PSF**	**-42.4PSF**	**-42.4PSF**
	1'	**-31.2 PSF**	**-31.2 PSF**	**-31.2 PSF**	**-31.2 PSF**	**-31.2 PSF**
	2	**-71.6 PSF**	**-66.0 PSF**	**-56.3 PSF**	**-56.3 PSF**	**-56.3 PSF**
	3	**-97.6 PSF**	**-86.4 PSF**	**-67.0 PSF**	**-67.0 PSF**	**-67.0 PSF**

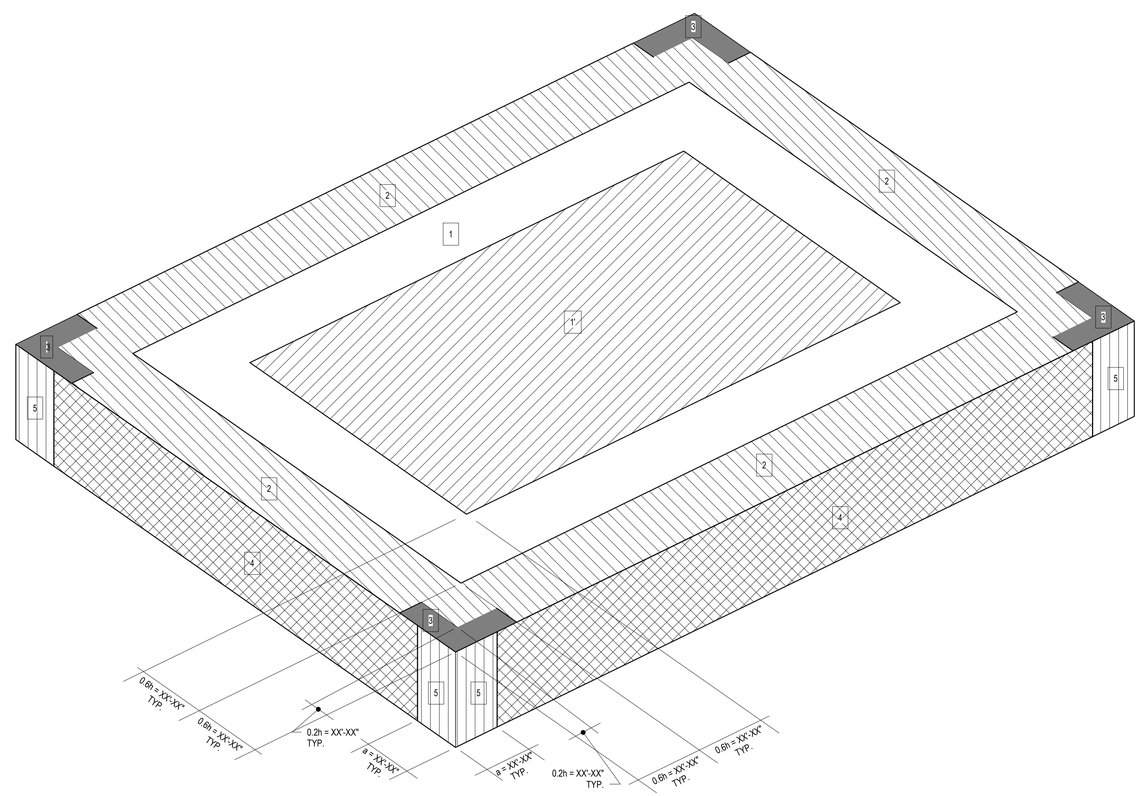

ASCE 7-16 WIND ZONE ISOMETRIC

1 WIND ZONE MAP - ASCE 7-16
1" = 30'-0"

Architecture
Engineering
Environmental
Land Surveying
BL Companies

355 Research Parkway
Meriden, CT 06450
(203) 630-1406
(203) 630-2615 Fax

JOHN MALARY
No. 14423
REGISTERED PROFESSIONAL ENGINEER STRUCTURAL

PAWTUCKET-CENTRAL FALLS TRANSIT CENTER
300 PINE STREET, PAWTUCKET, RI

REVISIONS

NO	DATE	DESCRIPTION

Designed:	JRM
Drawn:	JRM
Reviewed:	CJA
Project No.:	230/1115
Date:	04/09/2024

Issued for:
CONSTRUCTION DOCUMENTS

Title:
COMPONENT AND CLADDING DIAGRAMS

Sheet No.
S601

4/4/2024 4:24:45 PM C:\Users\jmalary\Documents\REVIT FILES\202312301115_RIPTA_PassengerFacility_R23_STR_jmalaryVN7W8.rvt

© 2022 BL COMPANIES, INC. THESE DRAWINGS SHALL NOT BE UTILIZED BY ANY PERSON, FIRM OR CORPORATION WITHOUT THE SPECIFIC WRITTEN PERMISSION OF BL COMPANIES.

STANDARD GRAPHIC LEGEND

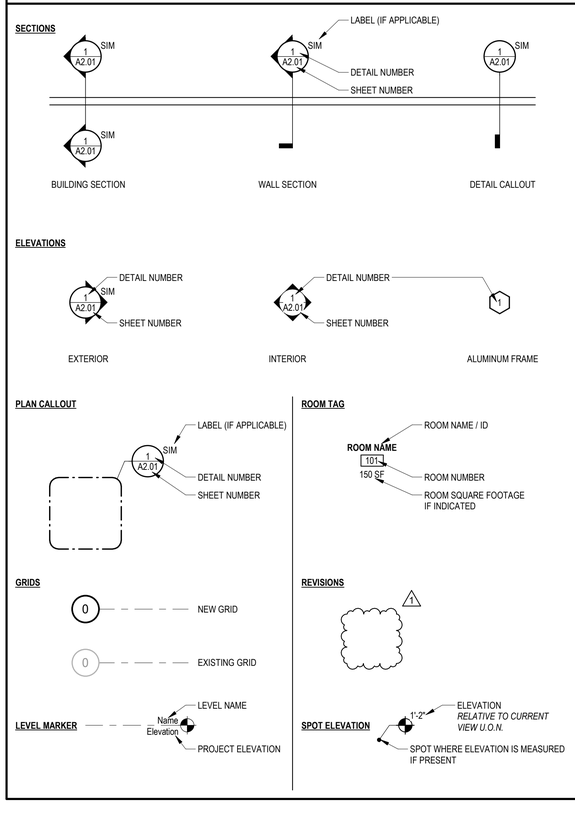

MASTER ABBREVIATION LIST

A.F.F.	ABOVE FINISH FLOOR
AWP	ACOUSTIC WALL PANEL
AC	ACOUSTIC, ACOUSTICAL
ACT	ACOUSTICAL TILE
ADDN	ADDITION
A/C	AIR CONDITIONING
A.H.U.	AIR HANDLING UNIT
ALT	ALTERNATE
ALUM.	ALUMINUM
AB	ANCHOR BOLTS
ANCH	ANCHOR, ANCHORAGE
&	AND
L	ANGLE
ANOD.	ANODIZED
APPR.	APPROVED
ARCH.	ARCHITECT, ARCHITECTURAL
ASB.	ASBESTOS
ASPH.	ASPHALT
ASSY	ASSEMBLY
ASST	ASSISTANT
@	AT
AVN	AT VARIANCE WITH
AUTO.	AUTOMATIC
BM	BEAM
BRG	BEARING
BET.	BETWEEN
BEV.	BEVEL,BEVELED
BIT.	BITUMINOUS
BLK.	BLOCK
BLKG	BLOCKING
BD	BOARD
BOTT.	BOTTOM
B.O.	BOTTOM OF
B.F.	BRACE FRAME
B.E.J.	BRICK EXPANSION JOINT
BLDG.	BUILDING
B.U.R.	BUILT-UP-ROOFING
CAB.	CABINET
C.U.H.	CABINET UNIT HEATER
CAP.	CAPACITY
CLG	CEILING
CLG. HT.	CEILING HEIGHT
CEM.	CEMENT
CTR	CENTER
⌀	CENTERLINE
CPB	CERAMIC PROJECTION BOARD
CER. T.	CERAMIC TILE
C.BD	CHALKBOARD
C	CHANNEL
CL.	CLOSET
C.F.M.F.	COLD FORMED METAL FRAME
COL.	COLUMN
CONC.	CONCRETE
CONF.	CONFERENCE
CONT.	CONTINUOUS
CONTR.	CONTRACTOR
C.J.	CONTROL/CONSTRUCTION JOINT
CORR.	CORRIDOR
CNL	COULD NOT LOCATE
CRS.	COURSE, COURSES
D.H.	DOUBLE HUNG
DMPFG	DAMPPROOFING
DEG.	DEGREE
DEMO.	DEMOLITION
DEPT.	DEPARTMENT
DET.	DETAIL
DIA.	DIAMETER
DIM.	DIMENSION
DIST.	DISTANCE
DR	DOOR
DBL.	DOUBLE
DN	DOWN
D.S.	DOWNSPOUT
DWG	DRAWING
D.F.	DRINKING FOUNTAIN
EA.	EACH
EWC	ELECTRIC WATER COOLER
ELEC.	ELECTRIC, ELECTRICAL
ELEV.	ELEVATION
EL.	ELEVATOR
EMERG.	EMERGENCY
EQ.	EQUAL
EQUIP.	EQUIPMENT
E.P.D.M.	ETHYLENE PROPYLENE DIENE MONOMER
E.F.	EXHAUST FAN
EXIST.	EXISTING
EFB	EXISTING FIRE BLANKET
EFE	EXISTING FIRE EXSTINGUISHER
E.R.D.	EXISTING ROOF DRAIN
E.T.R.	EXISTING TO REMAIN
EVS	EXISTING VENT STACK
EXP.	EXPANSION
E.J.	EXPANSION JOINT
EXT.	EXTERIOR
E.I.	EXTERIOR INSULATION
FT	FEET, FOOT
F.R.G.P.	FIBER REINFORCED GYPSUM PANEL
F.S.	FINISH SYSTEM
FIN.	FINISH, FINISHED
FB	FIRE BLANKET
F.E.	FIRE EXTINGUISHER
F.T.R.	FIRE RETARDANT TREATED
FPRFG.	FIREPROOFING
FIXT.	FIXTURE
FLASH.	FLASHING
FLR	FLOOR
F.D.	FLOOR DRAIN
FLR. FIN.	FLOOR FINISH
FTG	FOOTING
FDN	FOUNDATION
FURN.	FURNISH, FURNISHED
FBO/IBO	FURNISHED BY OWNER/ INSTALLED BY OTHERS
FURR.	FURRED, FURRING
GALV.	GALVANIZED
GA.	GAUGE
G.B.	GRAB BAR
GYP. BD.	GYPSUM WALLBOARD
H.C.	HANDICAPPED
H.R.	HANDRAIL
HGT	HEIGHT
H.P.	HIGH POINT
H.M.	HOLLOW METAL
HORIZ.	HORIZONTAL
H.B.	HOSE BIBB
IN. OR "	INCH OR INCHES
INCL.	INCLUDE, INCLUDING
INFO.	INFORMATION
I.D.	INSIDE DIAMETER
INSUL.	INSULATION
INT.	INTERIOR
K.P.	KICK PLATE
LAB.	LABORATORY
LAV.	LAVATORY
L.C.C.	LEAD COATED COPPER
LTG.	LIGHTING
L.P.	LOW POINT
MACH.	MACHINE
MAINT.	MAINTENANCE
MFR	MANUFACTURER
MBD	MARKER BOARD
MAS.	MASONRY
M.O.	MASONRY OPENING
MATL	MATERIAL
MAX.	MAXIMUM
MECH.	MECHANICAL
MTL	METAL
MEZZ.	MEZZANINE
MIN.	MINIMUM
M.W.F.	MIRROR WITH FRAME
MISC.	MISCELLANEOUS
N	NORTH
N.I.C.	NOT IN CONTRACT
N.T.S.	NOT TO SCALE
NO. OR #	NUMBER
OFF.	OFFICE
OAI	OK AS IS
O.C.	ON CENTER
O.H.	OPPOSITE HAND
O.D.	OUTSIDE DIAMETER
O.R.D. / O.T.D.	OVERFLOW ROOF DRAIN
PTD	PAINTED
PR	PAIR
PTD	PAPER TOWEL DISPENSER
PASS.	PASSAGE
PERP.	PERPENDICULAR
PLAS.	PLASTER
PL. LAM.	PLASTIC LAMINATE
PL	PLATE
PLBG	PLUMBING
PLYWD	PLYWOOD
PVC	POLYVINYL CHLORIDE
P/C	PRECAST
P.E.J.	PRECAST EXPANSION JOINT
PREFAB.	PREFABRICATED
P.T.	PRESSURE TREATED
QTY	QUANTITY
Q.T.	QUARRY TILE
R.P.	RADIANT PANEL
RAD.	RADIUS
R.W.C.	RAIN WATER CONDUCTOR
R.W.L.	RAIN WATER LEADER
RECV.	RECEIVING
REFR.	REFRIGERATOR
REINF.	REINFORCE
R.A.	RELIEVING ANGLE
REQ'D	REQUIRED
REV.	REVISED, REVISION
R.	RISER
RAH	ROOF ACCESS HATCH/SCUTTLE
R.D.	ROOF DRAIN
R.F.	ROOF FAN
R.T.U.	ROOF TOP UNIT
RM	ROOM
RAFL	RUBBERIZED ASPHALT FABRIC LAMINATE
SND	SANITARY NAPKIN DISPENSER
SNR	SANITARY NAPKIN RECEPTICAL
SCHED.	SCHEDULE
SC	SCUPPER
SECT.	SECTION
S.J.	SEISMIC JOINT
SHT	SHEET
SIM.	SIMILAR
S.H.	SMOKE HATCH
SD	SOAP DISPENSER
S.T.C.	SOUND TRANSMISSION CLASS
SPEC.	SPECIFICATIONS
S.B.	SPLASH BLOCK
SQ.	SQUARE
S.F.	SQUARE FEET (FOOT)
S.S.	STAINLESS STEEL
STD	STANDARD
STL	STEEL
STOR.	STORAGE
STRUCT.	STRUCTURAL
SGFT	STRUCTURAL GLAZED FACING TILE
S.STL.	STRUCTURAL STEEL
SUSP.	SUSPEND, SUSPENSION
SGB	SWING UP GRAB BAR
TBD	TACKBOARD
THRU	THROUGH
TPD	TOILET PAPER DISPENSER
T. & G.	TONGUE AND GROOVE
T.O	TOP OF
T.	TREAD
TYP.	TYPICAL
UCR	UNDER COUNTER REFRIGERATOR
UL	UNDERWRITERS' LABORATORIES, INC.
U.H.	UNIT HEATER
U.V.	UNIT VENTILATOR
U.O.N.	UNLESS OTHERWISE NOTED
VTS	VENT STACK
VTR	VENT THROUGH ROOF
VERT.	VERTICAL
VEST.	VESTIBULE
VCT	VINYL COMPOSITION TILE
W.H.	WALL HYDRANT
WPK	WALL PACK
WP	WATERPROOFING
W.W.F.	WELDED WIRE FABRIC
W.BD.	WHITE BOARD
W/	WITH
WD	WOOD
Z.C.C.	ZINC COATED COPPER

Architecture
Engineering
Environmental
Land Surveying
BL Companies
355 Research Parkway
Meriden, CT 06450
(203) 630-1406
(203) 630-2615 Fax

CHRISTEN M. ROBINSON
REGISTERED ARCHITECT

PAWTUCKET-CENTRAL FALLS TRANSIT CENTER
300 PINE STREET PAWTUCKET, RI 02860

REVISIONS

NO	DATE	DESCRIPTION

Designed:	CR
Drawn:	MC
Reviewed:	JJ
Project No.:	230115
Date:	04/09/2024

Issued for:
CONSTRUCTION DOCUMENTS

Title:
GENERAL INFORMATION

Sheet No.
A001

4/9/2024 4:01:40 PM C:\Users\LAndreianu\Documents\2301115_RIPTA_PassengerFacility_R23_Arch_landreianu.rvt

© 2022 BL COMPANIES, INC. THESE DRAWINGS SHALL NOT BE UTILIZED BY ANY PERSON, FIRM OR CORPORATION WITHOUT THE SPECIFIC WRITTEN PERMISSION OF BL COMPANIES.

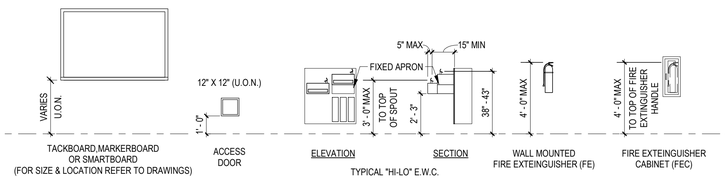

1 GENERAL FIXTURE ELEVATIONS
1/4" = 1'-0"

NOTE: ALL DIMENSIONS INDICATED ARE TO FACE OF FINISH MATERIAL

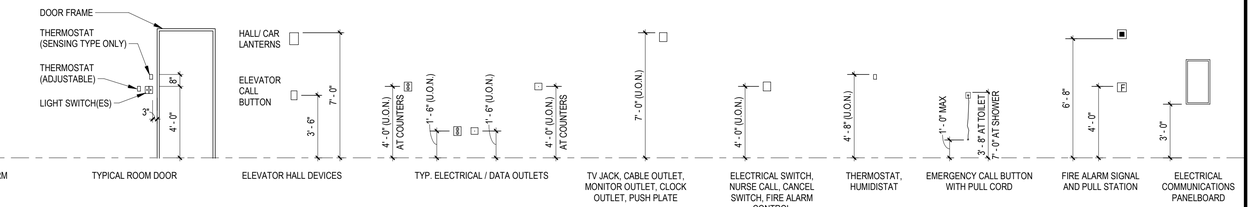

2 ELECTRICAL FIXTURE ELEVATIONS
1/4" = 1'-0"

NOTE: ALL DIMENSIONS INDICATED ARE TO FACE OF FINISH MATERIAL

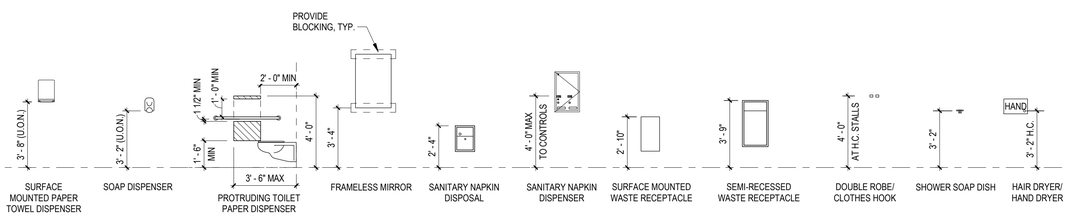

3 RESTROOM FIXTURE ELEVATIONS
1/4" = 1'-0"

NOTE: ALL DIMENSIONS INDICATED ARE TO FACE OF FINISH MATERIAL

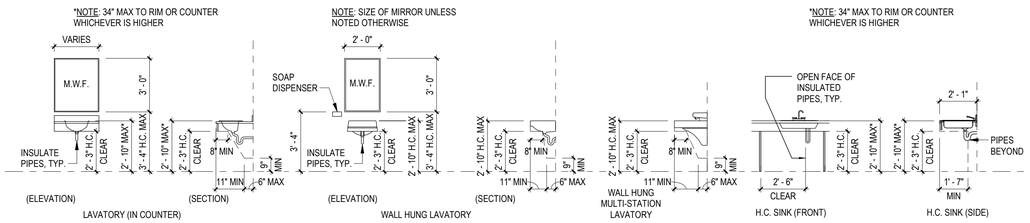

4 TYPICAL LAVATORY ELEVATIONS
1/4" = 1'-0"

NOTE: ALL DIMENSIONS INDICATED ARE TO FACE OF FINISH MATERIAL

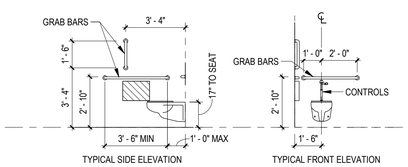

5 TYP. H.C. WATER CLOSET ELEV.
1/4" = 1'-0"

NOTE: INTERIOR DEPTH OF TOILET STALLS SHALL BE 5'-0" MIN CLEAR.

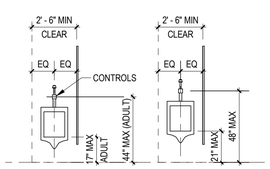

6 URINAL STALL ELEV.
1/4" = 1'-0"

NOTE: ALL DIMENSIONS INDICATED ARE TO FACE OF FINISH MATERIAL

1. COORDINATE HEIGHT OF WATER CLOSET FLUSHOMETER WITH MOUNTING HEIGHT OF REAR GRAB BAR TO PROVIDE CLEARANCE FOR SERVICING OF VALVES WITHOUT REQUIRING REMOVAL OF GRAB BAR.

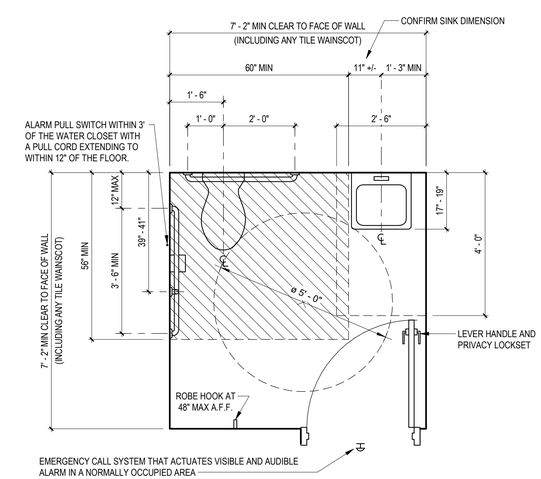

2 ACCESSIBLE TOILET CLEARANCE PLAN
1/2" = 1'-0"

Architecture
Engineering
Environmental
Land Surveying
Companies

355 Research Parkway
Meriden, CT 06450
(203) 630-1406
(203) 630-2615 Fax

CHRISTEN M. ROBINS
REGISTERED ARCHITECT

PAWTUCKET-CENTRAL FALLS TRANSIT CENTER
300 PINE STREET PAWTUCKET, RI 02860

REVISIONS

NO	DATE	DESCRIPTION

Designed:	CR
Drawn:	MC
Reviewed:	JJ
Project No.:	230115
Date:	04/09/2024

Issued for:
CONSTRUCTION DOCUMENTS

Title:
TYPICAL MOUNTING HEIGHTS

Sheet No.
A002

4/9/2024 4:01:41 PM C:\Users\LAndreianu\Documents\2301115_RIPTA_PassengerFacility_R23_Arch_landreianu.rvt

© 2022 BL COMPANIES, INC. THESE DRAWINGS SHALL NOT BE UTILIZED BY ANY PERSON, FIRM OR CORPORATION WITHOUT THE SPECIFIC WRITTEN PERMISSION OF BL COMPANIES.

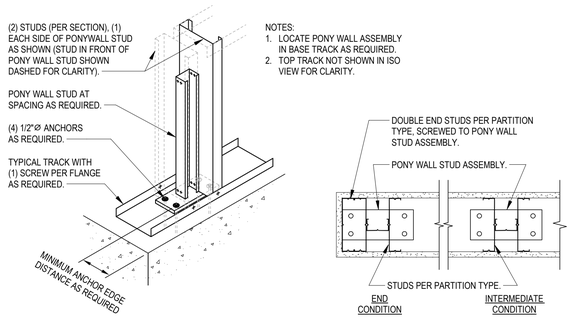

NOTES:
1. LOCATE PONY WALL ASSEMBLY IN BASE TRACK AS REQUIRED.
2. TOP TRACK NOT SHOWN IN ISO VIEW FOR CLARITY.

ISOMETRIC VIEW

PLAN VIEW

6 LOW WALL BRACING DETAIL
1 1/2" = 1'-0"

LINTEL SCHEDULE - NEW CONSTRUCTION

1. PROVIDE LINTELS, WHETHER INDICATED OR NOT OVER ALL NEW OPENINGS, OR EXISTING OPENINGS THAT HAVE BEEN MODIFIED, IN EXISTING MASONRY WALLS AS REQUIRED BY STRUCTURAL, ARCHITECTURAL, MECHANICAL, PLUMBING AND ELECTRICAL DRAWINGS.
2. COMBINE VARIOUS WYTHES OF MASONRY AS REQUIRED TO SUIT PROJECT.
3. ALL CONDITIONS MAY NOT OCCUR.
4. ALL LINTELS ARE TO HAVE 8" MINIMUM BEARING AT EACH END.
5. ALL EXTERIOR LINTELS ARE TO BE GALVANIZED.
6. ALL EXTERIOR ANGLES TO BE LOCATED 1/2" BACK FROM FACE OF FINISHED WALL.
7. SEE STRUCTURAL DRAWINGS FOR ALL OPENINGS OVER 6'-4"

MASONRY OPENING	4" MASONRY	6" MASONRY	8" MASONRY	10" MASONRY	12" MASONRY	TYPICAL INFORMATION
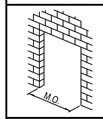	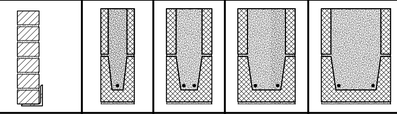					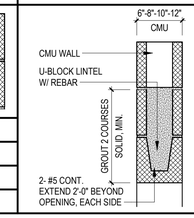
UP TO 5'-0"	1L - 3 1/2" X 3 1/2" X 5/16"	BOND BEAM	BOND BEAM	BOND BEAM	BOND BEAM	
5'-0" TO 6'-0"	1L - 6" X 3 1/2" X 5/16"	BOND BEAM	BOND BEAM	BOND BEAM	BOND BEAM	
6'-0" TO 7'-4"	1L - 6" X 3 1/2" X 5/16"	BOND BEAM	BOND BEAM	BOND BEAM	BOND BEAM	
7'-4" TO 8'-4"	1L - 6" X 3 1/2" X 3/8"	BOND BEAM	BOND BEAM	BOND BEAM	BOND BEAM	

PARTITION GENERAL NOTES

1. ALL PARTITIONS DESIGNATED TO BE TERMINATED AT UNDERSIDE OF DECK OR STRUCTURE ABOVE SHALL BE CONTINUOUS WITH NO VOIDS OR GAPS. WALL CONSTRUCTION SHALL BE SCRIBED AROUND INTERSECTING FRAMING, STEEL SHAPES, METAL DECK FLUTES, AND ALL EQUIPMENT TO CREATE A COMPLETE AND CONTINUOUS FLUSH SYSTEM WITH NO GAPS OR VOIDS. AT NON-RATED CONSTRUCTION ALL JOINTS BETWEEN WALL CONSTRUCTION AND OTHER MATERIALS AND OBJECTS SHALL BE SEALED WITH ACOUSTICAL SEALANT.
2. WALL TYPES LISTED REPRESENT SEVERAL TYPES OF WALL CONSTRUCTION, ALL OF WHICH MAY NOT BE USED ON THIS PROJECT. REFER TO FLOOR PLANS FOR WALL TYPE DESIGNATIONS.
3. EXTEND ALL METAL STUDS AND GYPSUM BOARD TO UNDERSIDE OF DECK. WHERE FIBER REINFORCED GYPSUM PANELS (F.R.G.P.) ARE USED, EXTEND F.R.G.P. TO A MINIMUM OF 6" ABOVE FINISH CEILING, CONTINUE WITH GYPSUM BOARD TO UNDERSIDE OF DECK.
4. AT ALL NON-FIRE RATED PARTITIONS, FILL VOIDS WITH BATT INSULATION INCLUDING. BUT NOT LIMITED TO, FLUTES IN METAL FLOOR/ROOF DECK, PENETRATIONS OF DUCTWORK, ELECTRICAL CONDUIT, PIPING, ETC.
5. TYPE X GYPSUM BOARD AND TYPE FRX F.R.G.P. USED IN A ONE, TWO, OR THREE HOUR FIRE RATED PARTITION MUST BEAR THE U.L. CLASSIFICATION MARKING.

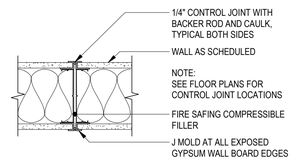

5 GYP BOARD CONTROL JOINT
1 1/2" = 1'-0"

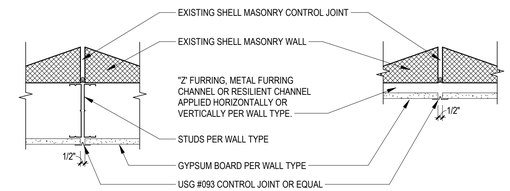

PLAN DETAIL (NON-RATED WALL)

PLAN DETAIL (NON-RATED WALL)

3 CONTROL JOINT DETAILS @ FURRED WALLS
1 1/2" = 1'-0"

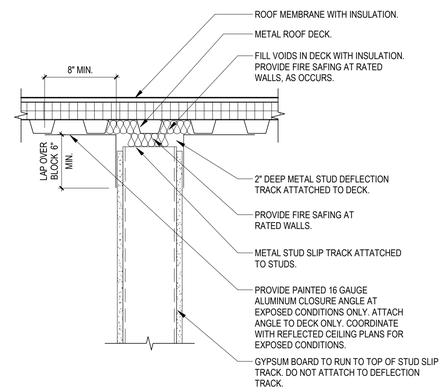

4 DEFLECTION TRACK STUD TO ROOF
1 1/2" = 1'-0"

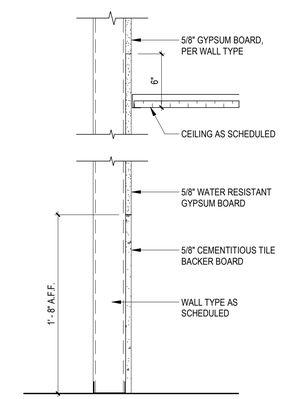

9 WET AREA DETAIL
1 1/2" = 1'-0"

PARTITION TYPE TAG

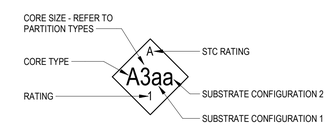

CORE TYPES

A	METAL STUD FRAMING / METAL FURRING
B	DOUBLE METAL STUD
C	STAGGERED METAL STUD
M	CONCRETE MASONRY UNIT
S	METAL SHAFT WALL CH STUD
T	TILT-UP CONCRETE
W	WOOD STUD FRAMING / WOOD FURRING
X	DOUBLE WOOD STUD FRAMING
Y	STAGGERED WOOD STUD FRAMING

SUBSTRATE CONFIGURATIONS

(none) CORE ONLY

a. 5/8" GYPSUM WALL BOARD (1 LAYER)
b. 5/8" GYPSUM WALL BOARD (2 LAYERS)
c. 5/8" GYPSUM WALL BOARD (3 LAYERS)
d. 5/8" GYPSUM WALL BOARD (4 LAYERS)
e. 1/2" PLYWOOD (1 LAYER)
f. 1/2" PLYWOOD, 5/8" GYPSUM WALL BOARD (1 IAYER)
g. 5/8" CEMENT BOARD (1 LAYER)
s. 1" SHAFT LINER

TOP OF WALL CONDITION

SEE DETAIL 4/A021 OR DETAILS A501 FOR ADDITIONAL CONDITIONS

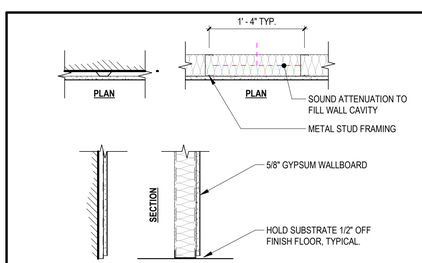

TAG	STUD SIZE	OVERALL WIDTH	UL DESIGN	STC RATING
A0a	7/8"	1 1/2"	NR	NR
A2a	2 1/2"	3 1/8"	NR	NR
A3a	3 5/8"	4 1/4"	NR	NR

14 A021 PARTITION TYPE - A_a 1" = 1'-0"

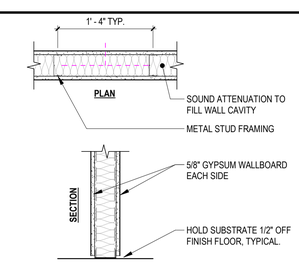

TAG	STUD SIZE	OVERALL WIDTH	UL DESIGN	STC RATING
A3aa	3 5/8"	4 7/8"	NR	47
A6aa	6"	7 1/4"	NR	47

ENSURE CONTINUITY OF WALLS INDICATED AS ACOUTIC (A) PROVIDE APPROPRIATE STC FOR SPACES THEY ARE SEPARATING.

2 A021 PARTITION TYPE - A_aa 1" = 1'-0"

1 A021 PARTITION KEY NTS

Architecture Engineering Environmental Land Surveying
BL Companies
355 Research Parkway
Meriden, CT 06450
(203) 630-1406
(203) 630-2615 Fax

CHRISTEN M. ROBINSO
REGISTERED ARCHITECT

PAWTUCKET-CENTRAL FALLS TRANSIT CENTER
300 PINE STREET PAWTUCKET, RI 02860

REVISIONS

NO	DATE	DESCRIPTION

Designed:	CR
Drawn:	MC
Reviewed:	JJ
Project No.:	230115
Date:	04/09/2024

Issued for: CONSTRUCTION DOCUMENTS

Title: PARTITION TYPES

Sheet No. A021

4/9/2024 4:01:42 PM C:\Users\LAndreianu\Documents\2301115_RIPTA_PassengerFacility_R23_Arch_landreianu.rvt

© 2022 BL COMPANIES, INC. THESE DRAWINGS SHALL NOT BE UTILIZED BY ANY PERSON, FIRM OR CORPORATION WITHOUT THE SPECIFIC WRITTEN PERMISSION OF BL COMPANIES.

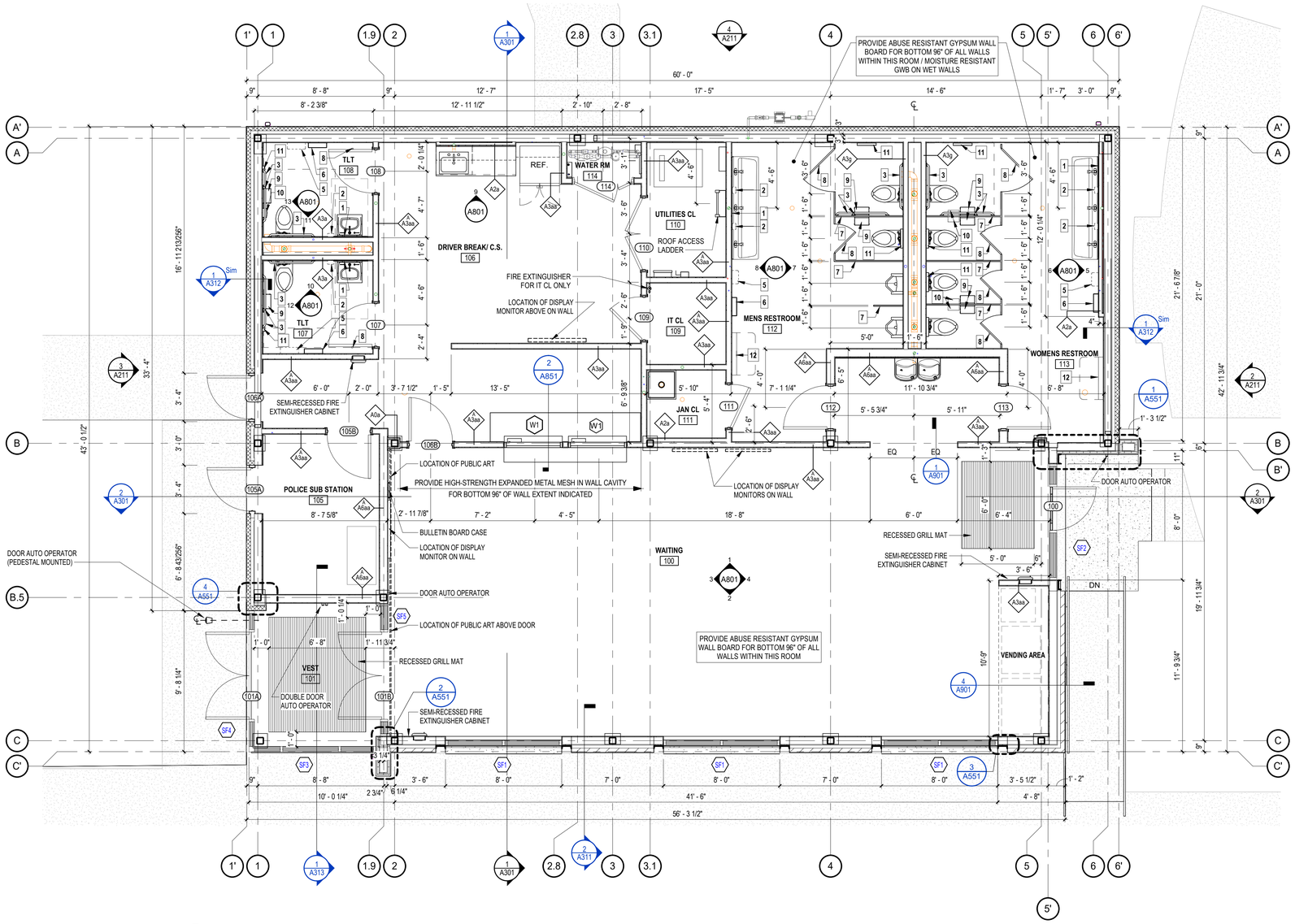

1 FLOOR PLAN
1/4" = 1'-0"

FLOOR PLAN GENERAL NOTES

1. REFER TO DRAWING A001 FOR TYPICAL ABBREVIATIONS AND TYPICAL GRAPHIC LEGEND
2. REFER TO DRAWING A002 FOR ACCESSIBILITY REQUIREMENTS, TOILET ACCESSORIES AND WALL MTD SPECIALTY EQUIPMENT
3. REFER TO DRAWING A021 FOR INTERIOR PARTITION SCHEDULE
4. REFER TO CODE ANALYSIS AND EGRESS PLANS FOR LOCATION OF FIRE AND SMOKE SAFETY RATED PARTITIONS
5. REFER TO DRAWING A601 FOR DOOR AND FRAME INFORMATION
6. REFER TO DRAWING SERIES A800 FOR FINISH SCHEDULE AND ADDITIONAL FINISH INFORMATION
7. REFER TO ENLARGE PLANS FOR ADDITIONAL DIMENSIONS
8. ALL DIMENSIONS ARE TO FACE OF MASONRY, FACE OF METAL STUD, AND TO THE CENTERLINE OF COLUMN, UNLESS NOTED OTHERWISE.
9. ALL DOORS SHALL BE LOCATED WITH HINGE SIDE OF FRAME 4" OFF FINISHED WALL, (AT CORNER CONDITION), UNLESS OTHERWISE NOTED.
10. ALL EXTERIOR DOORS SHALL BE FULLY WEATHER STRIPPED.
11. PROVIDE FLOOR TRANSITION STRIPS AT ALL FLOOR FINISH CHANGES REFER TO FINISH DRAWINGS FOR DETAILS
12. PROVIDE FIRE RETARDANT TREATED WOOD BLOCKING OR STEEL FLAT STRAP AND BACKING PLATE AT ALL TOILET ACCESSORIES, CASEWORK, MILLWORK AND ALL OTHER WALL MOUNTED EQUIPMENT AND DEVICES.

CONSTRUCTION LEGEND

- NEW WALL
- NEW DOOR
- 11 WINDOW TAG
- 101A DOOR TAG
- A 11 PARTITION TAG

TOILET ACCESSORIES

TAG	ITEM	MANUFACTURER	MODEL #
1	MIRROR	BOBRICK	B-290 SERIES
2	LIQUID-SOAP DISPENSER	FBO/IBO	
3	GRAB BAR (HORIZONTAL 36", 42", VERTICAL 18")	BOBRICK	B-6806.99
4	MOP AND BROOM HOLDER	BOBRICK	B-223
5	PAPER TOWEL DISPENSER	FBO/IBO	
6	RECESSED WASTE RECEPTACLE	BOBRICK	B-3644
7	COMPARTMENT STALL & URINAL SCREEN	BOBRICK	
8	COAT HOOK	BOBRICK	B-542
9	TOILET PAPER DISPENSER	BOBRICK	B-2888
10	SANITARY NAPKIN DISPOSAL	BOBRICK	B-270
11	SURFACE MOUNTED SEAT-COVER DISPENSER	BOBRICK	B-221
12	CHANGING STATION	KOALA KARE	KB300

TRUE NORTH

Architecture Engineering Environmental Land Surveying
BL Companies
355 Research Parkway
Meriden, CT 06450
(203) 630-1406
(203) 630-2615 Fax

CHRISTEN M. ROBINS REGISTERED ARCHITECT

PAWTUCKET-CENTRAL FALLS TRANSIT CENTER
300 PINE STREET PAWTUCKET, RI 02860

REVISIONS

NO	DATE	DESCRIPTION

Designed:	CR
Drawn:	MC, LA
Reviewed:	JJ
Project No.:	230115
Date:	04/09/2024
Issued for:	CONSTRUCTION DOCUMENTS

Title: FLOOR PLAN

Sheet No. A101

4/9/2024 4:01:45 PM C:\Users\LAndreianu\Documents\2301115_RIPTA_PassengerFacility_R23_Arch_landreianu.rvt

© 2022 BL COMPANIES, INC. THESE DRAWINGS SHALL NOT BE UTILIZED BY ANY PERSON, FIRM OR CORPORATION WITHOUT THE SPECIFIC WRITTEN PERMISSION OF BL COMPANIES.

1 REFLECTED CEILING PLAN
1/4" = 1'-0"

CEILING PLAN GENERAL NOTES

1. "EXP" OR "EXPOSED" CEILING INDICATES THE STRUCTURE AND ANY MEP ELEMENTS IN THIS SPACE ARE TO BE EXPOSED AND PAINTED TO CREATE A FINISHED SPACE
2. REFLECTED CEILING PLANS ARE INTENDED FOR COORDINATION PURPOSES FOR MECHANICAL, ELECTRICAL, FIRE PROTECTION, AND ARCHITECTURAL ELEMENTS. REFER TO RESPECTIVE DRAWINGS FOR SPECIFIC REQUIREMENTS.
3. LIGHT FIXTURE SYMBOLS ON REFLECTED CEILING PLANS ARE DIAGRAMMATIC AND FOR REFERENCE ONLY. REFER TO ELECTRICAL DRAWINGS FOR TYPE OF LIGHT FIXTURES. ELECTRICAL CONTRACTOR IS RESPONSIBLE FOR QUANTITY OF LIGHT FIXTURES AS INDICATED ON ELECTRICAL DRAWINGS.
4. REFER TO FIRE PROTECTION DRAWINGS FOR ADDITIONAL REQUIREMENTS FOR LOCATION OF SPRINKLER PIPING AND ADDITIONAL SPRINKLER HEADS. ALL SPRINKLER PIPING SHALL BE LOCATED ABOVE FINISHED CEILING UNLESS NOTED OTHERWISE. ADVISE ARCHITECT OF ANY CONFLICTS WHICH MUST BE RESOLVED PRIOR TO INSTALLATION.
5. ANY CEILING MOUNTED DEVICES INSTALLED ON A PANELIZED CEILING SHALL BE CENTERED ON PANELS OR GRIDS UNLESS OTHERWISE NOTED.
6. SEE A901 FOR CEILING AND SOFFIT DETAILS
7. FOR REGISTER AND DIFFUSER SCHEDULES, REFER TO MECHANICAL DRAWINGS.
8. CONTRACTOR TO LOCATE MEP AND AV/IT COMPONENTS THAT REQUIRE SERVICING INTO ACCESSIBLE CEILING AREAS TO THE GREATEST EXTENT POSSIBLE.
9. COORDINATE ACCESS PANEL LOCATIONS WITH MECHANICAL TRADES; SUBMIT PROPOSED LOCATIONS TO ARCHITECT FOR APPROVAL.
10. SEE SPECIFICATIONS FOR INFORMATION ON SEISMIC RESTRAINT OF CEILING SYSTEMS

CEILING LEGEND

EXISTING WALL

NEW WALL

CEILING TAG

11 — CEILING TYPE DESIGNATION

1' - 0" — CEILING HEIGHT *SEE SECTION IF SLOPED*

CEILING DESIGNATIONS

EXP EXPOSED
C1a PAINTED GWB (WHITE)
C1b PAINTED GWB (OTHER)
C2 ACOUSTIC CEILING TILE (24 X 24)
C3 ACOUSTIC CEILING TILE (24 X 48)
C4 NOT USED

2'X2' ACOUSTICAL CEILING TILE

GYPSUM BOARD CEILING

LINEAR CEILING PANELS

UNPAINTED EXPOSED STRUCTURE

TRUE NORTH

Architecture
Engineering
Environmental
Land Surveying
Companies

355 Research Parkway
Meriden, CT 06450
(203) 630-1406
(203) 630-2615 Fax

CHRISTEN M. ROBINSON
REGISTERED ARCHITECT

PAWTUCKET-CENTRAL FALLS TRANSIT CENTER
300 PINE STREET PAWTUCKET , RI 02860

REVISIONS

NO	DATE	DESCRIPTION

Designed:	CR
Drawn:	CM, LA
Reviewed:	JJ
Project No.:	230115
Date:	04/09/2024

Issued for:
CONSTRUCTION DOCUMENTS

Title:
REFLECTED CEILING PLAN

Sheet No.
A102

4/9/2024 4:01:46 PM C:\Users\LAndreianu\Documents\2301115_RIPTA_PassengerFacility_R23_Arch_landreianu.rvt

© 2022 BL COMPANIES, INC. THESE DRAWINGS SHALL NOT BE UTILIZED BY ANY PERSON, FIRM OR CORPORATION WITHOUT THE SPECIFIC WRITTEN PERMISSION OF BL COMPANIES.

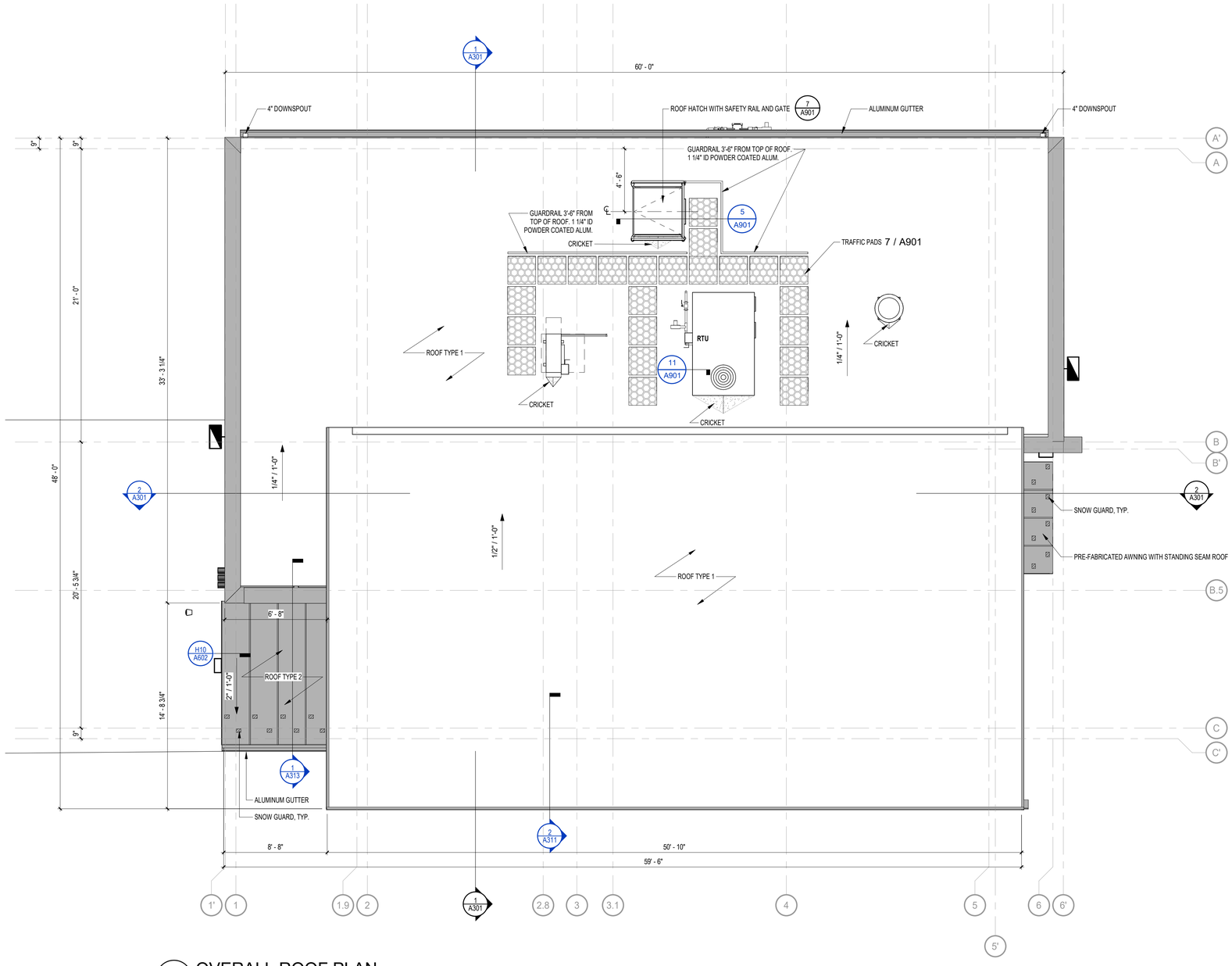

1 OVERALL ROOF PLAN
1/4" = 1'-0"

ROOF PLAN GENERAL NOTES

1. 1. ALL NOTES AND DIMENSIONS DESIGNATED AS TYPICAL APPLY TO ALL LIKE OR SIMILAR CONDITIONS THROUGHOUT THE PROJECT.
2. CONTRACTOR IS TO SURVEY THE ROOF DECKS TO VERIFY THAT THE SLOPES INDICATED ON PLANS ARE ACCURATE. NOTIFY ARCHITECT IMMEDIATELY OF ANY DISCREPANCIES PRIOR TO PERFORMING ANY ADDITIONAL ROOFING OPERATIONS.
3. CONTRACTOR TO FIELD VERIFY QUANTITY AND LOCATION OF PLUMBING VENTS & FLASH IN ACCORDANCE W/ MANUFACTURERS SPECIFICATIONS.
4. CONTRACTOR TO FIELD VERIFY LOCATIONS OF ROOF CONDUITS & CABLES, FLASH PENETRATIONS AS REQUIRED.
5. CONTRACTOR SHALL PROVIDE CONT. PERIMETER BLKG. TO ALIGN WITH HIGH POINT OF INSUL. AT ALL LOCATIONS W/O PARAPETS (TYP).
6. STRUCTURAL INFORMATION ON ROOF DETAILS ARE DIAGRAMMATIC ONLY. SEE STRUCTURAL DRAWINGS FOR EXACT LOCATION, SIZE DIMENSION, MATERIAL AND ARRANGEMENT OF BUILDING COMPONENTS (TYP).
7. ALL ROOF TOP DUCT WORK MUST PROVIDE 18" MIN. CLEAR BETWEEN BOTTOM OF STEEL AND ROOF MEMBRANE.
8. SIZE AND LOCATION OF EXHAUST FANS, MECH. UNITS, VENT STACKS AND OTHER ROOF PENETRATIONS OF ROOF MOUNTED ITEMS ARE TO BE DESIGNED AND COORDINATED WITH STRUCTURE AND ARCHITECTURE
9. NO EQUIPMENT REQUIRING SERVICING SHALL BE LOCATED WITHIN 10'-0" OF ROOF EDGE (TYP) UNLESS OTHER WISE NOTED.
10. WOOD NAILERS SHALL BE SECURELY ANCHORED TO METAL DECK TO RESIST A FORCE OF 300 POUNDS PER LINEAR FOOT IN ANY DIRECTION (TYP).
11. STAGGER BLOCKING JOINTS A MINIMUM OF 12" (TYP).
12. STAGGER JOINTS BETWEEN LAYERS OF INSULATION (TYP).
13. PROVIDE CRICKET ON HIGH SIDE OF ALL ROOF TOP EQUIPMENT AND CURBS
14. ALL VERTICAL FLASHING MUST EXTEND ABOVE ROOF PLAN A MINIMUM OF 8".

ROOF LEGEND

REF TO A901 FOR TYPICAL ROOF DETAILS

CRICKETS WITH 1/4" PER FT

ROOF TRAFFIC PADS

1/4" / 1'-0" DOWN SLOPE OF ROOF

ROOF CONSTRUCTION TYPES

ROOF CONSTRUCTION TYPE 1:
- FULLY ADHERED SINGLE-PLY 60 MIL T.P.O. ROOF MEMBRANE ON
- 5.25" (R-30) MINIMUM RIGID ISO INSULATION ON
- AIR & VAPOR BARRIER
- 1/4" OR 1/2" PER FOOT (MIN.) SLOPED METAL DECK

ROOF CONSTRUCTION TYPE 2:
- STANDING SEAM METAL ROOF ON
- 5.25" (R-30) MINIMUM RIGID ISO INSULATION ON
- AIR & VAPOR BARRIER
- 2" PER FOOT (MIN.) SLOPED METAL DECK

TRUE NORTH

Architecture
Engineering
Environmental
Land Surveying
BL Companies
355 Research Parkway
Meriden, CT 06450
(203) 630-1406
(203) 630-2615 Fax

CHRISTEN M. ROBBINS
REGISTERED ARCHITECT

PAWTUCKET-CENTRAL FALLS TRANSIT CENTER
300 PINE STREET PAWTUCKET, RI 02860

REVISIONS

NO	DATE	DESCRIPTION

Designed:	CR
Drawn:	CM, LA
Reviewed:	JJ
Project No.:	230115
Date:	04/09/2024

Issued for:
CONSTRUCTION DOCUMENTS

Title:
OVERALL ROOF PLAN

Sheet No.
A103

4/10/2024 2:58:43 PM C:\Users\LAndreianu\Documents\23011115_RIPTA_PassengerFacility_R23_Arch_landreianu.rvt

© 2022 BL COMPANIES, INC. THESE DRAWINGS SHALL NOT BE UTILIZED BY ANY PERSON, FIRM OR CORPORATION WITHOUT THE SPECIFIC WRITTEN PERMISSION OF BL COMPANIES.

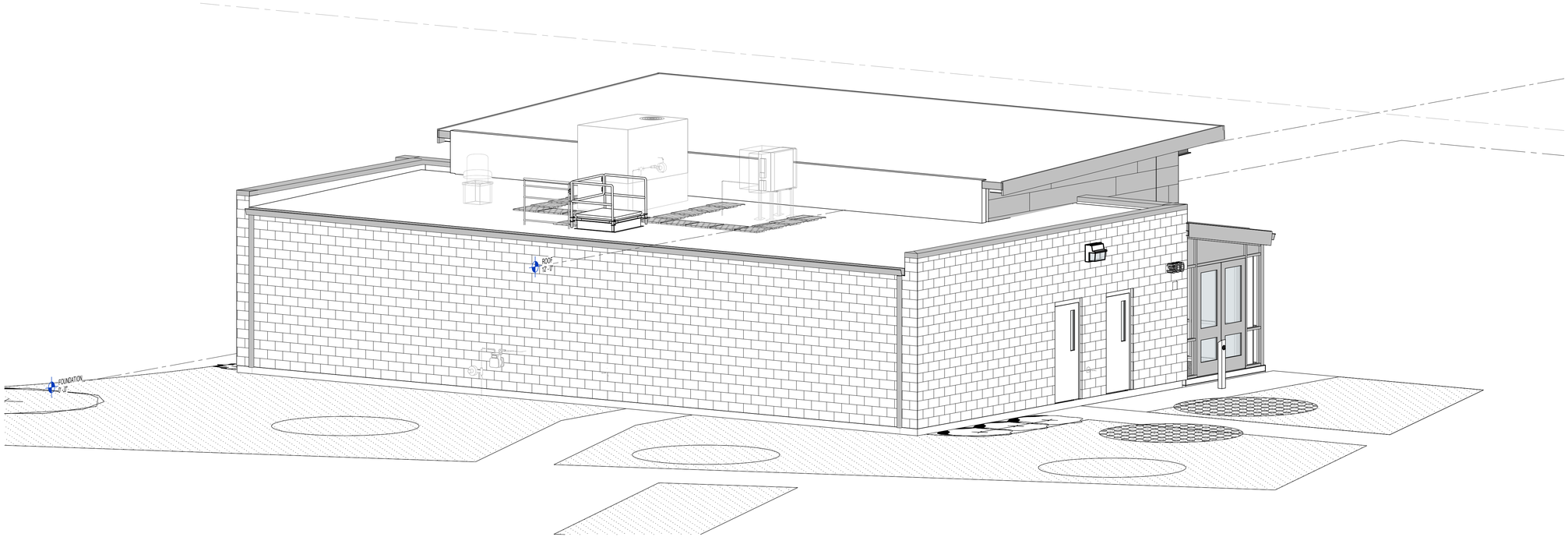

2 AERIAL - NW CORNER

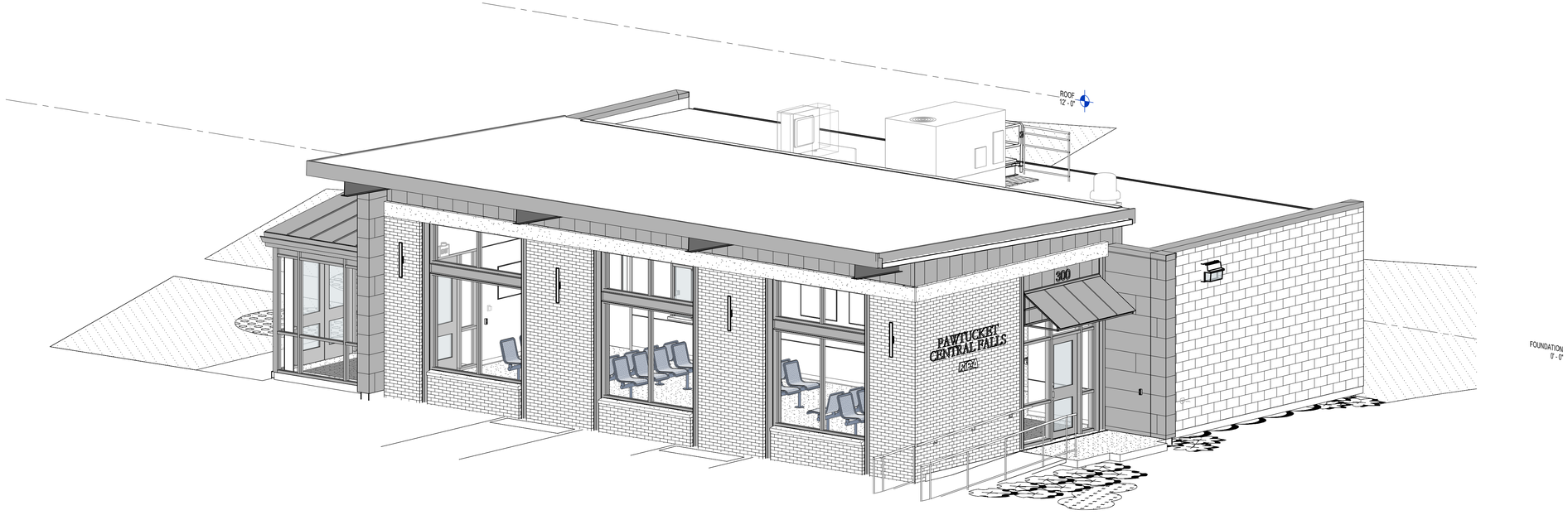

1 AERIAL - SE CORNER

TRUE NORTH

Architecture
Engineering
Environmental
Land Surveying
BL Companies

355 Research Parkway
Meriden, CT 06450
(203) 630-1406
(203) 630-2615 Fax

CHRISTEN M. ROBBINS
No. 3825
REGISTERED ARCHITECT

PAWTUCKET-CENTRAL FALLS TRANSIT CENTER

300 PINE STREET PAWTUCKET, RI 02860

REVISIONS

NO	DATE	DESCRIPTION

Designed:	CR
Drawn:	CM
Reviewed:	JJ
Project No.:	230115
Date:	04/09/2024

Issued for:
CONSTRUCTION DOCUMENTS

Title:
3D AERIALS

Sheet No.
A201

4/9/2024 4:01:50 PM C:\Users\LAndreianu\Documents\2301115_RIPTA_PassengerFacility_R23_Arch_landreianu.rvt

© 2022 BL COMPANIES, INC. THESE DRAWINGS SHALL NOT BE UTILIZED BY ANY PERSON, FIRM OR CORPORATION WITHOUT THE SPECIFIC WRITTEN PERMISSION OF BL COMPANIES.

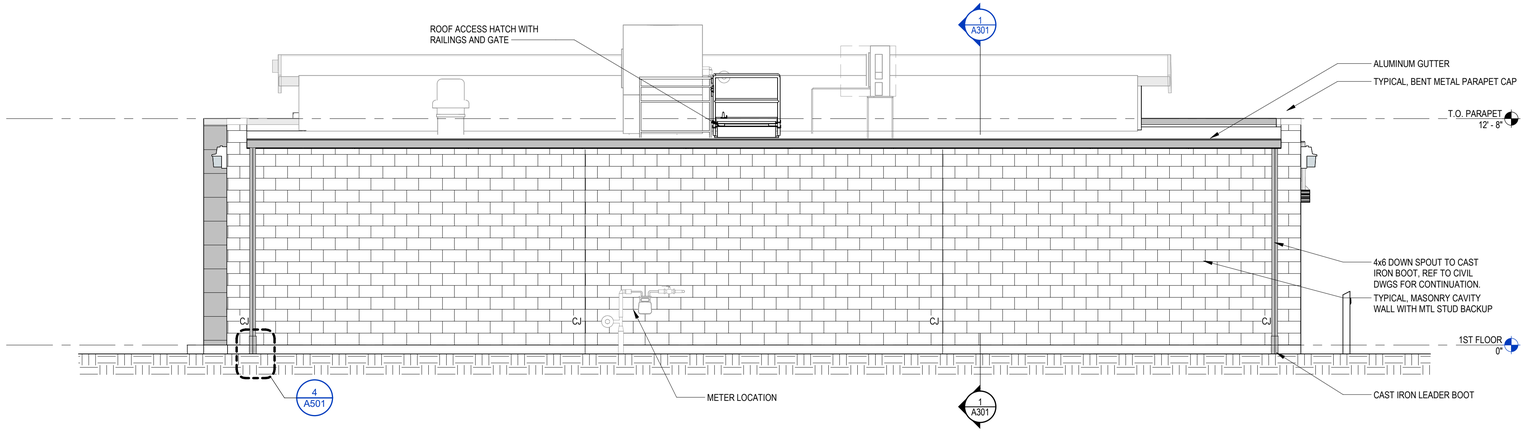

4 EXTERIOR ELEVATION - NORTH

1/4" = 1'-0"

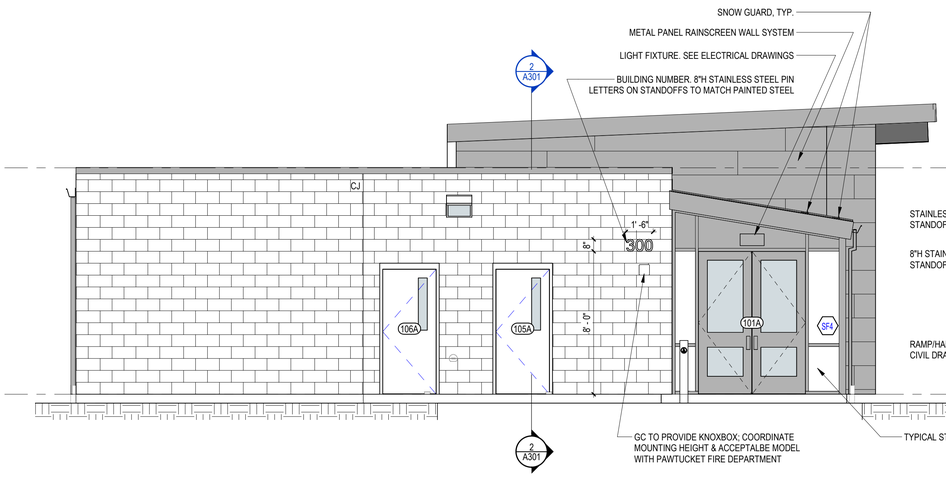

3 EXTERIOR ELEVATION - WEST

1/4" = 1'-0"

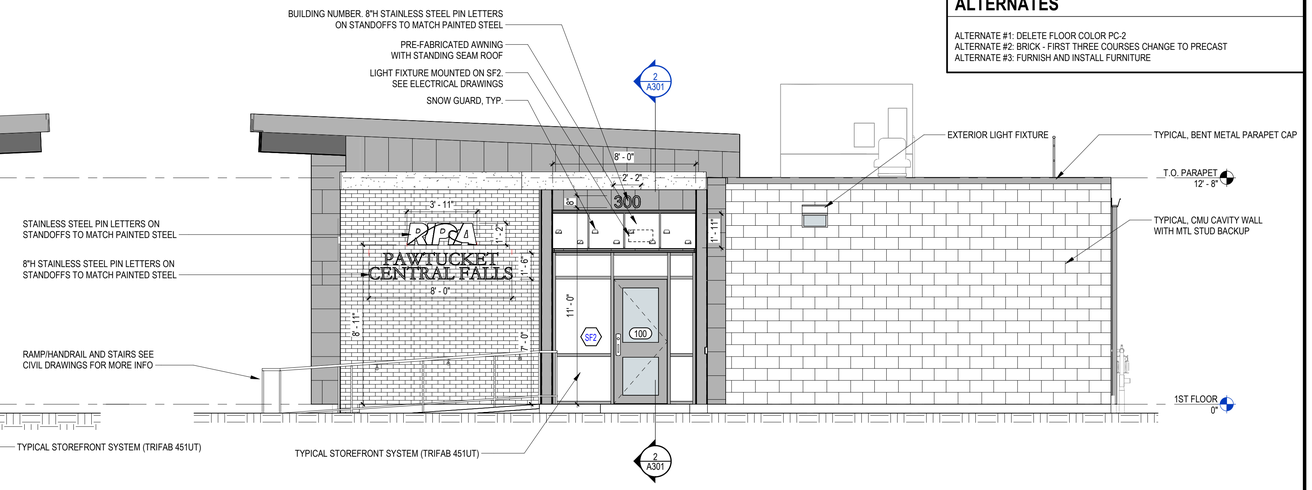

2 EXTERIOR ELEVATION - EAST

1/4" = 1'-0"

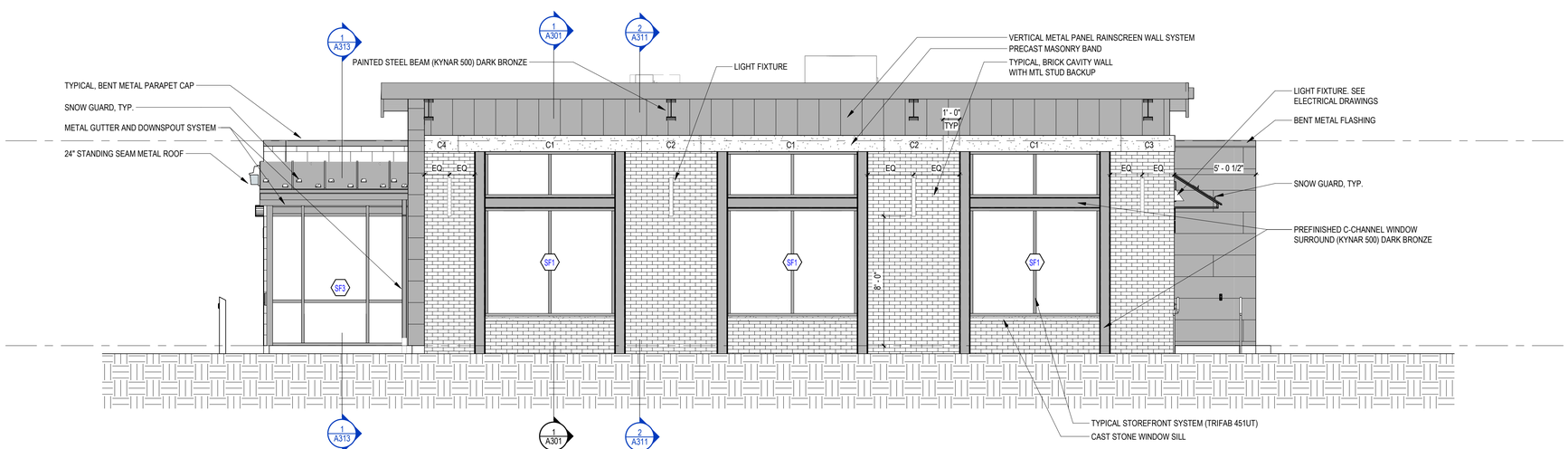

1 EXTERIOR ELEVATION - SOUTH

1/4" = 1'-0"

EXTERIOR ELEVATION GENERAL NOTES

1. ALL EXTERIOR DOORS SHALL BE FULLY WEATHERPROOFED.
2. REFER TO A8 SERIES DRAWINGS FOR DOOR, WINDOW AND STOREFRONT INFORMATION.
3. PROVIDE MASONRY VENEER EXPANSION JOINTS (MVEJ) @ 25'-0" MAX. O.C.. CONTROL JOINTS TO BE FILLED WITH MORTAR MATCHING SEALANT, BACKER ROD AND COMPRESSIBLE FILLER. SEE ELEVATIONS FOR MVEJ LOCATIONS. CONSULT ARCHITECT BEFORE ADDING OR MOVING LOCATION OF ANY MVEJ. CONSULT ARCHITECT FOR ANY CONDITION EXCEEDING 25'-0" OR EXCEEDING 10'-0" FROM CORNERS.
4. PROVIDE SOFT JOINTS AT ALL INSIDE CORNER WHERE BRICK MAY HAVE DIFFERENTIAL DEFLECTION.

EXTERIOR ELEVATION LEGEND

CJ — CONTROL JOINT

1t — WINDOW TAG

MATERIALS

- BRICK VENEER
- GLASS
- BLOCK VENEER
- PAINTED METAL
- RAINSCREEN PANEL
- CAST STONE PIECES

ALTERNATES

ALTERNATE #1: DELETE FLOOR COLOR PC-2
ALTERNATE #2: BRICK - FIRST THREE COURSES CHANGE TO PRECAST
ALTERNATE #3: FURNISH AND INSTALL FURNITURE

Architecture Engineering Environmental Land Surveying
BL Companies
355 Research Parkway
Meriden, CT 06450
(203) 630-1406
(203) 630-2615 Fax

CHRISTEN M. ROBINSON REGISTERED ARCHITECT

PAWTUCKET-CENTRAL FALLS TRANSIT CENTER
300 PINE STREET PAWTUCKET, RI 02860

REVISIONS

NO	DATE	DESCRIPTION

Designed:	CR
Drawn:	MC
Reviewed:	JJ
Project No.:	230115
Date:	04/09/2024

Issued for:
CONSTRUCTION DOCUMENTS

Title:
EXTERIOR ELEVATIONS

Sheet No.
A211

4/10/2024 12:37:38 PM C:\Users\LAndreianu\Documents\2301115_RIPTA_PassengerFacility_R23_Arch_landreianu.rvt

© 2022 BL COMPANIES, INC. THESE DRAWINGS SHALL NOT BE UTILIZED BY ANY PERSON, FIRM OR CORPORATION WITHOUT THE SPECIFIC WRITTEN PERMISSION OF BL COMPANIES.

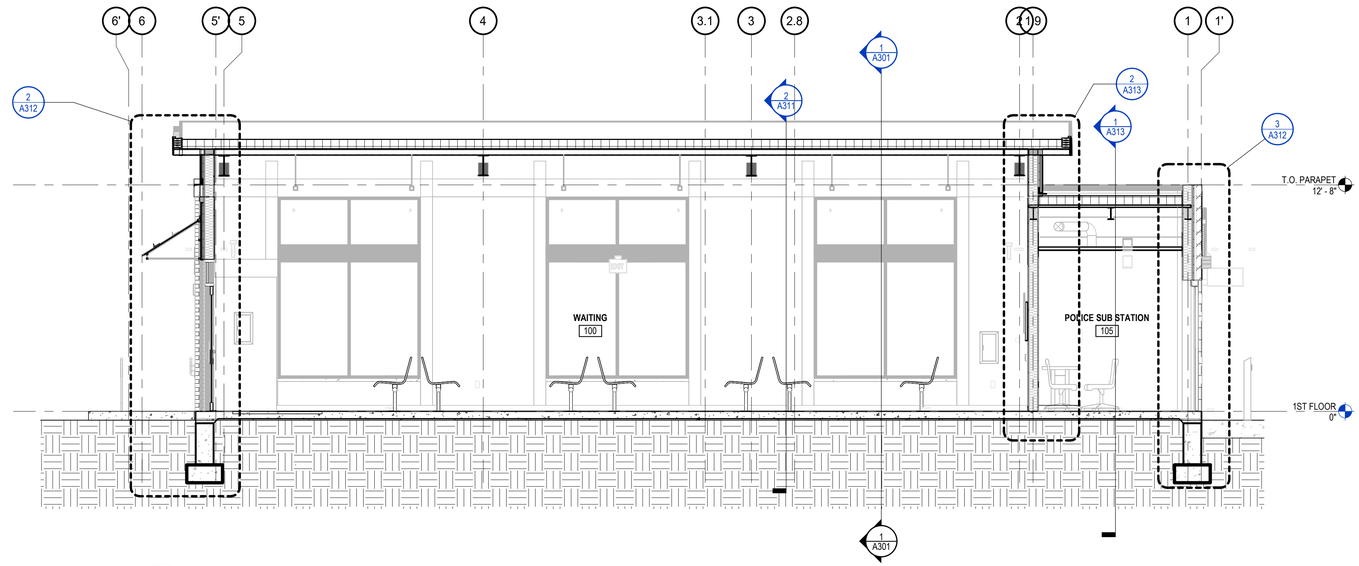

2 BUILDING SECTION E/W
1/4" = 1'-0"

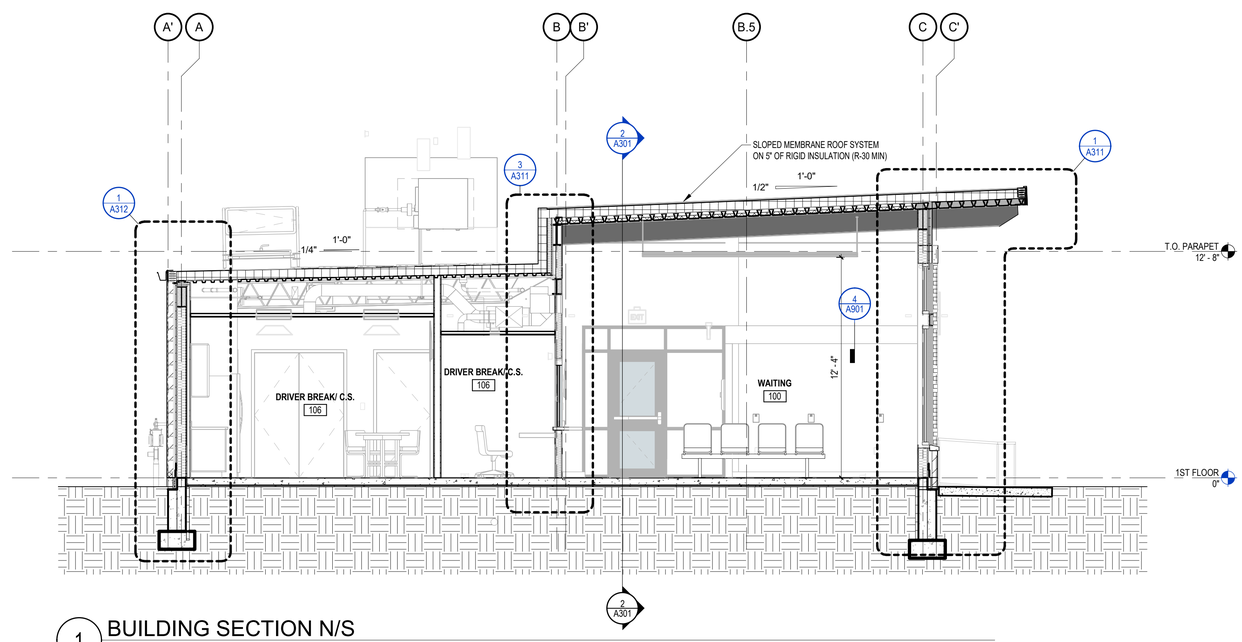

1 BUILDING SECTION N/S
1/4" = 1'-0"

Architecture
Engineering
Environmental
Land Surveying
BL Companies

355 Research Parkway
Meriden, CT 06450
(203) 630-1406
(203) 630-2615 Fax

CHRISTEN M. ROBINS
No. 18,188
REGISTERED ARCHITECT

PAWTUCKET-CENTRAL FALLS TRANSIT CENTER
300 PINE STREET PAWTUCKET, RI 02860

REVISIONS

NO	DATE	DESCRIPTION

Designed:	CR
Drawn:	MC
Reviewed:	JJ
Project No.:	230115
Date:	04/09/2024

Issued for:
CONSTRUCTION DOCUMENTS

Title:
BUILDING SECTIONS

Sheet No.
A301

4/9/2024 4:01:54 PM C:\Users\LAndreianu\Documents\23011115_RIPTA_PassengerFacility_R23_Arch_landreianu.rvt

© 2022 BL COMPANIES, INC. THESE DRAWINGS SHALL NOT BE UTILIZED BY ANY PERSON, FIRM OR CORPORATION WITHOUT THE SPECIFIC WRITTEN PERMISSION OF BL COMPANIES.

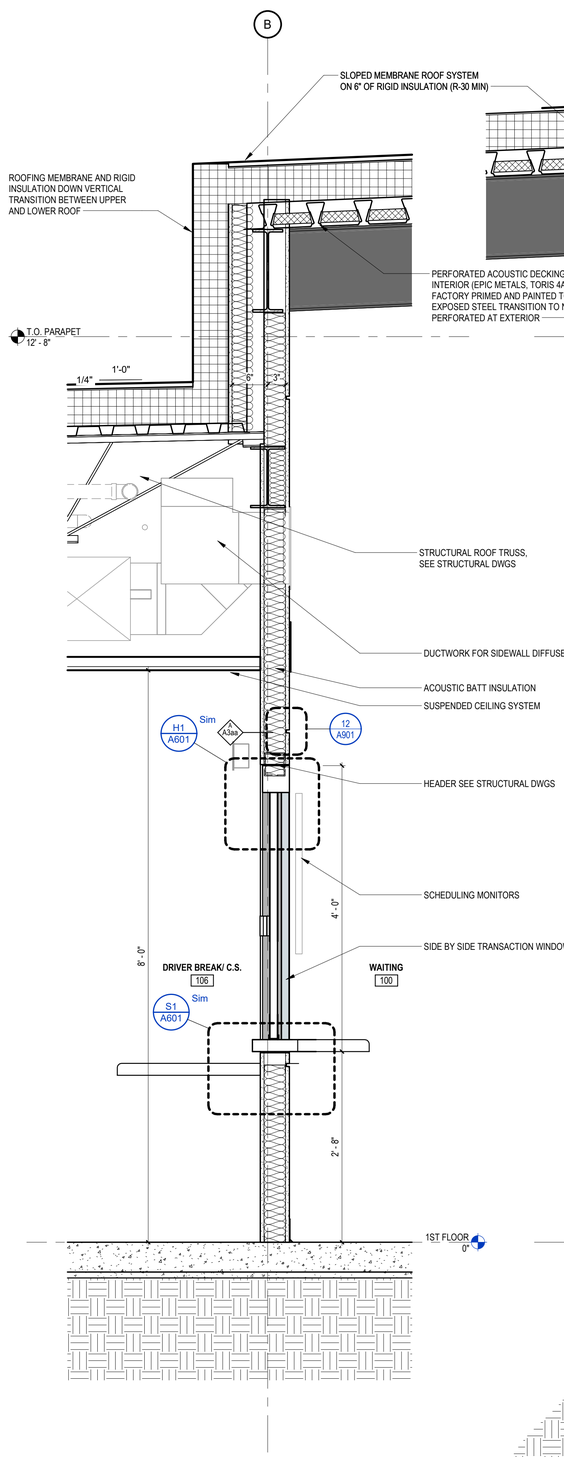

3 WALL SECTION - TRANSACTION
1" = 1'-0"

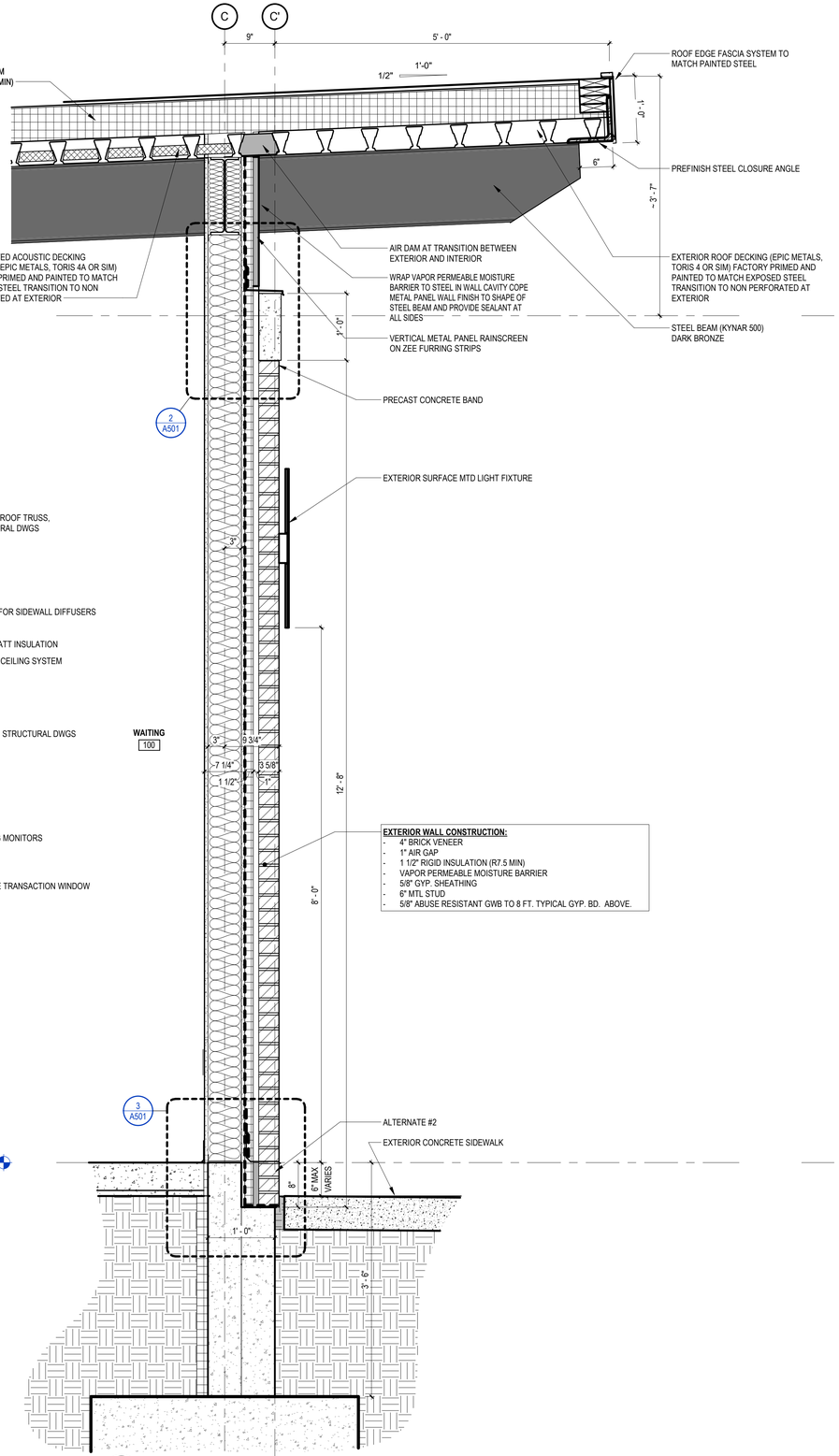

2 WALL SECTION - WAITING AREA BRICK
1" = 1'-0"

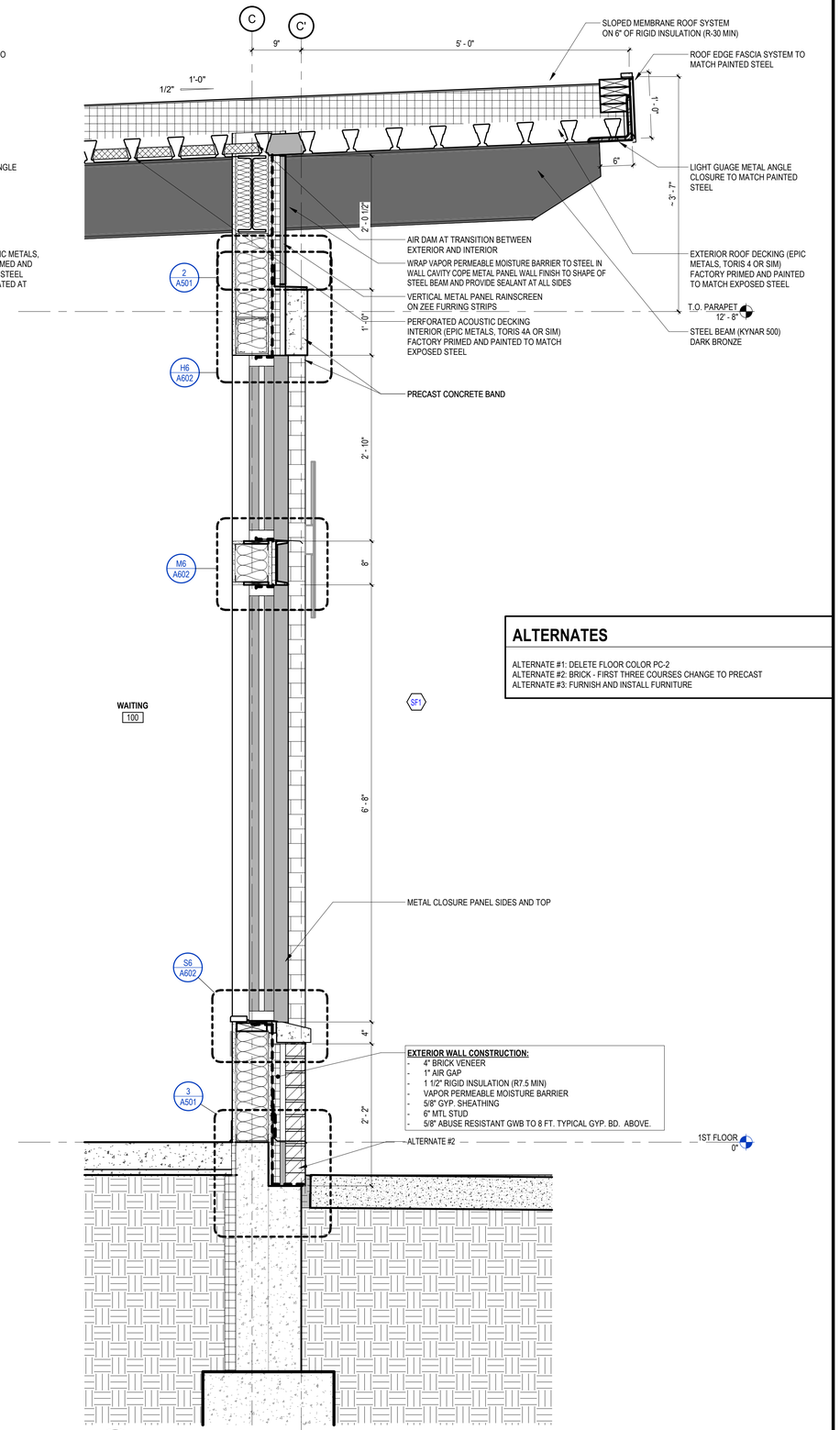

1 WALL SECTION - WAITING AREA WINDOW
1" = 1'-0"

ALTERNATES

ALTERNATE #1: DELETE FLOOR COLOR PC-2
ALTERNATE #2: BRICK - FIRST THREE COURSES CHANGE TO PRECAST
ALTERNATE #3: FURNISH AND INSTALL FURNITURE

Architecture
Engineering
Environmental
Land Surveying
BL Companies
355 Research Parkway
Meriden, CT 06450
(203) 630-1406
(203) 630-2615 Fax

CHRISTEN M. ROBINSON
NO. 9 SEPTEMBER 2024
REGISTERED ARCHITECT

PAWTUCKET-CENTRAL FALLS TRANSIT CENTER
300 PINE STREET PAWTUCKET, RI 02860

REVISIONS

NO	DATE	DESCRIPTION

Designed:	CR
Drawn:	MC
Reviewed:	JJ
Project No.:	230115
Date:	04/09/2024

Issued for:
CONSTRUCTION DOCUMENTS

Title:
WALL SECTIONS

Sheet No.
A311

4/9/2024 4:01:56 PM C:\Users\LAndreianu\Documents\2301115_RIPTA_PassengerFacility_R23_Arch_landreianu.rvt

© 2022 BL COMPANIES, INC. THESE DRAWINGS SHALL NOT BE UTILIZED BY ANY PERSON, FIRM OR CORPORATION WITHOUT THE SPECIFIC WRITTEN PERMISSION OF BL COMPANIES.

ALTERNATES

ALTERNATE #1: DELETE FLOOR COLOR PC-2
ALTERNATE #2: BRICK - FIRST THREE COURSES CHANGE TO PRECAST
ALTERNATE #3: FURNISH AND INSTALL FURNITURE

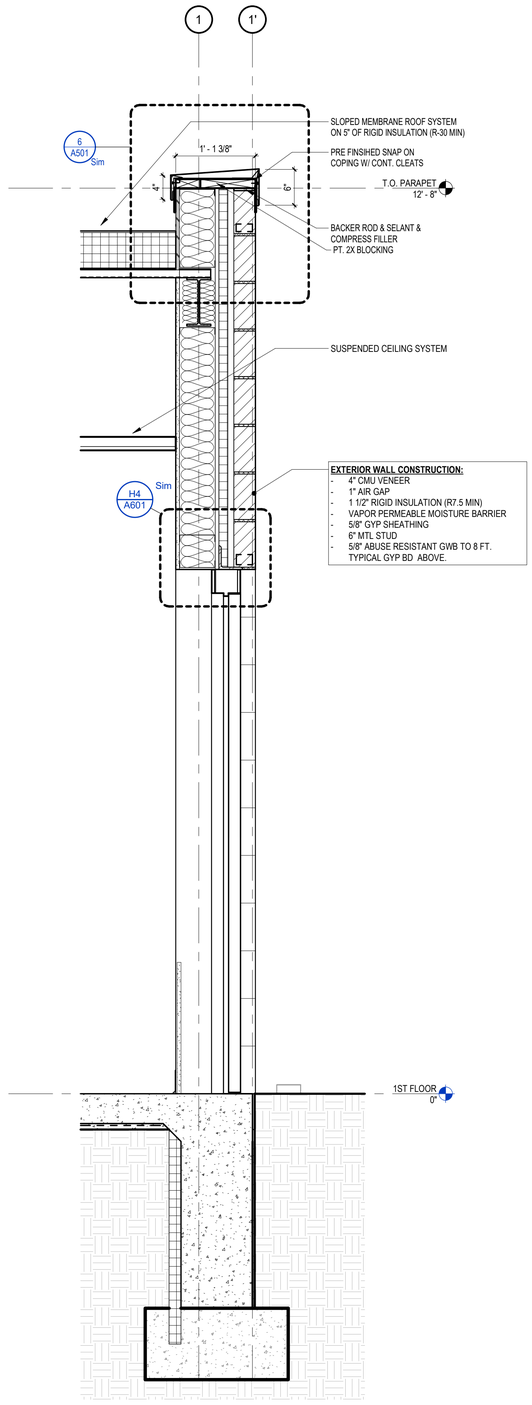

3 WALL SECTION - CMU VENEER @ DOOR
1" = 1'-0"

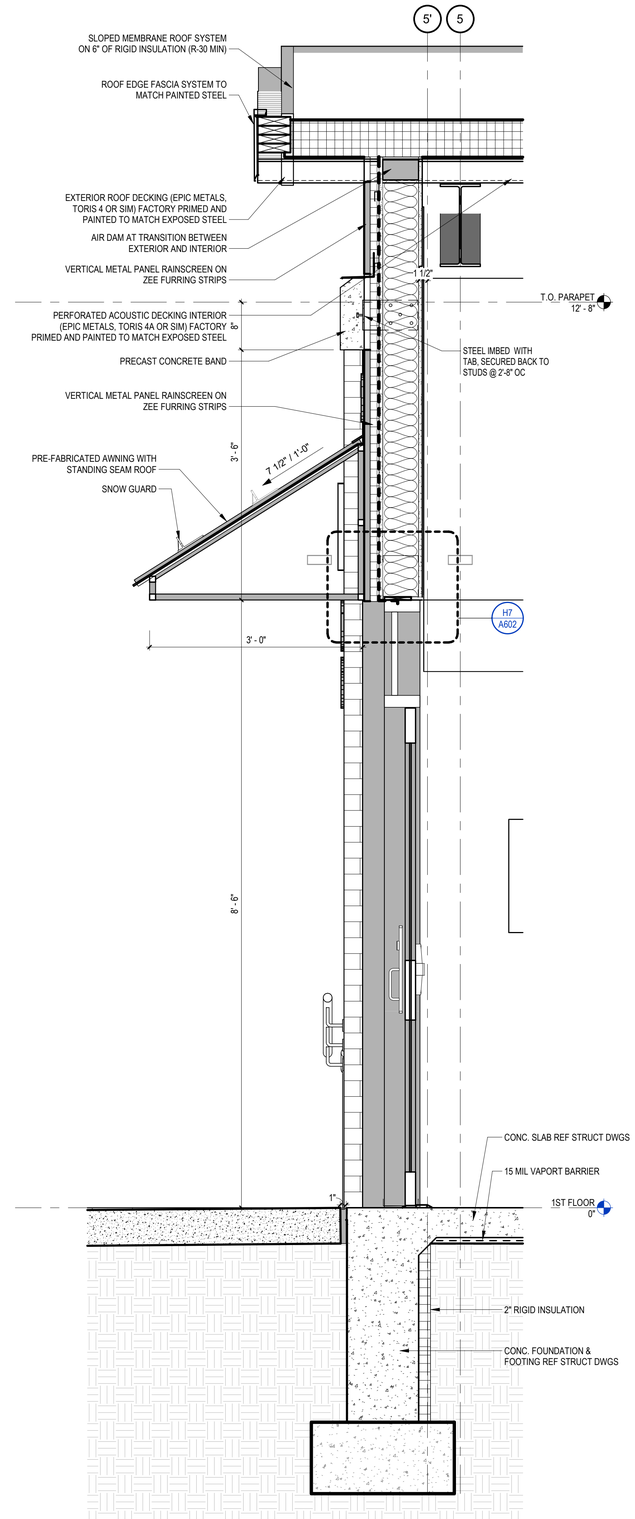

2 WALL SECTION - ENTRY
1" = 1'-0"

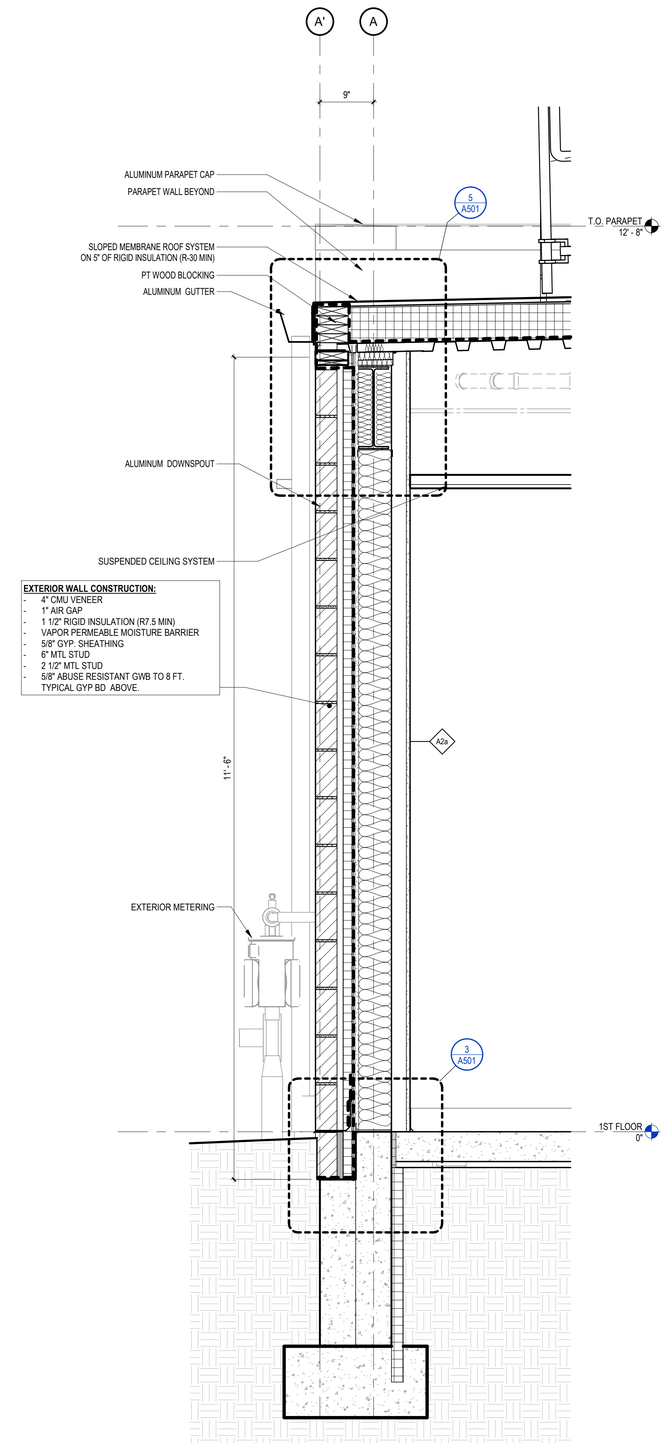

1 WALL SECTION - CMU VENEER
1" = 1'-0"

Architecture
Engineering
Environmental
Land Surveying
BL Companies

355 Research Parkway
Meriden, CT 06450
(203) 630-1406
(203) 630-2615 Fax

CHRISTEN M. ROBINS
REGISTERED ARCHITECT

PAWTUCKET-CENTRAL FALLS TRANSIT CENTER
300 PINE STREET PAWTUCKET, RI 02860

REVISIONS

NO	DATE	DESCRIPTION

Designed:	CR
Drawn:	MC
Reviewed:	JJ
Project No.:	230115
Date:	04/09/2024

Issued for:
CONSTRUCTION DOCUMENTS

Title:
WALL SECTIONS

Sheet No.
A312

4/10/2024 12:43:32 PM C:\Users\LAndreianu\Documents\23011115_RIPTA_PassengerFacility_R23_Arch_landreianu.rvt

© 2022 BL COMPANIES, INC. THESE DRAWINGS SHALL NOT BE UTILIZED BY ANY PERSON, FIRM OR CORPORATION WITHOUT THE SPECIFIC WRITTEN PERMISSION OF BL COMPANIES.

ALTERNATES

ALTERNATE #1: DELETE FLOOR COLOR PC-2
ALTERNATE #2: BRICK - FIRST THREE COURSES CHANGE TO PRECAST
ALTERNATE #3: FURNISH AND INSTALL FURNITURE

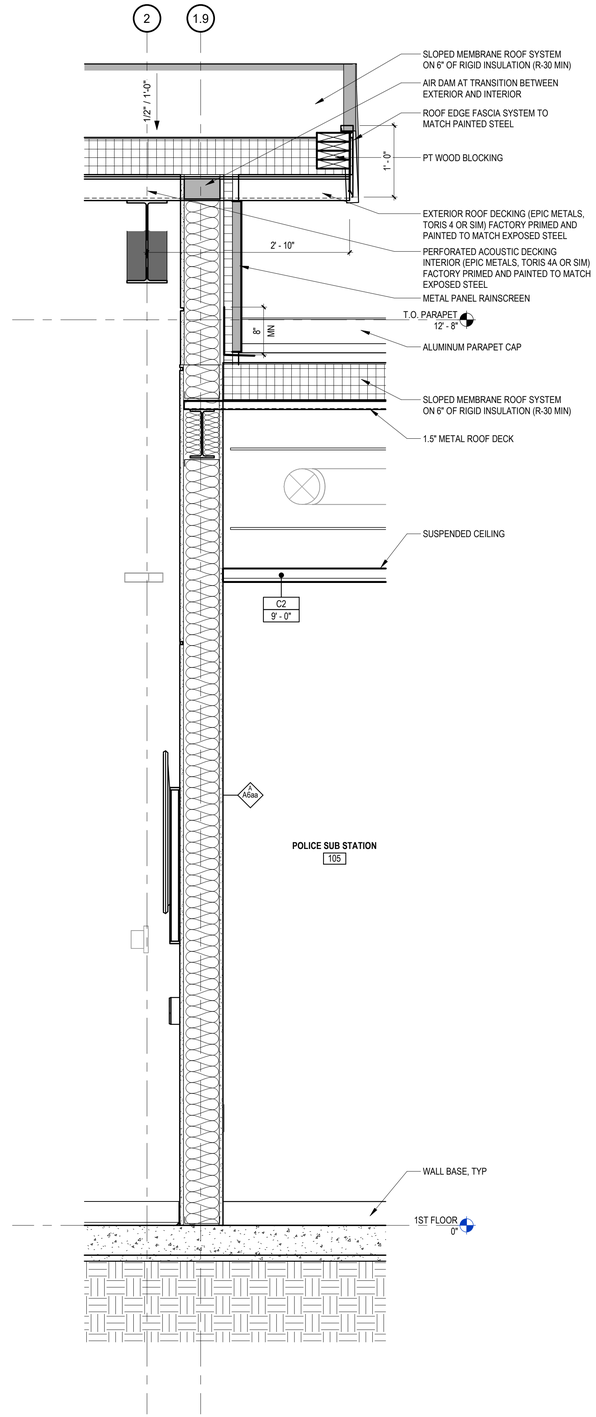

2 WALL SECTION - ROOF TRANSITION
1" = 1'-0"

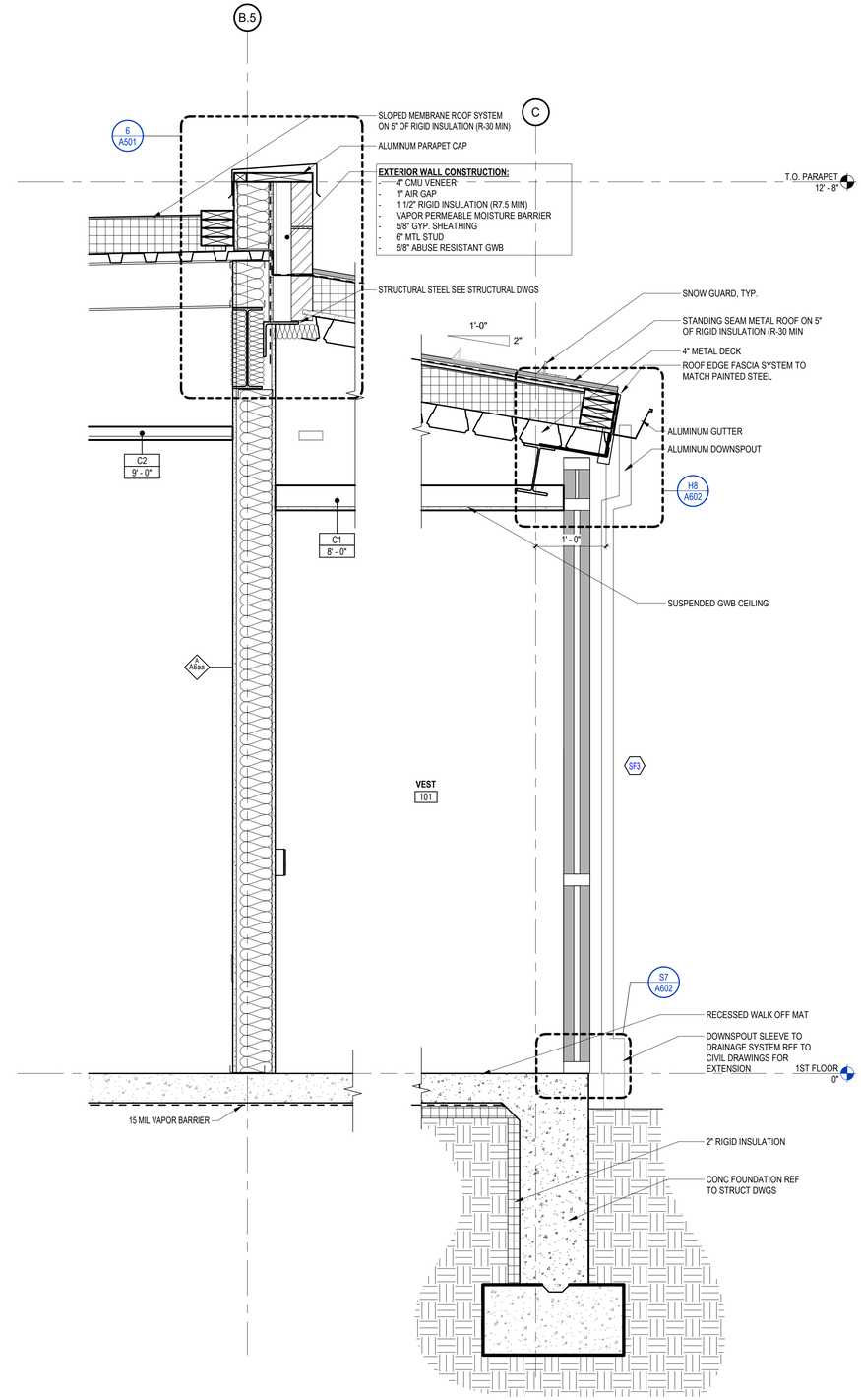

1 WALL SECITON - WAITING AREA BRICK1
1" = 1'-0"

Architecture
Engineering
Environmental
Land Surveying
BL Companies

355 Research Parkway
Meriden, CT 06450
(203) 630-1406
(203) 630-2615 Fax

CHRISTEN M. ROBINS
REGISTERED ARCHITECT

PAWTUCKET-CENTRAL FALLS TRANSIT CENTER
300 PINE STREET PAWTUCKET, RI 02860

REVISIONS

NO	DATE	DESCRIPTION

Designed:	CR
Drawn:	MC
Reviewed:	JJ
Project No.:	230115
Date:	04/09/2024

Issued for:
CONSTRUCTION DOCUMENTS

Title:
WALL SECTIONS

Sheet No.
A313

4/9/2024 4:01:57 PM C:\Users\LAndreianu\Documents\2301115_RIPTA_PassengerFacility_R23_Arch_landreianu.rvt

© 2022 BL COMPANIES, INC. THESE DRAWINGS SHALL NOT BE UTILIZED BY ANY PERSON, FIRM OR CORPORATION WITHOUT THE SPECIFIC WRITTEN PERMISSION OF BL COMPANIES.

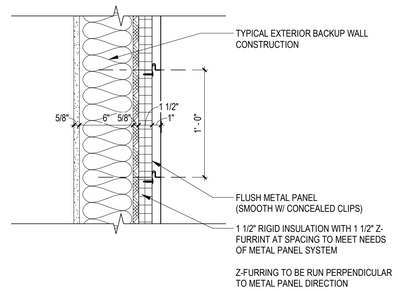

1 TYPICAL METAL PANEL SYSTEM
1 1/2" = 1'-0"

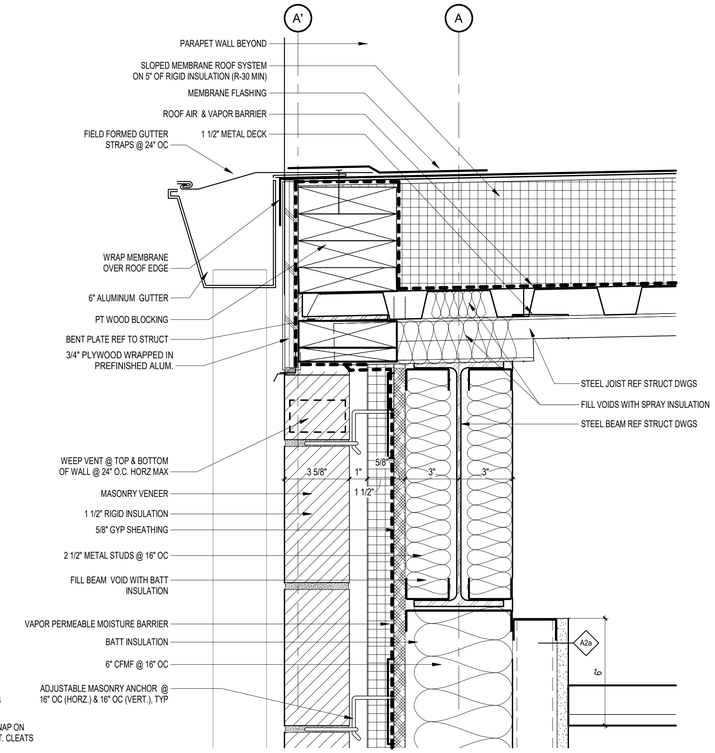

5 DETAIL AT GUTTER
3" = 1'-0"

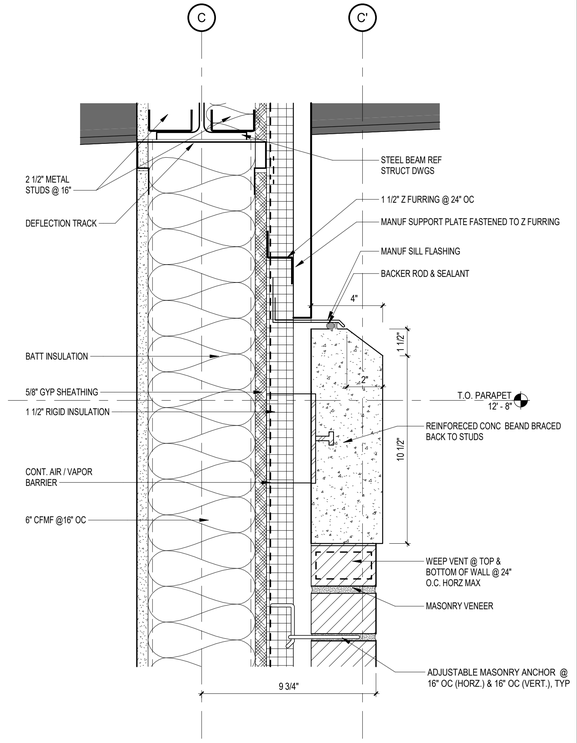

2 TYPICAL - CAST STONE BAND DETAIL
3" = 1'-0"

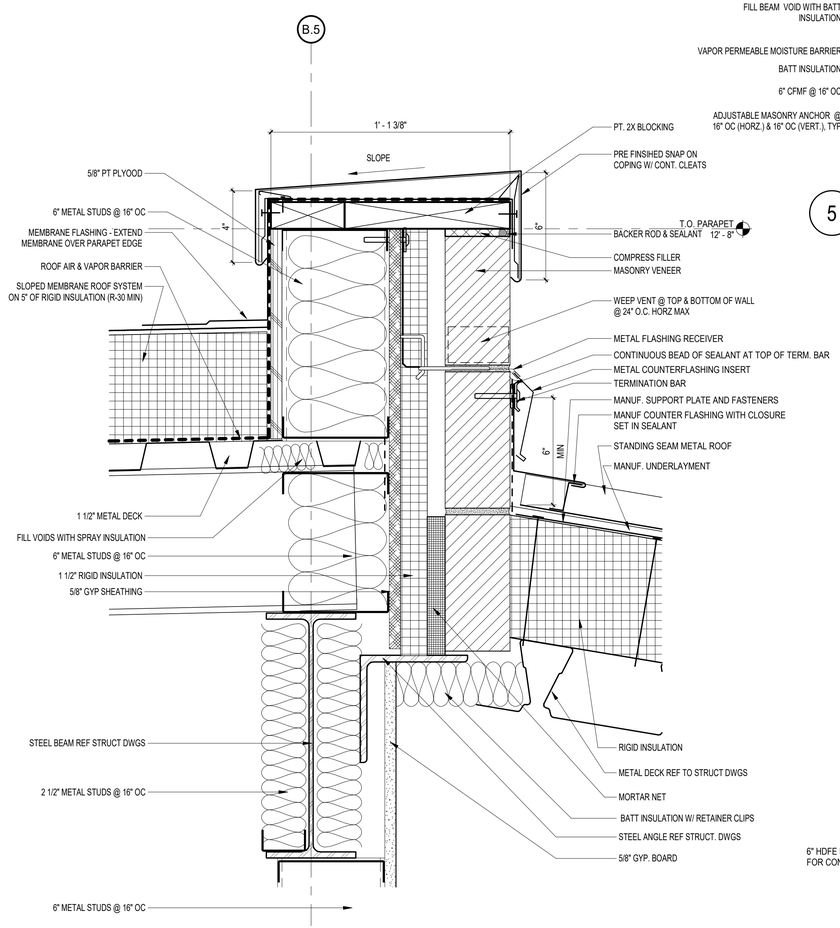

6 PARAPET DETAIL @ ROOF TRANSITION
3" = 1'-0"

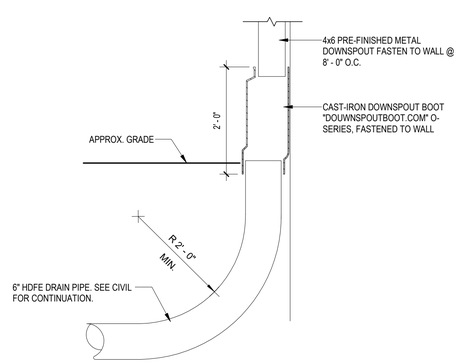

4 DOWNSPOUT BOOT
3/4" = 1'-0"

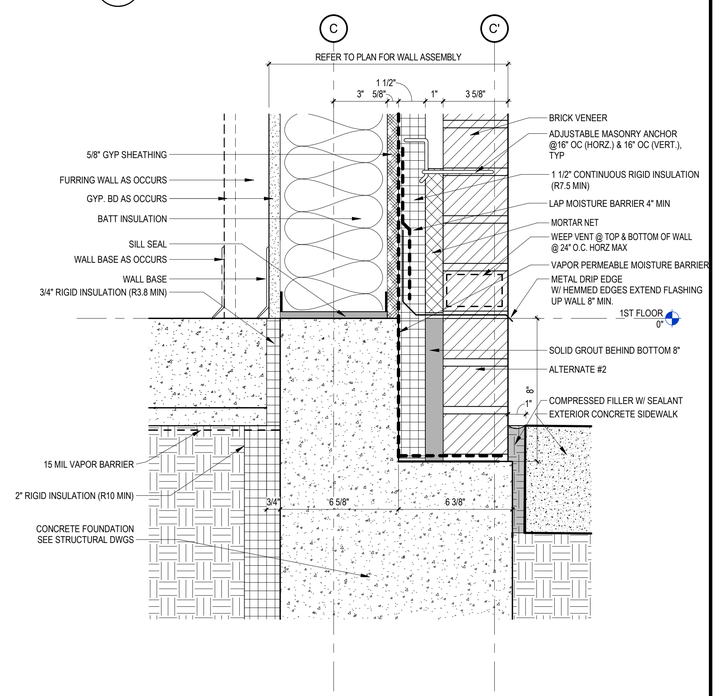

3 TYPICAL FOUNDATION DETAIL
3" = 1'-0"

ALTERNATES

ALTERNATE #1: DELETE FLOOR COLOR PC-2
ALTERNATE #2: BRICK - FIRST THREE COURSES CHANGE TO PRECAST
ALTERNATE #3: FURNISH AND INSTALL FURNITURE

Architecture
Engineering
Environmental
Land Surveying
BL Companies
355 Research Parkway
Meriden, CT 06450
(203) 630-1406
(203) 630-2615 Fax

CHRISTEN M. ROBINS
REGISTERED ARCHITECT

PAWTUCKET-CENTRAL FALLS TRANSIT CENTER
300 PINE STREET PAWTUCKET, RI 02860

REVISIONS

NO	DATE	DESCRIPTION

Designed:	CR
Drawn:	TJ, LA
Reviewed:	JJ
Project No.:	230115
Date:	04/09/2024

Issued for:
CONSTRUCTION DOCUMENTS

Title:
TYPICAL EXTERIOR DETAILS

Sheet No.
A501

4/10/2024 12:51:51 PM C:\Users\LAndreianu\Documents\2301115_RIPTA_PassengerFacility_R23_Arch_landreianu.rvt

© 2022 BL COMPANIES, INC. THESE DRAWINGS SHALL NOT BE UTILIZED BY ANY PERSON, FIRM OR CORPORATION WITHOUT THE SPECIFIC WRITTEN PERMISSION OF BL COMPANIES.

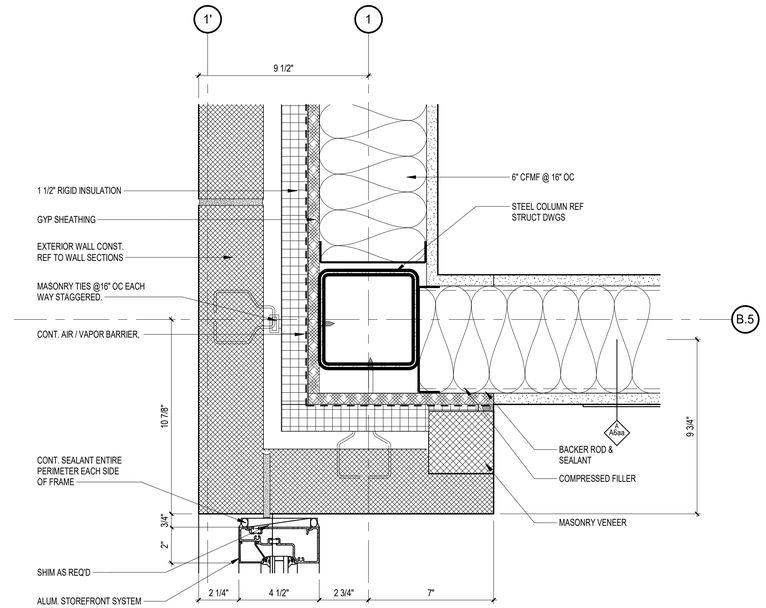

4 PLAN DETAIL
3" = 1'-0"

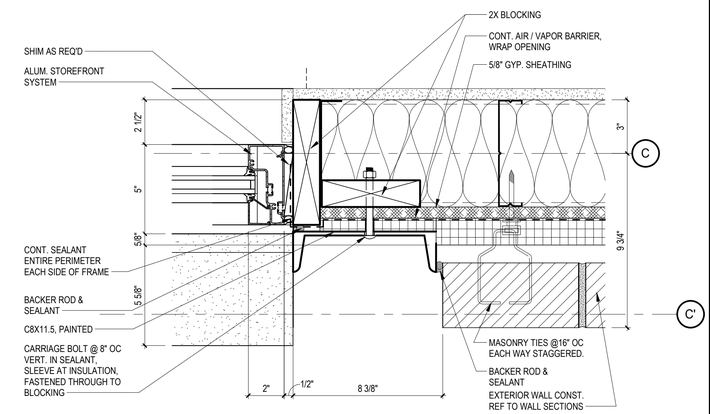

3 PLAN DETAIL
3" = 1'-0"

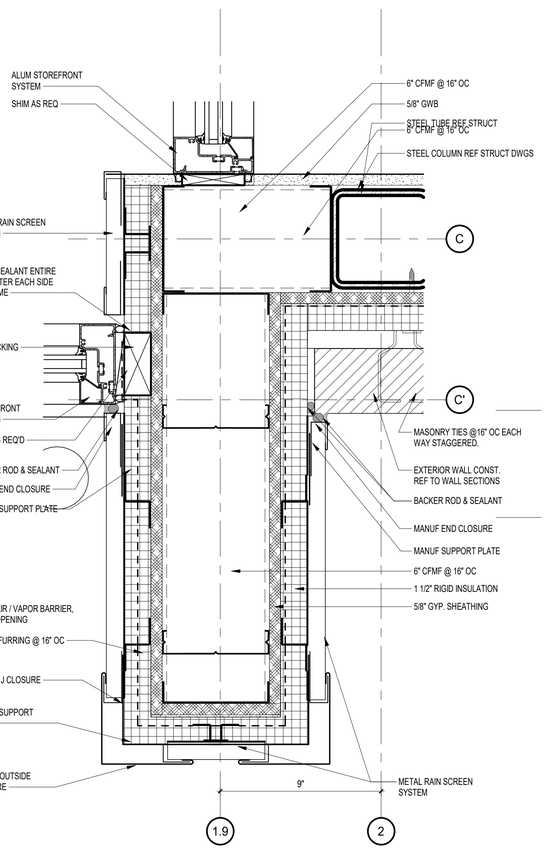

2 PLAN DETAIL @ WALL FINS
3" = 1'-0"

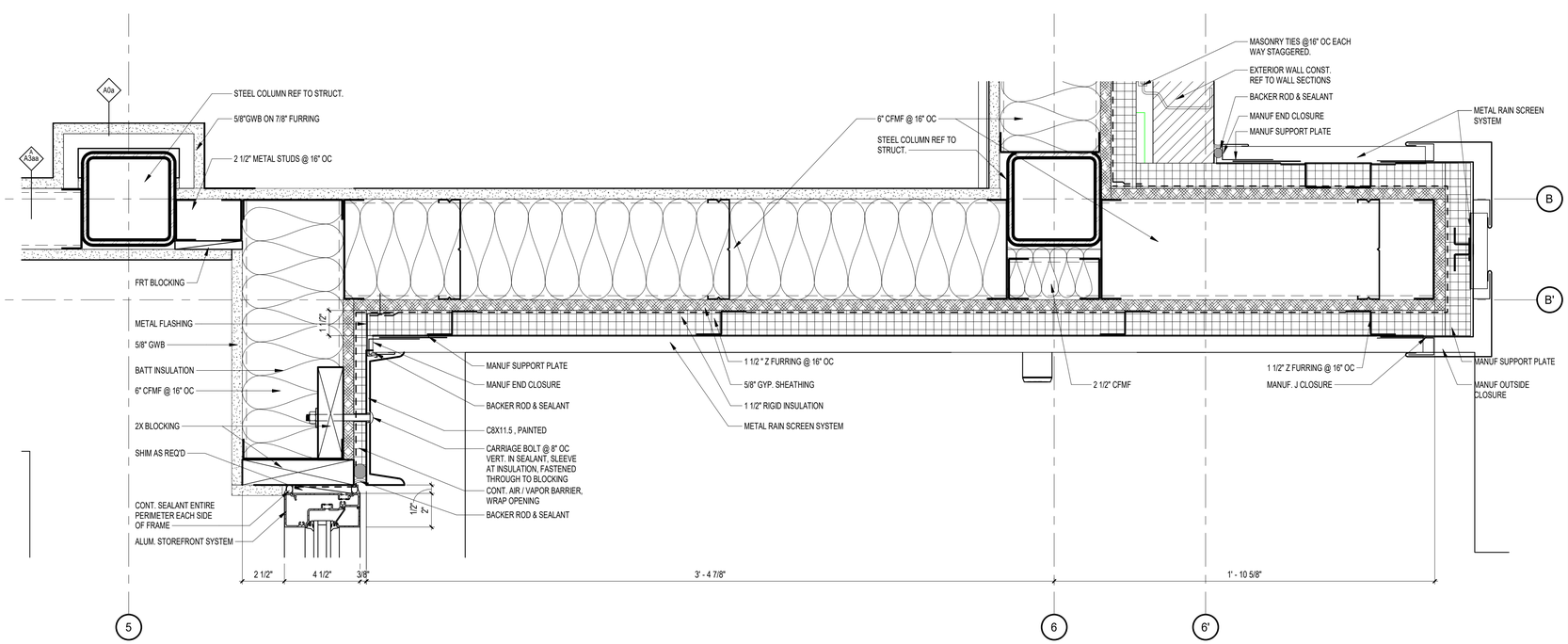

1 PLAN DETAIL
3" = 1'-0"

© 2022 BL COMPANIES, INC. THESE DRAWINGS SHALL NOT BE UTILIZED BY ANY PERSON, FIRM OR CORPORATION WITHOUT THE SPECIFIC WRITTEN PERMISSION OF BL COMPANIES.

4/9/2024 4:02:00 PM C:\Users\LAndreianu\Documents\23011115_RIPTA_PassengerFacility_R23_Arch_landreianu.rvt

Architecture
Engineering
Environmental
Land Surveying
BL Companies

355 Research Parkway
Meriden, CT 06450
(203) 630-1406
(203) 630-2615 Fax

CHRISTEN M. ROBINS
REGISTERED ARCHITECT

PAWTUCKET-CENTRAL FALLS TRANSIT CENTER
300 PINE STREET PAWTUCKET, RI 02860

REVISIONS

NO	DATE	DESCRIPTION

Designed:	CR
Drawn:	TJ, LA
Reviewed:	JJ
Project No.:	230115
Date:	04/09/2024

Issued for:
CONSTRUCTION DOCUMENTS

Title:
PLAN DETAILS

Sheet No.
A551

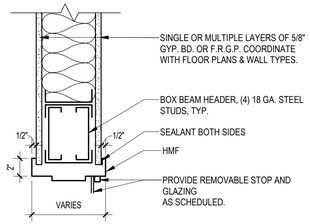

H2 HEAD @ HM DOOR
1 1/2" = 1'-0"

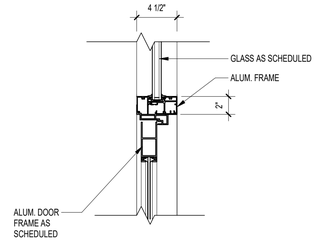

H5 HEAD @ ALUMINUM DOOR
1 1/2" = 1'-0"

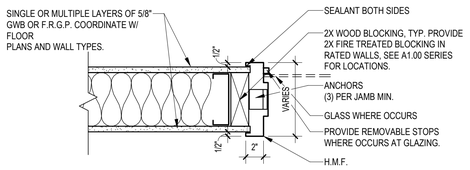

J2 JAMB @ HM DOOR
1 1/2" = 1'-0"

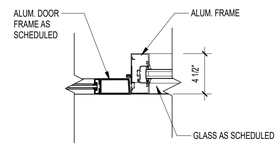

J5 JAMB @ ALUMINUM DOOR
1 1/2" = 1'-0"

DOOR AND FRAME SCHEDULE																
	RATINGS			DOOR						FRAME						
				SIZE			DESCRIPTION			DESCRIPTION		DETAILS				
DOOR NUMBER	FIRE RATING	DOOR LABEL	STC RATING	PANEL 1 WIDTH	PANEL 2 WIDTH	HEIGHT	PANEL 1 TYPE	PANEL 2 TYPE	FINISH	TYPE	FINISH	HEAD DETAIL	JAMB DETAIL	SILL DETAIL	HARDWARE SET	REMARKS
1ST FLOOR																
100				3' - 0"	0"	7' - 0"	FG1		AL	SF2	AL	H5	J5	S5	HW-1	SIGN E
101A				3' - 0"	3' - 0"	8' - 0"	FG1	FG1	AL	SF4	AL	H4	J4	S4	HW-2	SIGN TYPE E
101B				3' - 0"	3' - 0"	8' - 0"	FG1	FG1	AL	SF5	AL	H4	J4	S4	HW-3	SIGN TYPE E
105A				3' - 0"	0"	7' - 0"	N	-	PT	HM2	PT	H4	J4	S4	HW-4	CR; SIGN TYPE E
105B				3' - 0"	0"	7' - 0"	N	-	WD	HM1	PT	H2	J2		HW-5	CR; SIGN TYPE B
106A				3' - 0"	0"	7' - 0"	N	-	PT	HM2	PT	H4	J4	S4	HW-6	CR; SIGN TYPE E
106B				3' - 0"	0"	7' - 0"	N	-	WD	HM1	PT	H2	J2		HW-7	CR; SIGN TYPE C IN WAITING SIGN TYPE B DRIVER BREAK
107				3' - 0"	0"	7' - 0"	F	-	WD	HM1	PT	H2	J2		HW-8	SIGN TYPE D
108				3' - 0"	0"	7' - 0"	F	-	WD	HM1	PT	H2	J2		HW-9	SIGN TYPE D
109				3' - 0"	0"	7' - 0"	F	-	PT	HM1	PT	H2	J2		HW-9	SIGN TYPE A
110				2' - 6"	2' - 6"	7' - 0"	F	F	PT	HM1	PT	H2	J2		HW-10	CR; SIGN TYPE A
111				3' - 0"	0"	7' - 0"	F	-	PT	HM1	PT	H2	J2		HW-11	SIGN TYPE A
112				3' - 0"	0"	7' - 0"	F	-	WD	HM1	PT	H2	J2		HW-12	SIGN TYPE D
113				3' - 0"	0"	7' - 0"	F	-	WD	HM1	PT	H2	J2		HW-13	SIGN TYPE D
114				3' - 0"	1' - 0"	7' - 0"	F	F	PT	HM1	PT				HW-13	SIGN TYPE A

CR - CARD READER
WD - WOOD (STAINED)
PT - PAINT
AL - ALUMINUM

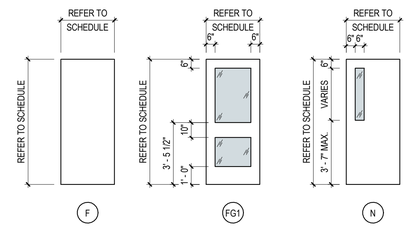

DOOR TYPES
1/4" = 1'-0"

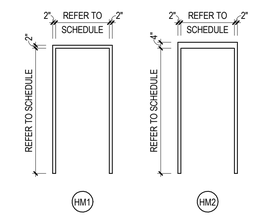

HOLLOW METAL FRAME TYPES
1/4" = 1'-0"

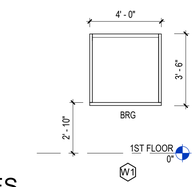

TRANSACTION WINDOW

DOOR AND FRAME GENERAL NOTES

1. ALL DOORS ARE 1 3/4" UNLESS OTHERWISE NOTED.
2. ALL INTERIOR GLAZING IS TO BE 1/4" GLASS AND EXTERIOR GLAZING IS TO BE 1" INSULATED GLASS UNLESS OTHWISE NOTED.
3. ALL EXTERIOR HOLLOW METAL DOORS ARE INSULATED.
4. REFER TO SPECIFICATION FOR HARDWARE SET DESCRIPTIONS.
5. ALL DOORS TO HAVE STANDARD 5/16" UNDERCUT UNLESS OTHERWISE INDICATED OR REQUIRED TO RECIEVE SCHEDULED THRESHOLD.
6. INDICATED FIRE RATING IS IN MINUTES.

GLAZING LEGEND

IG	INSULATED GLAZING
ISG	INSULATED SAFETY GLASS
BRG	BALLISTIC GLASS
MT1	1" INSULATED METAL PANEL IN STOREFRONT CAVITY

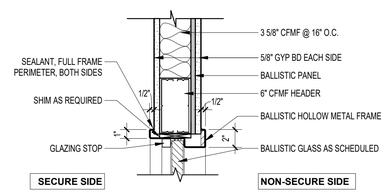

H1 HEADER DETAIL @ BALLISTIC WINDOW
1 1/2" = 1'-0"

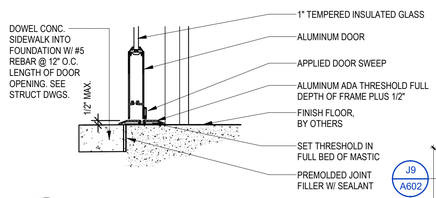

S5 SILL @ ALUMINUM DOOR
1 1/2" = 1'-0"

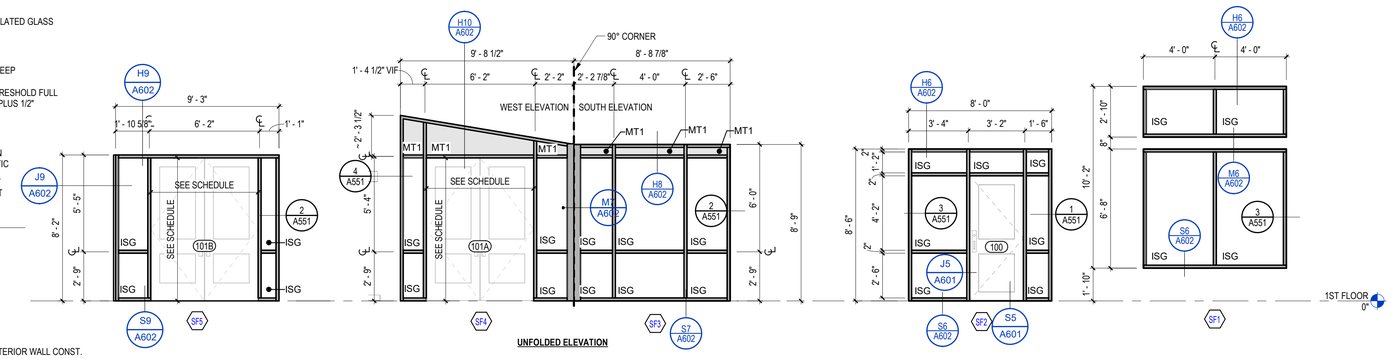

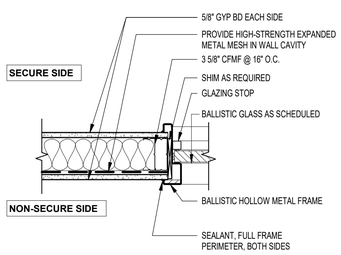

J1 JAMB @ BALLISTIC WINDOW
1 1/2" = 1'-0"

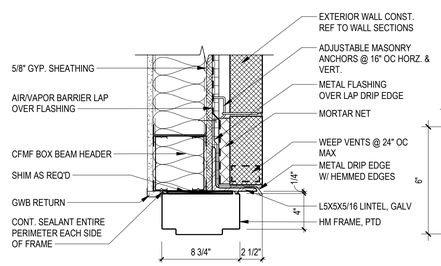

H4 H4 - HEAD @ HM EXTERIOR DOOR
1 1/2" = 1'-0"

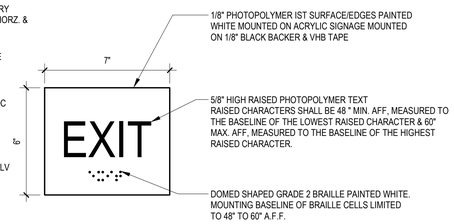

TYPE 'E'
EXIT SIGN

PROVIDE (1) SIGN PER EXIT DOOR (TYP). ALTERNATE EXIT SIGNS COMPLYING WITH ANSI A117.1-2009 ARE ACCEPTABLE.

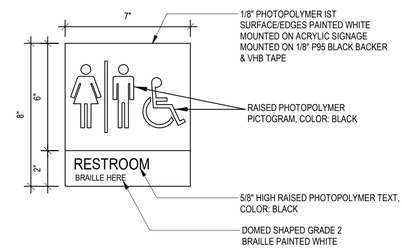

TYPE 'D'
RESTROOM SIGN

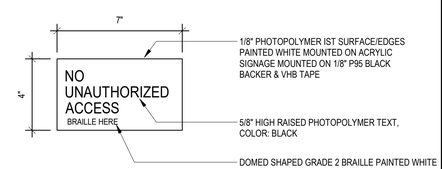

TYPE 'C'
ROOM SIGN - TRIPLE LINE

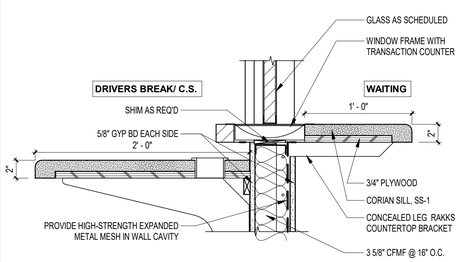

S1 SILL @ TRANSACTION WINDOW
1 1/2" = 1'-0"

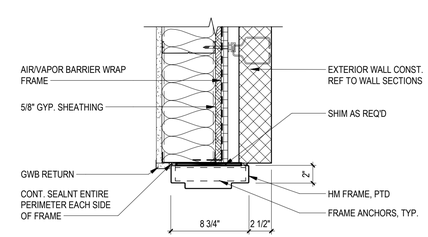

J4 J4 - JAMB @ HM EXTERIOR DOOR
1 1/2" = 1'-0"

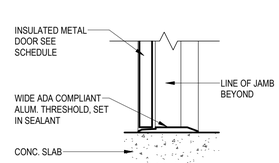

S4 SILL @ HM DOOR
1 1/2" = 1'-0"

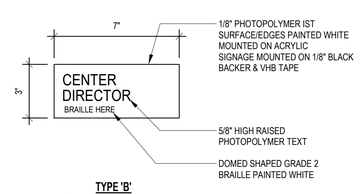

TYPE 'B'
ROOM SIGN - DOUBLE LINE

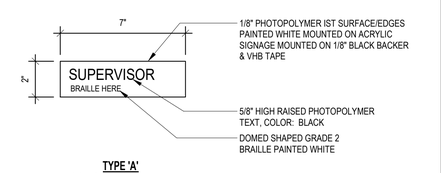

TYPE 'A'
ROOM SIGN - SINGLE LINE

8 SIGNAGE TYPES
3" = 1'-0"

Architecture
Engineering
Environmental
Land Surveying
BL Companies
355 Research Parkway
Meriden, CT 06450
(203) 630-1406
(203) 630-2615 Fax

CHRISTEN M. ROBINS
REGISTERED ARCHITECT

PAWTUCKET-CENTRAL FALLS TRANSIT CENTER
300 PINE STREET PAWTUCKET, RI 02860

REVISIONS		
NO	DATE	DESCRIPTION

Designed:	CR
Drawn:	LA, TJ
Reviewed:	JJ
Project No.:	230115
Date:	04/09/2024
Issued for:	CONSTRUCTION DOCUMENTS

Title: DOOR SCHEDULE, WINDOW SCHEDULE AND DETAILS

Sheet No.
A601

4/9/2024 4:02:00 PM C:\Users\LAndreianu\Documents\23011115_RIPTA_PassengerFacility_R23_Arch_landreianu.rvt

© 2022 BL COMPANIES, INC. THESE DRAWINGS SHALL NOT BE UTILIZED BY ANY PERSON, FIRM OR CORPORATION WITHOUT THE SPECIFIC WRITTEN PERMISSION OF BL COMPANIES.

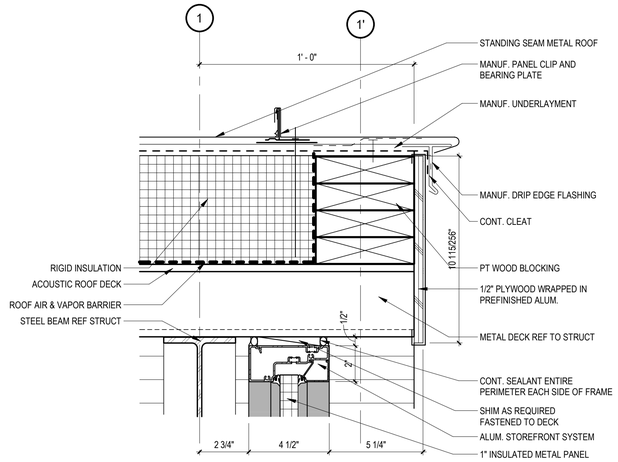

H10 WINDOW HEAD VESTIBLE
3" = 1'-0"

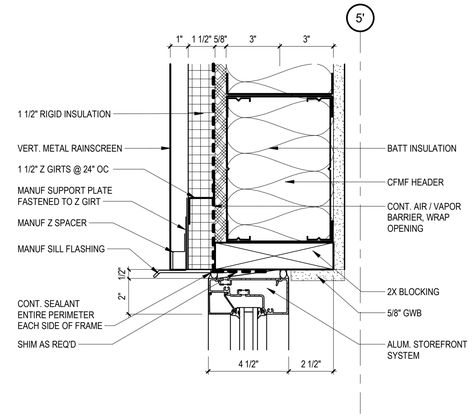

H7 ALUM HEAD DETAIL
3" = 1'-0"

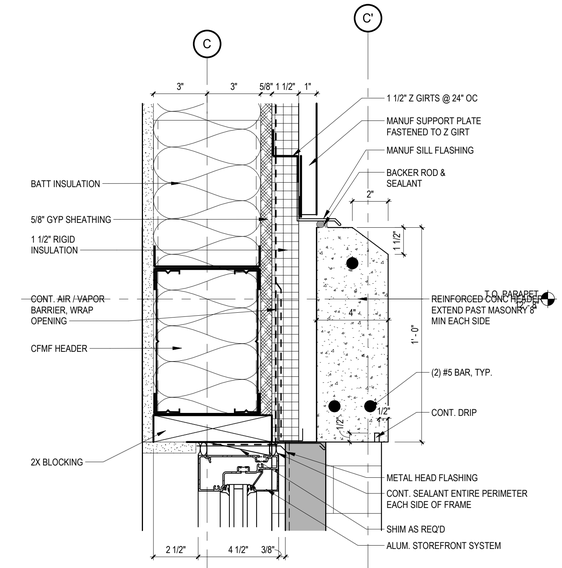

H6 ALUM HEAD DETAIL
3" = 1'-0"

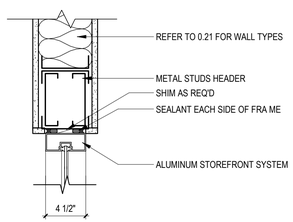

H9 GLASS HEAD DETAIL @ METAL STUD
1 1/2" = 1'-0"

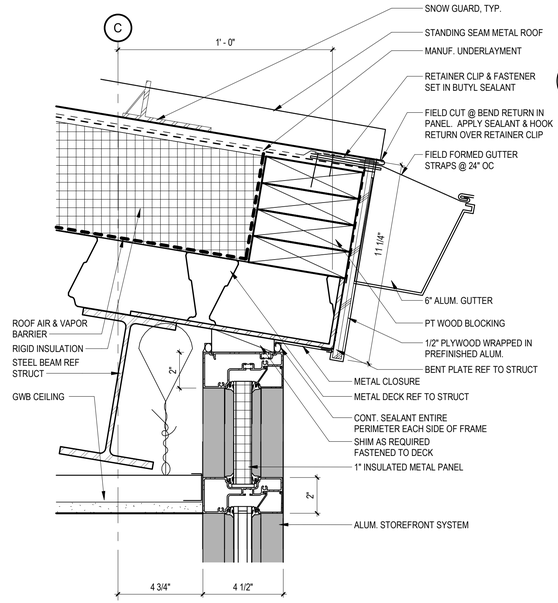

H8 ALF - HEAD @ ENTRY SOFFIT
3" = 1'-0"

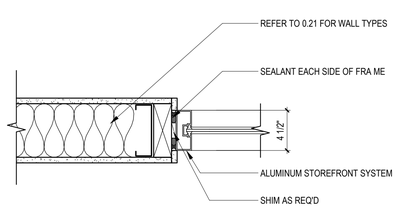

J9 GLASS JAMB DETAIL @ METAL STUD
1 1/2" = 1'-0"

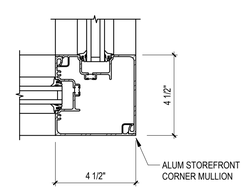

M7 MULLION DETAIL
3" = 1'-0"

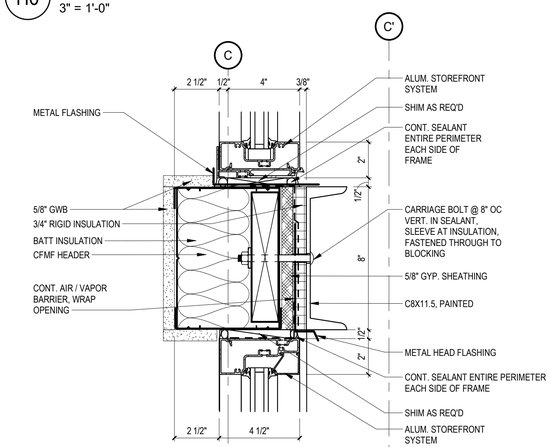

M6 ALUM MULLION DETAIL
3" = 1'-0"

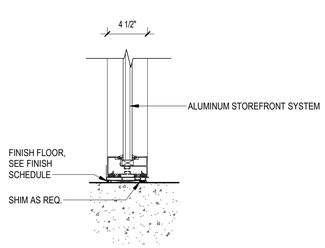

S9 GLASS SILL DETAIL @ INTERIOR
1 1/2" = 1'-0"

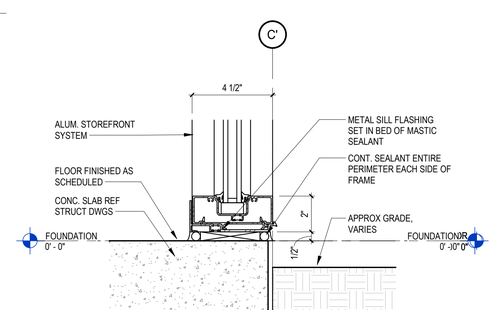

S7 ALUM SILL DETAIL
3" = 1'-0"

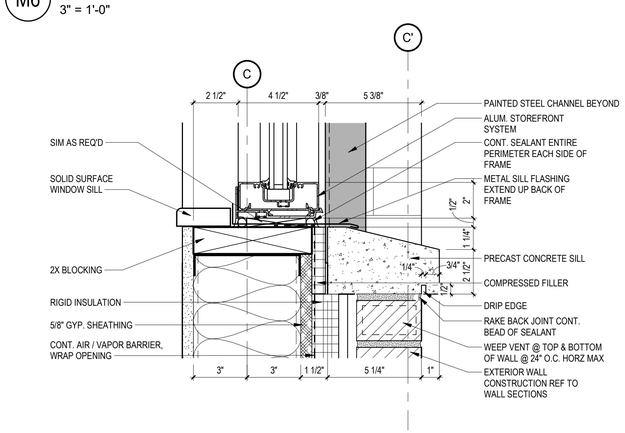

S6 ALUM WINDOW SILL DETAIL
3" = 1'-0"

© 2022 BL COMPANIES, INC. THESE DRAWINGS SHALL NOT BE UTILIZED BY ANY PERSON, FIRM OR CORPORATION WITHOUT THE SPECIFIC WRITTEN PERMISSION OF BL COMPANIES.

4/9/2024 4:02:02 PM C:\Users\LAndreianu\Documents\2301115_RIPTA_PassengerFacility_R23_Arch_landreianu.rvt

Architecture
Engineering
Environmental
Land Surveying
BL Companies
355 Research Parkway
Meriden, CT 06450
(203) 630-1406
(203) 630-2615 Fax

CHRISTEN M. ROBINS
REGISTERED ARCHITECT

PAWTUCKET-CENTRAL FALLS TRANSIT CENTER
300 PINE STREET PAWTUCKET, RI 02860

REVISIONS

NO	DATE	DESCRIPTION

Designed:	CR
Drawn:	TJ
Reviewed:	JJ
Project No.:	230115
Date:	04/09/2024
Issued for:	CONSTRUCTION DOCUMENTS

Title: WINDOW DETAILS

Sheet No. A602

FINISH PRODUCT LIST

MARK	TYPE	SPECIFICATION	REMARKS	FLAME SPREAD/ CLASS
FLOORING				
PC-1	POLISHED CONCRETE	MANUF: COLOR: CLEAR, SKID RESISTANT	ROOMS 100, 101, 111, 112 & 113	CLASS A
PC-2	POLISHED CONCRETE COLOR STAINED	MANUF: COLOR: SEE SPECIFICATIONS	ROOM 100. ALTERNATE #1	CLASS A
SC-1	SEALED CONCRETE	MANUF: COLOR: CLEAR, SEALED & CURED, SKID RESISTANT	ROOM 105, 106, 107, 108, 109, 110 & 114	CLASS A
WG	RECESSED WALK OFF GRATE	NYSTROM - GD74A SERRATED ALUMINUM	ROOM 100 &101	CLASS 1
VERTICAL SUFACES				
PT-1	PAINT 1	MANUF: SHERWIN WILLIAMS COLOR: SW 7004 - SNOWBOUND	WALL FIELD COLOR	
PT-2	PAINT 2	MANUF: SHERWIN WILLIAMS COLOR: SW 6810 - LUPINE	ACCENT WALLS: NORTH WALL @ 112, 113 & WING WALL TICKETING	
PT-3	PAINT 3	MANUF: SHERWIN WILLIAMS COLOR: SW 7668 - MARCH WIND	HM DOORS & HM DOOR FRAMES	
PT-4	PAINT 4	MANUF: SHERWIN WILLIAMS COLOR: SW 7629 - GRAPY	ALL INTERIOR EXPOSED STEEL & CEILING @ WAITING AREA. FOR EXTERIOR EXPOSED STEEL PROVIDE KYNAR 500	
PT-5	PAINT 5	MANUF: SHERWIN WILLIAMS COLOR: CEILING WHITE	ALL INTERIOR GYPSUM BOARD CEILINGS	
CT-1	CERAMIC TILE	MANUF: CROSSVILLE STYLE: HEXAGON MOSAIC, NVM05.1HEXIMOS COLOR: COBALT ORE	NORTH WALL @ DRINKING FOUNTAIN, ROOM 100	CLASS A
CT-2	CERAMIC TILE	MANUF: CROSSVILLE STYLE: FIELD TILE, 12"x 24", NVM05.11224UPS COLOR: CRUCIBLE STEEL	EAST WALL @ ROOM 112, WEST WALL @ ROOM 113	CLASS A
B-1	RUBBER BASE	MANUF: JOHNSONITE COLOR: BLACK - 4" BLACK COVE BASE	ALL WALLS EXCEPT TILED WALLS	CLASS B
B-2	BULLNOSE TILE	MANUF: CROSSVILLE STYLE: NATIVE METAL 4" X 24 BULLNOSE, NVM03.10424BNS COLOR: CRUCIBLE STEEL	EAST WALL @ ROOM 112, WEST WALL @ ROOM 113	CLASS A
B-3	BULLNOSE TILE	MANUF: CROSSVILLE STYLE: NATIVE METAL 4" X 24 BULLNOSE, NVM05.10424BNS COLOR: COBALT ORE	NORTH WALL @ DRINKING FOUNTAIN, ROOM 100	CLASS A
SS-1	COUNTER TOPS	MANUF: CORIAN COLOR: WILLOW	COUNTERS @ ROOM 106: KITCHENETTE & WORK SURFACE; ROOM 100: TRANSACTION COUNTER	CLASS A
SS-2	COUNTER TOPS	MANUF: CORIAN COLOR: GLACIER WHITE	SILL AT ALL SF1, ROOM 100	CLASS A
CG	CORNER GUARD	MANUF: CONSTRUCTION SPECIALTIES STYLE: ACROVYN COLOR: TO MATCH WALL MOUNTED ON	SEE LOCATIONS ON FINISH FLOOR PLAN	
PL-1	PLASTIC LAMINATE	MANUF: WILSON ART STYLE: MATTE FINISH, Y0602-60 COLOR: SMOKED WALNUT CROSSGRAIN	ROOM 106@ KITCHENETTE CABINETS & ADA COVER PANEL & APRON, ROOMS 107 & 108 @ ADA COVER PANEL & APRON	
FRP-1	FIBERGLASS REINFORCED PLASTIC PANELS	MANUF: CRANE COMPOSITES STYLE: EMBOSSED COLOR: WHITE	ROOM 111	CLASS A
CEILINGS (SEE A102 FOR LOCATIONS)				
C1	PAINTED GYPSUM	COLOR: PAINT - CEILING WHITE	ALL GYPSUM BOARD CEILINGS. REFER TO RCP	
C2	2x2 ACOUSTIC CEILING	MANUF: ARMSTONG COLOR: ULTIMA	ROOMS 105, 106, 107 & 108. REFER TO RCP	CLASS A

ALTERNATE 3: ALL FURNITURE TO BE FURNISHED AND INSTALLED BY CONTRACTOR UNDER ALTERNATE.

FURNITURE LEGEND

TAG	ITEM	MANUFACTURER & MODEL	QUANTITY	IND. TAG	OPTIONS	DESCRIPTION
C-1	CHAIR	KI STRIVE STACK CHAIR	9	SLNAP	/SX/NFR/PND/P	STRIVE FOUR-LEG ARMLESS CHAIR,POLY
C-2	CHAIR	KI DIEM TASK CHAIR	3	KIDE820	/P/BLBR/TBD	DIEM WEIGHT-ACTIVATED TASK CHAIR, ARMLESS
C-3	FIXED CHAIR	KI PROMENADE SEATING - 4-PLACE UNIT COLOR: NORDIC	7	PRM4/S4/0T	/INDOOR/ND	PROMENADE TANDEM,4 SEATS,NO TABLE,UNUPHOLSTERED,93"W
T-1	36" ROUND TABLE	KI BARRON TABLE - LX BASE - PRESSED LINEN	2	PR3FX-74P	/EWGSTANDARD/LPR/SX-NCST/PWG-NO	PORTICO FIXED LEG,ROUND,LX BASE,74P EDGE,36" DIA
T-2	24"X48" RECTANGULAR TABLE	KI BARRON TABLE - T-BASE	1	PLRT2460-74P	/EWG/NNNSTANDARD/LPR/SX/GLD/NMP	PILLAR TABLE,POST LEG,RECTANGULAR,24X60",29"H,74P EDGE
			6	87.6232	/ /ND	PROMENADE BACK-TO-BACK GANGING BAR

FINISH SCHEDULE

ROOM NUMBER	ROOM NAME	FLOORING FINISH	FLOORING BASE	WALL EAST WALL	WALL NORTH WALL	WALL SOUTH WALL	WALL WEST WALL	CEILING CEILING TYPE	CEILING FINISH
1ST FLOOR									
100	WAITING	PC-1&2	B-1	PT-1	PT-1&CT-1	PT-1	PT-1	EXP/C1	PT-5/PT-4
101	VEST	PC-1	B-1	PT-1	PT-1	PT-1	PT-1	C1	PT-5
105	POLICE SUB STATION	SC-1	B-1	PT-1	PT-1	PT-1	PT-1	C2	SEE SPECS
106	DRIVER BREAK/ C.S.	SC-1	B-1	PT-1	PT-1 & 2	PT-1	PT-1	C2	SEE SPECS
107	TLT	SC-1	B-1	PT-1	PT-1	PT-1	PT-1	C2	SEE SPECS
108	TLT	SC-1	B-1	PT-1	PT-1	PT-1	PT-1	C2	SEE SPECS
109	IT CL	SC-1	B-1	PT-1	PT-1	PT-1	PT-1	EXP	NOT PAINTED
110	UTILITIES CL	SC-1	B-1	PT-1	PT-1	PT-1	PT-1	EXP	NOT PAINTED
111	JAN CL	PC-1	B-1	FRP-1	FRP-1	FRP-1	FRP-1	C-2	SEE SPECS
112	MENS RESTROOM	PC-1	B-1	PT-1 & CT-2	PT-2	PT-1	PT-1	C1	PT-5
113	WOMENS RESTROOM	PC-1	B-1	PT-1	PT-2	PT-1	PT-1 & CT-2	C1	PT-5
114	WATER RM	SC-1	B-1	PT-1	PT-1	PT-1	PT-1	EXP	NOT PAINTED

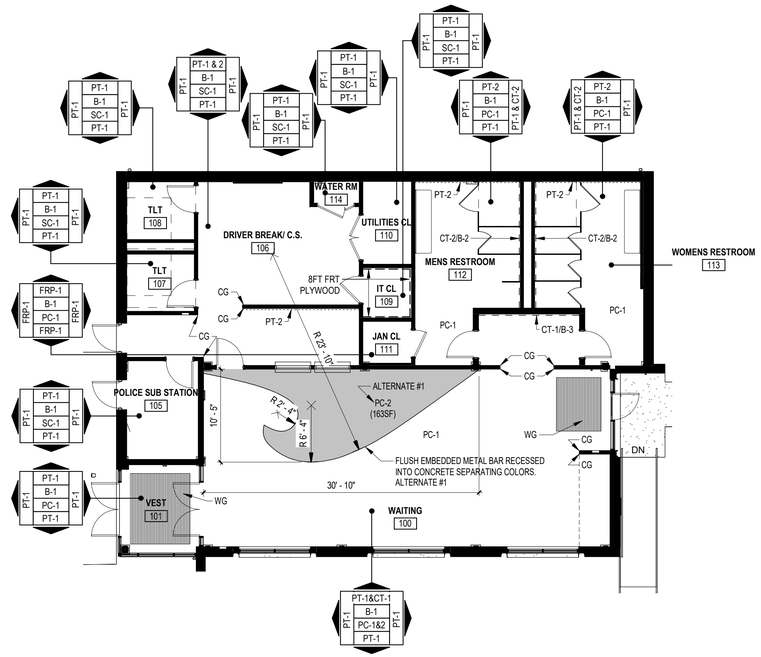

2 FINISH FLOOR PLAN
1/8" = 1'-0"

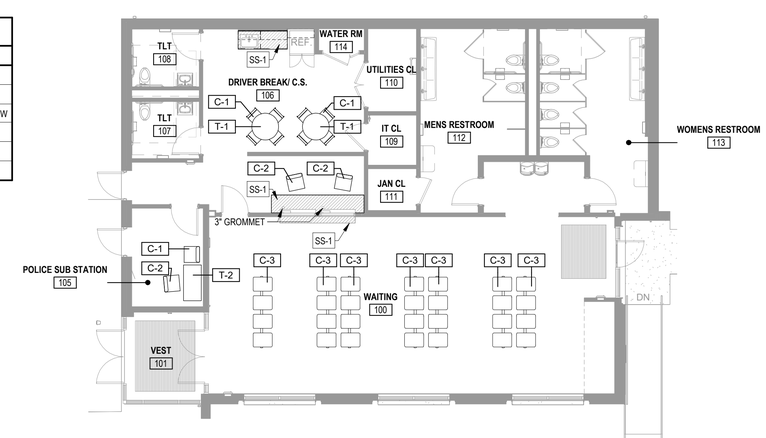

1 FURNIURE PLAN
1/8" = 1'-0"

ALTERNATES

ALTERNATE #1: DELETE FLOOR COLOR PC-2
ALTERNATE #2: BRICK - FIRST THREE COURSES CHANGE TO PRECAST
ALTERNATE #3: FURNISH AND INSTALL FURNITURE

TRUE NORTH

Architecture Engineering Environmental Land Surveying
BL Companies
355 Research Parkway
Meriden, CT 06450
(203) 630-1406
(203) 630-2615 Fax

PAWTUCKET-CENTRAL FALLS TRANSIT CENTER
300 PINE STREET PAWTUCKET, RI 02860

REVISIONS

NO	DATE	DESCRIPTION

Designed: CR
Drawn: LA
Reviewed: JJ
Project No.: 230115
Date: 04/09/2024
Issued for: CONSTRUCTION DOCUMENTS

Title: FINISH SCHEDULE / FINISH PRODUCT LIST

Sheet No. A800

4/9/2024 4:02:03 PM C:\Users\LAndreianu\Documents\2301115_RIPTA_PassengerFacility_R23_Arch_landreianu.rvt

© 2022 BL COMPANIES, INC. THESE DRAWINGS SHALL NOT BE UTILIZED BY ANY PERSON, FIRM OR CORPORATION WITHOUT THE SPECIFIC WRITTEN PERMISSION OF BL COMPANIES.

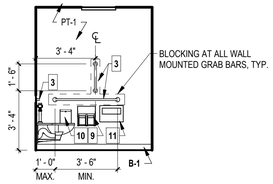

13 INTERIOR ELEVATION
1/4" = 1'-0"

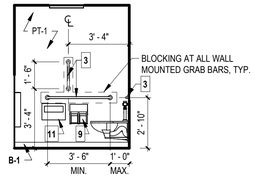

12 INTERIOR ELEVATION
1/4" = 1'-0"

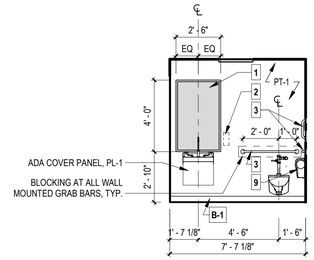

11 INTERIOR ELEVATION
1/4" = 1'-0"

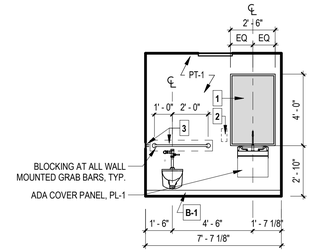

10 IINTERIOR ELEVATION
1/4" = 1'-0"

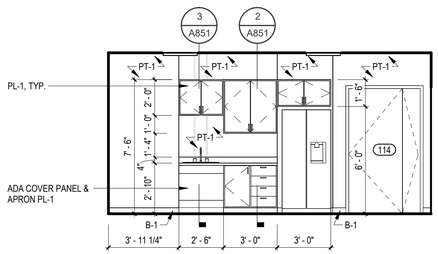

9 INTERIOR ELEVATION
1/4" = 1'-0"

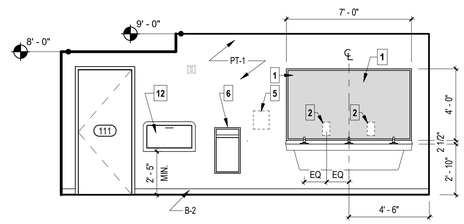

8 INTERIOR ELEVATION
1/4" = 1'-0"

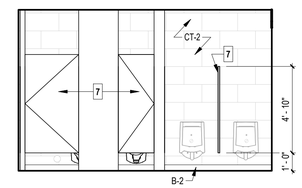

7 INTERIOR ELEVATION
1/4" = 1'-0"

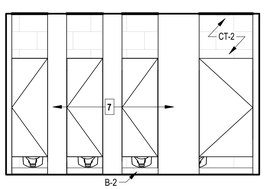

6 INTERIOR ELEVATION
1/4" = 1'-0"

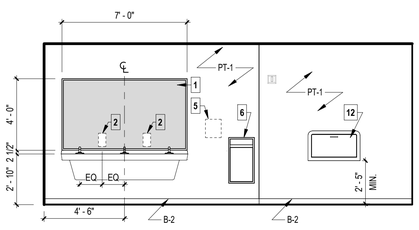

5 INTERIOR ELEVATION
1/4" = 1'-0"

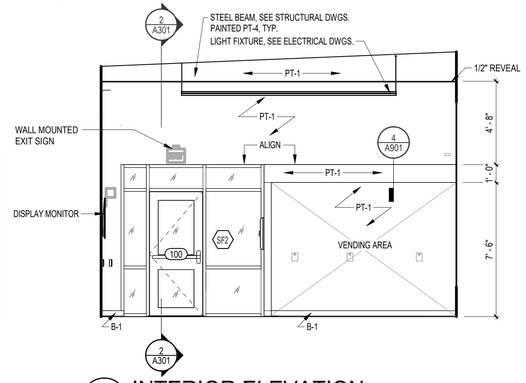

4 INTERIOR ELEVATION
1/4" = 1'-0"

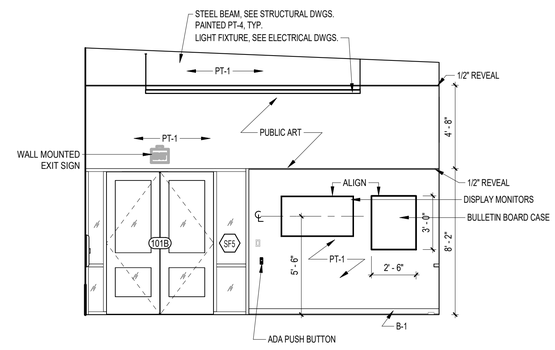

3 INTERIOR ELEVATION
1/4" = 1'-0"

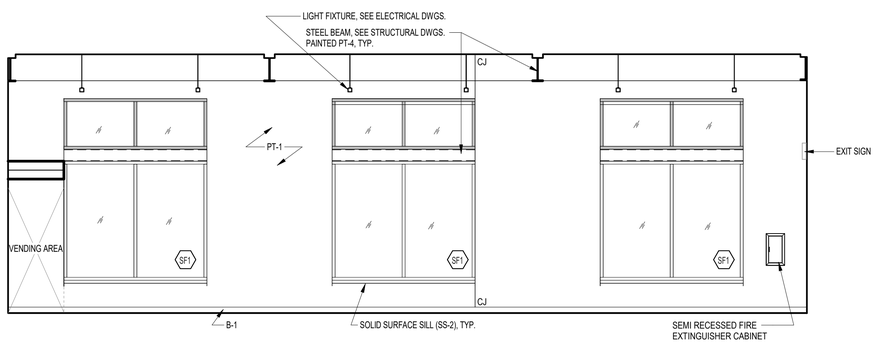

2 INTERIOR ELEVATION
1/4" = 1'-0"

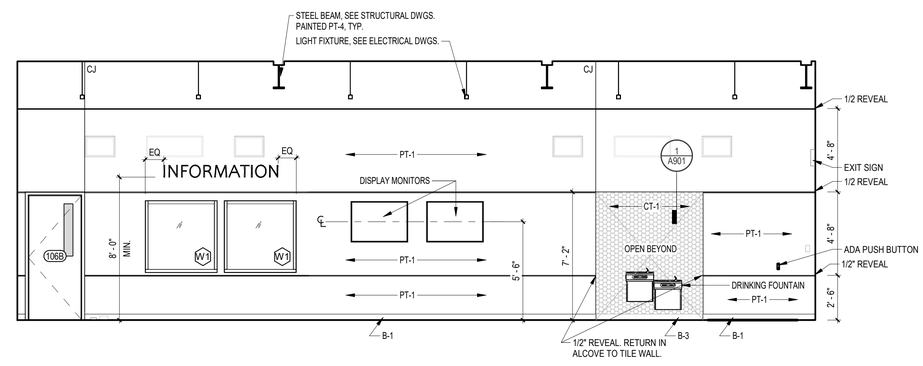

1 INTERIOR ELEVATION
1/4" = 1'-0"

TOILET ACCESSORIES

TAG	ITEM	MANUFACTURER	MODEL #
1	MIRROR	BOBRICK	B-290 SERIES
2	LIQUID-SOAP DISPENSER	FBO/IBO	
3	GRAB BAR (HORIZONTAL 36", 42", VERTICAL 18")	BOBRICK	B-6806.99
4	MOP AND BROOM HOLDER	BOBRICK	B-223
5	PAPER TOWEL DISPENSER	FBO/IBO	
6	RECESSED WASTE RECEPTACLE	BOBRICK	B-3644
7	COMPARTMENT STALL & URINAL SCREEN	BOBRICK	
8	COAT HOOK	BOBRICK	B-542
9	TOILET PAPER DISPENSER	BOBRICK	B-2888
10	SANITARY NAPKIN DISPOSAL	BOBRICK	B-270
11	SURFACE MOUNTED SEAT-COVER DISPENSER	BOBRICK	B-221
12	CHANGING STATION	KOALA KARE	KB300

ALTERNATES

ALTERNATE #1: DELETE FLOOR COLOR PC-2
ALTERNATE #2: BRICK - FIRST THREE COURSES CHANGE TO PRECAST
ALTERNATE #3: FURNISH AND INSTALL FURNITURE

Architecture
Engineering
Environmental
Land Surveying
BL Companies
355 Research Parkway
Meriden, CT 06450
(203) 630-1406
(203) 630-2615 Fax

CHRISTEN M. ROBBINS
No. 3858
REGISTERED ARCHITECT

PAWTUCKET-CENTRAL FALLS TRANSIT CENTER
300 PINE STREET PAWTUCKET, RI 02860

REVISIONS

NO	DATE	DESCRIPTION

Designed:	CR
Drawn:	LA
Reviewed:	JJ
Project No.:	230115
Date:	04/09/2024

Issued for:
CONSTRUCTION DOCUMENTS

Title:
INTERIOR ELEVATIONS

Sheet No.
A801

4/10/2024 12:54:11 PM C:\Users\LAndreianu\Documents\2301115_RIPTA_PassengerFacility_R23_Arch_landreianu.rvt

© 2022 BL COMPANIES, INC. THESE DRAWINGS SHALL NOT BE UTILIZED BY ANY PERSON, FIRM OR CORPORATION WITHOUT THE SPECIFIC WRITTEN PERMISSION OF BL COMPANIES.

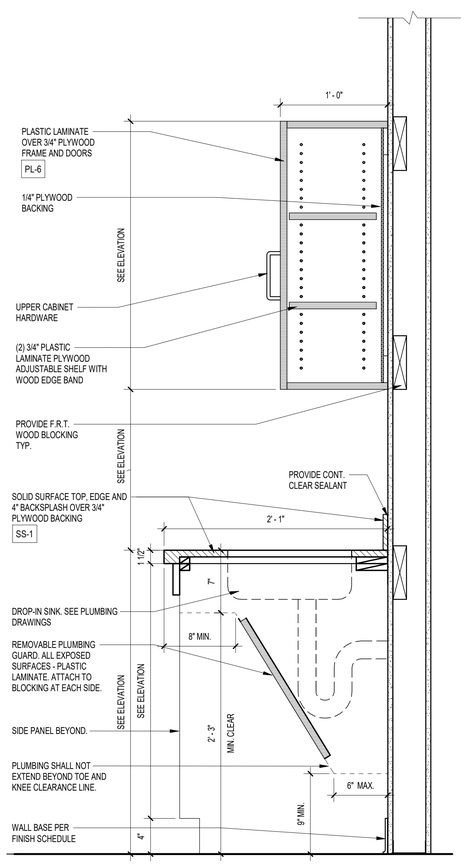

3 CASEWORK DETAIL (SINK)
1 1/2" = 1'-0"

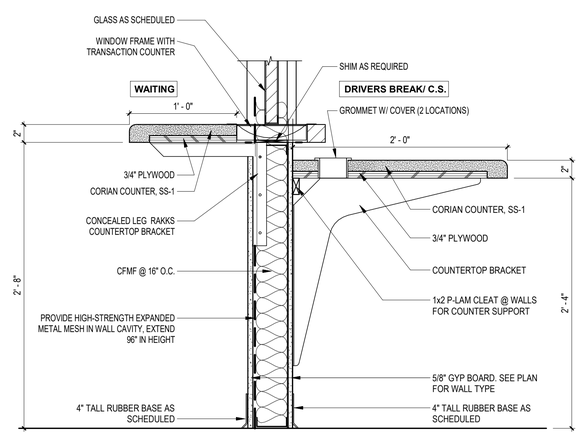

2 C.S. COUNTER - KNEE SPACE
1 1/2" = 1'-0"

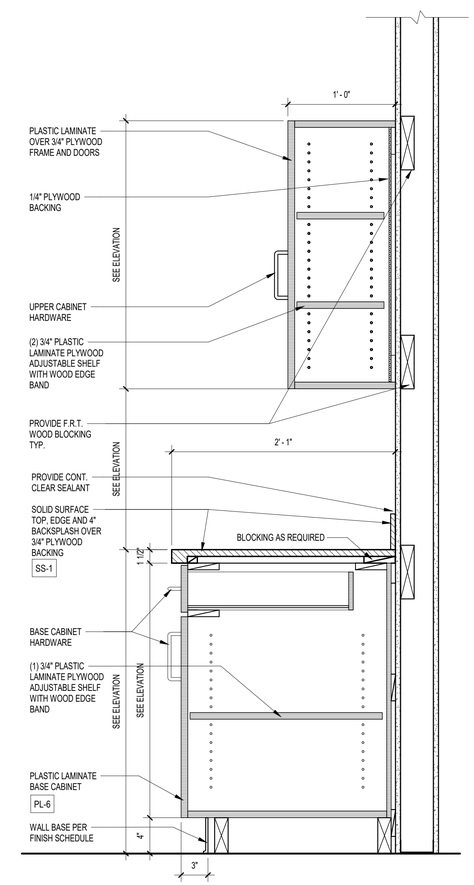

1 CASEWORK DETAIL
1 1/2" = 1'-0"

Architecture
Engineering
Environmental
Land Surveying
BL Companies

355 Research Parkway
Meriden, CT 06450
(203) 630-1406
(203) 630-2615 Fax

CHRISTEN M. ROBINS
No. 18-1
REGISTERED ARCHITECT

PAWTUCKET-CENTRAL FALLS TRANSIT CENTER
300 PINE STREET PAWTUCKET, RI 02860

REVISIONS

NO	DATE	DESCRIPTION

Designed:	CR
Drawn:	LA
Reviewed:	JJ
Project No.:	230115
Date:	04/09/2024

Issued for:
CONSTRUCTION DOCUMENTS

Title:
CASEWORK DETAILS

Sheet No.
A851

4/9/2024 4:02:06 PM C:\Users\LAndreianu\Documents\2301115_RIPTA_PassengerFacility_R23_Arch_landreianu.rvt

© 2022 BL COMPANIES, INC. THESE DRAWINGS SHALL NOT BE UTILIZED BY ANY PERSON, FIRM OR CORPORATION WITHOUT THE SPECIFIC WRITTEN PERMISSION OF BL COMPANIES.

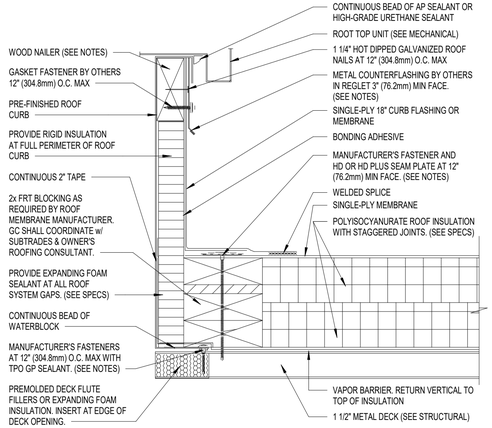

NOTES:
1. REFER TO MANUFACTURER'S INSTALLATION DETAILS FOR ADDITIONAL REQUIREMENTS.
2. REFER TO MANUFACTURER'S DETAILS FOR WELD WIDTH.
3. NAILING AND METAL COUNTERFLASHING ARE NOT REQUIRED IF MEMBRANE IS RUN UP AND OVER CURB WALLS PRIOR TO INSTALLATION OF THE RTU.
4. METAL COUNTERFLASHING SHALL BE 24 GAUGE PRE-FINISHED STEEL OR .032" MIN ALUMINUM FORMED WITH HEMMED LOWER EDGE MOUNTED TIGHTLY TO UNDERSIDE OF MECHANICAL UNIT.
5. MANUFACTURER'S FASTENERS WITH GP SEALANT OVER FASTENER HEADS. GP SEALANT ALSO REQUIRED ALONG ENTIRE EDGE OF CURB FLANGE.
6. BONDING ADHESIVE REQUIRED BETWEEN MEMBRANE AND INSULATION FOR FULLY ADHERED SYSTEMS.
7. WHEN REINFORCEMENT OF TPO MEMBRANE IS EXPOSED, REFER TO MANUFACTURER'S DETAILS FOR CUT EDGE SEALANT APPLICATION.
8. INSTALL METAL WORK IN ACCORDANCE WITH CURRENT SMACNA RECOMMENDATIONS.
9. TOP OF CURB SHALL BE LEVEL.

11 ROOF TOP UNIT CURB
12" = 1'-0"

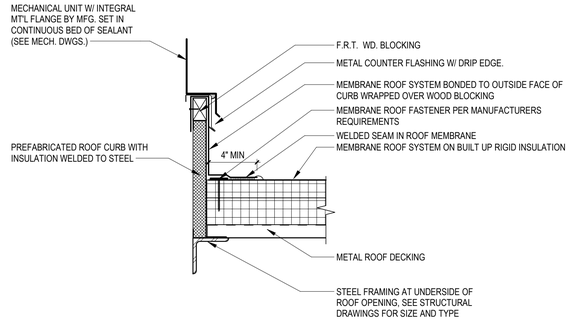

13 PREFABRICATED CURB WELDED
1 1/2" = 1'-0"

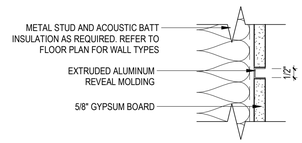

12 TYPICAL REVEAL DETAIL
3" = 1'-0"

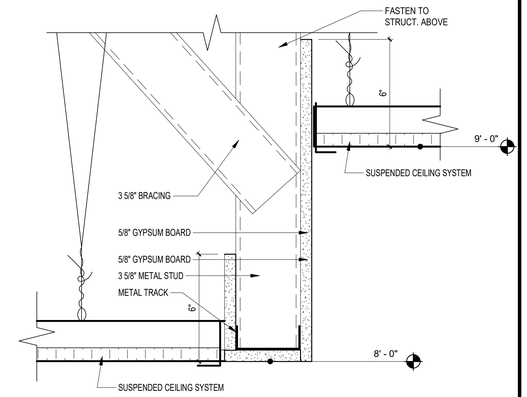

3 SOFFIT DETAIL
3" = 1'-0"

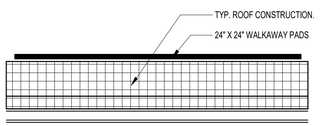

10 TRAFFIC PADS
1 1/2" = 1'-0"

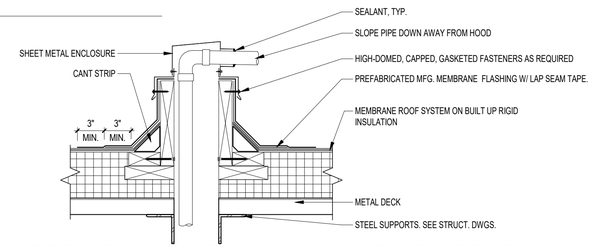

14 ROOFTOP WEATHERPROOF PIPING PENETRATION
1 1/2" = 1'-0"

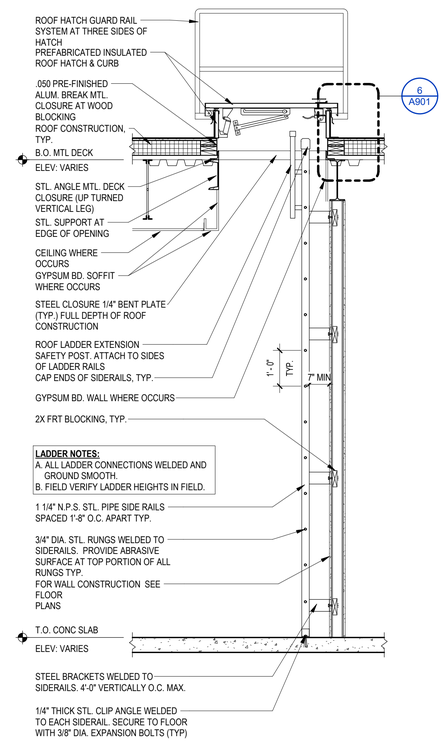

5 ROOF ACCESS HATCH AND LADDER
1/2" = 1'-0"

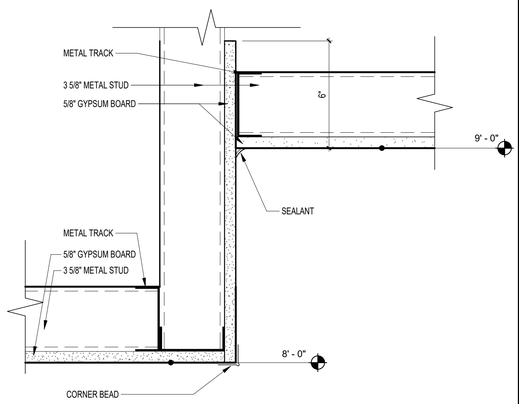

2 SOFFIT DETAIL
3" = 1'-0"

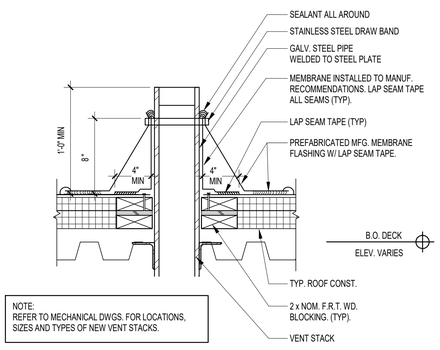

NOTE:
REFER TO MECHANICAL DWGS. FOR LOCATIONS, SIZES AND TYPES OF NEW VENT STACKS.

9 VENT STACK DETAIL
1 1/2" = 1'-0"

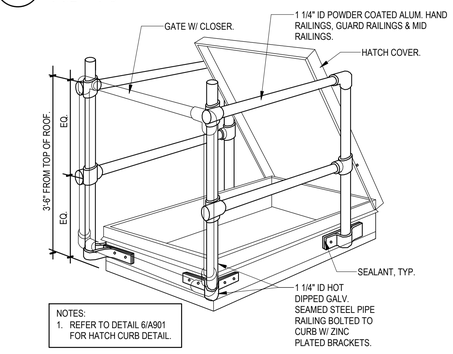

NOTES:
1. REFER TO DETAIL 6/A901 FOR HATCH CURB DETAIL.

7 ROOF HATCH RAIL
1 1/2" = 1'-0"

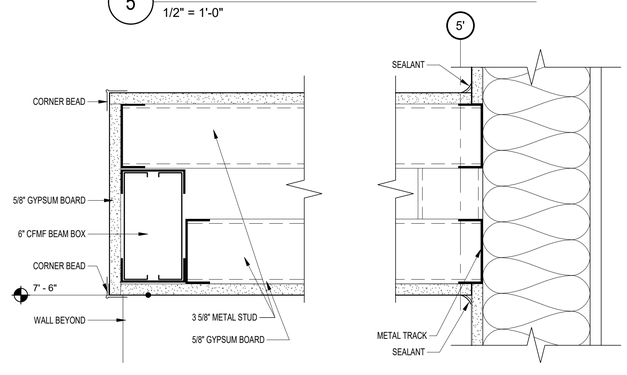

4 SECTION AT VENDING AREA
3" = 1'-0"

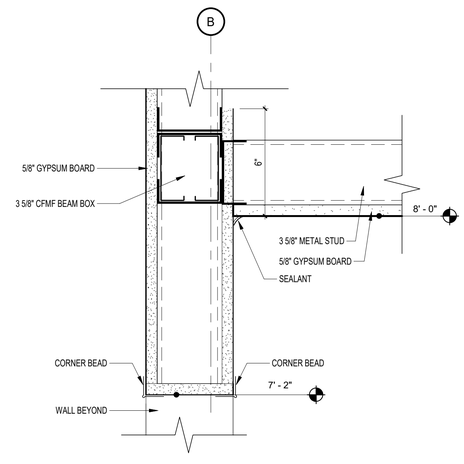

1 SOFFIT DETAIL
3" = 1'-0"

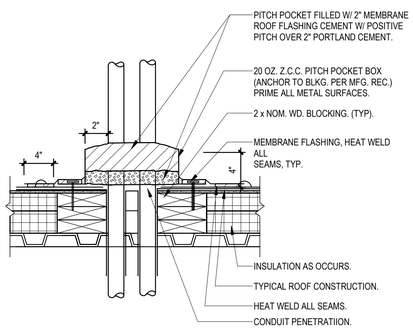

8 PITCH POCKET DETAIL
1 1/2" = 1'-0"

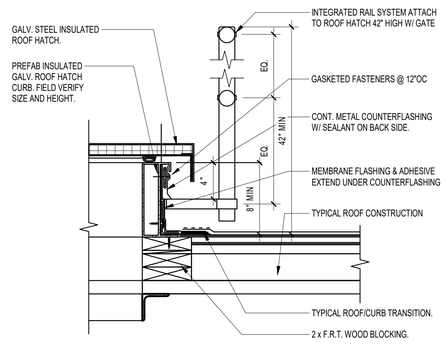

6 ROOF ACCESS HATCH
1 1/2" = 1'-0"

Architecture
Engineering
Environmental
Land Surveying
BL Companies
355 Research Parkway
Meriden, CT 06450
(203) 630-1406
(203) 630-2615 Fax

CHRISTEN M. ROBINS
REGISTERED ARCHITECT

PAWTUCKET-CENTRAL FALLS TRANSIT CENTER
300 PINE STREET PAWTUCKET, RI 02860

REVISIONS

NO	DATE	DESCRIPTION

Designed:	CR
Drawn:	LA
Reviewed:	JJ
Project No.:	230115
Date:	04/09/2024

Issued for:
CONSTRUCTION DOCUMENTS

Title:
MISCELLANEOUS DETAILS

Sheet No.
A901

4/9/2024 4:02:07 PM C:\Users\LAndreianu\Documents\23011115_RIPTA_PassengerFacility_R23_Arch_landreianu.rvt

© 2022 BL COMPANIES, INC. THESE DRAWINGS SHALL NOT BE UTILIZED BY ANY PERSON, FIRM OR CORPORATION WITHOUT THE SPECIFIC WRITTEN PERMISSION OF BL COMPANIES.

FIRE ALARM APPLICABLE CODES AND STANDARDS:

THE 2018 INTERNATIONAL BUILDING CODE WITH STATE OF RHODE ISLAND AMENDMENTS.

THE 2020 NATIONAL ELECTRICAL CODE.

NFPA 72, NATIONAL ELECTRICAL CODE , CURRENT VERSION WITH STATE OF RHODE ISLAND AMENDMENTS.

BUILDING DEPARTMENT NOTES:

THIS PLAN IS APPROVED ONLY FOR THE WORK INDICATED ON THE APPLICATION SPECIFICATION SHEET. ALL OTHER MATTERS SHOWN ARE NOT TO BE RELIED UPON, OR TO BE CONSIDERED AS EITHER BEING APPROVED OR IN ACCORDANCE WITH APPLICABLE CODES. THIS PLAN IS FILED FOR FIRE ALARM SYSTEM ONLY.

ABBREVIATIONS:

AFF	ABOVE FINISHED FLOOR
AWG	AMERICAN WIRE GAUGE
AHJ	AUTHORITY HAVING JURISDICTION
CLG	CEILING
C	CONDUIT, CLOSE, CONTROL
dB	DECIBEL
DTL	DETAIL
DIA	DIAMETER
DIM	DIMENSION
DIV	DIVISION
DN	DOWN
DWG	DRAWING
EA	EACH
EMT	ELECTRICAL METALLIC TUBING
EOR	ENGINEER ON RECORD
FF	FINISH FLOOR
FA	FIRE ALARM
FACP	FIRE ALARM CONTROL PANEL
FMC	FLEXIBLE METAL CONDUIT
FT	FOOT, FEET
FBO	FURNISHED BY OTHERS
HOA	HAND OFF AUTO
HH	HANDHOLE
HT	HEIGHT
ID	IDENTIFICATION
IN	INCH, INCHES
IMC	INTERMEDIATE METAL CONDUIT
LED	LIGHT EMITTING DIODE
LV	LOW VOLTAGE
mA	MILLIAMPERES
MIN	MINIMUM
MISC	MISCELLANEOUS
NEC	NATIONAL ELECTRIC CODE
N/A	NOT APPLICABLE
N.I.C.	NOT IN CONTRACT
NTS	NOT TO SCALE
PNL	PANEL
PH	PHASE
PVC	POLY-VINYL-CHLORIDE
PWR	POWER
PS	PRESSURE SWITCH
QTY	QUANTITY
REF	REFERENCE
RFI	REQUEST FOR INFORMATION
REQD	REQUIRED
RM	ROOM
SHT	SHEET
SIM	SIMILAR
SPKR	SPEAKER
STD	STANDARD
TBD	TO BE DETERMINED
TYP	TYPICAL
UG	UNDERGROUND
UL	UNDERWRITERS LABORATORIES
UPS	UNINTERRUPTIBLE POWER SUPPLY
UON	UNLESS OTHERWISE NOTED
VFD	VARIABLE FREQUENCY DRIVE
VRFY	VERIFY
V	VOLTS, VOLTAGE
WP	WEATHERPROOF
WG	WIRE GUARD

DESIGN CRITERIA TABLE FOR FIRE ALARM AUDIBILITY IN VARIOUS SPACE USES

SPACE USES	AVERAGE AMBIENT SOUND LEVEL (dBA)	AVERAGE AMBIENT SOUND LEVEL (dBA)
OPEN WAREHOUSE	30	60 (MIN)
EMPLOYEE AREAS - ASSEMBLY	55	70
EMPLOYEE AREAS BUSINESS	55	70
MECHANICAL/ ELECTRICAL ROOMS	85	100

NOTE:

DESIGNED CRITERIA FOR FIRE ALARM AUDIBILITY IN VARIOUS OCCUPANCIES AS PER APPROVED CERTIFICATE OF OCCUPANCY OR SCHEDULE-A, WHICH COMPLIES WITH LATEST EDITION OF PENNSYLVANIA CODE WHICH STATES: " THE AUDIBLE ALARM NOTIFICATION APPLIANCES SHALL PROVIDE A SOUND PRESSURE LEVEL OF 15 DECIBELS (DBA) ABOVE THE AVERAGE AMBIENT SOUND LEVEL OR 5 DBA ABOVE THE MAXIMUM SOUND LEVEL HAVING A DURATION OF AT LEAST 60 SECONDS, WHICHEVER IS GREATER, IN EVERY OCCUPIABLE SPACE WITHIN THE BUILDING. "THE MAXIMUM SOUND PRESSURE LEVEL FOR AUDIBLE ALARM NOTIFICATION APPLIANCES SHALL BE 110 DBA AT THE MINIMUM HEARING DISTANCE FROM THE AUDIBLE APPLIANCE. WHERE THE AVERAGE AMBIENT NOISE IS GREATER THAN 95 DBA, VISIBLE ALARM NOTIFICATION APPLIANCES SHALL BE PROVIDED IN ACCORDANCE WITH NFPA 72 AND AUDIBLE ALARM NOTIFICATION APPLIANCES SHALL NOT BE REQUIRED".

FIRE ALARM SYMBOL LEGEND

SYMBOL	DESCRIPTION
FACP	FIRE ALARM CONTROL PANEL
FAAP	FIRE ALARM ANNUNCIATOR
F	FIRE ALARM MASTER BOX
F	MANUAL PULL STATION
F	COMBINATION AUDIBLE AND VISUAL ALARM DEVICE
F	VISUAL ALARM DEVICE
B	ELECTRIC ALARM BELL FOR SPRINKLER SYSTEM
FS	FLOW SWITCH - FURNISHED & INSTALLED BY OTHERS, WIRED BY DIV. 16.
TS	TAMPER SWITCH - FURNISHED & INSTALLED BY OTHERS, WIRED BY DIV. 16.
PS	PRESSURE SWITCH - FURNISHED & INSTALLED BY OTHERS, WIRED BY DIV. 16.
MM	MONITOR MODULE
CM	CONTROL MODULE
S	SMOKE DETECTOR
H CT	FIXED TEMPERATURE HEAT DETECTOR, 'CT' WHERE SPECIFIED INDICATES MELTABLE ALLOY TYPE FOR COLD TEMPERATURE APPLICATION
H	WALL MOUNTED FIXED TEMPERATURE HEAT DETECTOR.
S R	SMOKE DETECTOR, ELEVATOR RECALL
H R	FIXED TEMPERATURE HEAT DETECTOR, ELEVATOR SHUNT TRIP
H R	WALL MOUNTED FIXED TEMPERATURE HEAT DETECTOR, ELEVATOR SHUNT TRIP
S	DUCT SMOKE DETECTOR - SUPPLY & RETURN
S F	DUCT FIRE/SMOKE DAMPER - SUPPLY & RETURN
SD	SMOKE DAMPER (FBO)
RPTR	FIRE ALARM UHF/VHF RADIO REPEATER
RT	REMOTE TEST SWITCH
KB	KNOX BOX
RTS	DUCT SMOKE DETECTOR TEST SWITCH.

NOTE:

NOT ALL SYMBOLS MAY APPEAR ON THE DRAWINGS.

FIRE ALARM GENERAL NOTES:

1. ALL INSTALLATION WORK SHALL BE COMPLETED BY A LICENSED ELECTRICAL CONTRACTOR, WHO SHALL BE REFERRED TO AS "CONTRACTOR" WHERE REFERENCED ELSEWHERE WITHIN THESE DOCUMENTS. THE NEW FIRE ALARM SYSTEM SHALL FOLLOW THE REQUIREMENTS OF THE 2020 NATIONAL ELECTRICAL CODE.

2. THE CONTRACTOR SHALL BE RESPONSIBLE FOR PROVIDING AND INSTALLING ALL FIRE ALARM SYSTEM COMPONENTS & DEVICES, WIRING, CONDUIT, MOUNTING HARDWARE, SYSTEM TESTING AND TRAINING.

3. THIS PROJECT SHALL INCLUDE THE INSTALLATION OF A NEW ADDRESSABLE FIRE ALARM SYSTEM, FIRE COMMAND STATION, DATA GATHERING PANELS, AMPLIFIER PANELS, ADDRESSABLE INITIATING DEVICES, AND NEW NOTIFICATION DEVICES AS SHOWN ON THE DRAWINGS AND INDICATED BELOW. IN ADDITION, THIS CONTRACTOR SHALL BE RESPONSIBLE FOR COORDINATING WITH OTHER TRADES FOR INTERCONNECTION TO OTHER BUILDING SYSTEMS (IE: HVAC, FIRE PROTECTION, ELECTRICAL, ETC.).

4. THE NEW ADDRESSABLE INITIATION DEVICES AND NEW NOTIFICATION DEVICES SHALL BE CONNECTED TO THE APPROPRIATE FAS CIRCUITS AT THE FIRE COMMAND STATION/DATA GATHERING PANEL SERVING EACH PORTION OF THE BUILDING. PROVIDE AND INSTALL END OF LINE DEVICES AS REQUIRED. INSTALL LINE ISOLATION MODULES FOR EVERY 30 DEVICES ON EACH ADDRESSABLE INITIATING CIRCUIT. EXACT LOCATIONS OF ISOLATION MODULES SHALL BE DETERMINED IN THE FIELD, DOCUMENTED AND LABELED AS SUCH.

5. ALL FIRE ALARM LOW VOLTAGE WIRING SHALL BE CERTIFIED TEFLON JACKETED FIRE ALARM CABLE WHICH MEETS THE REQUIREMENTS OF THE LOCAL BUILDING FIRE CODE. FIRE ALARM CABLE MAY BE INSTALLED UNPROTECTED BY CONDUIT WHEN CONCEALED FROM VIEW, PROTECTED BY THE BUILDING CONSTRUCTION. WHEN CONDUITS RUN WITHIN 8 FT. OF FINISHED FLOOR, THE CONDUIT SHALL BE RIGID GALVANIZED STEEL. PROVIDE APPROVED FIRE STOPPING MATERIAL FOR ALL FLOOR, WALL AND BARRIER PENETRATIONS TO MAINTAIN FIRE/SMOKE RATINGS. ALL FAS CONDULETS, JUNCTION BOXES AND TERMINAL BOXES SHALL BE PAINTED FIRE DEPARTMENT RED, IN ACCORDANCE WITH CODE.

6. BACKUP POWER SUPPLY SHALL BE PROVIDED FOR THE FIRE ALARM SYSTEM. BACKUP POWER SUPPLY SHALL BE CAPABLE OF PROVIDING 24 HOURS OF SUPERVISION OF ALL SYSTEM COMPONENTS AND DEVICES FOLLOWED BY 45 MINUTES OF FULL LOAD OPERATION OF THE SYSTEM.

7. DURING INSTALLATION THE ELECTRICAL CONTRACTOR SHALL TEST ALL WIRING FOR INTEGRITY (CONDUCTOR TO CONDUCTOR/CONDUCTOR TO GROUND) AFTER EACH PHASE OF WORK AFTER ALL EQUIPMENT IS COMPLETELY INSTALLED, TESTED AND OPERATIONAL, THE FCS SHALL BE PROGRAMMED AND ALL TRANSPONDER PANELS SHALL BE TESTED AND THE WIRING RE-TESTED FOR INTEGRITY.

8. THE CONTRACTOR SHALL PROVIDE, PROGRAM AND INSTALL ALL DEVICES, EQUIPMENT, AND WIRING NECESSARY TO TRANSMIT ALL FIRE ALARM, SUPERVISORY AND TROUBLE SIGNALS TO AN APPROVED CENTRAL STATION MONITORING STATION STATION SERVICE. CONDITIONS TO BE RE-TRANSMITTED INCLUDE BUT ARE NOT LIMITED TO THE FOLLOWING: BOOSTER PUMP STATUS, MANUAL PULL STATION ALARM, SMOKE DETECTION ALARM, TROUBLE, SUPERVISORY, AND WATERFLOW. THE DACT SHALL BE SIZED FOR A MINIMUM OF 20 POINTS FOR FUTURE BUILDING EXPANSION. PRIOR TO INSTALLATION COORDINATE WITH OWNER. REQUIRED TELEPHONE NUMBERS SHALL BE PROVIDED BY OWNER. ALL TELEPHONE WIRE AND RGS CONDUIT SHALL BE PART OF THIS CONTRACT.

9. FIRE ALARM SYSTEM (120VAC) POWER SHALL BE TAPPED AHEAD OF THE MAIN SERVICE SWITCHES AND PROVIDED WITH A FUSED DISCONNECT SWITCH. CONTRACTOR SHALL PROVIDE AND INSTALL ALL WIRING AND CONDUIT REQUIRED TO INTERFACE TO THE MAIN POWER SUPPLY. POWER GAUGE AND OVERCURRENT PROTECTION SHALL BE SIZED AND COORDINATED ACCORDING TO EQUIPMENT'S REQUIREMENTS. DOUBLE FUSING AT THE SAME VOLTAGE AND AMPERAGE IS PROHIBITED. FUSES SHALL BE LOCATED WITHIN (5) FEET OF THE TAP. THE FIRE ALARM SYSTEM SHALL BE INDEPENDENTLY GROUNDED THROUGH AN APPROVED MEANS.FIRE ALARM GROUNDING ELECTRODE CONDUCTOR SHALL BE CONNECTED DIRECTLY TO THE COLD WATER PIPE. EXACT LOCATION TO BE DETERMINED BY CONTRACTOR. ALL POWER WIRING SHALL BE INSTALLED IN RIGID GALVANIZED STEEL (RGS) CONDUIT IN ALL AREAS.

10. THE CONTRACTOR IS RESPONSIBLE FOR FOLLOWING ALL APPLICABLE RHODEISLAND STATE ELECTRICAL CODES FOR POWER AND FIRE ALARM SYSTEM WIRING, CONDUCTORS, TERMINATIONS, GROUNDS, LABELING, CONDUCTOR INSULATION, CONDUCTOR COLOR CODING, RACEWAY INSTALLATION, RACEWAY COLOR CODING, DISCONNECT INSTALLATION, DISCONNECT COLOR CODING, AND ALL OTHER NYC CODES, RULES, REGULATIONS, BULLETINS, AND STANDARDS.

11. WALL MOUNTED HORNS SHALL BE INSTALLED BETWEEN 80" AND 96" O.C. AFF. CEILING MOUNTED HORNS SHALL NOT BE INSTALLED ABOVE 20 FT. PROVIDE ADEQUATE WATT TAPPING TO MEET 15 DBA ABOVE AVERAGE AMBIENT SOUND LEVELS.

12. THE NUMBER OF NOTIFICATION AND SIGNALING CIRCUITS SHALL BE DETERMINED BY CONTRACTOR BASED ON CALCULATIONS RELATED TO CABLE RESISTANCE AND CAPACITANCE. PROVIDE SYNCHRONIZED VISUAL ALARM STROBES ON ALL FLOORS AS SHOWN ON THE DRAWINGS. PROVIDE MULTIPLE STROBE CIRCUITS PER FLOOR AND SYNCHRONIZATION MODULES AS REQUIRED. INSTALL CIRCUITS IN 'A', 'B', 'C', 'D' LOOP(S) ARRANGEMENT. ALL VISUAL DEVICES WITHIN THE FIELD OF VIEW SHALL BE SYNCHRONIZED.

13. PROVIDE COMBINATION HORN/STROBES DEVICE AS SHOWN ON DRAWINGS. INSTALL DEVICES BETWEEN 80" AND 96" O.C. AFF OR 6" O.C. BELOW CEILING WHICHEVER IS LOWER WHERE WALL MOUNTED DEVICES ARE INDICATED. PROVIDE CEILING MOUNTED DEVICES WHERE INDICATED.

14. PROVIDE ADDRESSABLE MANUAL PULL STATIONS AS SHOWN ON DRAWINGS. INSTALL STATIONS AT 4 FT. AFF TO THE HANDLE OF STATION. STATIONS SHALL BE CONNECTED TO THE ADDRESSABLE CIRCUIT SERVING THE FLOOR. ALL MANUAL STATIONS SHALL BE DOUBLE-ACTION TYPE.

15. THE CONTRACTOR SHALL DESIGN BUILD THE NEW POWER RISER IN CONFORMANCE WITH THE POWER DEMANDS OF THE NEW PANELS AS DETERMINED BY THE FIRE ALARM REQUIREMENTS OF THE FIELD CONDITIONS AND THE MANUFACTURER. THE NUMBER OF FIRE ALARM PANELS IDENTIFIED IN THIS CONCEPT DOCUMENT IS INTENDED TO BE A MINIMUM NUMBER OF PANELS. ADDITIONAL PANELS MAY BE REQUIRED BASED UPON MANUFACTURER REQUIREMENTS AND SHALL BE PROVIDED IN THE CONTRACTORS BASE PRICE.

16. NEW POWER RISER SHALL BE REQUIRED AND ABLE TO HAVE THE CAPACITY TO ACCOMMODATE MAIN FIRE COMMAND STATION, BOOSTER POWER SUPPLY AND DATA GATHERING PANELS, AND ALL ASSOCIATED COMPONENTS. QUANTITY OF FIRE ALARM COMPONENTS SHOWN ON THE CONCEPTUAL RISER IS A MINIMAL REPRESENTATION OF SYSTEM REQUIREMENTS AND TO BE USED ONLY AS A REFERENCE POINT. SYSTEM AMPLIFIERS SHALL BE A DISTRIBUTED AND FLOOR SPEAKER CIRCUITS SHALL BE IDENTIFIED AND CONNECTED TO THE NEW AMPLIFIERS.

17. CONTRACTOR SHALL DETERMINE THE MEANS OF ROUTING THE NEW CONDUCTORS TO/FROM EACH NEW PANEL, CONTROL WIRING, INITIATING DEVICES AND NOTIFICATION APPLIANCES.

18. ALL DEVICES SHALL BE SUITABLE FOR THE INTENDED ENVIRONMENT. ALL AREAS WHERE THE TEMPERATURE MAY BE LESS THAN 32°F OR MORE THAN 100°F NON ADDRESSABLE DEVICES SHALL BE USED WITH ADDRESSABLE MONITOR MODULES LOCATED IN THE CLOSEST ENVIRONMENTALLY CONTROLLED LOCATION. OUTDOOR DEVICES AND APPLIANCES SHALL BE LISTED FOR SUCH OR ENCASED IN NEMA 4 WEATHER PROOF ENCLOSURES. SMOKE DETECTORS SHALL BE PLACED AT LEAST 36 INCHES FROM SUPPLY REGISTERS.

19. INSTALLATION OF COMPONENTS AND PANELS SHALL MEET THE REQUIRED SPACING (3 FT CLEARANCE) AND ACCESSIBILITY FOR FUTURE SERVICING AND/OR TROUBLESHOOTING. LOCATIONS FOR ALL COMPONENTS (DGP, POWER SUPPLIES, ETC) SHALL BE FIELD VERIFIED AND MEASURED OUT BY THE CONTRACTOR PRIOR TO ANY INSTALLATION.

20. CONTRACTOR SHALL BE RESPONSIBLE FOR AVOIDING ALL CONFLICTS WITH LIGHTING FIXTURES, DIFFUSERS, GRILLS, DUCTS, STRUCTURAL MEMBERS, PIPES AND OTHER OBSTRUCTIONS ENCOUNTERED. SMOKE AND HEAT DETECTORS SHALL NOT BE LOCATED WITHIN 36" OF SUPPLY REGISTERS.

21. ALL FAS COMPONENTS SHALL EACH BE PROVIDED WITH A PERMANENT LABEL INDICATING THE IDENTIFICATION NUMBER FOR THE PANEL (EXAMPLE: DGP#1, DGP#2) AND CLEARLY IDENTIFY THE AREA THAT IS BEING COVERED BY EACH PANEL. THE WIRING LABELING SYSTEM PROPOSED BY THE CONTRACTOR SHALL BE APPROVED BY THE ENGINEER PRIOR TO BEING USED.

22. NO CONDUITS ARE TO ENTER THE TOP OF A FIRE COMMAND STATION PANEL/DATA GATHERING PANEL/STROBE POWER SUPPLY PANEL, REGARDLESS OF SYSTEM TYPE OR SIZE.

23. ALL WIRE SHALL BE IN STEEL CONDUIT WITHIN UNFINISHED AREAS (INCLUDING TUNNELS AND CORRIDORS WITHOUT FINISHED CEILINGS). WHERE CONDUIT IS SUBJECT TO PHYSICAL DAMAGE, ALL CONDUIT BELOW 8 FT SHALL BE RMC AS PER NFPA 70. CONDUIT ABOVE 8 FT SHALL BE ELECTRICAL METAL TUBING (EMT) WITH COMPRESSION FITTINGS. WITHIN FINISHED AREAS ALL EXPOSED CONDUIT SHALL BE SURFACE MOUNTED RACEWAY PAINTED TO MATCH ADJACENT SURFACES. FLEXIBLE METAL CONDUIT (FMC) SHALL BE USED FOR INTERCONNECTIONS TO WATERFLOW AND VALVE TAMPER SWITCHES. LENGTH OF FMC SHALL NOT EXCEED 3 FEET.

24. TELEPHONE LINES FOR CENTRAL STATION CONNECTION FROM MAIN TELEPHONE BLOCK TO THE DIALER SHALL BE INSTALLED IN 3/4" EMT MINIMUM. FLEXIBLE STEEL CONDUIT WILL BE PERMITTED ONLY FOR FINAL CONNECTIONS TO SENSING OR ALARM DEVICES AND LENGTHS NOT EXCEEDING 24" WHERE A RIGID CONNECTION CANNOT BE MADE.

25. ALL NEW FIRE ALARM CABLE SHALL BE RUN PARALLEL AND PERPENDICULAR- NO DIAGONAL RUNS. SUPPORTS SHALL BE PROVIDED EVERY 5'-0" ON CENTER.

26. CONTRACTOR SHALL OBSERVE ALL POLARITY ON ALL FIRE ALARM CIRCUITS. NO TEE TAPPING IS PERMITTED ON FIRE ALARM CIRCUITS.

27. ALL FIRE ALARM CONDUCTOR TERMINATIONS SHALL BE WITHIN JUNCTION BOXES, DEVICE BACKBOXES, TERMINAL CABINETS, CONTROL PANELS OR OTHER SUITABLE METAL ENCLOSURES.

28. ALL TERMINATIONS ARE TO BE SUPERVISED BY MANUFACTURER'S REPRESENTATIVE PRIOR TO POWERING EQUIPMENT.

29. THE CONTRACTOR SHALL IDENTIFY THE LOCATION AND QUANTITIES OF JUNCTION BOXES, TERMINAL BOXES, SPARE CONDUCTORS, COLOR CODING OF CONDUCTORS, SPLICES, DEVICE BACKBOXES, AND TERMINAL STRIPS. THESE DRAWINGS SHALL INCLUDE A SCHEDULE OF ALL CONNECTIONS/TERMINALS, INDEXED BY JUNCTION BOX, DEVICE BACKBOX AND TERMINAL STRIP AND SHALL REFERENCE WIRE IDENTIFICATION TAPED NUMBERS AS INSTALLED AT EACH TERMINATION OR INTERCONNECTION.

30. ALL WIRES IN A PULL BOX CONTAINING MORE THAN TWO WIRES SHALL BE LABELED.

31. ALL CIRCUITS SHALL BE SUPERVISED. ALL SHIELDS TO BE CONTINUOUS AND ISOLATED FROM GROUND.

32. ALL WORK, WIRING, CONDUIT AND EQUIPMENT INSTALLATIONS SHALL MEET ALL APPLICABLE CODES REFERENCED IN BID SPECIFICATIONS AND SHALL BE CONSISTENT WITH MANUFACTURER'S SPECIFICATIONS. ALL WIRING AND CONDUIT REQUIREMENTS SHALL BE VERIFIED WITH THE FIRE ALARM CONTRACTOR AND MANUFACTURER.

33. ALL DEVICES INSTALLED AS DESCRIBED ABOVE SHALL BE PROGRAMMED, TESTED AND MADE FULLY OPERATIONAL AT THE FACP TO IMPLEMENT THE FIRE MANAGEMENT SEQUENCE OF OPERATION AS DESCRIBED IN THE DRAWINGS AND SPECIFICATIONS. THE ENTIRE FIRE ALARM SYSTEM SHALL BE TESTED IN ACCORDANCE WITH NFPA-72 (CHAPTER 7 INSPECTION, TESTING AND MAINTENANCE). THE CONTRACTORS SHALL BE RESPONSIBLE FOR COMMISSIONING A PRE-TEST PRIOR TO FDNY INSPECTION.

34. CONTRACTOR SHALL COORDINATE ALL TESTING WITH THE OWNER AND THE ENGINEER.

35. CORRECTIVE MAINTENANCE: NECESSARY REPAIRS AND/OR REPROGRAMMING FOR DEFICIENT OR INOPERABLE DEVICES SUCH AS THOSE FOUND DURING THE COURSE OF TESTING, INSPECTION, OR HAVE FAILED DURING OPERATION WILL BE PROVIDED BY CONTRACTOR.

36. CONTRACTOR SHALL SUBMIT THE REQUEST FOR FORMAL TEST / INSPECTION AT LEAST 15 DAYS PRIOR TO THE DATE OF THE TEST / INSPECTION IS TO TAKE PLACE. CONTRACTOR SHALL HAVE CONDUCTED A FULL PRETEST OF THE FAS AND ITS COMPONENTS IN ACCORDANCE WITH NFPA 72 AND APPLICABLE CITY REQUIREMENTS, AND SUBMITTED THE NFPA 72 RECORD OF COMPLETION FORM FOR REVIEW PRIOR TO SCHEDULING THE ACCEPTANCE TEST. AN EXPERIENCED TECHNICIAN WITH NICET III CERTIFICATION SHALL BE PRESENT DURING THE ACCEPTANCE TEST. THE ACCEPTANCE TEST SHALL BE CONDUCTED IN THE PRESENCE OF THE OWNER'S REPRESENTATIVE. ANY DEFICIENCIES NOTED SHALL BE CORRECTED AND A NEW RECORD OF COMPLETION FORM AND TEST REPORT SHALL BE PROVIDED TO THE ENGINEER AND OWNER.

37. A STAMPED SET OF APPROVED DRAWINGS SHALL BE AT THE JOB SITE AND SHALL BE USED FOR INSTALLATION. A SECOND SET SHALL BE USED FOR RED LINING AS-BUILT CHANGES.

38. PROJECT CLOSE OUT SHALL CONSIST OF PROVIDING THE FOLLOWING:

38.1. FULLY ADDRESSED AND CORRECT AS-BUILT DRAWINGS SHOWING LOCATION OF ALL NEW WIRING, PANELS AND DEVICES ALONG WITH THEIR ADDRESSES AS PROGRAMMED INTO THE NEW SYSTEM. A HARD COPY AND ELECTRONIC POINTS LIST.

38.2. FULL SYSTEM OPERATIONS AND MAINTENANCE MANUAL INCLUSIVE OF ALL PRODUCT DATA SHEETS, OPERATIONS MANUALS, WIRING DIAGRAMS, SEQUENCE OF OPERATIONS, NFPA MAINTENANCE SCHEDULE, SYSTEM PASSWORDS, COMPLETE SYSTEM PROGRAM INCLUDING BUT NOT LIMITED TO SYSTEMS DEFINITION UTILITY DATABASE APPLICATION (HARD COPY AND ELECTRONIC), WARRANTY, INSTALLER CERTIFICATIONS, NFPA 72 RECORD OF COMPLETION, AND NEW LETTER OF APPROVAL.

38.3. CONTACT AND SCHEDULE TIME TO PROVIDE THREE(3) TRAINING SESSIONS FOR STAFF AND PROVIDE SYSTEM INSTRUCTION GUIDES(HARDCOPY AND ELECTRONIC).

39. STROBE POWER SUPPLY PANELS TO BE LOCATED BY CONTRACTOR.

Architecture
Engineering
Environmental
Land Surveying
BL Companies

355 Research Parkway
Meriden, CT 06450
(203) 630-1406
(203) 630-2615 Fax

DENNIS MICHAEL BURTON
No. 15185
REGISTERED PROFESSIONAL ENGINEER (ELECTRICAL)

PAWTUCKET-CENTRAL FALLS TRANSIT CENTER
300 PINE STREET PAWTUCKET, RI

REVISIONS

NO	DATE	DESCRIPTION

Designed:	PJS
Drawn:	PJS
Reviewed:	DB/GM
Project No.:	2301115
Date:	04/09/2024

Issued for:
CONSTRUCTION DOCUMENTS

Title:
FIRE ALARM NOTES, SYMBOL LEGEND, & ABBREVIATIONS

Sheet No.
FA001

4/4/2024 3:50:03 PM C:\Users\PShah\Documents\2301115_RIPTA_PassengerFacility_R23_MEP_pshahQE5Y4.rvt

© 2022 BL COMPANIES, INC. THESE DRAWINGS SHALL NOT BE UTILIZED BY ANY PERSON, FIRM OR CORPORATION WITHOUT THE SPECIFIC WRITTEN PERMISSION OF BL COMPANIES.

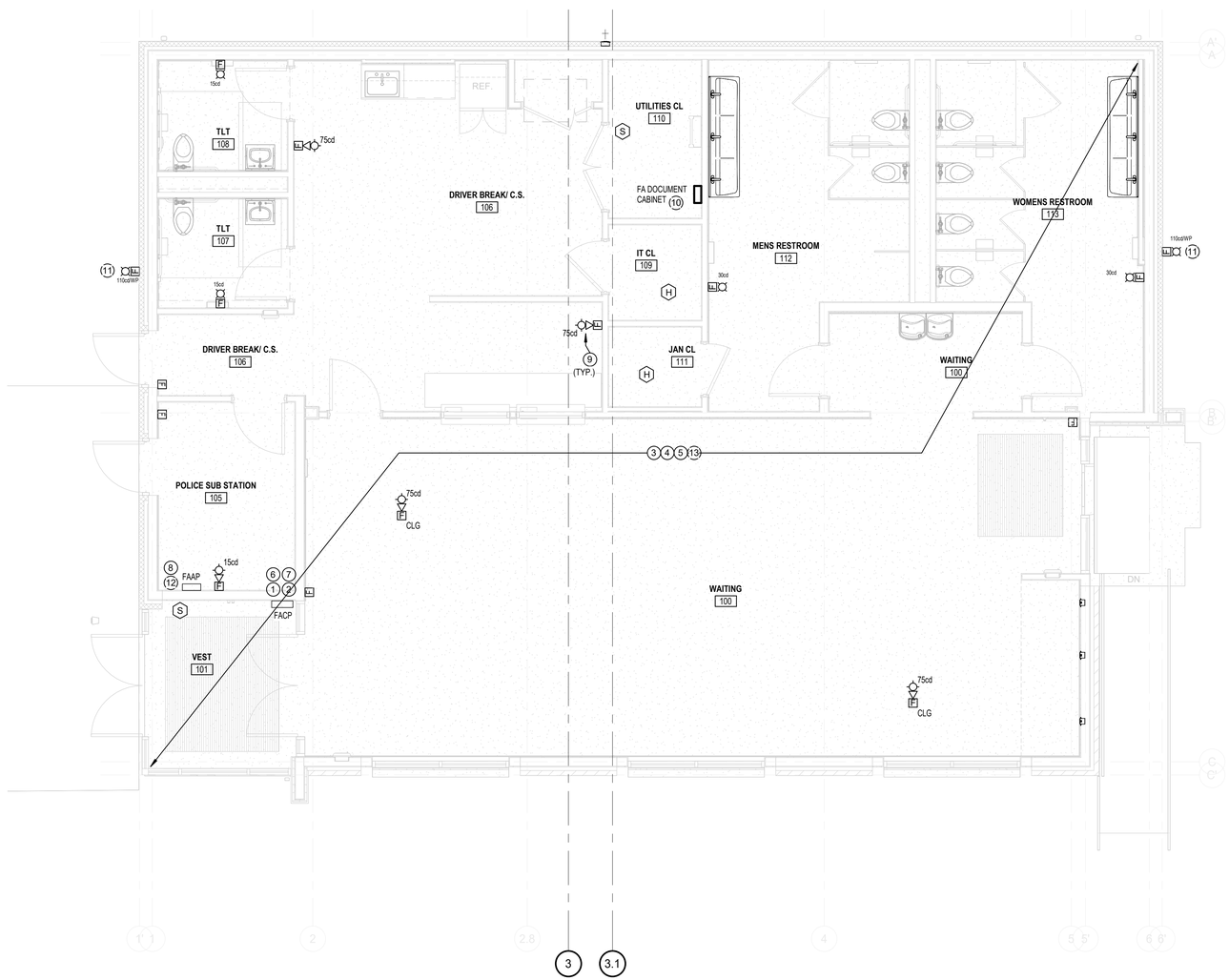

1 FIRE ALARM PLAN - FIRST FLOOR - WORKING

1/4" = 1'-0"

FIRE ALARM PLAN GENERAL NOTES:

1. COORDINATE INSTALLATION OF ALL CEILING MOUNTED DEVICES WITH OTHER TRADES.
2. INSTALL ALL RELAY'S WITHIN THREE FEET OF THE DEVICE BEING CONTROLLED.
3. DO NOT INSTALL ANY SMOKE DETECTOR CLOSER THAN 5 FEET FROM A DIFFUSER OR 12 INCHES FROM A LIGHTING FIXTURE.
4. INSTALL A DUCT MOUNTED SMOKE DETECTOR IN THE SUPPLY AND RETURN DUCT OF ALL HVAC SYSTEMS. CONTRACTOR TO CONFIRM ALL LOCAL MECHANICAL CODE REQUIREMENTS WITH AHJ BEFORE ROUGH IN.
5. ANY FIRE ALARM SYSTEM WIRING SHOWN ON THE PLANS IS FOR REFERENCE ONLY. THE INSTALLING CONTRACTOR SHALL VERIFY EXACT WIRE AND ROUTING REQUIREMENTS PRIOR TO INSTALLATION.
6. COORDINATE ALL LOCATION AND QUANTITY OF SPRINKLER SYSTEM EQUIPMENT, NEW AND/OR EXISTING WITH THE MECHANICAL CONTRACTOR PRIOR TO INSTALLATION.
7. RISER DIAGRAM IS FOR DIAGRAMMATICAL PURPOSES ONLY.CONTRACTOR TO COORDINATE ANY REQUIRED WIRE ROUTING AND ASSOCIATED REQUIREMENTS PRIOR TO INSTALLATION. REFER TO AREA SHEET FOR PROPOSED DEVICE PLACEMENT.

FIRE ALARM PLAN KEY NOTES:

(NOT ALL KEY NOTES ARE INDICATED ON FLOOR PLAN)

1. NEW FIRE ALARM CONTROL PANEL. CONTRACTOR SHALL INSTALL SMOKE DETECTOR WITHIN 5FT OF FACP. CONNECT TO 120VAC. PROVIDED AND INSTALLED BY THE ELECTRICAL CONTRACTOR.INSTALLING CONTRACTOR TO VERIFY LOCATION OF FACP WITH OWNER. THE FACP SHALL BE CAPABLE OF REMOTE MONITORING BY FACILITY MAINTENANCE PERSONAL.
2. NEW FIRE ALARM CONTROL PANEL SHALL USE AN (IP) COMMUNICATION LINE AS THE PRIMARY MEANS OF COMMUNICATION WITH THE FIRE DEPARTMENT AND A CELLULAR COMMUNICATOR AS THE BACKUP MEANS OF COMMUNICATION.
3. CONTRACTOR SHALL INSTALL INITIATING DEVICES IN ACCORDANCE WITH NFPA 72 (ADOPTED EDITION) AND LOCAL BUILDING AND FIRE CODES. CONTRACTOR TO INTERFACE NEW APPLIANCES WITH THE NEW FIRE ALARM SYSTEM.
4. CONTRACTOR SHALL INSTALL NOTIFICATION APPLIANCES IN ACCORDANCE WITH NFPA 72 (ADOPTED EDITION) AND LOCAL BUILDING AND FIRE CODES. CONTRACTOR TO INTERFACE WITH THE NEW FIRE ALARM SYSTEM.
5. CONTRACTOR SHALL COORDINATE LOCATIONS AND QUANTITY OF ALL HVAC UNITS WITH THE MECHANICAL CONTRACTOR. ALL HVAC UNITS THAT EXCEED 2,000 CFM AND/OR ARE REQUIRED BY THE MECHANICAL CODE SHALL BE EQUIPPED WITH DUCT SMOKEDETECTION IN THE SUPPLY DUCT AND ALSO IN THE RETURN DUCT OF UNITS OVER 15,000 CFM (CONTRACTOR TO CONFIRM). IN THE EVENT THAT DUCT DETECTORS ARE NOT PROVIDED BY THE MECHANICAL CONTRACTOR, THE FIRE ALARM CONTRACTOR SHALL INSTALL A DUCT SMOKE DETECTOR, RELAY, AND A KEYED REMOTE TEST SWITCH ON ANY HVAC UNITS EXCEEDING 2,000 CFM (SUPPLY DUCT) AND ALSO IN THE RETURN DUCT OF ANY HVAC UNITS EXCEEDING 15,000 CFM (CONTRACTOR TO CONFIRM).CONFIRM FIRE ALARM REQUIRMENTS WITH AHJ BEFORE ROUGH IN.
6. SLC WIRING. CONNECT NEW INITIATING DEVICES TO SLC CIRCUIT AS REQUIRED. CONTRACTOR SHALL COORDINATE WIRE ROUTING PRIOR TO INSTALLATION.
7. 24VDC WIRING TO NEW FIRE ALARM SYSTEM APPLIANCES. CONNECT NEW 24VDC REQUIRED DEVICES AS NEEDED. CONTRACTOR SHALL COORDINATE WIRE ROUTING PRIOR TO INSTALLATION.
8. ANNUNCIATOR WIRING. CONTRACTOR SHALL COORDINATE NEW FIRE ALARM ANNUNCIATOR REQUIREMENTS PRIOR TO INSTALLATION. CONTRACTOR TO EXTEND 24VDC WIRING TO THE NEW LOCATION(S).
9. NOTIFICATION APPLIANCE WIRING. CONNECT NEW NOTIFICATION APPLIANCES TO THE NEW FIRE ALARM SYSTEM. CONTRACTOR SHALL COORDINATE SYSTEM CALCULATIONS PRIOR TO INSTALLATION. IF REQUIRED, ADDITIONAL FIRE ALARM PANEL AND/OR REMOTE ANCILLARY PANEL EQUIPMENT MAY NEED TO BE INSTALLED. CONTRACTOR SHALL COORDINATE ALL NOTIFICATION APPLIANCE REQUIREMENTS AND EQUIPMENT PRIOR TO INSTALLATION.
10. FIRE ALARM COMMUNICATOR AND DOCUMENT CABINET. CONTRACTOR SHALL COORDINATE EXACT LOCATION(S) OF FIRE ALARM COMMUNICATOR AND DOCUMENT CABINET IN THE FIELD. COORDINATE WITH BUILDING OWNER TO DETERMINE LOCATIONS PRIOR TO BID.
11. PROVIDE WEATHERPROOF AUDIBLE/VISIBLE NOTIFICATION APPLIANCE (HORN/STROBE) SHALL BE INSTALLED ON THE EXTERIOR OF THE BUILDING. PROVIDE ONE NOTIFICATION APPLIANCE FOR EACH RISER. INSTALLATION OF THESE APPLIANCES SHALL BE THE RESPONSIBILITY OF THE FIRE ALARM CONTRACTOR. COORDINATE EXACT LOCATION IN FIELD PRIOR TO ROUGH IN.
12. CONTRACTOR TO PROVIDE AN ANNUNCIATOR PANEL AT A LOCATION THAT IS DEEMED THE MAIN POINT OF FIRE DEPARTMENT ACCESS. THE REMOTE ANNUNCIATOR SHALL BE CAPABLE OF MIMICKING ALL INPUT AND OUTPUT FUNCTIONS OF THE MAIN FACP. THESE CONTROL CAPABILITIES SHALL BE ACCESSIBLE VIA A KEYED SWITCH. ANNUNCIATOR PANELS REQUIRING A CODE TO PERFORM THESE FUNCTIONS SHALL NOT BE ACCEPTABLE.CONTRACTOR TO VERIFY LOCATION OF NEW ANNUNCIATOR PANEL WITH BUILDING OWNER AND LOCAL AHJ.
13. CONTRACTOR TO MONITOR ALL SMOKE DAMPERS IF APPLICABLE. COORDINATE LOCATION(S) AND QUANTITY WITH MEP CONTRACTOR.

N
TRUE NORTH

Architecture
Engineering
Environmental
Land Surveying
BL Companies

355 Research Parkway
Meriden, CT 06450
(203) 630-1406
(203) 630-2615 Fax

DENNIS MICHAEL BURTON
No. 15185
REGISTERED
PROFESSIONAL ENGINEER
(ELECTRICAL)

PAWTUCKET-CENTRAL FALLS TRANSIT CENTER
300 PINE STREET PAWTUCKET, RI

REVISIONS

NO	DATE	DESCRIPTION

Designed:	PJS
Drawn:	PJS
Reviewed:	BP/GM
Project No.:	2301115
Date:	04/09/2024

Issued for:
CONSTRUCTION DOCUMENTS

Title:
OVERALL FIRST FLOOR FIRE ALARM PLAN

Sheet No.
FA101.1

4/4/2024 3:50:04 PM C:\Users\PShah\Documents\2301115_RIPTA_PassengerFacility_R23_MEP_pshahQE5Y4.rvt

© 2022 BL COMPANIES, INC. THESE DRAWINGS SHALL NOT BE UTILIZED BY ANY PERSON, FIRM OR CORPORATION WITHOUT THE SPECIFIC WRITTEN PERMISSION OF BL COMPANIES.

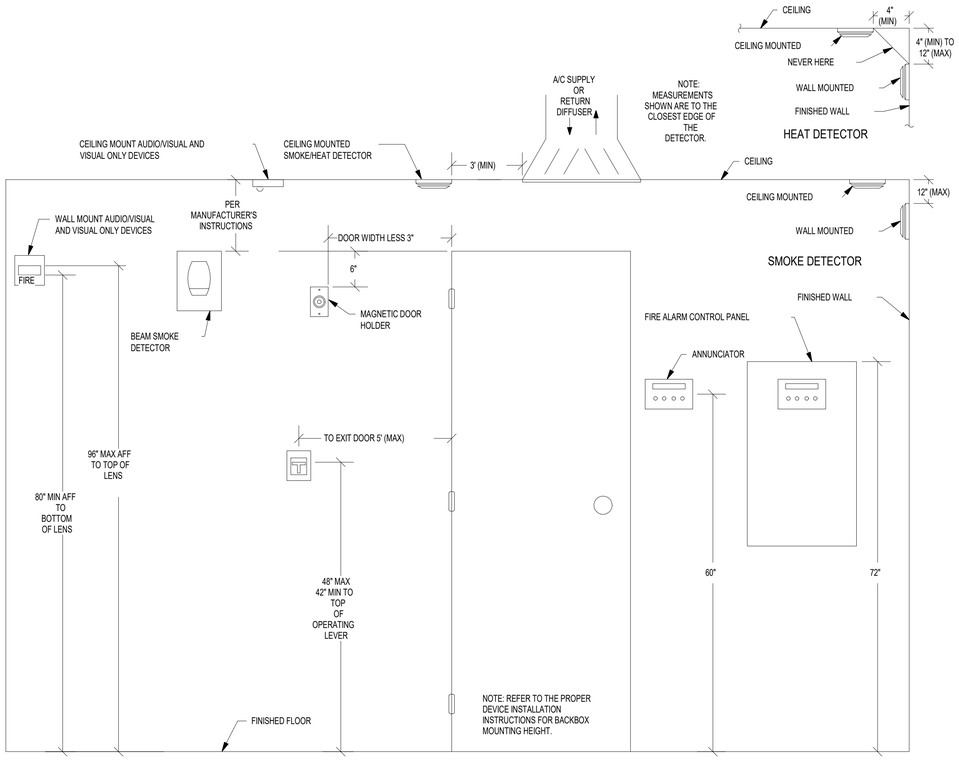

1 DEVICE MOUNTING DETAIL
NOT TO SCALE

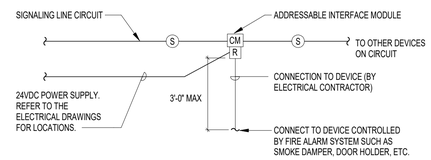

NOTES:
1. PROVIDE 24VDC POWER SUPPLY FROM FACP AS RQUIRED.
2. PROVIDE RELAY AS REQUIRED.
3. VERIFY POWER DRAW AND VOLTAGE OF DEVICE WITH THE RESPECTIVE CONTRACTOR.

2 FIRE ALARM - 24VDC POWER CONTROL INTERFACE DETAIL
NOT TO SCALE

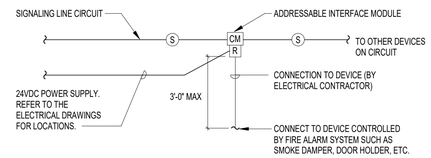

NOTES:
1. PROVIDE 24VDC POWER SUPPLY FROM FACP AS RQUIRED.
2. PROVIDE RELAY AS REQUIRED.
3. VERIFY POWER DRAW AND VOLTAGE OF DEVICE WITH THE RESPECTIVE CONTRACTOR.

3 FIRE ALARM - 120V POWER CONTROL INTERFACE DETAIL
NOT TO SCALE

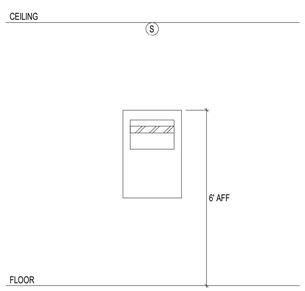

NOTES:
1. FOR BLOCK WALLS - COORDINATE MOUNTING HEIGHT WITH TOP OF COURSE OF BLOCK NEAREST 6 FEET AFF.

4 FIRE ALARM PANEL ANNUNCIATOR MOUNTING DETAIL
NOT TO SCALE

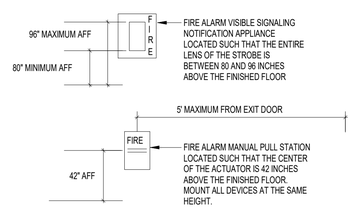

NOTES:
1. WHERE FLOOR PLAN INDICATES THAT NOTIFICATION APPLIANCE AND MANUAL PULL STATION ARE LOCATED IN THE SAME AREA, THEY SHALL BE MOUNTED IN THE SAME VERTICAL LINE.

5 FA MANUAL PULL STATION AND STROBE MOUNTING DETAIL
NOT TO SCALE

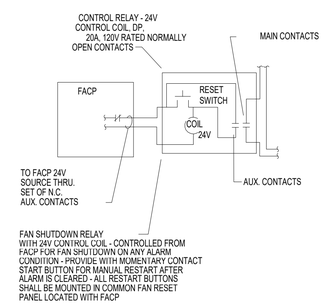

ABOVE DETAIL IS FOR INFORMATION PURPOSES ONLY & MAY NEED TO BE ADJUSTED TO SUIT FIELD CONDITION

FAN SHUTDOWN NOTES

1. ELEC. CONTRACTOR SHALL PROVIDE DUCT DETECTORS AS NOTED TIE TO FACP ZONE(S) NOTED.
2. ELEC. CONTR. SHALL PROVIDE COMMON FAN SHUTDOWN CKT. FROM AUX. CONTACTS IN FACP FOR FAN SHUTDOWN ON ANY ALARM CONDITION. CIRCUIT SHALL BE WIRED THRU. AHU. CONTROL PANEL POWER CIRCUIT SUCH THAT AUTO RESTART OF UNITS IS REQUIRED AFTER RESET OF FACP - ELEC. CONTR. SHALL PROVIDE ALL RQD. RELAYS & SWITCHES & CO-ORD WITH MECH. EQUIP. SUPPLIERS DETAILED WIRING DIAGRAMS.

6 TYPICAL RTU FAN RESET DETAIL
NOT TO SCALE

Architecture
Engineering
Environmental
Land Surveying
BL Companies
355 Research Parkway
Meriden, CT 06450
(203) 630-1406
(203) 630-2615 Fax

DENNIS MICHAEL BURTON
No. 15185
REGISTERED PROFESSIONAL ENGINEER (ELECTRICAL)

PAWTUCKET-CENTRAL FALLS TRANSIT CENTER
300 PINE STREET PAWTUCKET, RI

REVISIONS

NO	DATE	DESCRIPTION

Designed:	Designer
Drawn:	Author
Reviewed:	Approver
Project No.:	2301115
Date:	04/09/2024

Issued for:
CONSTRUCTION DOCUMENTS

Title:
FIRE ALARM DETAILS

Sheet No.
FA501

4/4/2024 3:50:05 PM C:\Users\PShah\Documents\2301115_RIPTA_PassengerFacility_R23_MEP_pshahQE5Y4.rvt

© 2022 BL COMPANIES, INC. THESE DRAWINGS SHALL NOT BE UTILIZED BY ANY PERSON, FIRM OR CORPORATION WITHOUT THE SPECIFIC WRITTEN PERMISSION OF BL COMPANIES.

FIRE ALARM SYSTEM OPERATIONAL MATRIX

INPUT	OUTPUT	ALARM				SUPERVISORY			TROUBLE			CONTROL		FIRE SAFETY FUNCTIONS							
		ALARM AT FACP	ALARM AT ANNUNCIATOR	ALARM AT FIRE DEPARTMENT	ACTIVATE NOTIFICATION APPLIANCES	SUPERVISORY AT FACP	SUPERVISORY AT ANNUNCIATOR	SUPERVISORY AT SUPERVISING STATION	TROUBLE AT FACP	TROUBLE AT ANNUNCIATOR	TROUBLE AT SUPERVISING STATION	DEACTIVATE NOTIFICATION APPLIANCES	RESET CONTROL PANEL AND ALL DEVICES	SHUT DOWN HVAC FAN UNITS	ACTIVATE ELEVATOR PRIMARY RECALL FUNCTION	ACTIVATE ELEVATOR ALTERNATE RECALL FUNCTION	ACTIVATE ELEVATOR SHUNT TRIP FUNCTION	ACTIVATE HVLS FAN SHUTDOWN			
		A	B	C	D	E	F	G	H	I	J	K	L	M	N	O	P	Q	R	S	
MANUAL PULL STATION	1	X	X	X	X																1
AREA SMOKE DETECTOR	2	X	X	X	X																2
AREA HEAT DETECTOR	3	X	X	X	X																3
DUCT MOUNTED SMOKE DETECTOR	4					X	X	X						X							4
POWER FAILURE	5								X	X	X										5
TROUBLE CONDITION	6								X	X	X										6
SYSTEM SILENCE	7											X									7
SYSTEM RESET	8												X								8
	9																				9
	10																				10
	11																				11
	12																				12
	13																				13
	14																				14
	15																				15
	16																				16
	17																				17
	18																				18
		A	B	C	D	E	F	G	H	I	J	K	L	M	N	O	P	Q	R	S	

NOTE: VERIFY SEQUENCE CONFORMS TO LOCATION SPECIFIC REQUIREMENTS.

Architecture
Engineering
Environmental
Land Surveying
BL Companies

355 Research Parkway
Meriden, CT 06450
(203) 630-1406
(203) 630-2615 Fax

DENNIS MICHAEL BURTON
No. 15185
REGISTERED
PROFESSIONAL ENGINEER
(ELECTRICAL)

PAWTUCKET-CENTRAL FALLS TRANSIT CENTER
300 PINE STREET PAWTUCKET, RI

REVISIONS

NO	DATE	DESCRIPTION

Designed: PJS
Drawn: PJS
Reviewed: BP/GM/CR
Project No.: 2301115
Date: 04/09/2024
Issued for:
CONSTRUCTION DOCUMENTS

Title:
FIRE ALARM SYSTEM MATRIX

Sheet No.
FA601

4/4/2024 3:50:05 PM C:\Users\PShah\Documents\2301115_RIPTA_PassengerFacility_R23_MEP_pshahQE5Y4.rvt

© 2022 BL COMPANIES, INC. THESE DRAWINGS SHALL NOT BE UTILIZED BY ANY PERSON, FIRM OR CORPORATION WITHOUT THE SPECIFIC WRITTEN PERMISSION OF BL COMPANIES.

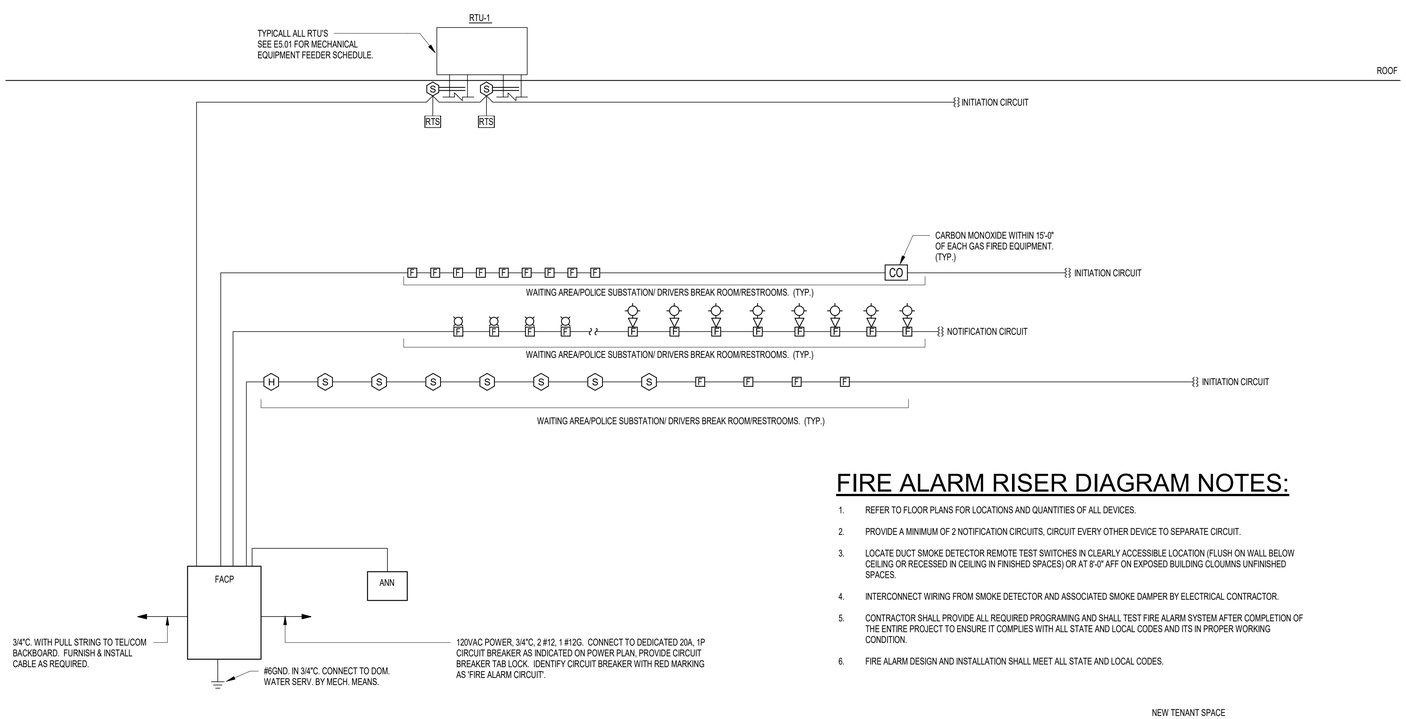

1 FIRE ALARM RISER DIAGRAM
NOT TO SCALE

FIRE ALARM RISER DIAGRAM NOTES:

1. REFER TO FLOOR PLANS FOR LOCATIONS AND QUANTITIES OF ALL DEVICES.
2. PROVIDE A MINIMUM OF 2 NOTIFICATION CIRCUITS, CIRCUIT EVERY OTHER DEVICE TO SEPARATE CIRCUIT.
3. LOCATE DUCT SMOKE DETECTOR REMOTE TEST SWITCHES IN CLEARLY ACCESSIBLE LOCATION (FLUSH ON WALL BELOW CEILING OR RECESSED IN CEILING IN FINISHED SPACES) OR AT 6'-0" AFF ON EXPOSED BUILDING CLOUMNS UNFINISHED SPACES.
4. INTERCONNECT WIRING FROM SMOKE DETECTOR AND ASSOCIATED SMOKE DAMPER BY ELECTRICAL CONTRACTOR.
5. CONTRACTOR SHALL PROVIDE ALL REQUIRED PROGRAMING AND SHALL TEST FIRE ALARM SYSTEM AFTER COMPLETION OF THE ENTIRE PROJECT TO ENSURE IT COMPLIES WITH ALL STATE AND LOCAL CODES AND ITS IN PROPER WORKING CONDITION.
6. FIRE ALARM DESIGN AND INSTALLATION SHALL MEET ALL STATE AND LOCAL CODES.

FIRE ALARM GENERAL DESIGN NOTES:

1. DESIGN BUILT RESPONSIBILITY:

THE DESIGN-BUILD CONTRACTOR IS RESPONSIBLE FOR THE DESIGN, INSTALLATION, AND TESTING OF ALL FIRE PROTECTION SYSTEMS SPECIFIED HEREIN SO THAT THE FINAL WORK PRODUCT IS COMPLETE AND USABLE TO THE OWNER. THE CONTRACTOR IS RESPONSIBLE TO PREPARE ALL PLANS, CALCULATIONS, AND PERMIT APPLICATIONS, TO AFFIX ALL REQUIRED CERTIFICATIONS AND SEALS, TO PAY ALL REQUIRED FEES, AND TO PERFORM ALL OTHER WORK NECESSARY TO SECURE A CONSTRUCTION PERMIT AND TO OBTAIN FINAL APPROVAL OF THE WORK.

2. REFERENCES:

A. NATIONAL FIRE PROTECTION ASSOCIATION (NFPA)
1. NFPA 16 – STANDARD FOR THE INSTALLATION OF SPRINKLER SYSTEMS
2. NFPA 24 – STANDARD FOR THE INSTALLATION OF PRIVATE FIRE SERVICE MAINS AND THEIR APPURTENANCES
3. NFPA 70 – NATIONAL ELECTRICAL CODE
4. NFPA 72 – NATIONAL FIRE ALARM AND SIGNALING CODE
5. NFPA 1963 – STANDARD FOR FIRE HOSE CONNECTIONS
B. THE ADVISORY PROVISIONS (APPENDICES/ ANNEXES) OF THE ABOVE REFERENCED NFPA PUBLICATIONS SHALL BE MANDATORY, AS THOUGH THE WORD "SHALL" HAD BEEN SUBSTITUTED FOR "SHOULD" WHEREVER IT APPEARS.
C. UNDERWRITERS LABORATORIES, INC. (UL)
1. FIRE PROTECTION EQUIPMENT DIRECTORY (MOST CURRENT EDITION INCLUDING SUPPLEMENTS)
2. BUILDING MATERIALS DIRECTORY (MOST CURRENT EDITION INCLUDING SUPPLEMENTS)
3. ELECTRICAL CONSTRUCTION MATERIALS DIRECTORY (MOST CURRENT EDITION INCLUDING SUPPLEMENTS)
D. COMPLY WITH ALL OTHER APPLICABLE FEDERAL, STATE AND LOCAL CODES AND ORDINANCES.
E. IF THERE ARE ANY CONFLICTS BETWEEN THESE SPECIFICATIONS AND THE REFERENCED STANDARDS AND PUBLICATIONS, THE MOST STRINGENT REQUIREMENTS SHALL APPLY, AS DETERMINED BY THE ENGINEER.

3. PREFORMANCE REQUIREMENTS:

THE FIRE ALARM SYSTEM SHALL RESPOND TO VARIOUS SYSTEM INPUTS AS INDICATED ON THE FIRE ALARM SEQUENCE OF OPERATIONS MATRIX ON THE FIRE PROTECTION DRAWINGS. ALL ALARM SIGNALS SHALL LATCH AND SHALL NOT RELEASE UNTIL THE SYSTEM IS MANUALLY RESET AT THE FACU OR AN ANNUNCIATOR PANEL. ALL OTHER SIGNALS (SUPERVISORY OR TROUBLE) SHALL BE SELF-RESTORING UPON CORRECTION OF THE OFF-NORMAL CONDITION UNLESS OTHERWISE INDICATED ON THE FIRE ALARM SEQUENCE OF OPERATIONS MATRIX.

4. DESIGN REQUIREMENTS:

THE NEW SYSTEM SHALL BE A FULLY FIELD PROGRAMMABLE, MICROPROCESSOR-BASED ADDRESSABLE SYSTEM CAPABLE OF TWO-WAY COMMUNICATION OVER SIGNALING LINE CIRCUITS BETWEEN INTELLIGENT/ANALOG ADDRESSABLE INITIATING DEVICES OR ADDRESSABLE INTERFACING/CONTROL MODULES AND THE FIRE ALARM CONTROL UNIT. ALL EQUIPMENT SHALL BE NEW AND UNUSED WITH A WARRANTY OF AT LEAST ONE-YEAR FROM THE DATE OF FINAL INSPECTION AND ACCEPTANCE BY THE APPROVAL AUTHORITIES. ALL PANELS AND PERIPHERAL DEVICES SHALL BE THE STANDARD PRODUCT OF A SINGLE MANUFACTURER AND SHALL DISPLAY THE MANUFACTURER'S NAME ON EACH COMPONENT. ALL COMPONENTS OF THE SYSTEM SHALL BE UL-LISTED AND/OR FM-APPROVED, AND COMPATIBILITY OF ALL SYSTEM COMPONENTS SHALL BE VERIFIED. THE FIRE ALARM CONTROL UNIT (FACU) AND DIGITAL ALARM COMMUNICATOR TRANSMITTER (DACT) SHALL BE PROVIDED TO MONITOR ALL INITIATING DEVICES, INCLUDING WATERFLOW AND VALVE TAMPER SWITCHES FOR ALL FIRE SPRINKLER SYSTEMS, MANUAL PULL STATIONS, SPOT AND DUCT SMOKE DETECTORS, AND ALL OTHER INITIATING DEVICES INDICATED ON THE FIRE PROTECTION DRAWINGS AND SPECIFICATIONS. THE SYSTEM SHALL PROVIDE A DISTINCT EVACUATION SIGNAL USING STROBES AND HORN/ STROBES. THE SYSTEM SHALL BE ARRANGED SUCH THAT THE EVACUATION SIGNALS ARE ACTIVATED ACCORDING TO THE FIRE ALARM SEQUENCE OF OPERATIONS MATRIX INDICATED ON THE DRAWINGS. ALL SYSTEM STROBES SHALL CONTINUE TO OPERATE NORMALLY FOLLOWING SILENCING OF THE SYSTEM UNTIL THE SYSTEM IS RESET. ALL STROBES SHALL BE SYNCHRONIZED TO OPERATE SIMULTANEOUSLY. THE FIRE ALARM CONTROL UNIT SHALL ALLOW FOR LOADING OR EDITING SPECIAL INSTRUCTIONS AND OPERATING SEQUENCES AS REQUIRED. THE SYSTEM IS TO BE CAPABLE OF ON-SITE PROGRAMMING TO ACCOMMODATE FACILITY EXPANSION, BUILDING PARAMETER CHANGES, OR CHANGES AS REQUIRED BY LOCAL CODES. THE SUBSTITUTION OF EEPROMS OR OTHER ELECTRONIC MEMORY CHIPS SHALL NOT BE REQUIRED FOR ANY PROGRAMMING CHANGES RELATED TO SYSTEM MODIFICATION OR EXPANSION. ALL SOFTWARE OPERATIONS ARE TO BE STORED IN A NON-VOLATILE PROGRAMMABLE MEMORY WITHIN THE FIRE ALARM CONTROL UNIT. LOSS OF PRIMARY AND SECONDARY POWER SHALL NOT ERASE THE INSTRUCTIONS STORED IN MEMORY. THE OWNER/ TENANT SHALL BE PROVIDED WITH BOTH A WRITTEN AND AN ELECTRONIC COPY OF THE COMPLETE PROGRAM FOR THE SYSTEM, ALONG WITH APPROPRIATE SOFTWARE WHICH WILL ALLOW THE MAINTENANCE STAFF TO CARRY OUT PROGRAMMING CHANGES INVOLVING THE SYSTEM. THE ABILITY FOR SELECTIVE INPUT/OUTPUT CONTROL FUNCTIONS BASED ON ANDING, ORING, NOTING, TIMING AND SPECIAL CODED OPERATIONS IS TO ALSO BE INCORPORATED IN THE RESIDENT SOFTWARE PROGRAMMING OF THE SYSTEM. THE FACU AND DACT SHALL BE LOCATED AS INDICATED ON THE DRAWINGS. FULL-FUNCTION REMOTE ANNUNCIATOR PANELS WITH: LCD DISPLAY AND THE CAPABILITY TO ACKNOWLEDGE, SILENCE, AND RESET ALL ALARM, SUPERVISORY, OR TROUBLE CONDITIONS SHALL BE PROVIDED AND LOCATED NEAR THE MAIN SECURITY DESK, AS INDICATED ON THE FIRE PROTECTION DRAWINGS. COORDINATE THE EXACT LOCATION OF THE EQUIPMENT WITH THE TENANT. SELECTION OF CABLE TYPES AND WIRE WITH RESPECT TO CONDUCTOR SIZE, SHIELDING REQUIREMENTS, AND SEPARATION BETWEEN CIRCUITS SHALL BE IN FULL COMPLIANCE WITH THE REQUIREMENTS OF THE MANUFACTURER OF THE FACU AND THE DACT, WITHOUT EXCEPTION. ALL CIRCUIT WIRE/CABLE SHALL BE SPECIFICALLY LISTED FOR USE WITH FIRE ALARM SYSTEMS. TO ACCOMMODATE AND FACILITATE JOB SITE CHANGES, ALL CIRCUITS SHALL BE INDIVIDUALLY CONFIGURABLE ON-SITE. THE FACU SHALL BE DESIGNED FOR FUTURE EXPANSION AND MODIFICATION. IN NO CASE SHALL CIRCUIT AND/OR MODULE LOADING EXCEED EIGHTY (80) PERCENT OF THE DESIGN CAPACITY AS SPECIFIED BY THE MANUFACTURER. ALL SUBPANELS, SUCH AS NAC PANELS, SHALL BE DESIGNED FOR FUTURE EXPANSION AND MODIFICATION. IN NO CASE SHALL CIRCUIT AND/OR MODULE LOADING EXCEED EIGHTY (80) PERCENT OF THE DESIGN CAPACITY AS SPECIFIED BY THE MANUFACTURER. ALL ALARM AND SUPERVISORY DEVICES SHALL BE MONITORED AS SEPARATE AND DISTINCT ALARM POINTS USING SEPARATE MONITOR MODULES AS NEEDED. ALL INITIATING DEVICE CIRCUITS SHALL BE ARRANGED AS CLASS A, STYLE D. ALL NOTIFICATION APPLIANCE CIRCUITS SHALL BE ARRANGED AS CLASS B, STYLE Y. ALL SIGNALING LINE CIRCUITS SHALL BE ARRANGED AS CLASS A, STYLE 6.

5. REFER TO INTELIGENT, ADDRESSABLE FIRE ALARM SIGNALING SESTEM SPECIFICATIONS SECTION 28 3111 FOR ADDITIONAL INFORMATION AND REQUIREMENTS.

Architecture
Engineering
Environmental
Land Surveying
BL Companies
355 Research Parkway
Meriden, CT 06450
(203) 630-1406
(203) 630-2615 Fax

DENNIS MICHAEL BURTON
No. 15185
REGISTERED
PROFESSIONAL ENGINEER
(ELECTRICAL)

PAWTUCKET-CENTRAL FALLS TRANSIT CENTER
300 PINE STREET PAWTUCKET, RI

REVISIONS

NO	DATE	DESCRIPTION

Designed:	PJS
Drawn:	PJS
Reviewed:	BP/GM/CR
Project No.:	2301115
Date:	04/09/2024
Issued for:	CONSTRUCTION DOCUMENTS

Title: FIRE ALARM RISER DIAGRAMS

Sheet No.

FA602

4/4/2024 3:50:06 PM C:\Users\PShah\Documents\2301115_RIPTA_PassengerFacility_R23_MEP_pshahQE5Y4.rvt

© 2022 BL COMPANIES, INC. THESE DRAWINGS SHALL NOT BE UTILIZED BY ANY PERSON, FIRM OR CORPORATION WITHOUT THE SPECIFIC WRITTEN PERMISSION OF BL COMPANIES.

FIXTURE CONNECTION SCHEDULE

QUANTITY	FIXTURE #	FIXTURE	MINIMUM SIZE UTILITY FIXTURE								
			WASTE COLLECTION	DRAINAGE FIXTURE UNITS	TOTAL DRAINAGE FIXTURE UNITS	HOT WATER SUPPLY	HOT WATER FIXTURE UNITS	COLD WATER SUPPLY	COLD WATER FIXTURE UNITS	TOTAL FIXTURE UNITS PER FIXTURE	TOTAL FIXTURE UNITS
8	W1, W2	WATER CLOSET - FLUSH VALVE	4"	4 DFU	32 DFU	---	---	1"	10 SFU	10 SFU	80 SFU
8	L1, L2	LAVATORY	1 1/2"	1 DFU	8 DFU	1/2"	1.5 SFU	1/2"	1.5 SFU	2 SFU	16 SFU
2	U1, U2	URINAL - FLUSH VALVE	2"	2 DFU	4 DFU	---	---	3/4"	5 SFU	5 SFU	10 SFU
1	EWC	ELECTRIC WATER COOLER	1 1/2"	0.5 DFU	0.5 DFU	---	---	1/2"	0.5 SFU	0.5 SFU	0.5 SFU
1	MS1	SERVICE SINK	3"	2 DFU	2 DFU	1/2"	2.25 SFU	1/2"	2.25 SFU	3 SFU	3 SFU
1	SK1	SINK - TWO COMPARTMENT	1 1/2"	2 DFU	2 DFU	1/2"	1 SFU	1/2"	1 SFU	1.5 SFU	1.5 SFU
					48.5 DFU						111 SFU (75 GPM)

PLUMBING SYMBOLS

	SOIL OR WASTE ABOVE FLOOR OR GRADE
	SOIL OR WASTE BELOW FLOOR OR GRADE
ST	STORM DRAIN ABOVE FLOOR OR GRADE
ST	STORM DRAIN BELOW FLOOR OR GRADE
OST	OVERFLOW STORM PIPING
	VENT PIPING
	COLD WATER PIPING
	HOT WATER PIPING
	HOT WATER RECIRC PIPING
G	GAS PIPING
C	CONDENSATE PIPING
	TEPID WATER PIPING
	TEPID WATER RECIRCULATING PIPING
140°	140° HOT WATER
PD	PUMP DISCHARGE PIPING
TP	TRAP PRIMER VALVE W/ PIPING TO DRAIN
TP E	ELECTRIC TRAP PRIMER W/ PIPING TO DRAIN

FITTING AND VALVE SYMBOLS

CO	CLEANOUT
FCO	FLOOR CLEANOUT
	BALANCING VALVE
	BALL VALVE
	CHECK VALVE
	GATE VALVE
	PRESSURE REDUCING VALVE
	MIXING VALVE
	BUTTERFLY VALVE
	UNION
	EXTERIOR WALL HYDRANT OR INTERIOR HOSE BIBB
	POINT OF NEW CONNECTION
	POINT OF DISCONNECTION
	HANDICAPPED ACCESSIBLE FIXTURE OR DEVICE

PLUMBING GENERAL NOTES

1. ALL WORK SHALL BE PERFORMED IN COMPLIANCE WITH CURRENT APPLICABLE CODES, ORDINANCES, THE REGULATORY AGENCIES HAVING JURISDICTION AND THE SPECIFICATIONS. THE SPECIFICATIONS MAY EXCEED THE REQUIREMENTS OF THE CODE, IN WHICH CASE, THE SPECIFICATION MUST BE FOLLOWED.
2. THE INTENT OF THESE DOCUMENTS IS FOR THE MEP TRADES TO FURNISH AND INSTALL COMPLETE MECHANICAL AND ELECTRICAL SYSTEMS. THE SPECIFIED PLUMBING SYSTEM SHALL BE COMPLETE IN ALL RESPECTS; OPERATIONAL, TESTED, ADJUSTED, APPROVED BY THE AUTHORITIES HAVING JURISDICTION AND READY FOR BENEFICIAL USE BY THE OWNER. ALL PLUMBING MUST BE TESTED IN ACCORDANCE WITH THE REQUIREMENTS OF 248 CMR 10
3. THE TRADES SHALL OBTAIN AND REVIEW ALL CONTRACT DOCUMENTS BEFORE SUBMITTING A BID. INFORMATION IS PROVIDED ON THE VARIOUS DRAWINGS, SCHEDULES, SPECIFICATIONS AND ALL OF THE VARIOUS DOCUMENTS IN THE BIDDING PACKAGE. THE CONTRACT DOCUMENTS ARE COMPLEMENTARY AND FORM A TOTAL PROJECT DESIGN AND INFORMATION SOURCE FOR CONSTRUCTION PURPOSES.
4. THE DRAWINGS ARE DIAGRAMMATIC AND INDICATE THE GENERAL ARRANGEMENT OF SYSTEMS AND WORK INCLUDED IN THE CONTRACT. COORDINATE LOCATIONS OF EQUIPMENT WITH OTHER TRADES BEFORE AND DURING CONSTRUCTION. ANY MODIFICATION TO THE EQUIPMENT LAYOUT, REQUIRED FOR INSTALLATION, IS TO BE PERFORMED UNDER THE CONTRACT AGREEMENT, AT NO ADDITIONAL COST. REFER TOP DETAILS, SCHEDULES AND SPECIFICATIONS FOR ADDITIONAL INFORMATION.
5. THE CONTRACTOR SHALL BECOME THOROUGHLY FAMILIAR WITH THE PROJECT DOCUMENTS OF ALL TRADES. THE DRAWINGS ARE DIAGRAMMATIC AND SHOW THE GENERAL ARRANGEMENT OF EQUIPMENT AND PIPING. THE CONTRACTOR SHALL COORDINATE THE EXACT LOCATION OF EQUIPMENT AND PIPING INSTALLATION WITH ALL THE TRADES BEFORE COMMENCING WORK.
6. EQUIPMENT SHALL BE INSTALLED IN ACCESSIBLE LOCATIONS, WHEN EQUIPMENT MUST BE LOCATED ABOVE AN INACCESSIBLE CEILING (GYP BOARD OR EQUIVALENT), OR BEHIND A WALL, AN APPROPRIATE ACCESS DOOR SHALL BE PROVIDED. IF AN ACCESS DOOR IS REQUIRED, IT SHALL BE OF A RATING APPROPRIATE FOR THE WALL/CEILING IN WHICH IT IS TO BE INSTALLED. THE CONTRACTOR SHALL COORDINATE LOCATIONS OF ACCESS PANELS FOR ALL VALVES AND DEVICES, REQUIRING ACCESS, WITH THE ARCHITECT, PRIOR TO INSTALLATION OF SUCH DEVICES OR OTHER APPURTENANCES.
7. SHOULD CONFLICTING INFORMATION BE FOUND WITHIN THE CONTRACT DOCUMENTS, IT IS INCUMBENT UPON THE CONTRACTOR TO REQUEST FOR CLARIFICATION PRIOR TO PRECEEDING WITH THE WORK. FOR BUDGETING PURPOSES, THE CONTRACTOR SHALL CARRY THE COST OF THE HIGHER QUALITY/QUANTITY OF WORK UNTIL SUCH TIME THAT A CLARIFICATION IS RENDERED.
8. THIS CONTRACT SHALL INCLUDE ALL THE NECESSARY PIPING, FITTINGS, TRANSITIONS, OFFSETS, ETC. AS REQUIRED TO INSTALL PIPING, EQUIPMENT, MAINTAINING PROPER CLEARANCES AND TO AVOID ANY CONFLICTS WITH OTHER TRADES, AND THE BUILDING STRUCTURE. THE CONTRACTOR SHALL BE HELD RESPONSIBLE FOR ANY ASSUMPTIONS, OMISSIONS OR ERRORS HE MAKES AS A RESULT OF HIS FAILURE TO COORDINATE WITH OTHER TRADES OR BECOME FULLY FAMILIAR WITH THE PROJECT DOCUMENTS OF ALL TRADES.
9. DO NOT INSTALL ANY PIPING OVER ELECTRICAL PANELS, TRANSFORMERS, SPECIAL EQUIPMENT, OR THROUGH ELECTRICAL ROOMS, DATA ROOMS, ELEVATOR MACHINE ROOM, STAIRWELL OR STAIRWELL WALLS THAT ARE NOT ASSOCIATED WITH OR SERVE THE RESPECTIVE ROOMS. COORDINATE THE LOCATION OF ELECTRICAL EQUIPMENT IN THE FIELD AND ADJUST AS NECESSARY.
10. IT IS NOT THE INTENT OF THE DRAWINGS TO SHOW INDIVIDUAL BRANCH PIPING TO EACH PLUMBING FIXTURE; ONLY THE BRANCH PIPING TO GROUPS OF FIXTURES IS INDICATED. EACH AND EVERY FIXTURE SHALL BE PROPERLY PIPED TO WATER, WASTE, AND VENT PIPING SYSTEMS. REFER TO THE PLUMBING SCHEDULES FOR INDIVIDUAL PIPE SIZES TO EACH FIXTURE.
11. PROVIDE PROPER PIPING SYSTEM IDENTIFICATION LABELS, SLOPES FOR DRAIN PIPING, CLEANOUTS, HANGERS, ETC. IN ACCORDANCE WITH OF THE LOCAL PLUMBING CODE.
12. REFER TO THE ARCHITECTURAL DRAWINGS FOR THE EXACT LOCATION AND MOUNTING HEIGHTS OF PLUMBING FIXTURES OR EQUIPMENT. ALL SUCH EQUIPMENT AND EQUIPMENT COLORS AND FINISHES SHALL BE COORDINATED WITH THE ARCHITECT. MOUNTING HEIGHTS SHALL BE APPROVED BY THE ARCHITECT.
13. INSTALL WATER HAMMER ARRESTORS (WHA) AT ALL QUICK CLOSING VALVES (FLUSH VALVES, SOLENOID VALVES,ETC.); SIZE SHALL BE BASED ON FIXTURE UNITS PER PDI STANDARDS AND INSTALLED PER MANUFACTURER'S RECOMMENDATION.
14. ALL PIPING, DRAINS, STRAINERS, FAUCETS, FAUCET AERATORS, FILTERS, ETC. SHALL BE THOROUGHLY CLEANED AND FLUSHED IMMEDIATELY BEFORE PROJECT COMPLETION. PROVIDE CERTIFICATION ON CONTRACTOR'S LETTER HEAD THAT THIS WORK HAS BEEN COMPLETED.
15. DOMESTIC WATER DROPS AND RISERS INSTALLED IN EXTERIOR WALLS SHALL BE INSTALLED ON THE WARM SIDE OF INSULATION AND THE LOCATION SHALL BE MADE INFILTRATION FREE.
16. BEFORE INSTALLATION, COORDINATE THE WORK WITH OWNER-FURNISHED EQUIPMENT, INCLUDING REQUIRED SERVICE CONNECTIONS, FACTORY START-UPS AND INSTALLATION OF FIELD DEVICES.
17. PIPE ALL CONDENSATE DRAINS FROM MECHANICAL EQUIPMENT COOLING COILS, BY GRAVITY (INTERIOR AIR HANDLING UNITS, FAN COIL UNITS, AC UNITS, ETC.) TO FLOOR DRAINS, JANITOR'S SINKS OR OTHER APPROVED LOCATION THROUGH AN AIR GAP. EACH CONDENSATE DRAIN SHALL BE TRAPPED AT THE EQUIPMENT DRAIN OUTLET, REFER TO TRAP DETAILS ON DRAWINGS. COORDINATE EXACT LOCATION OF EQUIPMENT WITH THE HVAC CONTRACTOR AND ADJUST AS NECESSARY.
18. ALL INDIRECT WASTE DRAINS SHALL BE PIPED TO FLOOR DRAINS, FUNNELS OR FIXED AIR GAP FITTINGS, THROUGH AIR GAP OR TO A SINK DRAIN TAILPIECE.
19. COORDINATE ALL PLUMBING EQUIPMENT REQUIRING POWER, FOR EXACT LOCATION AND POWER REQUIREMENTS WITH THE ELECTRICAL CONTRACTOR.
20. FLOOR MOUNTED PLUMBING EQUIPMENT SHALL BE INSTALLED ON A 6" CONCRETE HOUSE-KEEPING PAD. COORDINATE SIZE AND FINAL LOCATION OF ALL CONCRETE PADS WITH THE STRUCTURAL ENGINEER. PADS SHALL BE MINIMUM 6" LARGER THAN THE EQUIPMENT IN BOTH HORIZONTAL DIRECTIONS.
21. COORDINATE EXACT LOCATION OF PLUMBING SERVICES ENTERING THE BUILDING WITH THE SITE CONTRACTOR AND UTILITY DRAWINGS PRIOR TO INSTALLATION. COORDINATE ALL FOUNDATION WALL PENETRATIONS AND INVERT ELEVATIONS WITH THE GENERAL CONTRACTOR AND/OR CONSTRUCTION MANAGER BEFORE COMMENCING WORK.
22. SEISMICALLY SUPPORT THE EQUIPMENT AS REQUIRED BY CODE, THE AUTHORITY HAVING JURISDICTION, AND/OR AS SPECIFIED. SUBMIT ENGINEERED INSTALLATION DETAILS PER THE SPECIFICATIONS. THE CONTRACTOR'S SEISMIC ENGINEER SHALL REVIEW THE INSTALLATION AND PROVIDE A DETAILED REPORT FOR THE RECORD.
23. PROVIDE PIPE EXPANSION COMPENSATION FOR THE VARIOUS PIPING SYSTEMS. SUBMIT ENGINEERED DETAILS FOR APPROVAL AND VERIFY INSTALLATION IS IN ACCORDANCE WITH THE CODE. THE CONTRACTOR'S CONSULTING ENGINEER SHALL REVIEW THE INSTALLATION AND PROVIDE A REPORT OF THE FINDINGS.
24. CONTRACTOR TO PROVIDE PIPING EXPANSION ASSEMBLIES WHERE PIPING PASSES THROUGH A BUILDING / STRUCTURAL EXPANSION JOINT. REFER TO ARCH/STRUCTURAL PLANS FOR LOCATIONS.
25. INSTALL TRAP PRIMERS FOR FLOOR DRAINS, HUB DRAINS AND FIXED AIR GAP FITTINGS, WHERE TRAP IS SUBJECT TO LOSS OF SEAL BY EVAPORATION, CONNECT TRAP PRIMER TO COLD WATER LINE. PROVIDE ISOLATION VALVES AND EXTEND SLOPED PRIMING LINE TO DRAIN TRAPS.

PLUMBING SHEET LIST

REV	SHEET NUMBER	SHEET NAME
	P001	PLUMBING NOTES, SYMBOL LEGEND, & ABBREVIATIONS
	P101.1	OVERALL SANITARY, VENT AND STORM PLUMBING PLAN
	P102.1	OVERALL DOMESTIC WATER PLAN
	P103.1	OVERALL ROOF PLUMBING PLAN
	P501	PLUMBING DETAILS
	P502	PLUMBING DETAILS
	P601	PLUMBING SCHEDULES

Architecture
Engineering
Environmental
Land Surveying
BL Companies

355 Research Parkway
Meriden, CT 06450
(203) 630-1406
(203) 630-2615 Fax

JESSE E. VOSE
STATE OF RHODE ISLAND
No. 14344
HOPE
REGISTERED
PROFESSIONAL ENGINEER
MECHANICAL

PAWTUCKET-CENTRAL FALLS TRANSIT CENTER
300 PINE STREET PAWTUCKET, RI

REVISIONS

NO	DATE	DESCRIPTION

Designed: GM
Drawn: NV
Reviewed: JJ
Project No.: 2301115
Date: 04/09/2024
Issued for:
CONSTRUCTION DOCUMENTS

Title:
PLUMBING NOTES, SYMBOL LEGEND, & ABBREVIATIONS

Sheet No.
P001

4/4/2024 2:04:26 PM C:\Users\nvieira\Documents\2301115_RIPTA_PassengerFacility_R23_MEP_nvieiraXGS64.rvt
© 2022 BL COMPANIES, INC. THESE DRAWINGS SHALL NOT BE UTILIZED BY ANY PERSON, FIRM OR CORPORATION WITHOUT THE SPECIFIC WRITTEN PERMISSION OF BL COMPANIES.

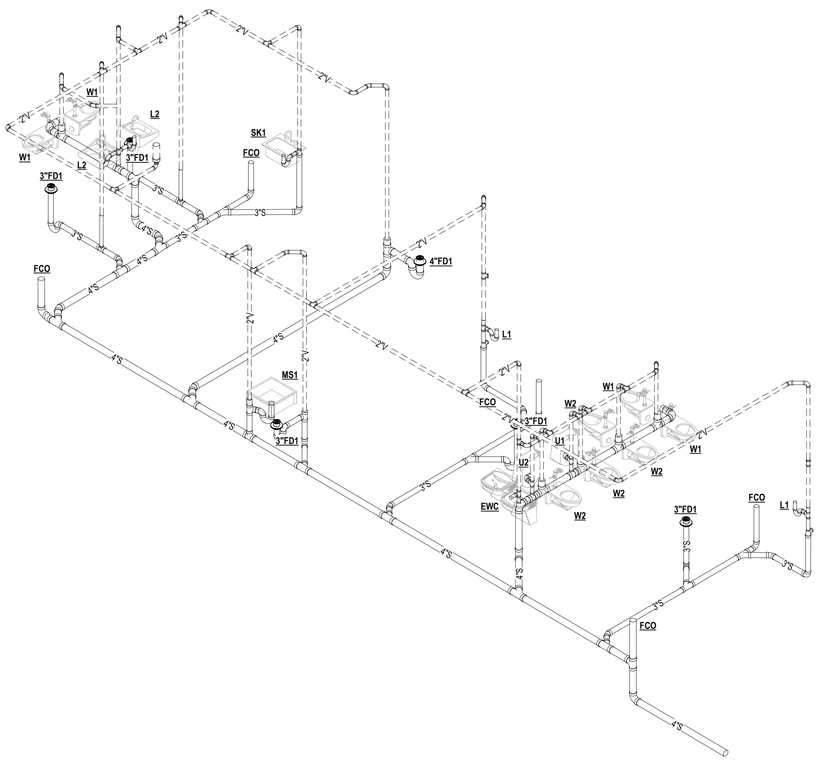

2 SANITARY AND VENT RISER

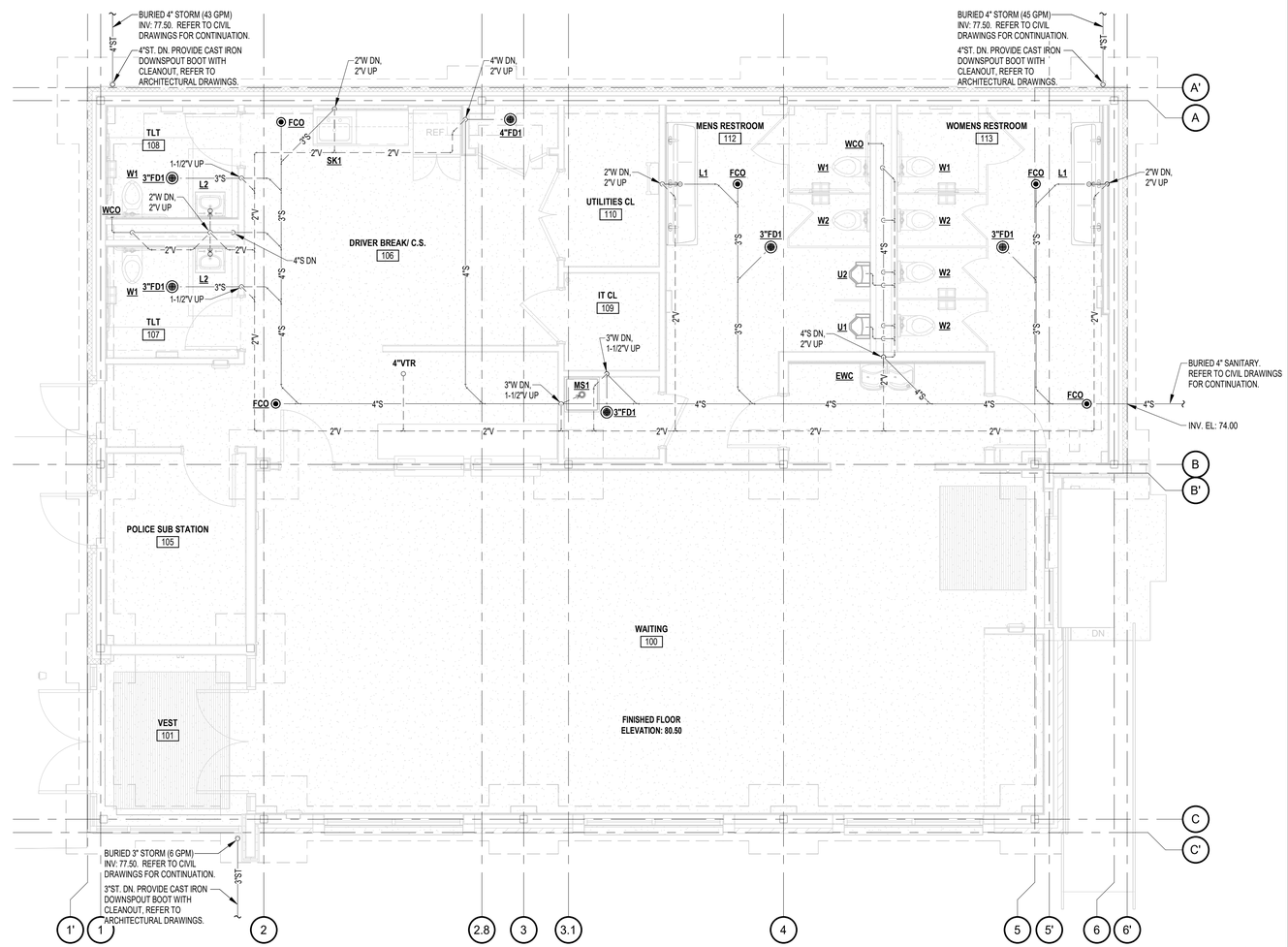

1 OVERALL SANITARY, VENT AND STORM PLUMBING PLAN

1/4" = 1'-0"

TRUE NORTH

4/4/2024 2:04:29 PM C:\Users\nvieira\Documents\2301115_RIPTA_PassengerFacility_R23_MEP_nvieiraXGS64.rvt

© 2022 BL COMPANIES, INC. THESE DRAWINGS SHALL NOT BE UTILIZED BY ANY PERSON, FIRM OR CORPORATION WITHOUT THE SPECIFIC WRITTEN PERMISSION OF BL COMPANIES.

Architecture
Engineering
Environmental
Land Surveying
BL Companies

355 Research Parkway
Meriden, CT 06450
(203) 630-1406
(203) 630-2615 Fax

JESSE E. VOSE
No.
REGISTERED
PROFESSIONAL ENGINEER
MECHANICAL

PAWTUCKET-CENTRAL FALLS TRANSIT CENTER
300 PINE STREET PAWTUCKET, RI

REVISIONS

NO	DATE	DESCRIPTION

Designed:	GM
Drawn:	NV
Reviewed:	JJ
Project No.:	2301115
Date:	04/09/2024

Issued for:
CONSTRUCTION DOCUMENTS

Title:
OVERALL SANITARY, VENT AND STORM PLUMBING PLAN

Sheet No.
P101.1

PLUMBING PLAN KEY NOTES:

1. WATER METER, BYPASS ASSEMBLY, BACKFLOW PREVENTER (RPZ) AND PRESSURE REDUCING VAVLE (PRV) FOR BUILDING DOMESTIC WATER SYSTEM. COORDINATE INSTALLATION WITH WATER COMPANY. SEE DETAILS FOR ADDITIONAL INFORMATION.
2. DOMESTIC HOT WATER SYSTEM (ELECTRIC WATER HEATER (EWH-1), EXPANSION TANK (ET), THERMOSTATIC MIXING VALVE (TMV) AND HOT WATER RECIRCULATION PUMP (RP-1). SEE WATER HEATER SCHEDULE AND SCHEMATIC PIPING DIAGRAM FOR ADDITIONAL SCOPE OF WORK AND PIPE SIZES.
3. 2"CW DROP, EXTEND TO WATER CLOSETS. PROVIDE WATER HAMMER ARRESTORS (WHA).
4. 2"CW DROP, EXTEND TO WATER CLOSETS AND URINALS. PROVIDE WATER HAMMER ARRESTORS (WHA).
5. EXTEND 1/2"H&CW TO LAVATORIES, PROVIDE INDIVIDUAL ISOLATION STOPS ON SUPPLIES FOR EACH FAUCET. (TYPICAL FOR ALL LAVATORIES)
6. 1-1/4"CW DROP, EXTEND TO WATER CLOSET AND LAVATORY. PROVIDE WATER HAMMER ARRESTORS (WHA).
7. 1/2"H&CW DROP TO SINK.
8. 1/2"CW DROP TO REFRIGERATOR SUPPLY BOX WITH WATER HAMMER ARRESTOR ON EACH SUPPLY .
9. 1/2"H&CW DROP TO MOP SINK.
10. 1/2"CW DROP TO ELECTRIC WATER COOLER.
11. 1/2"CW DROP TO HOSE BIBB (HB1).
12. 3/4"CW DROP TO EXTERIOR WALL HYDRANT (HB2) ON WARM SIDE OF BUILDING INSULATION.
13. 3/4"CW UP TO ROOF HYDRANT (RH1).
14. PROVIDE INLINE TRAP PRIMER VALVE FOR FLOOR DRAIN. INSTALL ON 1/2"CW LINE TO PLUMBING FIXTURE. EXTEND PRIMING LINE BELOW SLAB TO FLOOR DRAINS. SEE TRAP PRIMER DETAIL ON DWG. #P501
15. 1/2"CW DROP TO ELECTRONIC TRAP PRIMER VALVE FOR FLOOR DRAIN. EXTEND PRIMING LINE BELOW SLAB TO FLOOR DRAINS. SEE TRAP PRIMER DETAIL ON DWG. #P501

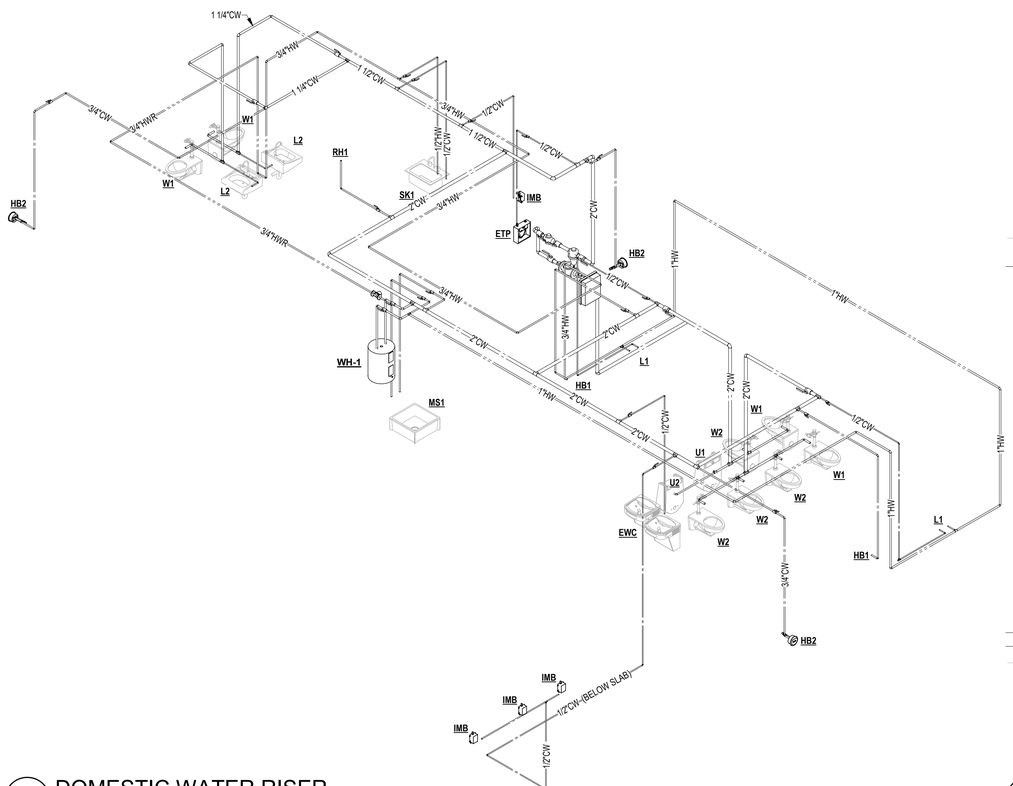

2 DOMESTIC WATER RISER

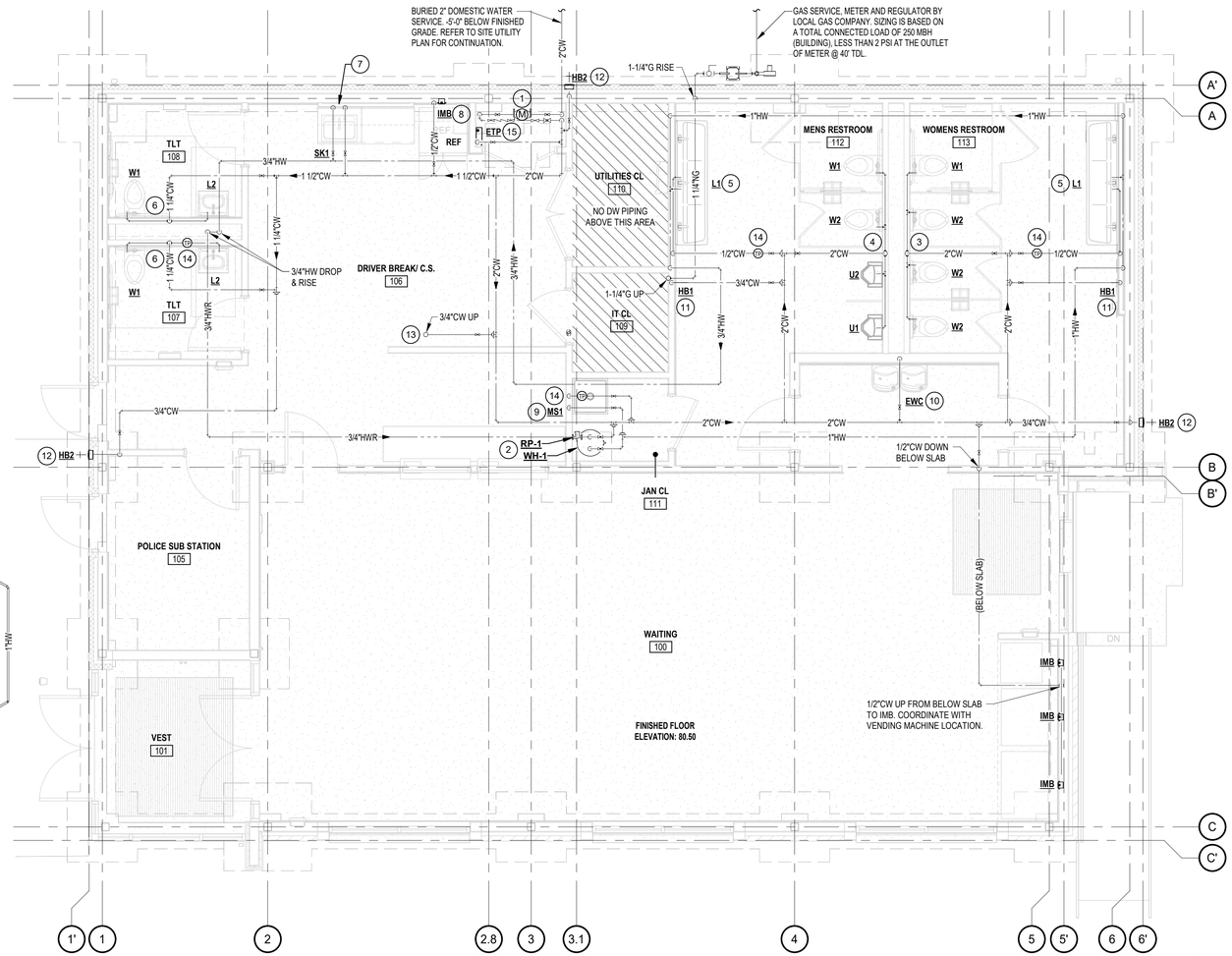

1 OVERALL DOMESTIC WATER PLUMBING PLAN
1/4" = 1'-0"

Architecture Engineering Environmental Land Surveying
BL Companies
355 Research Parkway
Meriden, CT 06450
(203) 630-1406
(203) 630-2615 Fax

JESSE E. VOSE
No. 15,444
REGISTERED
PROFESSIONAL ENGINEER
MECHANICAL

PAWTUCKET-CENTRAL FALLS TRANSIT CENTER
300 PINE STREET PAWTUCKET, RI

REVISIONS

NO	DATE	DESCRIPTION

Designed:	GM
Drawn:	NV
Reviewed:	JJ
Project No.:	2301115
Date:	04/09/2024
Issued for:	CONSTRUCTION DOCUMENTS

Title: OVERALL DOMESTIC WATER PLAN

Sheet No. P102.1

4/4/2024 2:04:36 PM C:\Users\nvieira\Documents\2301115_RIPTA_PassengerFacility_R23_MEP_nvieiraXGS64.rvt

© 2022 BL COMPANIES, INC. THESE DRAWINGS SHALL NOT BE UTILIZED BY ANY PERSON, FIRM OR CORPORATION WITHOUT THE SPECIFIC WRITTEN PERMISSION OF BL COMPANIES.

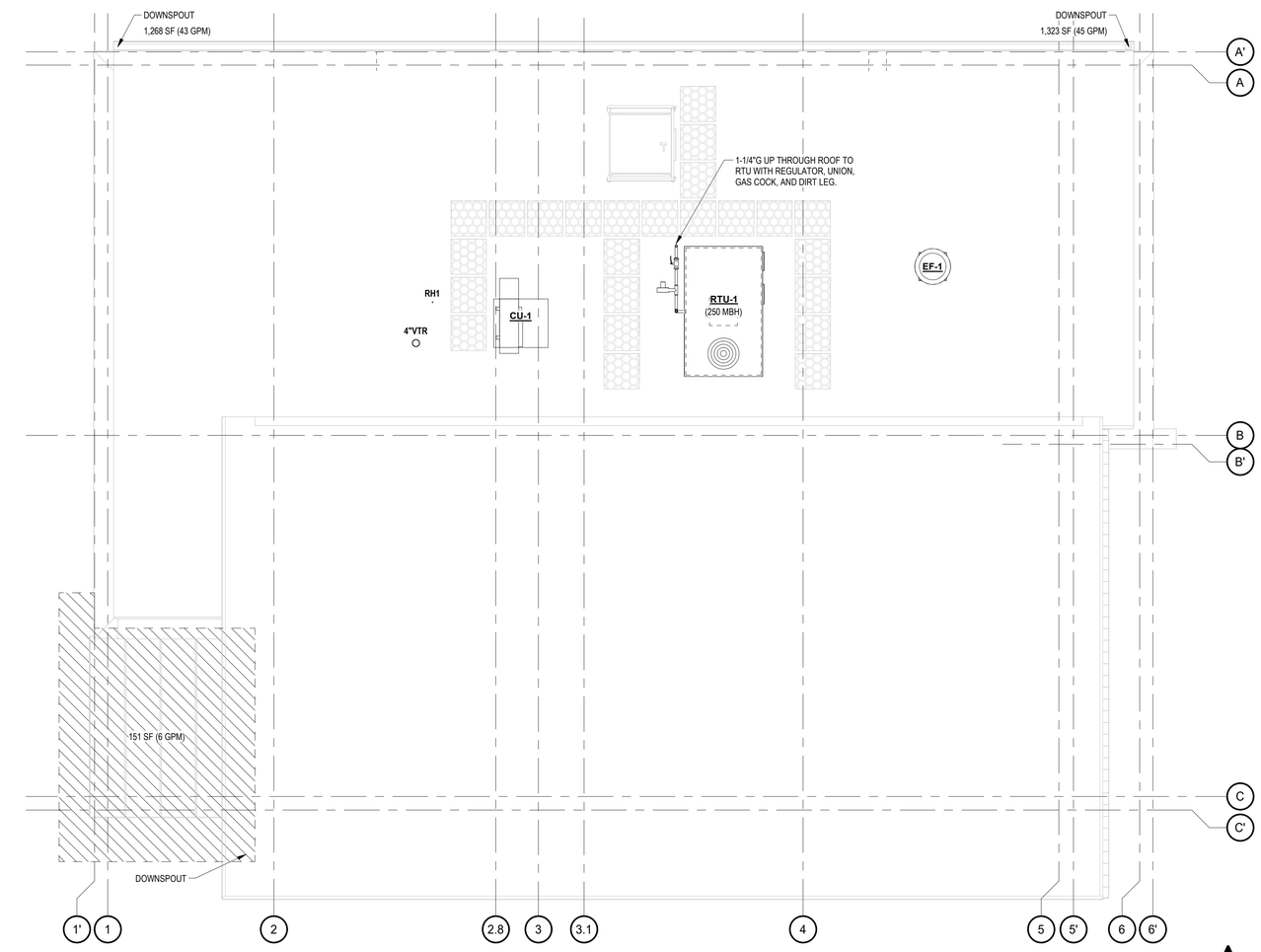

1 OVERALL ROOF PLUMBING PLAN
1/4" = 1'-0"

N
TRUE NORTH

Architecture
Engineering
Environmental
Land Surveying
BL Companies

355 Research Parkway
Meriden, CT 06450
(203) 630-1406
(203) 630-2615 Fax

JESSE E. VOSE
No.
REGISTERED
PROFESSIONAL ENGINEER
MECHANICAL

PAWTUCKET-CENTRAL FALLS TRANSIT CENTER
300 PINE STREET PAWTUCKET, RI

REVISIONS

NO	DATE	DESCRIPTION

Designed:	GM
Drawn:	NV
Reviewed:	JJ
Project No.:	2301115
Date:	04/09/2024

Issued for:
CONSTRUCTION DOCUMENTS

Title:
OVERALL ROOF PLUMBING PLAN

Sheet No.
P103.1

4/4/2024 2:04:36 PM C:\Users\nvieira\Documents\2301115_RIPTA_PassengerFacility_R23_MEP_nvieiraXGS64.rvt

© 2022 BL COMPANIES, INC. THESE DRAWINGS SHALL NOT BE UTILIZED BY ANY PERSON, FIRM OR CORPORATION WITHOUT THE SPECIFIC WRITTEN PERMISSION OF BL COMPANIES.

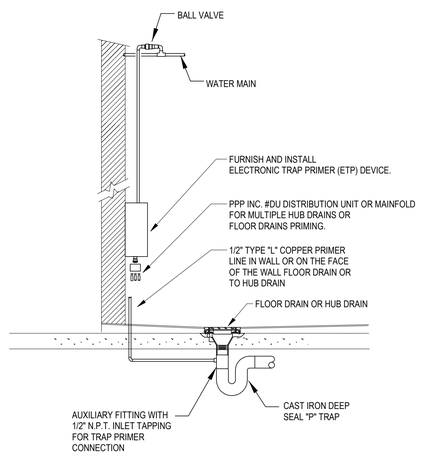

9 TYPICAL ELECTRONIC TRAP PRIMER DEVICE
NOT TO SCALE

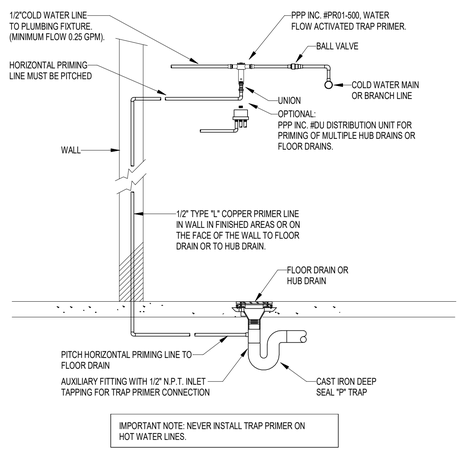

IMPORTANT NOTE: NEVER INSTALL TRAP PRIMER ON HOT WATER LINES.

8 WATER FLOW ACTIVATED TRAP PRIMER DEVICE
NOT TO SCALE

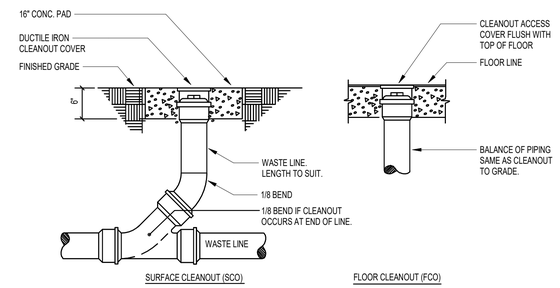

7 CLEANOUT DIAGRAMS
NOT TO SCALE

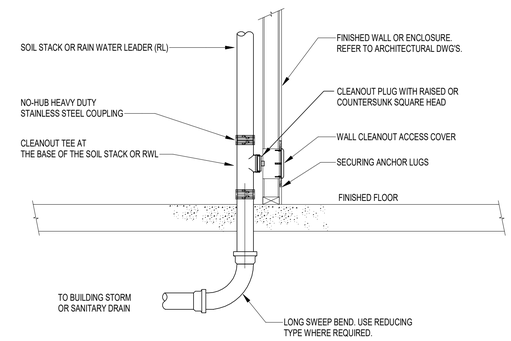

6 TYPICAL WALL CLEANOUT DETAIL
NOT TO SCALE

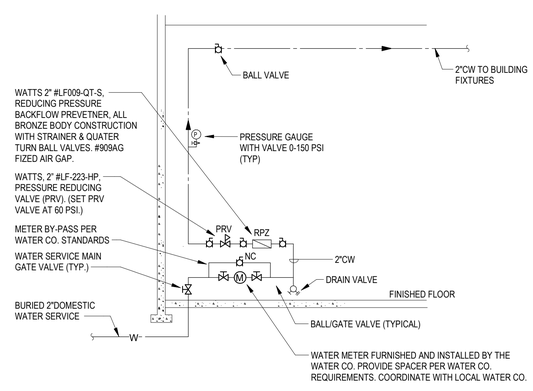

NOTE:
WATER METER ASSEMBLY SHALL BE ADEQUATELY SUPPORTED AND RESTRAIN TO PREVENT LATERAL MOVEMENT

4 WATER SERVICE ENTRY
NOT TO SCALE

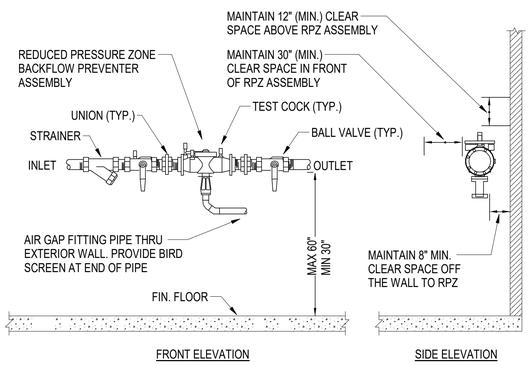

NOTES:
1. THE RPZ MOUNTING HEIGHT AND CLEARANCES INDICATED ABOVE SHALL BE MAINTAINED FOR PROPER ACCESS TO UNIT FOR TESTING, MAINTENANCE, AND INSPECTION PURPOSES.
2. THE ASSEMBLY SHALL BE ADEQUATELY SUPPORTED AND/OR RESTRAINED TO PREVENT LATERAL MOVEMENT. PIPE HANGERS. BRACES, SADDLES, STANCHIONS. PIERS, ETC., SHALL BE USED TO SUPPORT THE DEVICE AND SHOULD BE PLACED IN A MANNER THAT WILL NOT OBSTRUCT ACCESS TO THE TESTING PORTS OR VALVES.

3 BACKFLOW PREVENTER INSTALLATION DETAIL
NOT TO SCALE

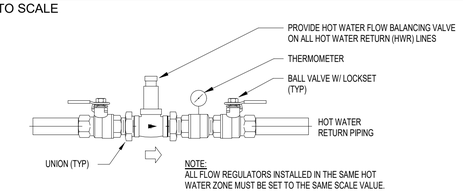

5 HOT WATER RETURN BALANCING ASSEMBLY
NOT TO SCALE

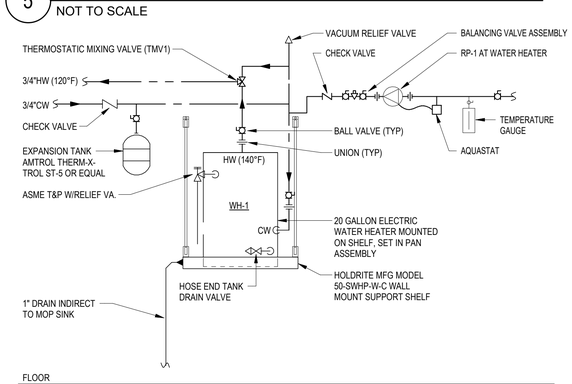

2 WATER HEATER PIPING DIAGRAM
12" = 1'-0"

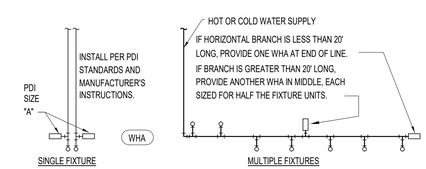

PDI SIZE	PIPE SIZE	FIXTURE UNIT LOAD
A	1/2"	1-11
B	3/4"	12-32
C	1"	33-60
D	1-1/4"	61-113
E	1-1/2"	114-154
F	2"	154-330

FIXTURE UNIT TABULATION		
FIXTURE	COLD	HOT
VALVE WATER CLOSET	10	--
TANK WATER CLOSET	5	--
URINAL	5	--
LAVATORY/SINK	1.5	1.5
JANITOR'S SINK	3	3

PROVIDE WATER HAMMER ARRESTERS BY SIOUX CHIEF, PRECISION PLUMBING PRODUCTS, WATTS, OR APPROVED EQUIVALENT WITH PISTON AND 0-RING CONSTRUCTION, HAVING PDI # WH- 201, ASSE # 1010 AND ANSI # A112.26.1M CERTIFICATION. INSTALL IN HORIZONTAL OR VERTICAL POSITION, BUT NEVER UPSIDE DOWN. INSTALL IN LINE WITH WATER FLOW DIRECTION IF POSSIBLE. SIZE THE UNITS AS SHOWN ON THE DRAWINGS AND/OR PER THE TABLES SHOWN ABOVE.

1 WATER HAMMER ARRESTOR DETAIL.
NOT TO SCALE

Architecture
Engineering
Environmental
Land Surveying
BL Companies
355 Research Parkway
Meriden, CT 06450
(203) 630-1406
(203) 630-2615 Fax

JESSE E. VOSE
No.
REGISTERED
PROFESSIONAL ENGINEER
MECHANICAL

PAWTUCKET-CENTRAL FALLS TRANSIT CENTER
300 PINE STREET PAWTUCKET, RI

REVISIONS

NO	DATE	DESCRIPTION

Designed:	GM
Drawn:	NV
Reviewed:	JJ
Project No.:	2301115
Date:	04/09/2024
Issued for:	CONSTRUCTION DOCUMENTS

Title: PLUMBING DETAILS

Sheet No. P501

4/4/2024 2:04:37 PM C:\Users\nvieira\Documents\2301115_RIPTA_PassengerFacility_R23_MEP_nvieiraXGS64.rvt

© 2022 BL COMPANIES, INC. THESE DRAWINGS SHALL NOT BE UTILIZED BY ANY PERSON, FIRM OR CORPORATION WITHOUT THE SPECIFIC WRITTEN PERMISSION OF BL COMPANIES.

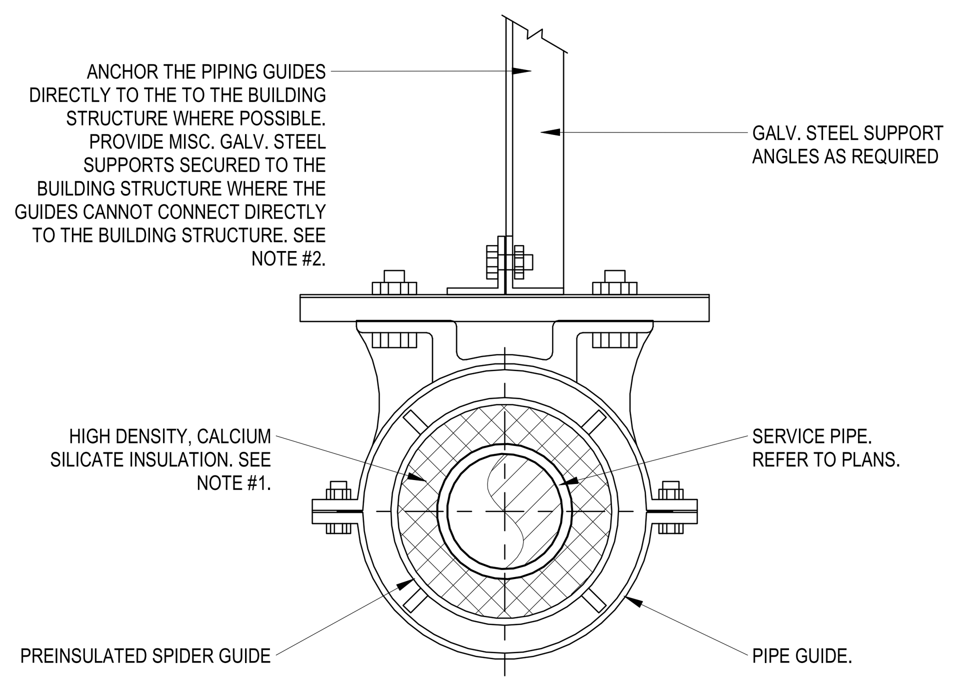

NOTES:
1. PROVIDE A CONTINUOUS VAPOR BARRIER AND INSULATION THICKNESS AS INDICATED IN THE SPECIFICATIONS BASED ON THE SERVICE PIPING.
2. BASED ON PROJECT REQUIREMENTS, PROVIDE SEISMIC BRACING WHERE REQUIRED. THE SEISMIC BRACING SHALL NOT PASS ACROSS A SEISMIC OR EXPANSION JOINT. SEISMIC BRACING SHALL NOT CONNECT TO, OR TIE TOGETHER, EITHER SIDE OF THE JOINT. REFER TO THE SPECIFICATIONS FOR ADDITIONAL INFORMATION.

3 PIPING GUIDE ARRANGEMENT
NOT TO SCALE

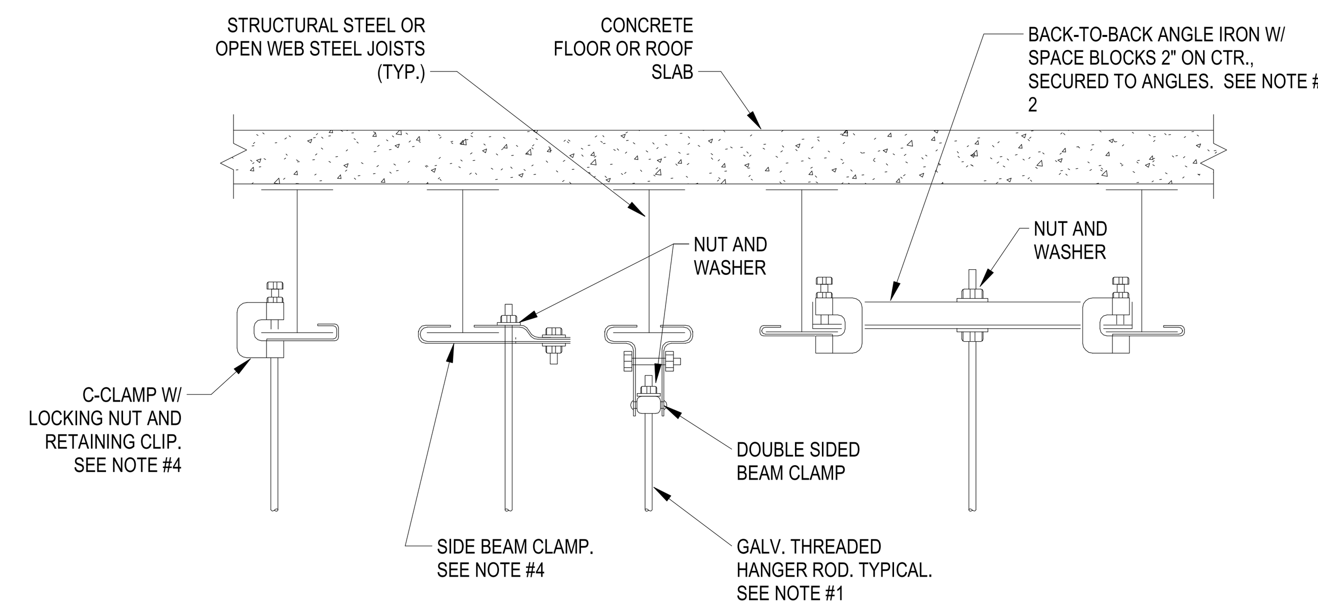

NOTES:
1. FOR CEILING SUSPENDED EQUIPMENT PROVIDE MIN. 3/8" DIA. HANGER ROD (REFER TO MANUFACTURERS INSTALLATION INSTRUCTIONS).
2. FOR PIPES UNDER 2" USE A SINGLE 1-1/2"x1-1/2"x1/4" ANGLE IRON WITH C-CLAMP. FOR PIPES 2-1/2" AND LARGER USE 3"x3"x1/4" ANGLE IRON BACK TO BACK AS SHOWN.
3. REPAIR OF FIREPROOFING IN ORDER TO FACILITATE THE INSTALLATION OF HANGER RODS IN EXISTING CONSTRUCTION SHALL BE BY THE G.C.
4. USE OF C-CLAMPS AND SIDE BEAM CLAMPS IS LIMITED TO PIPING 2-1/2" AND UNDER.

6 SECURING HANGER RODS TO STRUCTURAL STEEL
NOT TO SCALE

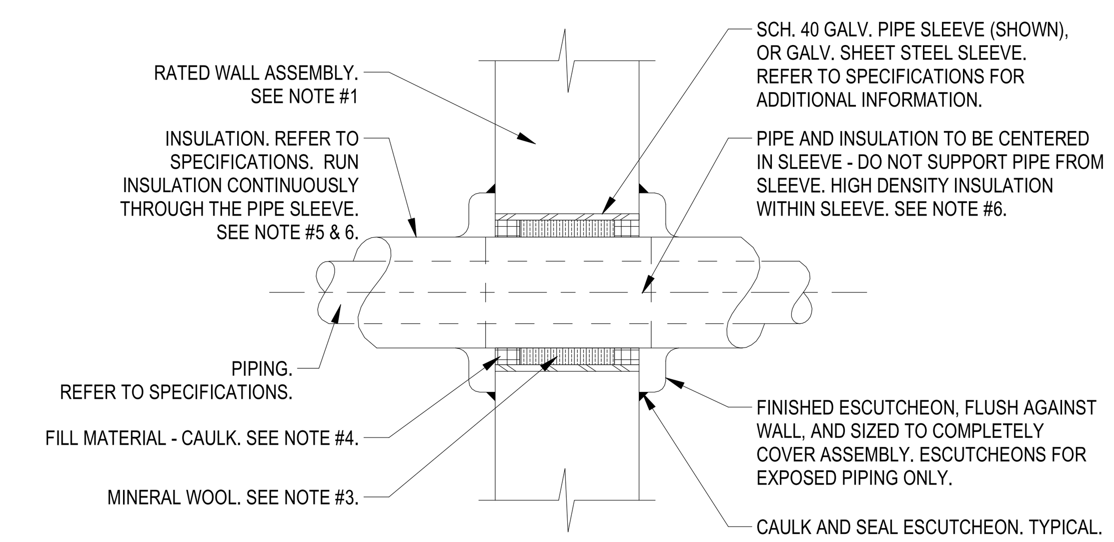

NOTES:
1. REFER TO THE ARCHITECTURAL AND STRUCTURAL DOCUMENTS FOR WALL ASSEMBLY CONSTRUCTION.
2. BASED ON THE WALL ASSEMBLY AND ITS RATING, THE MECHANICAL CONTRACTOR SHALL COORDINATE THE FIRE STOP SYSTEM REQUIREMENTS IN STRICT ACCORDANCE WITH THE UL FIRE RESISTANCE DIRECTORY. REFER TO SPECIFICATIONS, DIVISION 7, FOR ADDITIONAL INFORMATION.
3. MIN. 4 PCF MINERAL WOOL BATT INSULATION FIRMLY PACKED INTO OPENING AS A PERMANENT FORM. THICKNESS IS BASED ON ASSEMBLY RATING. REFER TO NOTE #2. PACKING MATERIAL TO BE RECESSED FROM BOTH SURFACES OF WALL AS REQUIRED TO ACCOMMODATE THE REQUIRED THICKNESS OF FILL MATERIAL.
4. MIN 1 IN. THICKNESS OF FILL MATERIAL APPLIED WITHIN THE ANNULUS, FLUSH WITH BOTH ENDS OF STEEL SLEEVE. WHEN SLEEVE PROJECTS BEYOND SURFACE OF WALL, A BEAD OF CAULK SHALL BE APPLIED TO OUTER PERIMETER OF SLEEVE AT INTERFACE WITH WALL SURFACES. COORDINATE THICKNESS OF BEAD TO SUIT THE FIRE STOP SYSTEM REQUIRED FOR THE ASSEMBLY BEING PENETRATED. REFER TO NOTE #2.
5. WHERE FLUID CONVEYED THROUGH PIPING IS BELOW AMBIENT TEMP. ALL SEAMS AND JOINTS IN THE INSULATION SHALL BE SEALED TO ENSURE A CONTINUOUS VAPOR BARRIER. REFER TO SPECIFICATIONS.
6. WHERE PIPING IS REQUIRED TO BE INSULATED, PROVIDE MAX 2 IN. THICK HOLLOW CYLINDRICAL HEAVY DENSITY (MIN 3.5 PCF) GLASS FIBER UNITS, JACKETED ON THE OUTSIDE WITH AN ALL-SERVICE JACKET. LONGITUDINAL JOINTS SEALED WITH FACTORY APPLIED SELF-SEALING LAP TAPE. TRANSVERSE JOINTS SECURED WITH BUTT TAPE SUPPLIED WITH THE PRODUCT. THE ANNULAR SPACE BETWEEN THE PENETRATING ITEM AND THE PERIPHERY OF THE OPENING SHALL BE MIN 1/4 IN. TO MAX 2 IN. THE PIPE COVERING SHALL MEET THE ABOVE CRITERIA AND BEAR THE UL CLASSIFICATION MARKING WITH A FLAME SPREAD AND SMOKE DEVELOPED INDEX AS NOTED IN THE SPECIFICATIONS.
7. PIPING SHALL BE SUPPORTED ON EITHER SIDE OF WALL. PIPE SUPPORTS SHALL BE COMPLETELY INDEPENDENT OF WALL.

2 PIPING PENETRATIONS AT INTERIOR RATED WALLS
NOT TO SCALE

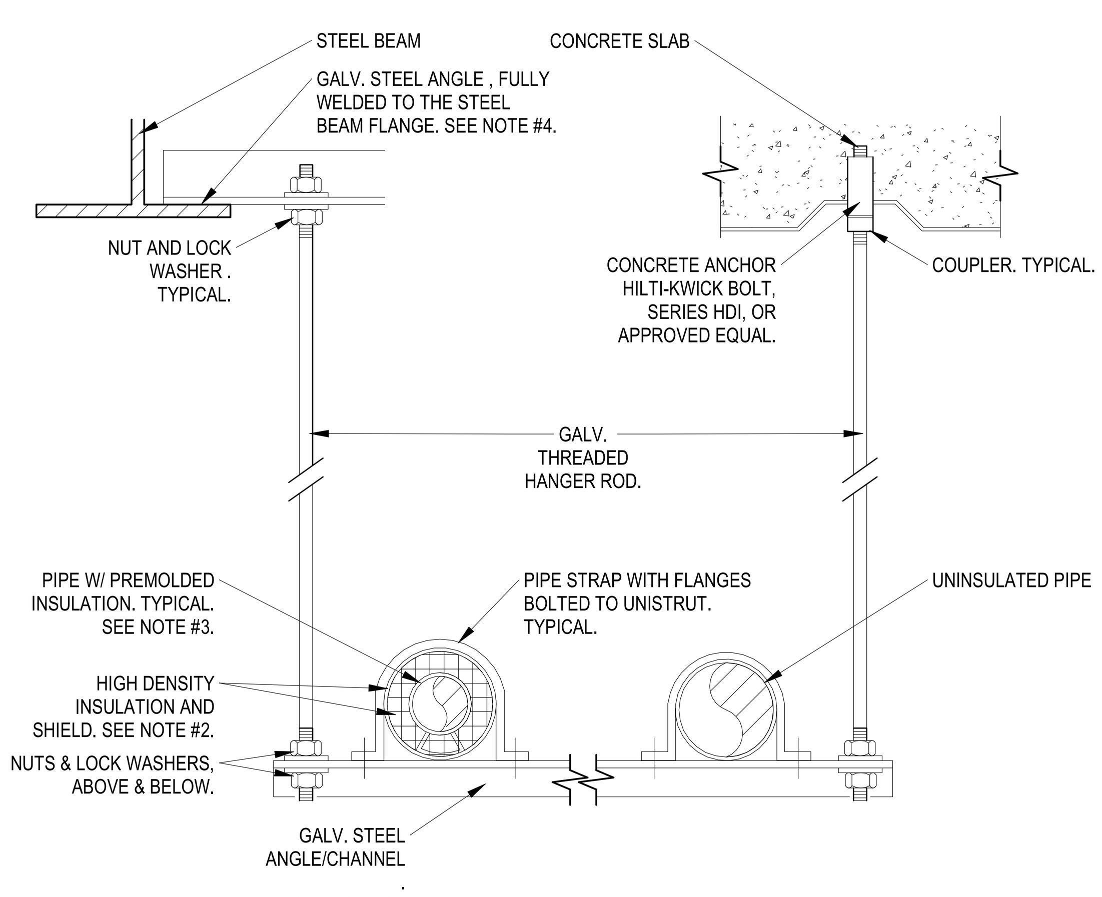

NOTES:
1. HANG FROM FLANGE OF STEEL BEAMS OR TOP CHORD OF JOISTS AT PANEL POINTS ONLY. DO NOT HANG FROM BOTTOM CHORD OF JOISTS OR METAL DECKING.
2. FOR ALL INSULATED PIPING: PROVIDE FULLY-CYLINDRICAL (360°) GALVANIZED INSULATION SHIELD AND HIGH DENSITY INSULATION FOR PIPES UP TO 2", OR PROTECTIVE PIPE SADDLE FOR PIPES 2.5" & OVER. SHIELD AND HD INSULATION SHALL BE A MIN. OF 12" LONG, CENTERED ON HANGER.
3. FOR PIPING SYSTEMS CONVEYING FLUIDS BELOW AMBIENT CONDITIONS, PROVIDE A CONTINUOUS A CONTINUOUS VAPOR BARRIER AROUND ALL INSULATION. INSULATE THE CAVITIES OF ALL PROTECTIVE SADDLES AND CAULK AT ALL JOINTS TO ENSURE THE VAPOR BARRIER INTEGRITY. REFER TO SPECIFICATIONS FOR APPROVED VAPOR BARRIER AND CAULKING.
4. COORDINATE THE NUMBER OF PIPES REQUIRED PER TRAPEZE. THE STEEL ANGLE/CHANNEL SHALL BE SIZED BY A CONTRACTOR DELEGATED DESIGN. THE TOTAL WEIGHT AT EACH HANGER SHALL INCLUDE, BUT NOT LIMITED TO: THE WEIGHT OF THE PIPE WITH LIQUID, INSULATION, SHIELDS, SADDLES, PIPING SUPPORT COMPONENTS, ETC...

4 PIPE HANGING - TRAPEZE
NOT TO SCALE

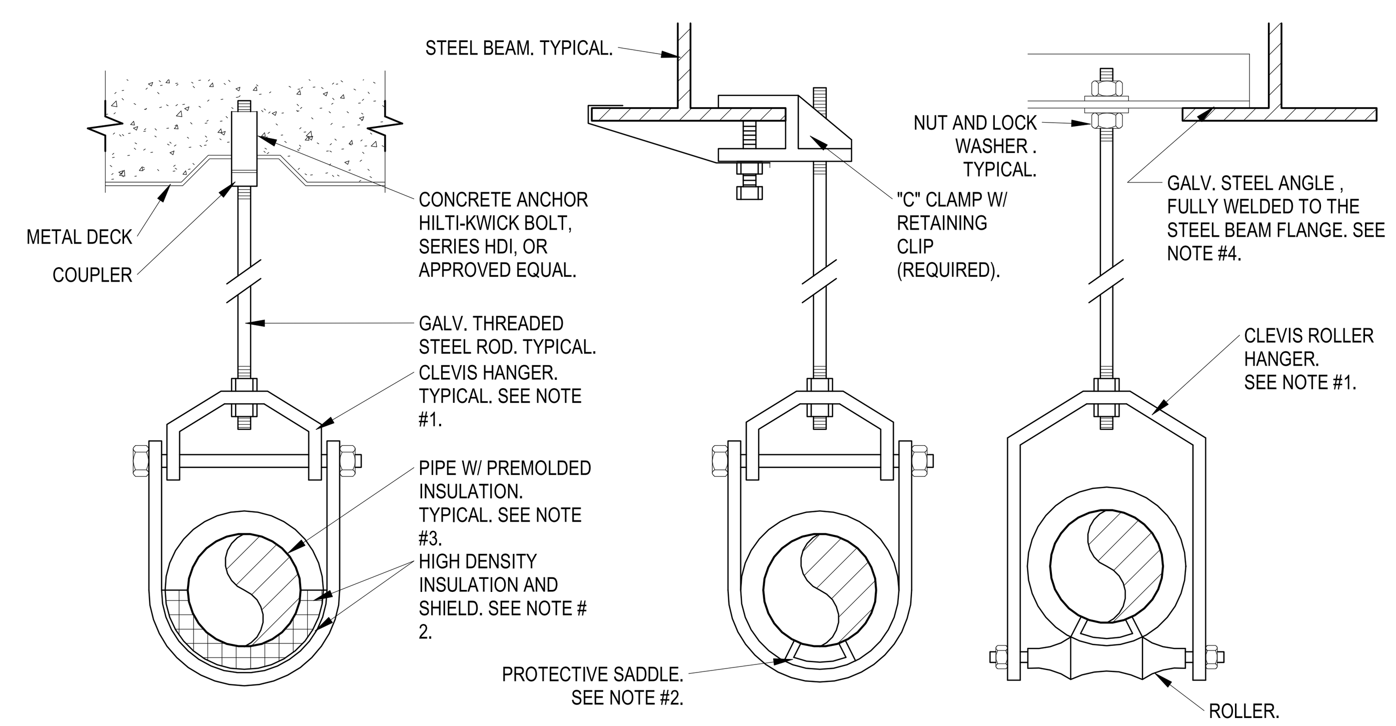

HANGER ROD SPACING (STEEL PIPE)												
PIPE SIZE (IN.)	UP TO 1"	1-1/4"	1-1/2"	2"	2-1/2"	3"	4"	5"	6"	8"	10"	12"
MAX ALLOWABLE SPACING (FT)	7	8	9	10	11	12	14	16	17	19	20	23

HANGER ROD SCHEDULE (STEEL PIPE)			
PIPE SIZE	ROD SIZE	PIPE SIZE	ROD SIZE
UP TO 2"	3/8" DIA.	4" THRU 5"	5/8" DIA.
2-1/2" THRU 3"	1/2" DIA.	6" THRU 12"	7/8" DIA.

NOTES:
1. CLEVIS HANGERS REQUIRED ON PIPING LARGER THAN 1". GENERAL PURPOSE HANGERS MAY BE USED ON PIPING 1" OR SMALLER.
2. FOR ALL INSULATED PIPING: PROVIDE SEMI-CYLINDRICAL GALVANIZED INSULATION SHIELD AND HIGH DENSITY INSULATION FOR PIPES UP TO 2", OR PROTECTIVE PIPE SADDLE FOR PIPES 2.5" & OVER. SHIELD AND HD INSULATION SHALL BE A MIN. OF 12" LONG, CENTERED ON HANGER.
3. FOR PIPING SYSTEMS CONVEYING FLUIDS BELOW AMBIENT CONDITIONS, PROVIDE A CONTINUOUS A CONTINUOUS VAPOR BARRIER AROUND ALL INSULATION. INSULATE THE CAVITIES OF ALL PROTECTIVE SADDLES AND CAULK AT ALL JOINTS TO ENSURE THE VAPOR BARRIER INTEGRITY. REFER TO SPECIFICATIONS FOR APPROVED VAPOR BARRIER AND CAULKING.
4. THE STEEL ANGLE/CHANNEL SHALL BE SIZED BY A CONTRACTOR DELEGATED DESIGN. THE TOTAL WEIGHT AT EACH HANGER SHALL INCLUDE, BUT NOT LIMITED TO: THE WEIGHT OF THE PIPE WITH LIQUID, INSULATION, SHIELDS, SADDLES, PIPING SUPPORT COMPONENTS, ETC...

5 PIPE HANGER - CLEVIS
NOT TO SCALE

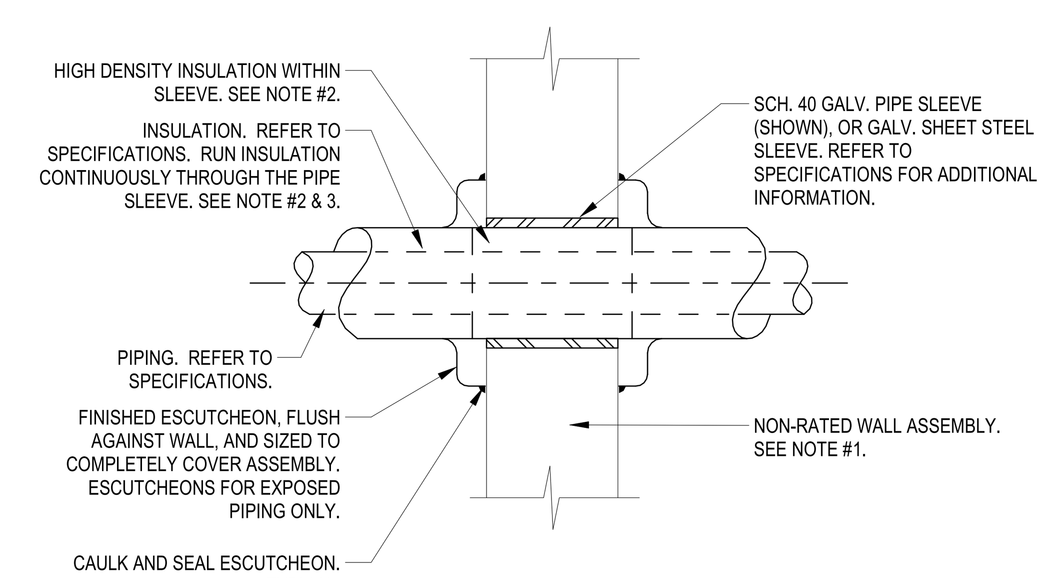

NOTES:
1. REFER TO THE ARCHITECTURAL AND STRUCTURAL DOCUMENTS FOR WALL ASSEMBLY CONSTRUCTION.
2. WHERE FLUID CONVEYED THROUGH PIPING IS BELOW AMBIENT TEMP. ALL SEAMS AND JOINTS IN THE INSULATION SHALL BE SEALED TO ENSURE A CONTINUOUS VAPOR BARRIER. REFER TO SPECIFICATIONS.
3. WHERE PIPING IS REQUIRED TO BE INSULATED, PROVIDE MAX 2 IN. THICK HOLLOW CYLINDRICAL HEAVY DENSITY (MIN 3.5 PCF) GLASS FIBER UNITS, JACKETED ON THE OUTSIDE WITH AN ALL-SERVICE JACKET. LONGITUDINAL JOINTS SEALED WITH FACTORY APPLIED SELF-SEALING LAP TAPE. TRANSVERSE JOINTS SECURED WITH BUTT TAPE SUPPLIED WITH THE PRODUCT. THE PIPE COVERING SHALL MEET THE ABOVE CRITERIA AND BEAR THE UL CLASSIFICATION MARKING WITH A FLAME SPREAD AND SMOKE DEVELOPED INDEX AS NOTED IN THE SPECIFICATIONS.
4. PIPING SHALL BE SUPPORTED ON EITHER SIDE OF WALL. PIPE SUPPORTS SHALL BE COMPLETELY INDEPENDENT OF WALL.

1 PIPING PENETRATIONS AT INTERIOR NON-RATED WALLS
NOT TO SCALE

Architecture
Engineering
Environmental
Land Surveying
BL Companies
355 Research Parkway
Meriden, CT 06450
(203) 630-1406
(203) 630-2615 Fax

JESSE E. VOSE
REGISTERED
PROFESSIONAL ENGINEER
MECHANICAL

PAWTUCKET-CENTRAL FALLS TRANSIT CENTER
300 PINE STREET PAWTUCKET, RI

REVISIONS
NO | DATE | DESCRIPTION

Designed: GM
Drawn: NV
Reviewed: JJ
Project No.: 2301115
Date: 04/09/2024
Issued for:
CONSTRUCTION DOCUMENTS

Title:
PLUMBING DETAILS

Sheet No.
P502

4/4/2024 2:04:38 PM C:\Users\nvieira\Documents\2301115_RIPTA_PassengerFacility_R23_MEP_nvieiraXGS64.rvt

© 2022 BL COMPANIES, INC. THESE DRAWINGS SHALL NOT BE UTILIZED BY ANY PERSON, FIRM OR CORPORATION WITHOUT THE SPECIFIC WRITTEN PERMISSION OF BL COMPANIES.

PLUMBING DRAINAGE SPECIALTIES SCHEDULE

GENERAL NOTE:
PROVIDE SUPPORTS, TRAPS, ADAPTERS, ETC. AND NECESSARY FITTINGS TO MAKE FINAL CONNECTION. REFER TO SPECIFICATION FOR MISCELLANEOUS DRAINAGE SPECIALTIES AND FOR DRAINAGE SPECIALTIES ITEMS EQUIVALENTS.

TAG	SPECIALTY ITEM	MFR	MODEL	DESCRIPTION	REMARKS
FCO	FLOOR CLEANOUT (ROUND)	J.R. SMITH	4020-U	CAST IRON CLEANOUT, WITH ROUND ADJUSTABLE NICKEL-BRONZE TOP, GASKET SEAL AND BRONZE PLUG, VANDAL PROOF TOP.	PROVIDE "Y" CARPET MARKER FOR CARPET FINISHED FLOORS, REFER TO PLANS FOR SIZE.
FD1	FLOOR DRAIN	J.R. SMITH	2005Y-A-U	CAST IRON BODY WITH FLASHING COLLAR, 6"DIA. ROUND NICKEL-BRONZE ADJUSTABLE STRAINER. VANDAL PROOF SCREWS. INSTALL W/ PROSET #TG3H TRAP GUARD	REFER TO PLANS FOR SIZE.
WCO	WALL CLEANOUT	J.R. SMITH	4402-U	FACE OF-WALL CHROME-PLATED BRONZE ROUND FRAME AND SECURED COVER. VANDAL PROOF SCREWS.	

PLUMBING WATER SPECIALTIES SCHEDULE

GENERAL NOTE:
PROVIDE SUPPORTS, TRAPS, ADAPTERS, ETC. AND NECESSARY FITTINGS TO MAKE FINAL CONNECTION. REFER TO SPECIFICATION FOR MISCELLANEOUS DRAINAGE SPECIALTIES AND FOR DRAINAGE SPECIALTIES ITEMS EQUIVALENTS.

TAG	SPECIALTY ITEM	MFR	MODEL	DESCRIPTION	REMARKS
BV1	BALANCING VALVE	BELL & GOSSETT	CIRCUIT SETTER PLUS	CALIBRATED BALANCING VALVE WITH BRONZE BODY	
ETP1	ELECTRONIC TRAP PRIMER DEVICE	PPP	MPB-500	MINI-PRIME ELECTRONIC TRAP PRIMING DEVICE HOUSED IN NEMA METAL BOX WITH COVER. UNIT SHALL EMPLOY SOLENOID VALVE, AIR GAP AND ELECTRONIC CONTROLLER.	PROVIDE DISTRIBUTION UNITS #DU-2, 3 OR 4 FOR MULTIPLE DRAIN PRIMING. NUMBER OF "DU" TO BE DETERMINED BY THE CONTRACTOR PER MANUFACTURER RECOMMENDATION.
HB1	HOSE BIBB (INTERIOR)	WOODFORD	26P	CHROME FINISHED CONSTRUCTION WALL FAUCET WITH VACUUM BREAKER - BACKFLOW PREVENTER IN WALL BOX , 3/4"HOSE CONNECTION AND WHEEL HANDLE	
HB2	WALL HYDRANT (NON-FREEZE)	WOODFORD	RB67	POLISHED BRASS FREEZELESS WALL HYDRANT WITH INTEGRAL VACUUM BREAKER (ASSE 1052), CHROME COVER, 3/4"HOSE CONNECTION "TEE" HANDLE KEY. WALL HYDRANT (RECESSED)	SEE ARCHITECTURAL PLANS FOR WALL THICKNESS
IMB1	ICE MAKER BOX	SIOUX CHIEF	696-G1010	QUARTER TURN BALL VALVE, 1/2" INLET, 1/4" OUTLET, MINI-ARRESTER, BRACKET, DEBRIS COVER AND FRAME.	
PRV1	PRESSURE REDUCING VALVE	WATTS	LF-223-HP	PRESSURE REDUCING VALVE, LEAD FREE CAST COPPER SILICON ALLOY BODY CONSTRUCTION ENLARGED DIAPHRAGM, SPRING CAGE AND SEAT ORIFICE	
RH1	ROOF HYDRANT (NON-FREEZE)	WOODFORD	SRH-MS	NON-FREEZE, ANTI-SIPHON, ASSE 1057 CERTIFIED, 1-1/2" GALVANIZED PIPE WITH 3/4" FEMALE NPT INLET, 3/4" THREADED BRASS OUTLET WITH ASSE 1052 DUEL CHECK BACKFLOW PREVENTER AND AUTOMATIC DRAIN, AIR VENT AND VARIABLE FLOW PLUNGER. UNIT COMPLETE WITH ROOF MOUNTING BRACKET SYSTEM CONSISTING OF CAST BRASS HYDRANT SUPPORT, BOOT COVER, 2" CAST SHIM FOR PITCHED ROOFS, AND UNDER-DECK CAST FLANGE WITH MOUNTING BOLT	
RPZ	BACKFLOW PREVENTER	WATTS	LF009-QT-S	LEAD FREE REDUCED PRESSURE BACKFLOW PREVENTER, ALL BRONZE BODY CONSTRUCTION WITH STRAINER & QUARTER TURN BALL VALVES. #909AG FIXED AIR GAP.	PIPE RELIEF TO FLOOR DRAIN OR AS INDICATED ON DWG'S.
TMV1	HI-LOW THERMOSTATIC MIXING VALVE (BUILDING)	WATTS	LFLM490	1" THERMOSTATIC MIXING VALVE. LEAD FREE BRASS BODY, THERMAL ACTUATOR IMPROVES PERFORMANCE AT LOW FLOW, ADJUSTABLE TEMPERATURE SELECTION WITH LOCK DOWN, INTEGRAL CHECKS AND SCREEN, BRASS FITTING AND UNIONS.	
TP1	TRAP PRIMER DEVICE	PPP	PRO1-500	FLOW ACTIVATED INLINE FLOOR DRAIN TRAP PRIMER. INSTALL ON 1/2" COLD WATER LINE. PIPE DISCHARGE IN WALL TO FLOOR DRAIN. EQUIPPED WITH VACUUM BREAKER PORTS AND INTERNAL BACK-FLOW PROTECTION. THE VALVE IS ACTIVATED AT A MINIMUM FLOW RATE OF 0.25 GPM AT 20 PSIG.	PROVIDE DISTRIBUTION UNITS #DU-2, 3 OR 4 FOR MULTIPLE DRAIN PRIMING. NUMBER OF "DU" TO BE DETERMINED BY THE CONTRACTOR PER MANUFACTURER RECOMMENDATION.
WHA	WATER HAMMER ARRESTORS	SIOUX CHIEF	650 SERIES	HYDRA-RESTER, SEAMLESS PRESSURE CHAMBER. SPUN CLOSED COPPER TUBE PERMANENTLY SEALS A 60 PSIG. SHALL CONFORM TO ASME/ANSI STANDARDS AND PDI CERTIFIED. INSTALL PER FACTORY RECOMMENDATION. LIFETIME WARRANTY	PROVIDE AT QUICK CLOSING VALVES

WATER HEATER & MISCELLANEOUS EQUIPMENT SCHEDULE

TAG	EQUIPMENT TYPE	BASIS OF DESIGN		CAPACITY (GALLONS)	RECOVERY (GPH @ TEMP RISE)	TEMP RISE (DEG. F)	ELEC				COMMENTS
		MFR	MODEL				V	PH	A	KW	
EXP1	EXPANSION TANK	AMTROL	THERM-X-TROL ST-5	2							8" DIA X 13" HIGH, ASME PRECHARGED THERMAL EXPANSION TANK, WITH A HEAVY DUTY BUTYL BLADDER SUITABLE FOR DOMESTIC POTABLE WATER SYSTEM, ALL INTERNAL WETTED PARTS MUST COMPLY WITH FDA REGULATIONS. THE TANK MUST BE CONSTRUCTED IN ACCORDANCE WITH ASME TANKS MEET SECTION VIII, DIVISION 1 STANDARDS. RATED FOR 150 PSI WORKING PRESSURE AND 200°F TEMPERATURE.
WH-1	ELECTRIC WATER HEATER	HTP	EVR020A1X020N10	20	9	90	120	1	-	2	STAINLEES STEEL TANK, 29" HIGH x 19.5" DIA., OUTLET TEMPERATURE SET TO 140°F. WATER HEATER TO BE MOUNTED WITHIN A WATER HEATER PAN ON A HOLDRITE WALL MOUNTED PLATFORM 40-SWHP-W. WATER HEATER T&P DRAIN LINE AND PAN DRAIN LINE TO BE PIPED INDIRECT TO MOP SINK.

WATER DISTRIBUTION PUMP SCHEDULE

TAG	EQUIPMENT TYPE	MFR	MODEL	FLOW RATE (GPM)	HEAD (FT H_2O)	RPM	ELECTRICAL				REMARKS
							V	PH	Max Amps	WATTS	
RP-1	INLINE CIRCULATION PUMP	TACO	0034e-SS	3	15		115	1	1.48	10-170	LOCATE NEAR WATER HEATER

PLUMBING FIXTURE SCHEDULE

GENERAL NOTES: PIPE SIZES SHOWN ARE FOR SUPPLY AND DRAINAGE ONLY. PROVIDE SUPPLIES WITH 1/4 TURN BALL STOPS, SEMI-CAST "P" TRAPS, PLUMBING FIXTURE SUPPORTS AND NECESSARY FITTINGS TO MAKE FINAL CONNECTION. REFER TO SPECIFICATION FOR EQUIVALENTS AND ARCHITECTURAL DOCUMENTS FOR EXACT PLUMBING FIXTURE MOUNTING HEIGHTS.

TAG	FIXTURE TYPE	MOUNT	MFR	MODEL	DESCRIPTION	FAUCET, FLUSH VALVE AND TRIM	REMARKS
EWC	ELECTRIC WATER COOLER WITH BOTTLE FILLER	WALL	ELKAY	LZSTL8WSVRSK	BARRIER-FREE, WALL MOUNTED, STAINLESS STEEL TOP, WELDED STEEL FRAME, IN-LINE FLOW REGULATOR FOR CONSTANT STREAM.	FRONT AND SIDE PUSH BAR ACTIVATED VALVES, 8.0 GPH AT 50 DEGREES FAHRENHEIT WITH 80 DEGREE INLET WATER TEMPERATURE, 90 DEGREE FAHRENHEIT AMBIENT, 115V, 6.0A, 370 WATTS, 1/2" x 3/8" O.D. SWEAT ANGLE STOP, TUBULAR P-TRAP, MOUNT 36" TO BUBBLER OF HANDICAP UNIT FROM FINISHED SURFACE.	
L1	LAVATORY	WALL	BRADLEY	ELX-3	EXPRESS LAVATORY SYSTEM 3-STATION, ONE-PIECE LAVATORY AND SINGLE FAUCET HOLE PER STATION. COLOR TO BE SELECTED BY ARCHITECT.	SUPPLY FITTING: BRADLEY VERGE CRESTT SERIES MODEL S53-3100, 0.35GPM MULTI-LAMINAR SPRAY, HARD-WIRED OPERATED SENSOR ACTIVATED FAUCET WITH NAVIGATOR THERMOSTATIC MIXING VALVE SET AT 110°F MAXIMUM AND ADA OFFSET TAILPIECE. COLOR TO BE SELECTED BY ARCHITECT.	
L2	LAVATORY	WALL	AMERICAN STANDARD	0356.421	"LUCERNE", 21-1/4" x 18-1/4" VITREOUS CHINA FRONT OVERFLOW.COLOR SHALL BE WHITE.	SLOAN OPTIMA FAUCET MODEL ETF-80, 0.35 GPM MULTI-LAMINAR SPRAY, HARD-WIRED SENSOR ACTIVATED FAUCET WITH BDT THERMOSTATIC MIXING VALVE SET AT 110°F MAXIMUM. PROVIDE BRASS CRAFT 1/4 TURN ANGLE STOPS WITH BRAIDED SUPPLY LINES.	PROVIDE J.R. SMITH 0700 (CONCEALED ARMS) WITH 19" ARMS 0800 (WALL SUPPORT PLATE). INSULATE ALL EXPOSED WATER AND WASTE PIPING BELOW COUNTER WITH MCGUIRE PW2125WC.
MS1	MOP SINK	WALL	FIAT	MSBIDTG2424	24"x24"x10", FLOOR MOUNTED, ONE PIECE MOLDED STONE WITH 10" HIGH WALLS, NOT LESS THAN 1" WIDE SHOULDERS, INTEGRAL DRAIN WITH QIC3XH GASKET, COMBINATION DOME STRAINER AND LINT BASKET. PROVIDE FIAT NO. QIC3SN QUICK DRAIN CONNECTOR.	SERVICE FAUCET FIAT MODEL 830AA, 8" CENTERS, WALL MOUNTED, CHROME PLATED, VACUUM BREAKER, INTEGRAL STOPS, ADJUSTABLE WALL BRACE, PAIL HOOK, AND 3/4" HOSE THREAD ON SPOUT, 3" CAST IRON P-TRAP, FIAT MODEL NO. 899CC MOP HANGER, NO. MSG2424 WALL GUARD, NO. 832AA HOSE AND BRACKET.	
SK1	GENERAL SINK SINGLE BOWL	COUNTER	ELKAY	LRAD221965	18 GAUGE, TYPE 304 STAINLESS STEEL SINK, SELF RIMMING, (3) FAUCET HOLES, 22"x19"x 6.5" DEEP BOWL, STRAINER AND TAILPIECE.	FAUCET: CHICAGO FAUCETS MODEL 786-E35ABCP SWIVEL GOOSENECK FAUCET WITH WRIST BLADE HANDLES, 1.5 GPM FLOW AERATOR.	INSULATE ALL EXPOSED WATER AND WASTE PIPING BELOW COUNTER WITH MCGUIRE PW2125WC.
U1	URINAL	WALL	AMERICAN STANDARD	6515.001	WHITE VITREOUS CHINA, 0.125 GALLON PER FLUSH , ULTRA HIGH EFFICIENCY URINAL. WALL HUNG, WASHOUT DESIGN, 3/4" BACK SPUD, 2" I.P.S. OUTLET, WALL HANGERS AND BEEHIVE STRAINER.	FLUSH VALVE: SLOAN 195 ESS-0.125-TMO-SWB, HARDWIRED, INFRARED SENSOR ACTIVATED AND MECHANICAL OVERRIDE BUTTON.	J.R. SMITH, ADJUSTABLE FIXTURE SUPPORTS URINAL CARRIERS #0600 SERIES
U2	URINAL	WALL	AMERICAN STANDARD	6515.001	WHITE VITREOUS CHINA, 0.125 GALLON PER FLUSH , ULTRA HIGH EFFICIENCY URINAL. WALL HUNG, WASHOUT DESIGN, 3/4" BACK SPUD, 2" I.P.S. OUTLET, WALL HANGERS AND BEEHIVE STRAINER.	FLUSH VALVE: SLOAN 195 ESS-0.125-TMO-SWB, HARDWIRED, INFRARED SENSOR ACTIVATED AND MECHANICAL OVERRIDE BUTTON.	J.R. SMITH, ADJUSTABLE FIXTURE SUPPORTS URINAL CARRIERS #0600 SERIES
W1	WATER CLOSET	WALL	AMERICAN STANDARD	3353.101	"AFWALL"(OR APPROVED EQUAL) WHITE VITREOUS CHINA, 1.28 GALLONS PER FLUSH, WALL HUNG, ELONGATED BOWL DESIGN, SIPHON JET FLUSHING WITH 1-1/2" BACK SPUD. COLOR SHALL BE WHITE. MOUNT FIXTURE WITH BOWL HEIGHT AT 18" ABOVE FINISHED FLOOR TO MEET HANDICAPPED REQUIREMENTS.	FLUSH VALVE: SLOAN 611-1.28 ESS-TMO-SWB, HARDWIRED, INFRARED SENSOR ACTIVATED AND MECHANICAL OVERRIDE BUTTON.. SEAT: BENEKE NO. 523-SS WHITE OPEN FRONT SEAT WITHOUT COVER WITH CONCEALED CHECK HINGE.	J.R. SMITH, HORIZONTAL, ADJUSTABLE CARRIER (OR APPROVED EQUAL).
W2	WATER CLOSET	WALL	AMERICAN STANDARD	3353.101	"AFWALL"(OR APPROVED EQUAL) WHITE VITREOUS CHINA, 1.28 GALLONS PER FLUSH, WALL HUNG, ELONGATED BOWL DESIGN, SIPHON JET FLUSHING WITH 1-1/2" BACK SPUD. COLOR SHALL BE WHITE.	FLUSH VALVE: SLOAN 611-1.28 ESS-TMO-SWB, HARDWIRED, INFRARED SENSOR ACTIVATED AND MECHANICAL OVERRIDE BUTTON.. SEAT: BENEKE NO. 523-SS WHITE OPEN FRONT SEAT WITHOUT COVER WITH CONCEALED CHECK HINGE.	J.R. SMITH, HORIZONTAL, ADJUSTABLE CARRIER (OR APPROVED EQUAL).

FIXTURE CONNECTION SCHEDULE

TYPE OF FIXTURE		MINIMUM SIZE UTILITY FIXTURE			
NUMBER	DESCRIPTION	SOIL/ WASTE	VENT	HOT WATER SUPPLY	COLD WATER SUPPLY
EWC	ELECTRIC WATER COOLER	1 1/2"	1 1/2"	---	1/2"
FD	FLOOR DRAIN	SEE DWGS	SEE DWGS	---	---
FS	FLOOR SINK	SEE DWGS	SEE DWGS	---	---
HB1	HOSE BIBB (INTERIOR)	---	---	---	1/2"
HB2	WALL HYDRANT (EXTERIOR)	---	---	---	3/4"
L	LAVATORY	1 1/2"	1 1/2"	1/2"	1/2"
MS	MOP SINK	3"	1 1/2"	1/2"	1/2"
SH	SHOWER	2"	1 1/2"	1/2"	1/2"
SK	GENERAL SINK	1 1/2"	1 1/2"	1/2"	1/2"
U	URINAL - FLUSH VALVE	2"	1 1/2"	---	3/4"
W	WATER CLOSET - FLUSH VALVE	4"	2"	---	1"

Architecture
Engineering
Environmental
Land Surveying
BL Companies

355 Research Parkway
Meriden, CT 06450
(203) 630-1406
(203) 630-2615 Fax

JESSE E. VOSE
STATE OF RHODE ISLAND
No. 14344
HOPE
REGISTERED
PROFESSIONAL ENGINEER
MECHANICAL

PAWTUCKET-CENTRAL FALLS TRANSIT CENTER
300 PINE STREET PAWTUCKET, RI

REVISIONS

NO	DATE	DESCRIPTION

Designed: GM
Drawn: NV
Reviewed: JJ
Project No.: 2301115
Date: 04/09/2024
Issued for:
CONSTRUCTION DOCUMENTS

Title:
PLUMBING SCHEDULES

Sheet No.
P601

4/4/2024 2:04:39 PM C:\Users\nvieira\Documents\2301115_RIPTA_PassengerFacility_R23_MEP_nvieiraXGS64.rvt

© 2022 BL COMPANIES, INC. THESE DRAWINGS SHALL NOT BE UTILIZED BY ANY PERSON, FIRM OR CORPORATION WITHOUT THE SPECIFIC WRITTEN PERMISSION OF BL COMPANIES.

MECHANICAL GENERAL NOTES

1. PROVIDE ALL MATERIALS AND EQUIPMENT AND PERFORM ALL LABOR REQUIRED TO INSTALL COMPLETE AND OPERABLE MECHANICAL SYSTEMS AS INDICATED ON THE DRAWINGS, AS SPECIFIED AND AS REQUIRED BY CODE.
2. THE CONTRACTOR IS RESPONSIBLE FOR OBTAINING AND FOLLOWING OWNERS RULES AND STANDARDS PRIOR TO BID, WORK AND COMPLETION OF PROJECT.
3. THE CONTRACTOR SHALL DO THIS WORK IN ACCORDANCE WITH LOCAL LAWS AND ORDINANCES HAVING JURISDICTION. IN ADDITION TO THE BULDING PERMIT, THE CONTRACTOR SHALL OBTAIN ALL OTHER PERMITS AND APPROVALS AS REQUIRED BY LAW FOR THE COMPLETION OF THE WORK AND ISSUANCE OF A FULL CERTIFICATE OF OCCUPANCY.
4. INSTALL ALL MECHANICAL EQUIPMENT AND APPURTENANCES IN ACCORDANCE WITH MANUFACTURERS' RECOMMENDATIONS, CONTRACT DOCUMENTS, AND APPLICABLE CODES AND REGULATIONS.
5. PROVIDE ALL MATERIALS AND EQUIPMENT AND PERFORM ALL LABOR REQUIRED TO INSTALL COMPLETE AND OPERABLE MECHANICAL SYSTEMS AS INDICATED ON THE DRAWINGS, AS SPECIFIED AND AS REQUIRED BY CODE.
6. CONTRACT DOCUMENT DRAWINGS FOR MECHANICAL WORK ARE DIAGRAMMATIC AND ARE INTENDED TO CONVEY SCOPE AND GENERAL ARRANGEMENT ONLY.
7. DUCTWORK AND PIPING LAYOUTS ARE SCHEMATIC AND ARE INTENDED TO SHOW GENERAL ARRANGEMENT, SIZE, AND CAPACITY AND DO NOT INDICATE WHICH DUCT OR PIPE IS ABOVE OR BELOW THE OTHER. ALL OFFSETS ARE NOT NECESSARILY SHOWN. THE MC SHALL ARRANGE AND COORDINATE THE WORK, PROVIDE NECESSARY OFFSETS AND FITTINGS TO AVOID CONFLICT WITH OTHER MECHANICAL, PLUMBING, FIRE PROTECTION AND ELECTRICAL SERVICES AND STRUCTURAL AND ARCHITECTURAL ELEMENTS WITHOUT ADDITIONAL COST TO THE OWNER. IF AREAS OF CONFLICT ARE ENCOUNTERED, THE MC SHALL SUBMIT RECOMMENDATIONS FOR CORRECTIVE ACTION TO THE ENGINEER OF RECORD FOR APPROVAL PRIOR TO WORK BEING PERFORMED.
8. ALL HVAC SYSTEMS MOVING AIR IN EXCESS OF 2,000 CFM SHALL BE PROVIDED WITH A DUCT MOUNTED SMOKE DETECTOR MOUNTED IN THE SUPPLY & RETURN AIR STREAM IN ACCORDANCE WITH THE LATEST EDITION OF THE STATE'S MECHANICAL CODE. WHERE THE SMOKE DETECTOR IS MOUNTED EXPOSED TO THE OUTDOORS, THE DETECTOR HEAD SHALL BE MOUNTED IN AN APPROVED WEATHERPROOF ENCLOSURE. THE DUCT MOUNTED SMOKE DETECTORS SHALL BE FURNISHED AND WIRED BY DIV. 27 AND MOUNTED BY DIV. 23. PROVIDE AUXILIARY CONTACTS FOR ALL AIR-HANDLING UNIT FAN MOTOR STARTERS AND THEIR RESPECTIVE SMOKE DETECTORS FOR SHUT-DOWN OF FANS UPON SENSING OF THE PRODUCTS OF COMBUSTION. WHERE SMOKE DETECTORS ARE FACTORY-INSTALLED IN THE MECHANICAL EQUIPMENT, MEANS SHALL BE PROVIDED BY DIV. 26 FOR INTEGRATION WITH THE CENTRAL FIRE ALARM SYSTEM. THE MC SHALL COORDINATE WITH DIV. 26.
9. PROVIDE VIBRATION ISOLATION FOR ALL MECHANICAL EQUIPMENT TO PREVENT TRANSMISSION OF VIBRATION TO BUILDING STRUCTURE.
10. COORDINATE CONSTRUCTION OF ALL MECHANICAL WORK WITH ELECTRICAL WORK, ETC., SHOWN ON OTHER CONTRACT DOCUMENT DRAWINGS.
11. MAINTAIN A MINIMUM OF 7'-6" CLEARANCE TO UNDERSIDE OF PIPES, DUCTS, CONDUITS, SUSPENDED EQUIPMENT, ETC., THROUGHOUT ACCESS ROUTES IN MECHANICAL ROOMS.
12. ALL TESTS SHALL BE COMPLETED BEFORE ANY MECHANICAL EQUIPMENT, DUCTWORK OR PIPING INSULATION IS APPLIED.
13. LOCATE ALL TEMPERATURE, PRESSURE, AND FLOW MEASURING DEVICES IN ACCESSIBLE LOCATIONS WITH STRAIGHT SECTION OF PIPE OR DUCT UP- AND DOWNSTREAM AS RECOMMENDED BY THE MANUFACTURER FOR GOOD ACCURACY.
14. TESTING, ADJUSTING, AND BALANCING AGENCY SHALL BE A MEMBER OF THE ASSOCIATED AIR BALANCE COUNCIL (AABC) OR THE NATIONAL ENVIRONMENTAL BALANCING BUREAU (NEBB). TESTING, ADJUSTING, AND BALANCING SHALL BE PERFORMED IN ACCORDANCE WITH THE AABC STANDARDS.
15. WHERE TWO OR MORE ITEMS OF THE SAME TYPE OF EQUIPMENT ARE REQUIRED, THE PRODUCT OF ONE MANUFACTURER SHALL BE USED.
16. COORDINATE ALL EQUIPMENT CONNECTIONS WITH MANUFACTURERS' CERTIFIED DRAWINGS. COORDINATE AND PROVIDE ALL DUCT AND PIPING TRANSITIONS REQUIRED FOR FINAL EQUIPMENT CONNECTIONS TO FURNISHED EQUIPMENT. FIELD VERIFY AND COORDINATE ALL DUCT AND PIPING DIMENSIONS BEFORE FABRICATION.
17. ALL CONTROL WIRE AND CONDUIT SHALL COMPLY WITH THE NATIONAL ELECTRIC CODE AND DIVISION 26 OF THE SPECIFICATION
18. WHERE BEAMS ARE INDICATED TO BE PENETRATED WITH DUCTWORK OR PIPING, COORDINATE DUCTWORK AND PIPING LAYOUT WITH BEAM OPENING SIZE AND OPENING LOCATIONS. COORDINATION SHALL BE DONE PRIOR TO FABRICATION OF DUCTWORK, CUTTING OF PIPING, OR FABRICATION OF BEAMS.
19. WHEN MECHANICAL WORK (HVAC, PLUMBING, SHEET METAL, FIRE PROTECTION, ETC.) IS SUBCONTRACTED, IT SHALL BE THE MECHANICAL CONTRACTOR'S RESPONSIBILITY TO COORDINATE SUBCONTRACTORS AND THE ASSOCIATED CONTRACTS. WHEN DISCREPANCIES ARISE PERTAINING TO WHICH CONTRACTOR PROVIDES A PARTICULAR ITEM OF THE MECHANICAL CONTRACT OR WHICH CONTRACTOR PROVIDES FINAL CONNECTIONS FOR A PARTICULAR ITEM OF THE MECHANICAL CONTRACT, IT SHALL BE BROUGHT TO THE ATTENTION OF THE MECHANICAL CONTRACTOR, WHOSE DECISION SHALL BE FINAL.
20. THE LOCATIONS OF ALL ITEMS SHOWN ON THE DRAWINGS OR CALLED FOR IN THE SPECIFICATIONS THAT ARE NOT DEFINITELY FIXED BY DIMENSIONS ARE APPROXIMATE ONLY. THE EXACT LOCATIONS NECESSARY TO SECURE THE BEST CONDITIONS AND RESULTS MUST BE DETERMINED BY THE PROJECT SITE CONDITIONS AND SHALL HAVE THE APPROVAL OF THE ENGINEER BEFORE BEING INSTALLED. DO NOT SCALE DRAWINGS.
21. ALL MISCELLANEOUS STEEL REQUIRED TO ENSURE PROPER INSTALLATION AND AS SHOWN IN DETAILS FOR PIPING, DUCTWORK, AND EQUIPMENT (UNLESS OTHERWISE NOTED) SHALL BE FURNISHED AND INSTALLED BY THE MECHANICAL CONTRACTOR. ALL STEEL SHALL BE GALVANIZED WITH (2) COATS OF A RUST PROHIBITIVE PRIMER.
22. WHERE ANY MECHANICAL COMPONENTS REQUIRING MAINTENANCE OR ADJUSTMENT, (I.E. VOLUME & CONTROL DAMPERS, VALVES, PIPING SPECIALTIES, FIRE, SMOKE & COMBINATION FIRE/SMOKE DAMPERS, MECHANICAL EQUIPMENT, ETC.), ARE LOCATED IN INACCESSIBLE AREAS, FURNISH APPROPRIATELY SIZED ACCESS DOORS OR PANELS AND TURN OVER TO THE GENERAL CONTRACTOR (GC) FOR INSTALLATION. THE MECHANICAL CONTRACTOR SHALL COORDINATE WITH THE GC FOR THE PROPER LOCATIONS.
23. ALL OPENINGS IN FIRE WALLS DUE TO DUCTWORK, PIPING, CONDUIT, ETC., SHALL BE FIRE STOPPED WITH A PRODUCT SIMILAR TO 3M OR APPROVED EQUAL.
24. SEISMICALLY RESTRAIN ALL MECHANICAL EQUIPMENT, PIPING AND DUCT AS REQUIRED BY CODE.
25. PROVIDE ALL MATERIALS AND EQUIPMENT AND PERFORM ALL LABOR REQUIRED TO INSTALL COMPLETE AND OPERABLE PIPING AND DUCT SYSTEMS AS INDICATED ON THE DRAWINGS, AS SPECIFIED AND AS REQUIRED BY CODE.
26. UNLESS OTHERWISE NOTED, ELEVATIONS AS SHOWN ON THE DRAWINGS FOR PIPING ARE TO THE CENTERLINE OF ALL PRESSURE PIPING AND TO THE INVERT OF ALL GRAVITY PIPING. ELEVATIONS AS SHOWN ON THE DRAWINGS FOR DUCTWORK ARE TO BE THE "BOTTOM-OF-DUCT" (BOD).
27. OTHERWISE NOTED, ALL PIPING AND DUCTS ARE OVERHEAD, TIGHT TO UNDERSIDE OF STRUCTURE OR SLAB WITH SPACE FOR INSULATION IF REQUIRED.
28. INSTALL ALL PIPING WITHOUT FORCING OR SPRINGING.
29. ALL PIPING WORK SHALL BE COORDINATED WITH ALL TRADES INVOLVED. OFFSETS IN PIPING AROUND OBSTRUCTIONS SHALL BE PROVIDED AT NO ADDITIONAL COST TO THE OWNER.
30. UNLESS OTHERWISE NOTED, THE LOCATION OF LIGHTING AND SPRINKLER HEADS TAKES PRECEDENCE OVER THE LOCATIONS OF REGISTER, GRILLES & DIFFUSERS (RGDs). ALSO, CONTRACTOR SHALL COORDINATE WITH OWNER SUPPLIED AND/OR INSTALLED EQUIPMENT. COORDINATION DRAWINGS MUST BE SUBMITTED BEFORE ANY MECHANICAL, PLUMBING, FIRE PROTECTION EQUIPMENT IS INSTALLED, IF NOT, THE MECHANICAL CONTRACTOR WILL BE REQUIRED TO REMOVE/RELOCATE AT THEIR EXPENSE.
31. PROVIDE CABLE OPERATED VOLUME DAMPERS AT ALL LOCATIONS WHERE THE DAMPER IS IN AN INACCESSIBLE LOCATION AND ACCESS DOORS CANNOT BE PROVIDED. THE MECHANICAL CONTRACTOR SHALL COORDINATE THE LOCATION OF THE OPERATORS TO ALLOW FOR CONVENIENT OPERATION.
32. ROOM TEMPERATURE, HUMIDITY & CARBON DIOXIDE SENSORS SHALL BE MOUNTED TO THE WALL IN STRICT ACCORDANCE WITH THE MANUFACTURER'S INSTALLATIONS INSTRUCTIONS. THE SENSORS SHALL BE MOUNTED AT A HEIGHT THAT SATISFIES THE LATEST ANSI 117.1 REQUIREMENTS. COORDINATE SENSOR LOCATIONS W/ LIGHT SWITCHES AND OTHER DEVICES THAT ARE BY OTHER SECTIONS/DIVISIONS. IN AREAS THAT ARE SUBJECT TO PHYSICAL ABUSE (I.E. GYMNASIUM, ETC.), PROVIDE A PROTECTIVE ENCLOSURE THAT WILL NOT AFFECT THE DEVICES PERFORMANCE.
33. WHERE AUTOMATIC TEMPERATURE CONTROLS DEVICES ARE TO BE MOUNTED TO CONCRETE OR MASONRY WALLS, THEY SHALL BE SURFACE MOUNTED. RUN THE WIRING IN METALLIC CONDUIT, CONCEALED IN THE BLOCK WALLS. WHERE CONDUIT RUNS CANNOT BE CONCEALED, SURFACE MOUNT AND PAINT THE CONDUIT TO MATCH THE SURFACE IT IS INSTALLED ON. COORDINATE COLOR WITH ARCHITECTS.
34. PROVIDE A FLEXIBLE DUCT SECTION OR FLEXIBLE PIPING EXPANSION LOOPS, AT ALL LOCATIONS WHERE DUCTWORK AND PIPING CROSS BUILDING EXPANSION/SEISMIC JOINTS. THE MECHANICAL CONTRACTOR SHALL COORDINATE ALL LOCATIONS ON ARCH. DRAWINGS. SUPPORT DUCT AND PIPING ON BOTH SIDES OF THE JOINT. ALLOW FOR A MIN. OF 2" OF MOVEMENT IN ANY DIRECTION.
35. PROVIDE GALV., SCH. 40 PIPE SLEEVES AT ALL WALL AND FLOOR PENETRATIONS. SLEEVES TO BE WATERPROOF AT ALL BELOW GRADE OR SLAB-ON-GRADE PENETRATIONS. REFER TO M500 SERIES DETAILS AND DIV. 23 & 07 SPECIFICATIONS.
36. FIRE SEAL AROUND ALL DUCT AND PIPING PENETRATIONS THROUGH FIRE RATED ASSEMBLIES. COORDINATE WITH ARCH. DWGS. FOR ASSEMBLY TYPES AND LOCATIONS. PROVIDE ALL NECESSARY MATERAILS/COMPONENTS AND INSTALL IN STRICT ACCORDANCE WITH U.L. REQUIREMENTS BASED ON THE ASSEMBLIES COMPOSITION. REFER TO DIV. 23 SPECIFICATIONS AND DIV. 07 SPEC. FOR ADDITIONAL INFORMATION.
37. HANGERS FOR PIPES, DUCTS, CONDUITS, PANELS, TRANSFORMERS, MECHANICAL AND PLUMBING EQUIPMENT, ETC... ARE INTENDED TO BE SUPPORTED BY MISC. GALV. STEEL ANGELS OR CHANNELS OR SIMILAR DEVICES MEETING MSS STANDARDS AND SECURELY ATTACHED TO BUILDING STRUCTURAL STEEL COMPONENTS. IT IS NOT INTENDED FOR HANGERS TO BE PRIMARILY SUPPORTED FROM THE FLOOR SLAB. WHERE UNAVOIDABLE, REFER TO DIV. 05, STEEL DECKING, FOR REQUIREMENTS PERTAINING TO HANGERS SUPPORTED BY THE FLOOR DECK. DO NOT INSTALL ANY HANGERS DIRECTLY TO THE ROOF DECK. ALL ATTACHMENTS TO STEEL BAR JOISTS, TRUSSES, OR JOIST GIRDERS SHALL BE AT PANEL POINTS. ALL CONNECTIONS SHALL BE COORDINATED WITH GENERAL CONTRACTOR. WELDING TO STRUCTURAL MEMBERS SHALL NOT BE PERMITTED.
38. FOR CEILING TYPE DIFFUSERS SHOWN IN AREAS WITHOUT CEILINGS, DO NOT USE FLEXIBLE BRANCH DUCTWORK AT ALL. RIDIGLY MOUNT THE DIFFUSER TO THE BRANCH DUCT WITH AMPLE STRAIGHT RUN AS INDICATED IN THE DETAIL. INSTALL ALL DIFFUSERS, LEVEL, WITH THE FACE PARALLEL TO THE FLOOR AT A HEIGHT THAT WILL ALLOW FOR MAX. HEADROOM. ALL DIFFUSERS WITHIN THE SAME SPACE SHALL BE MOUNTED AT THE SAME ELEVATION. MC TO COORDINATE FINAL DIFFUSER ELEVATION WITH ARCHITECT. TYPICAL.
39. PROVIDE CONDENSATE PUMPS (CPs) AT ALL HVAC EQUIPMENT USED FOR COOLING. MOUNT THE CPs TO THEIR RESPECTIVE EQUIPMENT WHERE FEASIBLE OR IN CLOSE PROXIMITY USING GALV. STEEL CHANNEL SYSTEM SECURED TO THE BUILDING STRUCTURE. THE UNIT'S CONDENSATE DISCHARGE (CD) SHALL BE PITCHED DOWNWARD, AND RUN AS SHORT AS POSSIBLE, WITHOUT ANY OBSTRUCTIONS OR LOW POINTS, TO THE CP INLET.
40. A WEATHERPROOF DUPLEX, 120V., GFCI CONVENIENCE OUTLETS SHALL BE PROVIDED AT ALL EQUIPMENT LOCATED OUTDOORS. WHERE APPLICABLE, THE OUTLETS SHALL BE FACTORY MOUNTED AND WIRED BY THE UNIT'S MANUFACTURER. RECEPTACLE USE SHALL BE INDEPENDENT OF UNIT OPERATION AND SHALL BE ACTIVE, EVEN IF UNIT IS DISABLED. WHERE THIS IS NOT FEASIBLE, COORDINATE WITH DIV. 26. TO PROVIDE A RECEPTACLE WITH A DEDICATED CIRCUIT, MOUNTED TO OR NEAR THE UNIT.

MECHANICAL DRAWING LIST

SHEET NO.	SHEET TITLE
M001	MECHANICAL NOTES, SYMBOL LEGEND, & ABBREVIATIONS
M002	HVAC LOAD CALCULATIONS
M003	HVAC LOAD CALCULATIONS
M004	MECHANICAL VENTILATION CALCULATIONS
M006	MECHANICAL ENERGY COMPLIANCE
M007	MECHANICAL ENERGY COMPLIANCE
M101.1	OVERALL FIRST FLOOR MECHANICAL PLAN
M101.2	OVERALL ROOF MECHANICAL PLAN
M401	MECHANICAL ENLARGED PLANS
M501	MECHANICAL DETAILS
M502	MECHANICAL DETAILS
M503	MECHANICAL DETAILS
M601	MECHANICAL SCHEDULES
M701	MECHANICAL DIAGRAMS
M702	MECHANICAL DIAGRAMS

MECHANICAL ABBREVIATIONS

A	AMPS, AMPERE
A/C	AIR CONDITIONER
ABC	ABOVE COUNTER
ABV	ABOVE
AC	ALTERNATING CURRENT
ADJ	ADJACENT
AFF	ABOVE FINISH FLOOR
AFG	ABOVE FINISH GRADE
AHU	AIR HANDLING UNIT
AMB	AMBIENT
AUX	AUXILIARY, AUXILIARIES
AV	AUDIO VISUAL
BLDG	BUILDING
BMS	BUILDING MANAGEMENT SYSTEM
BTU	BRITISH THERMAL UNIT
BTUH	BRITISH THERMAL UNIT PER HOUR
CAT	CATALOGUE
CD	CONDENSATE DRAIN
CF	CIRCULATION FAN
CFH	CUBID FEET PER HOUR
CFM	CUBIC FEET PER MINUTE
CHWR	CHILLED WATER RETURN
CHWS	CHILLED WATER SUPPLY
CI	CAST IRON
CKT	CIRCUIT
CLG	CEILING
CO	CLEAN OUT, CARBON MONOXIDE
CO2	CARBON DIOXIDE
COL	COLUMN
COMM	COMMUNICATION
CONC	CONCRETE
CONN	CONNECT
CONST	CONSTRUCTION
CONT	CONTINUOUS
COP	COEFFICIENT OF PERFORMANCE
CRAC	COMPUTER ROOM AIR CONDITIONING UNIT
CT	COOLING TOWER
CU	CONDENSING UNIT
CVO	COLD WATER VALVED OPENING
CW	COLD WATER
CWR	CONDENSER WATER RETURN
CWS	CONDENSER WATER SUPPLY
D	DEPTH
DB	DRY BULB
DCV	DEMAND CONTROLLED VENTILATION
DEMARC	TELECOMMUNICATION DEMARCATION BOARD
DIA	DIAMETER
DIFF	DIFFUSER
DN	DOWN
DOAS	DEDICATED OUTSIDE AIR SYSTEM
DTL	DETAIL
DTL	DETAIL
DWG	DRAWING
EA	EACH
EAT	ENTERING AIR TEMPERATURE
EC	ELECTRICAL CONTRACTOR
EDH	ELECTRIC DUCT HEATER
EER	ENERGY EFFICIENCY RATIO
EL	ELEVATION
ELEC	ELECTRICAL
ELEV	ELEVATOR
EMER	EMERGENCY
EQUIP	EQUIPMENT
ER	EXISTING TO BE REMOVED
ERV	ENERGY RECOVERY VENTILATOR
ESP	EXTERNAL STATIC PRESSURE
ETR	EXISTING TO REMAIN
EUH	ELECTRIC UNIT HEATER
EWT	ENTERING WATER TEMPEARTURE
EXH	EXHAUST
EXIST, EXG	EXISTING
EXP	EXPANSION
F	DEGREES FAHRENHEIT
F/A	FROM ABOVE
F/B	FROM BELOW
FA	FREE AREA
FC	FLEXIBLE CONNECTION
FCU	FAN COIL UNIT
FD	FIRE DAMPER
FPB	FAN POWERED VAV TERMINAL UNIT
FPM	FEET PER MINUTE
FT	FEET
G	GROUND
GA	GAUGE
GAL	GALLONS
GALV	GALVANIZED
GC	GENERAL CONTRACTOR
GEN	GENERATOR
GPH	GALLONS PER HOUR
GPM	GALLONS PER MINUTE
H	HEIGHT, HYDROGEN
HD	HEAD
HORIZ	HORIZONTAL
HP	HORSEPOWER
HTG	HEATING
HUM	HUMIDITY
HVAC	HEATING, VENTILATION & AIR CONDITIONING
HVLS	HIGH VOLUME LOW SPEED
HWR	HOT WATER RETURN
HWS	HOT WATER SUPPLY
IDF	INDIVIDUAL DISTRIBUTION FRAME - DATA
IN	INCHES
IN WC	INCHES WATER COLUMN
KVA	KILOVOLT AMPERES
KW	KILOWATT

MECHANICAL ABBREVIATIONS

KWH	KILOWATT - HOUR
L	LENGTH
LAT	LEAVING AIR TEMPERATURE
LAT	LATENT (BTU)
LB	POUNDS (WEIGHT)
LIN FT	LINEAR FOOT
LTG	LIGHTING
LWT	LEAVING WATER TEMPERATURE
mA	MILI AMPS
MAX	MAXIMUM
MBH	THOUSAND BRITISH THERMAL UNIT PER HOUR
MC	MECHANICAL CONTRACTOR
MCB	MAIN CIRCUIT BREAKER
MCC	MOTOR CONTROL CENTER
MDF	MAIN DISTRIBUTION FRAME - DATA
MECH	MECHANICAL
MH	METHANE
MIN	MINIMUM
MISC	MISCELLANEOUS
MTD	MOUNTED
MTG	MOUNTING
MTL	METAL
MTR	MOTOR
MTRZD	MOTORIZED
#	NUMBER
NA	NOT APPLICABLE
NC	NORMALLY CLOSED
NEC	NATIONAL ELECTRICAL CODE
NEMA	NATIONAL ELECTRICAL MANUFACTURERS ASSOCIATION
NFPA	NATIONAL FIRE PROTECTION ASSOCIATION
NIC	NOT IN CONTRACT
NO	NORMALLY OPEN
NO2	NITROGEN DIOXIDE
OA	OUTSIDE AIR
OBD	OPPOSED BLADE DAMPER
OC	ON CENTER
OCC	OCCUPANCY
OD	OUTSIDE DIAMETER
OED	OPEN-ENDED DUCT
OZ	OUNCE
PD	PRESSURE DROP
PE	PHOTO-ELECTRIC
PERF	PERFORATED
PF	POWER FACTOR
PH	PHASE
PLBG	PLUMBING
PSI	POUNDS PER SQUARE INCH
PSIA	POUNDS PER SQUARE INCH - ABSOLUTE
PSIG	POUNDS PER SQUARE INCH - GAUGE
PVC	POLYVINYL CHLORIDE
PWR	POWER
RA	RETURN AIR
RCP	REFLECTED CEILING PLAN
REC	RECEPTACLE
REF	REFERENCE
REFR	REFRIGERATOR
REQ	REQUIRED
RH	RELATIVE HUMIDITY
RLA	RUNNING LOAD AMPS
RM	ROOM
RPM	REVOLUTIONS PER MINUTE
RQ	REQUIREMENT
RT	RAINTIGHT
RTU	ROOFTOP UNIT
SA	SUPPLY AIR
SEER	SEASONAL ENERGY EFFICIENCY RATIO
SEF	SMOKE EXHAUST FAN
SENS	SENSIBLE (BTU)
SHT	SHEET
SHT MTL	SHEET METAL
SP	STATIC PRESSURE
SPECS	SPECIFICATIONS
SPEF	SMOKE PURGE EXHAUST FAN
SPKR	SPEAKER
SQ	SQUARE
SQFT, SF	SQUARE FEET
STD	STANDARD
SURF	SURFACE
SW	SWITCH
SWBD	SWITCHBOARD
SWGR	SWITCHGEAR
SYM	SYMMETRICAL
T-STAT	THERMOSTAT
TC	TIMECLOCK
TELE	TELEPHONE
TOT	TOTAL (BTU)
TYP	TYPICAL
UF	UNDERFLOOR
UON	UNLESS OTHERWISE NOTED
V	VOLT
VA	VALVE
VAC	VACUUM
VAV	VARIABLE AIR VOLUME
VERT	VERTICAL
VT	VENT
VTL	VENTILATION
VV	VARIABLE VOLUME TERMINAL UNIT
W	WATTS
W	WIDTH
WB	WET BULB
WH	WATER HEATER
WMS	WIRE MESH SCREEN
WP	WEATHERPROOF
WT	WEIGHT

MECHANICAL SYMBOL LEGEND

* NOT ALL SYMBOLS MAY APPEAR ON DRAWINGS.

SYMBOL	DESCRIPTION
	90° ELBOW DOWN
	90° ELBOW UP
	ROUND RADIUS ELBOW
	45° ELBOW
	90° ELBOW DOWN
	90° ELBOW UP
	RECTANGULAR RADIUS ELBOW
	RECTANGULAR ELBOW WITH TURNING VANES
	BRANCH TAKE-OFF WITH ANGLED TAP & VOLUME DAMPER
	REDUCER, ECCENTRIC
	REDUCER, CONCENTRIC
	INTERNAL ACOUSTICALLY LINED DUCTWORK
	INSULATED DUCTWORK
	SUPPLY DUCT
	RETURN DUCT
	EXHAUST DUCT
Ø	ROUND DUCT
	FLEXIBLE DUCT CONNECTION
	EXISTING DUCT TO REMAIN
	EXISTING DUCT TO BE REMOVED
	NEW DUCT
	SUPPLY AIR DIFFUSER
	RETURN GRILLE
	EXHAUST GRILLE
	MANUAL VOLUME DAMPER
M	MOTERIZED DAMPER
BD	BACKDRAFT DAMPER
FD	FIRE DAMPER
SD	SMOKE DAMPER
FSD	COMBINATION FIRE-SMOKE DAMPER
NO2 CO	SPACE COMBINATION NITROGEN DIOXIDE AND CARBON MONOXIDE SENSOR
FCP	FAN CONTROL PANEL
TH	COMBINATION TEMPERATURE AND RELATIVE HUMIDITY SENSOR
SD	DUCT SMOKE DETECTOR
CO2	SPACE OR DUCT CARBON DIOXIDE SENSOR
CO	SPACE CARBON MONOXIDE SENSOR
H	SPACE HYDROGEN SENSOR
T	SPACE OR DUCT TEMPERATURE THERMOSTAT
RH	SPACE OR DUCT RELATIVE HUMIDITY SENSOR
NO2	SPACE NITROGEN DIOXIDE SENSOR
OCC	SPACE OCCUPANCY SENSOR
1/2"	UNDERCUT DOOR - NUMBER DENOTES DOOR UNDERCUT
	RETURN / EXHAUST AIRFLOW DIRECTION
	SUPPLY AIRFLOW DIRECTION
	WATER FLOW DIRECTION
	PIPING GUIDE
	PIPING ANCHOR
	DISCONNECTION POINT
	CONNECTION POINT
#	KEYNOTE

Architecture
Engineering
Environmental
Land Surveying
BL Companies

355 Research Parkway
Meriden, CT 06450
(203) 630-1406
(203) 630-2615 Fax

JESSE E. VOSE
STATE OF RHODE ISLAND
No. 14344
HOPE
REGISTERED
PROFESSIONAL ENGINEER
MECHANICAL

PAWTUCKET-CENTRAL FALLS TRANSIT CENTER
300 PINE STREET PAWTUCKET, RI

REVISIONS

NO	DATE	DESCRIPTION

Designed: PMS
Drawn: PMS
Reviewed: JV
Project No.: 2301115
Date: 04/09/2024
Issued for:
CONSTRUCTION DOCUMENTS

Title:
MECHANICAL NOTES, SYMBOL LEGEND, & ABBREVIATIONS

Sheet No.
M001

4/4/2024 1:58:33 PM C:\Users\pmscofield\Documents\2301115_RIPTA_PassengerFacility_R23_MEP_pmscofield4GXCV.rvt

© 2022 BL COMPANIES, INC. THESE DRAWINGS SHALL NOT BE UTILIZED BY ANY PERSON, FIRM OR CORPORATION WITHOUT THE SPECIFIC WRITTEN PERMISSION OF BL COMPANIES.

System Checksums
By BL Companies

RTU-1 — Single Zone Variable Air Volume

	COOLING COIL PEAK				CLG SPACE PEAK		HEATING COIL PEAK			
	Peaked at Time: Mo/Hr: 7 / 15; Outside Air: OADB/WB/HR: 87 / 72 / 93				Mo/Hr: 7 / 10; OADB: 77		Mo/Hr: Heating Design; OADB: 6			
	Space Sens. + Lat. Btu/h	Plenum Sens. + Lat Btu/h	Net Total Btu/h	Percent Of Total (%)	Space Sensible Btu/h	Percent Of Total (%)		Space Peak Space Sens Btu/h	Coil Peak Tot Sens Btu/h	Percent Of Total (%)
Envelope Loads							**Envelope Loads**			
Skylite Solar	0	0	0	0	0	0	Skylite Solar	0	0	0.00
Skylite Cond	0	0	0	0	0	0	Skylite Cond	0	0	0.00
Roof Cond	0	4,208	4,208	5	0	0	Roof Cond	0	-3,946	4.58
Glass Solar	5,199	0	5,199	7	25,151	52	Glass Solar	0	0	0.00
Glass/Door Cond	1,859	0	1,859	2	43	0	Glass/Door Cond	-10,374	-10,374	12.04
Wall Cond	6,208	603	6,811	9	6,667	14	Wall Cond	-6,527	-7,159	8.31
Partition/Door	863		863	1	863	2	Partition/Door	-1,906	-1,906	2.21
Floor	0		0	0	0.00	0	Floor	0	0	0.00
Adjacent Floor	0.00	0.00	0.00	0.00	0.00	0.00	Adjacent Floor	0.00	0.00	0.00
Infiltration	3,722		3,722	5	244	1	Infiltration	-8,924	-8,924	10.36
Sub Total ==>	17,851	4,811	22,662	29	32,968	68	*Sub Total ==>*	-27,732	-32,310	37.50
Internal Loads							**Internal Loads**			
Lights	3,928	2,864	6,792	9	3,928	8	Lights	0	0	0.00
People	19,317	0	19,317	25	10,110	21	People	0	0	0.00
Misc	171	0	171	0	171	0	Misc	0	0	0.00
Sub Total ==>	23,416	2,864	26,280	34	14,209	29	*Sub Total ==>*	0	0	0.00
Ceiling Load	1,478	-1,478	0	0	599	1	**Ceiling Load**	-1,459	0	0.00
Ventilation Load	0	0	20,874	27	0	0	**Ventilation Load**	0	-55,312	64.20
Adj Air Trans Heat	0		0	0	0	0	**Adj Air Trans Heat**	0	0	0
Dehumid. Ov Sizing			0	0			**Ov/Undr Sizing**	5,530	5,530	-6.42
Ov/Undr Sizing	1,168		1,168	2	480	1	**Exhaust Heat**		1,038	-1.21
Exhaust Heat		-1,052	-1,052	-1			**OA Preheat Diff.**		0	0.00
Sup. Fan Heat			7,367	10			**RA Preheat Diff.**		-5,103	5.92
Ret. Fan Heat		0	0	0			**Additional Reheat**		0	0.00
Duct Heat Pkup		0	0	0						
Underflr Sup Ht Pkup			0	0			**Underflr Sup Ht Pkup**		0	0.00
Supply Air Leakage		0	0	0			**Supply Air Leakage**		0	0.00
Grand Total ==>	43,913	5,144	77,298	100.00	48,257	100.00	***Grand Total ==>***	-23,662	-86,156	100.00

TEMPERATURES

	Cooling	Heating
SADB	64.4	83.4
Ra Plenum	77.3	67.7
Return	77.3	67.7
Ret/OA	79.9	37.5
Fn MtrTD	0.2	0.0
Fn BldTD	0.5	0.0
Fn Frict	1.6	0.0

AIRFLOWS

	Cooling	Heating
Diffuser	4,091	1,585
Terminal	4,091	1,585
Main Fan	4,091	1,585
Sec Fan	0	0
Nom Vent	778	778
AHU Vent	778	778
Infil	125	125
MinStop/Rh	1,585	1,585
Return	3,716	1,210
Exhaust	403	403
Rm Exh	500	500
Auxiliary	0	0
Leakage Dwn	0	0
Leakage Ups	0	0

ENGINEERING CKS

	Cooling	Heating
% OA	19.0	49.1
cfm/ft²	2.06	0.80
cfm/ton	635.02	
ft²/ton	308.93	
Btu/hr·ft²	38.84	-61.37
No. People	38	

COOLING COIL SELECTION

	Total Capacity ton	Total Capacity MBh	Sens Cap. MBh	Coil Airflow cfm	Enter DB °F	Enter WB °F	Enter HR gr/lb	Leave DB °F	Leave WB °F	Leave HR gr/lb
Main Clg	6.4	77.3	55.1	2,762	79.9	66.5	76.3	62.0	57.8	64.9
Aux Clg	0.0	0.0	0.0	0	0.0	0.0	0.0	0.0	0.0	0.0
Opt Vent	0.0	0.0	0.0	0	0.0	0.0	0.0	0.0	0.0	0.0
Total	6.4	77.3								

AREAS

	Gross Total	Glass ft²	Glass (%)
Floor	1,990		
Part	445		
Int Door	1		
ExFlr	0		
Roof	1,990	0	0
Wall	2,073	311	15
Ext Door	63	0	0

HEATING COIL SELECTION

	Capacity MBh	Coil Airflow cfm	Ent °F	Lvg °F
Main Htg	-40.0	1,585	60.7	83.4
Aux Htg	0.0	0	0.0	0.0
Preheat	-48.4	778	6.1	62.0
Humidif	-33.7	903	1.5	54.8
Opt Vent	0.0	0	0.0	0.0
Total	-122.1			

ENGINEERING CHECKS
By BL Companies

System	Zone	Room	Type	Floor Area ft²	COOLING % OA	COOLING cfm/ft²	COOLING cfm/ton	COOLING ft²/ton	COOLING Btu/hr·ft²	HEATING % OA	HEATING cfm/ft²	HEATING Btu/hr·ft²
Alternative 1												
		IT 109	Zone	30	0.00	4.44	526.8	118.8	101.03	0.00	4.44	-101.92
AC-1			**System - Computer Room Unit**	**30**	**0.00**	**4.44**	**526.8**	**118.8**	**101.03**	**0.00**	**4.44**	**-101.92**
		JAN 111	Zone	25	0.00	0.00	0.0	0.0	0.00	78.74	0.08	-9.11
		UTILITIES 110	Zone	45	0.00	0.00	0.0	0.0	0.00	46.68	0.13	-12.90
		VEST 101	Zone	90	0.00	0.00	0.0	0.0	0.00	11.38	0.53	-44.36
HEATING ONLY			**System - Unit Heaters**	**160**	**0.00**	**0.00**	**0.0**	**0.0**	**0.00**	**17.41**	**0.34**	**-30.00**
		DRIVER BREAK/CS 106	Zone	395	33.91	1.21	242.7	201.0	59.71	100.00	0.41	-53.12
		MENS REST 112	Zone	205	100.00	0.98	284.6	291.7	41.14	100.00	0.98	-117.61
		POLICE SUB STATION 105	Zone	100	5.93	1.43	571.0	398.1	30.14	19.75	0.43	-23.03
		TLT 107	Zone	50	100.00	1.00	220.0	220.0	54.55	100.00	1.00	-119.81
		TLT 108	Zone	50	57.65	1.73	324.4	187.0	64.17	100.00	1.00	-125.88
		WAITING 100	Zone	975	3.66	3.01	760.1	252.7	47.49	12.19	0.90	-36.99
		WOMENS REST 113	Zone	215	100.00	0.93	271.1	291.4	41.18	100.00	0.93	-113.20
RTU-1			**System - Single Zone Variable Air Volume**	**1,990**	**19.01**	**2.06**	**635.0**	**308.9**	**38.84**	**49.06**	**0.80**	**-61.37**

PROJECT INFORMATION

Location		
Building owner		
Program user		
Company		
Comments		
By	BL Companies	
Dataset name	C:\Users\pmscofield\OneDrive - BL Companies, Inc\Documents\TRACE 700 Projects\2301115 RIPTA.trc	
Calculation time	04:43 PM on 02/05/2024	
TRACE® 700 version	6.3.5	
Location	Providence, Rhode Island	
Latitude	41.0	deg
Longitude	71.0	deg
Time Zone	5	
Elevation	55	ft
Barometric pressure	29.9	in. Hg
Air density	0.0759	lb/cu ft
Air specific heat	0.2444	Btu/lb·°F
Density-specific heat product	1.1132	Btu/h·cfm·°F
Latent heat factor	4,900.3	Btu·min/h·cu ft
Enthalpy factor	4.5542	lb·min/hr·cu ft
Summer design dry bulb	86.5	°F
Summer design wet bulb	71.6	°F
Winter design dry bulb	6.1	°F
Summer clearness number	1.00	
Winter clearness number	1.00	
Summer ground reflectance	0.20	
Winter ground reflectance	0.20	
Carbon Dioxide Level	400	ppm
Design simulation period	January - December	
Cooling load methodology	TETD-TA1	
Heating load methodology	UATD	

TRANE

TRACE 700

System Component Selection Summary
By BL Companies

Alternative 1

System Description: AC-1
System Type: Computer Room Unit
Number of Zones: 1
Number of Rooms: 1

Component	Sizing Method	Location	Quantity
Cooling			
Main Clg Coil	Peak	Room	1
Primary Clg Fan	Peak	Room	1
Heating			
Main Htg Coil	Peak	Room	1
Preheat Coil	Peak	Room	1
Humidification Coil	Peak	Room	1
Miscellaneous			
System Exhaust Fan	Vent+Inf-RmExh	System	1
Return Fan	Return Airflow	System	1

System	Zone	Room	Component	Time Of Peak Mo/Hr	Total Capacity ton	Total Capacity MBh	Sensible Capacity MBh	Airflow At Coil Peak cfm	Enter DB °F	Enter WB °F	Enter HR gr/lb	Leave DB °F	Leave WB °F	Leave HR gr/lb
		IT 109	Main Clg Coil	7/15	0.3	3.0	3.0	133	75.0	62.6	65.0	54.7	54.7	64.0

System	Zone	Room	Component	Total Capacity MBh	Airflow cfm	Entering Dry Bulb °F	Leaving Dry Bulb °F
		IT 109	Humidification Coil	-0.1	1		
		IT 109	Main Htg Coil	-3.0	133	54.7	75.0

System	Zone	Room	Component	Design Airflow cfm	Design Airflow Ach/hr	Outside Air %	SADB Clg °F	SADB Htg °F	Clg VAV Minimum cfm	Htg VAV Maximum cfm
AC-1			System Exhaust Fan	1						
AC-1			Return Fan	135						
		IT 109	Diffuser	133	26.8	0.0	55.0	75.0		
		IT 109	Primary Fan	133	26.8	0.0	55.0			

System Description: HEATING ONLY
System Type: Unit Heaters
Number of Zones: 3
Number of Rooms: 3

System Checksums
By BL Companies

AC-1 — Computer Room Unit

	COOLING COIL PEAK				CLG SPACE PEAK		HEATING COIL PEAK			
	Peaked at Time: Mo/Hr: 7 / 15; Outside Air: OADB/WB/HR: 87 / 72 / 93				Mo/Hr: Sum of; OADB: Peaks		Mo/Hr: Heating Design; OADB: 6			
	Space Sens. + Lat. Btu/h	Plenum Sens. + Lat Btu/h	Net Total Btu/h	Percent Of Total (%)	Space Sensible Btu/h	Percent Of Total (%)		Space Peak Space Sens Btu/h	Coil Peak Tot Sens Btu/h	Percent Of Total (%)
Envelope Loads							**Envelope Loads**			
Skylite Solar	0	0	0	0	0	0	Skylite Solar	0	0	0.00
Skylite Cond	0	0	0	0	0	0	Skylite Cond	0	0	0.00
Roof Cond	0	54	54	2	0	0	Roof Cond	0	-56	1.95
Glass Solar	0	0	0	0	0	0	Glass Solar	0	0	0.00
Glass/Door Cond	0	0	0	0	0	0	Glass/Door Cond	0	0	0.00
Wall Cond	0	0	0	0	0	0	Wall Cond	0	0	0.00
Partition/Door	228		228	8	228	8	Partition/Door	-456	-456	15.83
Floor	0		0	0	0.00	0	Floor	0	0	0.00
Adjacent Floor	0.00	0.00	0.00	0.00	0.00	0.00	Adjacent Floor	0.00	0.00	0.00
Infiltration	48		48	2	19	1	Infiltration	-106	-106	3.68
Sub Total ==>	276	54	329	11	247	8	*Sub Total ==>*	-562	-618	21.46
Internal Loads							**Internal Loads**			
Lights	51	51	102	3	51	2	Lights	0	0	0.00
People	0	0	0	0	0	0	People	0	0	0.00
Misc	2,560	0	2,560	84	2,560	86	Misc	0	0	0.00
Sub Total ==>	2,611	51	2,662	88	2,611	88	*Sub Total ==>*	0	0	0.00
Ceiling Load	105	-105	0	0	105	4	**Ceiling Load**	-56	0	0.00
Ventilation Load	0	0	0	0	0	0	**Ventilation Load**	0	0	0.00
Adj Air Trans Heat	0		0	0	0	0	**Adj Air Trans Heat**	0	0	0
Dehumid. Ov Sizing			0	0			**Ov/Undr Sizing**	0	0	0.00
Ov/Undr Sizing	0		0	0	0	0	**Exhaust Heat**		0	0.00
Exhaust Heat		0	0	0			**OA Preheat Diff.**		0	0.00
Sup. Fan Heat			39	1			**RA Preheat Diff.**		0	0.00
Ret. Fan Heat		0	0	0			**Additional Reheat**		-2,261	78.54
Duct Heat Pkup		0	0	0						
Underflr Sup Ht Pkup			0	0			**Underflr Sup Ht Pkup**		0	0.00
Supply Air Leakage		0	0	0			**Supply Air Leakage**		0	0.00
Grand Total ==>	2,992	0	3,031	100.00	2,963	100.00	***Grand Total ==>***	-618	-2,879	100.00

TEMPERATURES

	Cooling	Heating
SADB	55.0	75.0
Ra Plenum	86.0	64.1
Return	75.0	70.0
Ret/OA	75.0	70.0
Fn MtrTD	0.0	0.0
Fn BldTD	0.1	0.0
Fn Frict	0.2	0.0

AIRFLOWS

	Cooling	Heating
Diffuser	133	133
Terminal	133	133
Main Fan	133	133
Sec Fan	0	0
Nom Vent	0	0
AHU Vent	0	0
Infil	1	1
MinStop/Rh	133	133
Return	135	135
Exhaust	1	1
Rm Exh	0	0
Auxiliary	0	0
Leakage Dwn	0	0
Leakage Ups	0	0

ENGINEERING CKS

	Cooling	Heating
% OA	0.0	0.0
cfm/ft²	4.44	4.44
cfm/ton	526.84	
ft²/ton	118.77	
Btu/hr·ft²	101.03	-101.92
No. People	0	

COOLING COIL SELECTION

	Total Capacity ton	Total Capacity MBh	Sens Cap. MBh	Coil Airflow cfm	Enter DB °F	Enter WB °F	Enter HR gr/lb	Leave DB °F	Leave WB °F	Leave HR gr/lb
Main Clg	0.3	3.0	3.0	133	75.0	62.6	65.0	54.7	54.7	64.0
Aux Clg	0.0	0.0	0.0	0	0.0	0.0	0.0	0.0	0.0	0.0
Opt Vent	0.0	0.0	0.0	0	0.0	0.0	0.0	0.0	0.0	0.0
Total	0.3	3.0								

AREAS

	Gross Total	Glass ft²	Glass (%)
Floor	30		
Part	118		
Int Door	1		
ExFlr	0		
Roof	30	0	0
Wall	0	0	0
Ext Door	0	0	0

HEATING COIL SELECTION

	Capacity MBh	Coil Airflow cfm	Ent °F	Lvg °F
Main Htg	-3.0	133	54.7	75.0
Aux Htg	0.0	0	0.0	0.0
Preheat	0.0	0	0.0	0.0
Reheat	-3.0	133	54.7	75.0
Humidif	-0.1	1	1.5	54.8
Opt Vent	0.0	0	0.0	0.0
Total	-3.1			

SYSTEM SUMMARY
DESIGN COOLING CAPACITIES
By BL Companies

Alternative 1

Building Airside Systems and Plant Capacities

Plant	System	Peak: Main Coil ton	Peak: Aux Coil ton	Peak: Opt Vent Coil ton	Peak: Misc Load ton	Peak: Stg 1 Desic Cond ton	Peak: Stg 2 Desic Cond ton	Peak: Base Utility ton	Peak Total ton	Block: Time Of Peak mo/hr	Block: Main Coil ton	Block: Aux Coil ton	Block: Opt Vent Coil ton	Block: Misc Load ton	Block: Stg 1 Desic Cond ton	Block: Stg 2 Desic Cond ton	Block: Base Utility ton	Block Total ton
Unassigned Cooling Loads		6.7	0.0	0.0	0.0	0.0	0.0	0.0	6.7	7/15	6.4	0.0	0.0	0.0	0.0	0.0	0.0	6.4
	RTU-1	6.4	0.0	0.0	0.0	0.0	0.0	0.0	6.4	7/15	6.1	0.0	0.0	0.0	0.0	0.0	0.0	6.1
	AC-1	0.3	0.0	0.0	0.0	0.0	0.0	0.0	0.3	7/15	0.3	0.0	0.0	0.0	0.0	0.0	0.0	0.3
Building totals		6.7	0.0	0.0	0.0	0.0	0.0	0.0	6.7		6.4	0.0	0.0	0.0	0.0	0.0	0.0	6.4

Building peak load is 6.7 tons.

Building maximum block load of 6.4 tons occurs in July at hour 15 based on system simulation.

System Component Selection Summary
By BL Companies

Component	Sizing Method	Location	Quantity
Heating			
Main Htg Coil	Peak	Room	3
Secondary Fan	Peak	Room	3
Miscellaneous			
System Exhaust Fan	Vent+Inf-RmExh	System	1

System	Zone	Room	Component	Time Of Peak Mo/Hr	Total Capacity ton	Total Capacity MBh	Sensible Capacity MBh	Airflow At Coil Peak cfm	Enter DB °F	Enter WB °F	Enter HR gr/lb	Leave DB °F	Leave WB °F	Leave HR gr/lb
		JAN 111	Main Clg Coil	0/0	0.0	0.0	0.0	0	0.0	0.0	0.0	0.0	0.0	0.0
		UTILITIES 110	Main Clg Coil	0/0	0.0	0.0	0.0	0	0.0	0.0	0.0	0.0	0.0	0.0
		VEST 101	Main Clg Coil	0/0	0.0	0.0	0.0	0	0.0	0.0	0.0	0.0	0.0	0.0

System	Zone	Room	Component	Total Capacity MBh	Airflow cfm	Entering Dry Bulb °F	Leaving Dry Bulb °F
		JAN 111	Main Htg Coil	-0.2	2	17.6	125.0
		UTILITIES 110	Main Htg Coil	-0.6	6	34.8	125.0
		VEST 101	Main Htg Coil	-4.0	47	49.4	125.0

System	Zone	Room	Component	Design Airflow Ach/hr	Outside Air %	SADB Clg	SADB Htg	Clg VAV Minimum	Htg VAV Maximum

System Description: RTU-1
System Type: Single Zone Variable Air Volume
Number of Zones: 7
Number of Rooms: 7

Component	Sizing Method	Location	Quantity	
Cooling				
Main Clg Coil	Block	Zone	7	
Primary Clg Fan	Block	Zone	7	
Heating				
Main Htg Coil	Peak	Zone	7	
Humidification Coil	Peak	Zone	7	
Miscellaneous				
System Exhaust Fan	Vent+Inf-RmExh	System	1	
Return Fan	Return Airflow	System	1	
Room Exhaust Fan	RmExh Input	Room	4	Sizing not to exceed room ventilation plus infiltration airflow

System Checksums
By BL Companies

HEATING ONLY — Unit Heaters

	COOLING COIL PEAK				CLG SPACE PEAK		HEATING COIL PEAK			
	Peaked at Time: Mo/Hr: 0 / 0; Outside Air: OADB/WB/HR: 0 / 0 / 0				Mo/Hr: 0 / 0; OADB: 0		Mo/Hr: Heating Design; OADB: 6			
	Space Sens. + Lat. Btu/h	Plenum Sens. + Lat Btu/h	Net Total Btu/h	Percent Of Total (%)	Space Sensible Btu/h	Percent Of Total (%)		Space Peak Space Sens Btu/h	Coil Peak Tot Sens Btu/h	Percent Of Total (%)
Envelope Loads							**Envelope Loads**			
Skylite Solar	0	0	0	0	0	0	Skylite Solar	0	0	0.00
Skylite Cond	0	0	0	0	0	0	Skylite Cond	0	0	0.00
Roof Cond	0	0	0	0	0	0	Roof Cond	0	-236	4.92
Glass Solar	0	0	0	0	0	0	Glass Solar	0	0	0.00
Glass/Door Cond	0	0	0	0	0	0	Glass/Door Cond	-3,370	-3,370	70.20
Wall Cond	0	0	0	0	0	0	Wall Cond	-171	-197	4.11
Partition/Door	0		0	0	0	0	Partition/Door	0	0	0.00
Floor	0		0	0	0.00	0	Floor	0	0	0.00
Adjacent Floor	0.00	0.00	0.00	0.00	0.00	0.00	Adjacent Floor	0.00	0.00	0.00
Infiltration	0		0	0	0	0	Infiltration	-451	-451	9.39
Sub Total ==>	0	0	0	0	0	0	*Sub Total ==>*	-3,991	-4,255	88.63
Internal Loads							**Internal Loads**			
Lights	0	0	0	0	0	0	Lights	0	0	0.00
People	0	0	0	0	0	0	People	0	0	0.00
Misc	0	0	0	0	0	0	Misc	0	0	0.00
Sub Total ==>	0	0	0	0	0	0	*Sub Total ==>*	0	0	0.00
Ceiling Load	0	0	0	0	0	0	**Ceiling Load**	-263	0	0.00
Ventilation Load	0	0	0	0	0	0	**Ventilation Load**	0	-546	11.37
Adj Air Trans Heat	0		0	0	0	0	**Adj Air Trans Heat**	0	0	0
Dehumid. Ov Sizing			0	0			**Ov/Undr Sizing**	0	0	0.00
Ov/Undr Sizing	0		0	0	0	0	**Exhaust Heat**		0	0.00
Exhaust Heat		0	0	0			**OA Preheat Diff.**		0	0.00
Sup. Fan Heat			0	0			**RA Preheat Diff.**		0	0.00
Ret. Fan Heat		0	0	0			**Additional Reheat**		0	0.00
Duct Heat Pkup		0	0	0						
Underflr Sup Ht Pkup			0	0			**Underflr Sup Ht Pkup**		0	0.00
Supply Air Leakage		0	0	0			**Supply Air Leakage**		0	0.00
Grand Total ==>	0	0	0	100.00	0	100.00	***Grand Total ==>***	-4,255	-4,801	100.00

TEMPERATURES

	Cooling	Heating
SADB	0.0	125.0
Ra Plenum	0.0	52.0
Return	0.0	55.9
Ret/OA	0.0	46.8
Fn MtrTD	0.0	0.0
Fn BldTD	0.0	0.0
Fn Frict	0.0	0.1

AIRFLOWS

	Cooling	Heating
Diffuser	0	55
Terminal	0	55
Main Fan	0	55
Sec Fan	0	0
Nom Vent	0	10
AHU Vent	0	10
Infil	0	8
MinStop/Rh	0	0
Return	0	63
Exhaust	0	18
Rm Exh	0	0
Auxiliary	0	0
Leakage Dwn	0	0
Leakage Ups	0	0

ENGINEERING CKS

	Cooling	Heating
% OA	0.0	17.4
cfm/ft²	0.00	0.34
cfm/ton	0.00	
ft²/ton	0.00	
Btu/hr·ft²	0.00	-30.00
No. People	0	

COOLING COIL SELECTION

	Total Capacity ton	Total Capacity MBh	Sens Cap. MBh	Coil Airflow cfm	Enter DB °F	Enter WB °F	Enter HR gr/lb	Leave DB °F	Leave WB °F	Leave HR gr/lb
Main Clg	0.0	0.0	0.0	0	0.0	0.0	0.0	0.0	0.0	0.0
Aux Clg	0.0	0.0	0.0	0	0.0	0.0	0.0	0.0	0.0	0.0
Opt Vent	0.0	0.0	0.0	0	0.0	0.0	0.0	0.0	0.0	0.0
Total	0.0	0.0								

AREAS

	Gross Total	Glass ft²	Glass (%)
Floor	160		
Part	0		
Int Door	1		
ExFlr	0		
Roof	160	0	0
Wall	223	164	74
Ext Door	0	0	0

HEATING COIL SELECTION

	Capacity MBh	Coil Airflow cfm	Ent °F	Lvg °F
Main Htg	-4.8	55	46.8	125.0
Aux Htg	0.0	0	0.0	0.0
Preheat	0.0	0	0.0	0.0
Humidif	0.0	0	0.0	0.0
Opt Vent	0.0	0	0.0	0.0
Total	-4.8			

SYSTEM SUMMARY
DESIGN HEATING CAPACITIES
By BL Companies

Alternative 1

System Coil Capacities

System Description	System Type	Main System Btu/h	Aux System Btu/h	Preheat Btu/h	Reheat Btu/h	Humid. Btu/h	Optional Vent Btu/h	Stg 1 Desic Regen Btu/h	Stg 2 Desic Regen Btu/h	Stg 1 Frost Prevention Btu/h	Stg 2 Frost Prevention Btu/h	Heating Totals Btu/h
RTU-1	Single Zone Variable Air Volume	-40,034	0	0	0	-33,693	0	0	0	0	0	-122,119
AC-1	Computer Room Unit	-3,002	0	0	-3,002	-56	0	0	0	0	0	-3,058
HEATING ONLY	Unit Heaters	-4,801	0	0	0	0	0	0	0	0	0	-4,801
Totals		**-47,837**	**0**	**0**	**-3,002**	**-33,748**	**0**	**0**	**0**	**0**	**0**	**-129,978**

Building Plant Capacities

Plant	System	Main Coil MBh	Preheat Coil MBh	Reheat Coil MBh	Humid. Coil MBh	Aux Coil MBh	Opt Vent Coil MBh	Misc Load MBh	Stg 1 Desic. Regen. MBh	Stg 2 Desic. Regen. MBh	Stg 1 Frost Prev. MBh	Stg 2 Frost Prev. MBh	Base Utility MBh	Absorption Load MBh
Unassigned Heating Loads		48	48	0	34	0	0	0	0	0	0	0	0	0
	RTU-1	40	48	0	34	0	0	0	0	0	0	0	0	0
	AC-1	3	0	0	0	0	0	0	0	0	0	0	0	0
	HEATING ONLY	5	0	0	0	0	0	0	0	0	0	0	0	0

Building peak load is 130.0 MBh.

Architecture
Engineering
Environmental
Land Surveying
BL Companies
355 Research Parkway
Meriden, CT 06450
(203) 630-1406
(203) 630-2615 Fax

JESSE E. VOSE
No. 14344
REGISTERED
PROFESSIONAL ENGINEER
MECHANICAL

PAWTUCKET-CENTRAL FALLS TRANSIT CENTER
300 PINE STREET PAWTUCKET, RI

REVISIONS

NO	DATE	DESCRIPTION

Designed:	PMS
Drawn:	PMS
Reviewed:	JV
Project No.:	2301115
Date:	04/09/2024

Issued for:
CONSTRUCTION DOCUMENTS

Title:
HVAC LOAD CALCULATIONS

Sheet No.
M002

4/4/2024 1:58:34 PM C:\Users\pmscofield\Documents\2301115_RIPTA_PassengerFacility_R23_MEP_pmscofield4GXCV.rvt

© 2022 BL COMPANIES, INC. THESE DRAWINGS SHALL NOT BE UTILIZED BY ANY PERSON, FIRM OR CORPORATION WITHOUT THE SPECIFIC WRITTEN PERMISSION OF BL COMPANIES.

System Component Selection Summary

By BL Companies

Coil Location			Cooling Coil Selection											
System	Zone	Room	Component	Time Of Peak Mo/Hr	Total Capacity ton	Total Capacity MBh	Sensible Capacity MBh	Airflow At Coil Peak cfm	Enter DB/ WB/ HR °F	°F	gr/lb	Leave DB/ WB/ HR °F	°F	gr/lb
	DRIVER BREAK/CS 106		Main Clg Coil	7/16	2.0	23.6	14.4	461	80.4	68.0	83.1	52.6	51.4	54.6
	MENS REST 112		Main Clg Coil	7/15	0.7	8.4	5.8	200	86.5	71.6	92.8	62.5	59.5	71.2
	POLICE SUB STATION 105		Main Clg Coil	8/17	0.3	3.0	2.7	143	77.6	63.7	66.3	60.0	56.8	64.1
	TLT 107		Main Clg Coil	7/16	0.2	2.7	1.8	50	86.0	71.2	91.3	58.4	54.6	57.8
	TLT 108		Main Clg Coil	7/17	0.3	3.2	2.4	82	81.9	67.6	78.9	58.1	55.3	61.1
	WAITING 100		Main Clg Coil	7/10	3.9	46.3	44.5	2,888	76.0	62.9	65.1	61.8	57.7	64.7
	WOMENS REST 113		Main Clg Coil	7/15	0.7	8.9	6.1	200	86.5	71.6	92.8	62.0	58.8	69.1

Coil Location			Heating Coil Selection			
System	Zone	Room	Component	Total Capacity MBh	Airflow cfm	Entering Dry Bulb °F	Leaving Dry Bulb °F
	DRIVER BREAK/CS 106		Humidification Coil	-6.8	181		
	DRIVER BREAK/CS 106		Main Htg Coil	-5.6	162	52.6	85.0
	MENS REST 112		Humidification Coil	-7.8	210		
	MENS REST 112		Main Htg Coil	-3.7	200	62.5	79.2
	POLICE SUB STATION 105		Humidification Coil	-0.6	16		
	POLICE SUB STATION 105		Main Htg Coil	-1.2	43	60.0	85.0
	TLT 107		Humidification Coil	-2.0	52		
	TLT 107		Main Htg Coil	-1.1	50	58.4	78.6
	TLT 108		Humidification Coil	-2.0	52		
	TLT 108		Main Htg Coil	-1.4	50	58.1	84.0
	WAITING 100		Humidification Coil	-6.7	180		
	WAITING 100		Main Htg Coil	-22.7	880	61.8	85.0
	WOMENS REST 113		Humidification Coil	-7.9	211		
	WOMENS REST 113		Main Htg Coil	-4.0	200	62.0	80.1

Component Location			Miscellaneous Component Selection							
System	Zone	Room	Component	Design Airflow cfm	Outside Air Ach/hr	Outside Air %	SADB Clg °F	SADB Htg °F	Clg VAV Minimum cfm	Htg VAV Maximum cfm
RTU-1			Optional Vent Fan	778		100				
RTU-1			System Exhaust Fan	903						
RTU-1			Return Fan	4,216						
	DRIVER BREAK/CS 106		VAV Box	477		33.9	55.0	85.0	162	162
	DRIVER BREAK/CS 106		Primary Fan	477		33.9	55.0		162	162
		DRIVER BREAK/CS 106	Diffuser	477	7.3	33.9	55.0	85.0	162	162
	MENS REST 112		VAV Box	200		100	65.0	79.0	200	200
	MENS REST 112		Primary Fan	200		100	65.0		200	200
		MENS REST 112	Room Exhaust Fan	200						
		MENS REST 112	Diffuser	200	5.9	100	65.0	79.0	200	200
	POLICE SUB STATION 105		VAV Box	143		5.9	62.0	85.0	43	43
	POLICE SUB STATION 105		Primary Fan	143		5.9	62.0		43	43

Project Name:
Dataset Name: 2301115 RIPTA.trc

TRACE® 700 v6.3.5 calculated at 04:43 PM on 02/05/2024
Alternative - 1 System Component Selection Summary Page 3 of 4

System Component Selection Summary

By BL Companies

Component Location			Miscellaneous Component Selection							
System	Zone	Room	Component	Design Airflow cfm	Outside Air Ach/hr	Outside Air %	SADB Clg °F	SADB Htg °F	Clg VAV Minimum cfm	Htg VAV Maximum cfm
		POLICE SUB STATION 105	Diffuser	143	5.7	5.9	62.0	85.0	43	43
	TLT 107		Primary Fan	50		100	61.0		50	50
	TLT 107		VAV Box	50		100	61.0	79.0	50	50
		TLT 107	Diffuser	50	6.1	100	61.0	79.0	50	50
		TLT 107	Room Exhaust Fan	50						
	TLT 108		VAV Box	87		57.7	60.0	84.0	50	50
	TLT 108		Primary Fan	87		57.7	60.0		50	50
		TLT 108	Room Exhaust Fan	50						
		TLT 108	Diffuser	87	10.5	57.7	60.0	84.0	50	50
	WAITING 100		VAV Box	2,933		3.7	64.0	85.0	880	880
	WAITING 100		Primary Fan	2,933		3.7	64.0		880	880
		WAITING 100	Diffuser	2,933	12.0	3.7	64.0	85.0	880	880
	WOMENS REST 113		Primary Fan	200		100	64.0		200	200
	WOMENS REST 113		VAV Box	200		100	64.0	80.0	200	200
		WOMENS REST 113	Diffuser	200	5.6	100	64.0	80.0	200	200
		WOMENS REST 113	Room Exhaust Fan	200						

Project Name:
Dataset Name: 2301115 RIPTA.trc

TRACE® 700 v6.3.5 calculated at 04:43 PM on 02/05/2024
Alternative - 1 System Component Selection Summary Page 4 of 4

Load / Airflow Summary

By BL Companies

System	Zone	Room **		Floor Area ft²	People #	Coil Cooling Sensible Btu/h	Coil Cooling Total Btu/h	Space Design Max SA cfm	Air Changes ach/hr	VAV Minimum SA cfm	VAV Minimum %	Main Coil Heating Sensible Btu/h	Heating Fan Max SA cfm	Percent OA Clg	Percent OA Htg
Alternative 1															
	IT 109		Rm Peak	30	0.0	3,002	3,031	133	26.84	133	100	-3,002	0	0.0	0.0
AC-1			**Sys Peak**	**30**	**0.0**	**3,002**	**3,031**	**133**				**-3,002**	**0**	**0.0**	**0.0**
AC-1			**Sys Block**	**30**	**0.0**	**3,002**	**3,031**	**133**				**-3,002**	**0**	**0.0**	**0.0**
	DRIVER BREAK/CS 106		Rm Peak	395	27.6	14,387	23,587	477	7.31	162	34	-5,835	0	33.9	100.0
	MENS REST 112		Rm Peak	205	0.0	5,822	8,433	200	5.90	200	100	-3,703	0	100.0	100.0
	POLICE SUB STATION 105		Rm Peak	100	0.5	2,685	3,014	143	5.74	43	30	-1,198	0	5.9	19.8
	TLT 107		Rm Peak	50	0.0	1,800	2,728	50	6.05	50	100	-1,122	0	100.0	100.0
	TLT 108		Rm Peak	50	0.0	2,375	3,209	87	10.50	50	58	-1,443	0	57.6	100.0
	WAITING 100		Rm Peak	975	9.8	44,514	46,305	2,933	12.03	880	30	-22,703	0	3.7	12.2
	WOMENS REST 113		Rm Peak	215	0.0	6,050	8,853	200	5.63	200	100	-4,039	0	100.0	100.0
RTU-1			**Sys Peak**	**1,990**	**37.9**	**81,437**	**99,933**	**4,091**				**-40,034**	**0**	**19.0**	**49.1**
RTU-1			**Sys Block**	**1,990**	**37.9**	**55,055**	**77,298**	**4,091**				**-37,763**	**0**	**19.0**	**49.1**

*** This report does not display heating only systems.**

Project Name:
Dataset Name: 2301115 RIPTA.trc

TRACE® 700 v6.3.5 calculated at 04:43 PM on 02/05/2024
Load/Airflow Summary Report Page 1 of 1

Architecture
Engineering
Environmental
Land Surveying
BL Companies

355 Research Parkway
Meriden, CT 06450
(203) 630-1406
(203) 630-2615 Fax

JESSE E. VOSE
No. 15,000
REGISTERED
PROFESSIONAL ENGINEER
MECHANICAL

PAWTUCKET-CENTRAL FALLS TRANSIT CENTER
300 PINE STREET PAWTUCKET, RI

REVISIONS

NO	DATE	DESCRIPTION

Designed: PMS
Drawn: PMS
Reviewed: JV
Project No.: 2301115
Date: 04/09/2024
Issued for:
CONSTRUCTION DOCUMENTS

Title:
HVAC LOAD CALCULATIONS

Sheet No.
M003

4/4/2024 1:58:34 PM C:\Users\pmscofield\Documents\2301115_RIPTA_PassengerFacility_R23_MEP_pmscofield4GXCV.rvt

© 2022 BL COMPANIES, INC. THESE DRAWINGS SHALL NOT BE UTILIZED BY ANY PERSON, FIRM OR CORPORATION WITHOUT THE SPECIFIC WRITTEN PERMISSION OF BL COMPANIES.

ASHRAE Standard 62.1-2004-2010

By BL Companies

System Ventilation Requirements

AHU Location	Description		∑ Vpz cfm	Ps People	∑ Pz People	D Ps / ∑ Pz	Vou cfm	Vps cfm	Xs	Ev	Vot cfm	%OA Vot / Vps
Alternative 1												
Zone*	WAITING 100	Cooling	2,933	10	10	1.00	107	2,933	0.037	1.000	107	3.7
		Heating	880	10	10	1.00	107	880	0.122	1.000	107	12.2
Zone*	POLICE SUB STATION 105	Cooling	143	1	1	1.00	9	143	0.059	1.000	9	5.9
		Heating	43	1	1	1.00	9	43	0.198	1.000	9	19.8
Zone*	TLT 107	Cooling	50	0	0	1.00	50	50	1.000	1.000	50	100.0
		Heating	50	0	0	1.00	50	50	1.000	1.000	50	100.0
Zone*	TLT 108	Cooling	87	0	0	1.00	50	87	0.576	1.000	50	57.6
		Heating	50	0	0	1.00	50	50	1.000	1.000	50	100.0
Zone*	DRIVER BREAK/CS 106	Cooling	477	28	28	1.00	162	477	0.339	1.000	162	33.9
		Heating	162	28	28	1.00	162	162	1.000	1.000	162	100.0
Zone*	MENS REST 112	Cooling	200	0	0	1.00	200	200	1.000	1.000	200	100.0
		Heating	200	0	0	1.00	200	200	1.000	1.000	200	100.0
Zone*	WOMENS REST 113	Cooling	200	0	0	1.00	200	200	1.000	1.000	200	100.0
		Heating	200	0	0	1.00	200	200	1.000	1.000	200	100.0
Room	AC-1	Cooling	0	0	0	0.00	0	0	0.000	0.000	0	0.0
		Heating	0	0	0	0.00	0	0	0.000	0.000	0	0.0
Room	HEATING ONLY	Cooling	0	0	0	0.00	0	0	0.000	0.000	0	0.0
		Heating	0	0	0	0.00	0	0	0.000	0.000	0	0.0

* Apply Single Zone Ventilation Calculation

Project Name:
Dataset Name: 2301115 RIPTA.trc

TRACE® 700 v6.3.5 calculated at 04:43 PM on 02/05/2024
Alternative - 1 ASHRAE Standard 62.1-2004/2007 Report Page 1 of 3

ASHRAE Standard 62.1-2004-2010

By BL Companies

Ventilation Parameters

System Zone Room	Occupancy Category	Rp cfm / p	Pz People	Ra cfm/ft²	Az ft²	Vbz cfm	Std 170 Min OA ach	Cooling Ez	Cooling Voz cfm	Heating Ez	Heating Voz cfm
Alternative 1											
WAITING 100	Main entry lobbies	5.00	9.75	0.06	975	107		1.00	107	1.00	107
POLICE SUB STATION 105	Office space	5.00	0.50	0.06	100	9		1.00	9	1.00	9
TLT 107	Rest Room	0.00	0.00	50.00	50	50		1.00	50	1.00	50
TLT 108	Rest Room	0.00	0.00	50.00	50	50		1.00	50	1.00	50
DRIVER BREAK/CS 106	Break Rooms	5.00	27.62	0.06	395	162		1.00	162	1.00	162
MENS REST 112	Rest Room	0.00	0.00	200.00	205	200		1.00	200	1.00	200
WOMENS REST 113	Rest Room	0.00	0.00	200.00	215	200		1.00	200	1.00	200
RTU-1		5.00	37.87	0.30	1,990	778			778		778

Ventilation Calculations for Cooling Design

System Zone Room	Box Type	Vpz cfm	Vtan cfm	Vdz cfm	Vpz-min cfm	Voz-clg cfm	Zd	Ep	Er	Fa	Fb	Fc	Evz
Alternative 1													
WAITING 100	None	2,933	2,933	2,933	880	107	0.122	1.00	0.00	1.00	1.00	1.00	1.000
POLICE SUB STATION 105	None	143	143	143	43	9	0.198	1.00	0.00	1.00	1.00	1.00	0.952
TLT 107	None	50	50	50	50	50	1.000	1.00	0.00	1.00	1.00	1.00	1.000
TLT 108	None	87	87	87	50	50	1.000	1.00	0.00	1.00	1.00	1.00	0.576
DRIVER BREAK/CS 106	None	477	477	477	162	162	1.000	1.00	0.00	1.00	1.00	1.00	0.339
MENS REST 112	None	200	200	200	200	200	1.000	1.00	0.00	1.00	1.00	1.00	1.000
WOMENS REST 113	None	200	200	200	200	200	1.000	1.00	0.00	1.00	1.00	1.00	1.000
RTU-1		4,091	4,153	4,091	1,585	778							1.000
AC-1		0	0	0	0	0							0.000
HEATING ONLY		0	0	0	0	0							0.000

Project Name:
Dataset Name: 2301115 RIPTA.trc

TRACE® 700 v6.3.5 calculated at 04:43 PM on 02/05/2024
Alternative - 1 ASHRAE Standard 62.1-2004/2007 Report Page 2 of 3

ASHRAE Standard 62.1-2004-2010

By BL Companies

Ventilation Calculations for Heating Design

System Zone Room	Box Type	Vpz cfm	Vtan cfm	Vdz cfm	Vpz-min cfm	Voz-htg cfm	Zd	Ep	Er	Fa	Fb	Fc	Evz
Alternative 1													
WAITING 100	None	880	880	880	880	107	0.122	1.00	0.00	1.00	1.00	1.00	1.000
POLICE SUB STATION 105	None	43	43	43	43	9	0.198	1.00	0.00	1.00	1.00	1.00	1.000
TLT 107	None	50	50	50	50	50	1.000	1.00	0.00	1.00	1.00	1.00	1.000
TLT 108	None	50	50	50	50	50	1.000	1.00	0.00	1.00	1.00	1.00	1.000
DRIVER BREAK/CS 106	None	162	162	162	162	162	1.000	1.00	0.00	1.00	1.00	1.00	1.000
MENS REST 112	None	200	200	200	200	200	1.000	1.00	0.00	1.00	1.00	1.00	1.000
WOMENS REST 113	None	200	200	200	200	200	1.000	1.00	0.00	1.00	1.00	1.00	1.000
RTU-1		1,585	1,585	1,585	1,585	778							1.000
AC-1		0	0	0	0	0							0.000
HEATING ONLY		0	0	0	0	0							0.000

Project Name:
Dataset Name: 2301115 RIPTA.trc

TRACE® 700 v6.3.5 calculated at 04:43 PM on 02/05/2024
Alternative - 1 ASHRAE Standard 62.1-2004/2007 Report Page 3 of 3

Architecture
Engineering
Environmental
Land Surveying
BL Companies

355 Research Parkway
Meriden, CT 06450
(203) 630-1406
(203) 630-2615 Fax

JESSE E. VOSE
No. 18
REGISTERED
PROFESSIONAL ENGINEER
MECHANICAL

PAWTUCKET-CENTRAL FALLS TRANSIT CENTER
300 PINE STREET PAWTUCKET, RI

REVISIONS

NO	DATE	DESCRIPTION

Designed:	PMS
Drawn:	PMS
Reviewed:	JV
Project No.:	2301115
Date:	04/09/2024
Issued for:	CONSTRUCTION DOCUMENTS

Title:
MECHANICAL
VENTILATION
CALCULATIONS

Sheet No.
M004

4/4/2024 1:58:34 PM C:\Users\pmscofield\Documents\2301115_RIPTA_PassengerFacility_R23_MEP_pmscofield4GXCV.rvt

© 2022 BL COMPANIES, INC. THESE DRAWINGS SHALL NOT BE UTILIZED BY ANY PERSON, FIRM OR CORPORATION WITHOUT THE SPECIFIC WRITTEN PERMISSION OF BL COMPANIES.

COMcheck Software Version COMcheckWeb
Mechanical Compliance Certificate

Project Information

Energy Code:	2018 IECC
Project Title:	2301115 PAWTUCKET-CENTRAL FALLS TRANSIT CENTER
Location:	Pawtucket, Rhode Island
Climate Zone:	5a
Project Type:	New Construction

Construction Site:	Owner/Agent:	Designer/Contractor:
300 PINE STREET PAWTUCKET, Rhode Island 02860	RHODE ISLAND PUBLIC TRANSIT AUTHORITY 705 ELMWOOD AVE PROVIDENCE, Rhode Island 02907	Luana Andreianu BL Companies 2346 Post Road Suite 100 Warwick, Rhode Island 02886 4015932039 landreianu@blcompanies.com

Additional Efficiency Package(s)

Credits: 1.0 Required 1.0 Proposed
Reduced Lighting Power, 1.0 credit

Mechanical Systems List

Quantity	System Type & Description
1	RTU-1 (Single Zone): Heating: 1 each - Central Furnace, Gas, Capacity = 250 kBtu/h Proposed Efficiency = 81.00% Et, Required Efficiency: 80.00 % Et Cooling: 1 each - Single Package DX Unit, Capacity = 112 kBtu/h, Air-Cooled Condenser, Air Economizer Proposed Efficiency = 12.10 EER, Required Efficiency = 11.00 EER Proposed Part Load Efficiency = 23.00 IEER, Required Part Load Efficiency = 12.60 IEER Fan System: FAN SYSTEM 1 -- Compliance (Motor nameplate HP and fan efficiency method) : Passes Fans: FAN 1 Supply, Single-Zone VAV, 4100 CFM, 2.8 motor nameplate hp, 0.0 fan efficiency grade, 0.0 total fan efficiency, 0.0 design fan efficiency , fan exception: Single fan <= 5HP
1	AC-1 (Single Zone): Cooling: 1 each - Split System, Capacity = 12 kBtu/h, Air-Cooled Condenser, Unknown Economizer Proposed Efficiency = 21.00 SEER, Required Efficiency = 13.00 SEER Proposed Part Load Efficiency = 0.00 , Required Part Load Efficiency = 0.00 Fan System: FAN SYSTEM 2 -- Compliance (Motor nameplate HP and fan efficiency method) : Passes Fans: FAN 2 Supply, Constant Volume, 455 CFM, 0.1 motor nameplate hp, 0.0 fan efficiency grade, 0.0 total fan efficiency, 0.0 design fan efficiency , fan exception: Single fan <= 5HP
3	EWHs (Unknown w/ PerimeterSystem): Heating: 3 each - Unit Heater, Electric, Capacity = 5 kBtu/h No minimum efficiency requirement applies Fan System: FAN SYSTEM 3 -- Compliance (Motor nameplate HP and fan efficiency method) : Passes Fans: FAN 4 Supply, Constant Volume, 100 CFM, 0.1 motor nameplate hp, 0.0 fan efficiency grade, 0.0 total fan efficiency, 0.0 design fan efficiency , fan exception: Single fan <= 5HP

Mechanical Compliance Statement

Compliance Statement: The proposed mechanical design represented in this document is consistent with the building plans, specifications, and other calculations submitted with this permit application. The proposed mechanical systems have been designed to meet the 2018 IECC requirements in COMcheck Version COMcheckWeb and to comply with any applicable mandatory requirements listed in the Inspection Checklist.

PAUL SCOFIELD - SENIOR ENGINEER II	Paul Scofield	03/11/2024
Name - Title	Signature	Date

COMcheck Software Version COMcheckWeb
Inspection Checklist

Energy Code: 2018 IECC

Requirements: 100.0% were addressed directly in the COM*check* software

Text in the "Comments/Assumptions" column is provided by the user in the COMcheck Requirements screen. For each requirement, the user certifies that a code requirement will be met and how that is documented, or that an exception is being claimed. Where compliance is itemized in a separate table, a reference to that table is provided.

Section # & Req.ID	Plan Review	Complies?	Comments/Assumptions
C103.2 [PR2][1]	Plans, specifications, and/or calculations provide all information with which compliance can be determined for the mechanical systems and equipment and document where exceptions to the standard are claimed. Load calculations per acceptable engineering standards and handbooks.	☐Complies ☐Does Not ☐Not Observable ☐Not Applicable	Requirement will be met.
C406 [PR9][1]	Plans, specifications, and/or calculations provide all information with which compliance can be determined for the additional energy efficiency package options.	☐Complies ☐Does Not ☐Not Observable ☐Not Applicable	

Additional Comments/Assumptions:

1 High Impact (Tier 1) | 2 Medium Impact (Tier 2) | 3 Low Impact (Tier 3)

Section # & Req.ID	Footing / Foundation Inspection	Complies?	Comments/Assumptions
C403.12.2, C403.12.3 [FO9][3]	Snow/ice melting system and freeze protection systems have sensors and controls configured to limit service for pavement temperature and outdoor temperature. future connection to controls.	☐Complies ☐Does Not ☐Not Observable ☐Not Applicable	**Exception:** Requirement does not apply.

Additional Comments/Assumptions:

1 High Impact (Tier 1) | 2 Medium Impact (Tier 2) | 3 Low Impact (Tier 3)

Section # & Req.ID	Plumbing Rough-In Inspection	Complies?	Comments/Assumptions
C404.5, C404.5.1, C404.5.2 [PL6][3]	Heated water supply piping conforms to pipe length and volume requirements. Refer to section details.	☐Complies ☐Does Not ☐Not Observable ☐Not Applicable	Requirement will be met.
C404.6.3 [PL7][3]	Pumps that circulate water between a heater and storage tank have controls that limit operation from startup to <= 5 minutes after end of heating cycle.	☐Complies ☐Does Not ☐Not Observable ☐Not Applicable	**Exception:** Requirement does not apply.
C404.7 [PL8][3]	Demand recirculation water systems have controls that start the pump upon receiving a signal from the action of a user of a fixture or appliance and limits the temperature of the water entering the cold-water piping to 104°F.	☐Complies ☐Does Not ☐Not Observable ☐Not Applicable	**Exception:** Requirement does not apply.

Additional Comments/Assumptions:

1 High Impact (Tier 1) | 2 Medium Impact (Tier 2) | 3 Low Impact (Tier 3)

Section # & Req.ID	Mechanical Rough-In Inspection	Complies?	Comments/Assumptions
C402.2.6 [ME41][3]	Thermally ineffective panel surfaces of sensible heating panels have insulation >= R-3.5.	☐Complies ☐Does Not ☐Not Observable ☐Not Applicable	**Exception:** Requirement does not apply.
C403.11.3 [ME61][2]	HVAC piping insulation insulated in accordance with Table C403.11.3. Insulation exposed to weather is protected from damage and is provided with shielding from solar radiation.	☐Complies ☐Does Not ☐Not Observable ☐Not Applicable	Requirement will be met.
C403.8.4 [ME142][2]	Motors for fans that are not less than 1/12 hp and less than 1 hp are electronically commutated motors or have a minimum motor efficiency of 70 percent. These motors have the means to adjust motor speed.	☐Complies ☐Does Not ☐Not Observable ☐Not Applicable	Requirement will be met.
C403.8.5 [ME143][2]	Each DX cooling system > 65 kBtu and chiller water/evaporative cooling system with fans > 1/4 hp are designed to vary the indoor fan airflow as a function of load and comply with detailed requirements of this section.	☐Complies ☐Does Not ☐Not Observable ☐Not Applicable	Requirement will be met.
C403.12.1 [ME71][2]	Systems that heat outside the building envelope are radiant heat systems controlled by an occupancy sensing device or timer switch.	☐Complies ☐Does Not ☐Not Observable ☐Not Applicable	**Exception:** Requirement does not apply.
C403.5.5 [ME113][2]	Fault detection and diagnostics installed with air-cooled unitary DX units having economizers.	☐Complies ☐Does Not ☐Not Observable ☐Not Applicable	Requirement will be met.
C403.2.2 [ME59][1]	Natural or mechanical ventilation is provided in accordance with International Mechanical Code Chapter 4. Mechanical ventilation has capability to reduce outdoor air supply to minimum per IMC Chapter 4.	☐Complies ☐Does Not ☐Not Observable ☐Not Applicable	Requirement will be met.
C403.7.1 [ME59][1]	Demand control ventilation provided for spaces >500 ft2 and >25 people/1000 ft2 occupant density and served by systems with air side economizer, auto modulating outside air damper control, or design airflow >3,000 cfm.	☐Complies ☐Does Not ☐Not Observable ☐Not Applicable	Requirement will be met.
C403.7.2 [ME115][3]	Enclosed parking garage ventilation has automatic contaminant detection and capacity to stage or modulate fans to 50% or less of design capacity.	☐Complies ☐Does Not ☐Not Observable ☐Not Applicable	**Exception:** Requirement does not apply.
C403.7.6 [ME141][3]	HVAC systems serving guestrooms in Group R-1 buildings with > 50 guestrooms: Each guestroom is provided with controls that automatically manage temperature setpoint and ventilation (see sections C403.7.6.1 and C403.7.6.2).	☐Complies ☐Does Not ☐Not Observable ☐Not Applicable	**Exception:** Requirement does not apply.
C403.7.4 [ME57][1]	Exhaust air energy recovery on systems meeting Table C403.7.4(1) and C403.7.4(2).	☐Complies ☐Does Not ☐Not Observable ☐Not Applicable	**Exception:** Requirement does not apply.

1 High Impact (Tier 1) | 2 Medium Impact (Tier 2) | 3 Low Impact (Tier 3)

Section # & Req.ID	Mechanical Rough-In Inspection	Complies?	Comments/Assumptions
C403.7.5 [ME116][3]	Kitchen exhaust systems comply with replacement air and conditioned supply air limitations, and satisfy hood rating requirements and maximum exhaust rate criteria.	☐Complies ☐Does Not ☐Not Observable ☐Not Applicable	**Exception:** Requirement does not apply.
C403.11.1, C403.11.2 [ME60][2]	HVAC ducts and plenums insulated in accordance with C403.11.1 and constructed in accordance with C403.11.2, verification may need to occur during Foundation Inspection.	☐Complies ☐Does Not ☐Not Observable ☐Not Applicable	Requirement will be met.
C403.5, C403.5.1, C403.5.2 [ME62][1]	Air economizers provided where required, meet the requirements for design capacity, control signal, ventilation controls, high-limit shut-off, integrated economizer control, and provide a means to relieve excess outside air during operation.	☐Complies ☐Does Not ☐Not Observable ☐Not Applicable	Requirement will be met.
C403.5.3.3 [ME124][1]	Air economizers automatically reduce outdoor air intake to the design minimum outdoor air quantity when outdoor air intake will not reduce cooling energy usage. See Table C403.5.3.3 for applicable device types and climate zones.	☐Complies ☐Does Not ☐Not Observable ☐Not Applicable	Requirement will be met.
C403.5.3.4 [ME125][1]	System capable of relieving excess outdoor air during air economizer operation to prevent overpressurizing the building. The relief air outlet located to avoid recirculation into the building.	☐Complies ☐Does Not ☐Not Observable ☐Not Applicable	Requirement will be met.
C403.5.3.5 [ME126][1]	Return, exhaust/relief and outdoor air dampers used in economizers have motorized dampers that automatically shut when not in use and meet maximum leakage rates. Reference section C403.7.7 for details.	☐Complies ☐Does Not ☐Not Observable ☐Not Applicable	Requirement will be met.
C403.4.1.4 [ME63][2]	Heating for vestibules and air curtains with integral heating include automatic controls that shut off the heating system when outdoor air temperatures > 45F. Vestibule heating and cooling systems controlled by a thermostat in the vestibule with heating setpoint <= 60F and cooling setpoint >= 80F.	☐Complies ☐Does Not ☐Not Observable ☐Not Applicable	Requirement will be met.
C403.3.3 [ME35][1]	Hot gas bypass limited to: <=240 kBtu/h – 50% >240 kBtu/h – 25%	☐Complies ☐Does Not ☐Not Observable ☐Not Applicable	Requirement will be met.
C408.2.2.1 [ME53][3]	Air outlets and zone terminal devices have means for air balancing.	☐Complies ☐Does Not ☐Not Observable ☐Not Applicable	Requirement will be met.
C403.5, C403.5.1, C403.5.2 [ME123][3]	Refrigerated display cases, walk-in coolers or walk-in freezers served by remote compressors and remote condensers not located in a condensing unit, have fan-powered condensers that comply with Sections C403.5.1 and refrigeration compressor systems that comply with C403.5.2..	☐Complies ☐Does Not ☐Not Observable ☐Not Applicable	**Exception:** Requirement does not apply.

1 High Impact (Tier 1) | 2 Medium Impact (Tier 2) | 3 Low Impact (Tier 3)

Additional Comments/Assumptions:

1 High Impact (Tier 1) | 2 Medium Impact (Tier 2) | 3 Low Impact (Tier 3)

BL Companies
Architecture
Engineering
Environmental
Land Surveying

355 Research Parkway
Meriden, CT 06450
(203) 630-1406
(203) 630-2615 Fax

JESSE E. VOSE
STATE OF RHODE ISLAND
No. 14344
HOPE
REGISTERED
PROFESSIONAL ENGINEER
MECHANICAL

PAWTUCKET-CENTRAL FALLS TRANSIT CENTER
300 PINE STREET PAWTUCKET, RI

REVISIONS

NO	DATE	DESCRIPTION

Designed:	PMS
Drawn:	PMS
Reviewed:	JV
Project No.:	2301115
Date:	04/09/2024

Issued for:
CONSTRUCTION DOCUMENTS

Title:
MECHANICAL ENERGY COMPLIANCE

Sheet No.
M006

4/4/2024 1:58:35 PM C:\Users\pmscofield\Documents\2301115_RIPTA_PassengerFacility_R23_MEP_pmscofield4GXCV.rvt

© 2022 BL COMPANIES, INC. THESE DRAWINGS SHALL NOT BE UTILIZED BY ANY PERSON, FIRM OR CORPORATION WITHOUT THE SPECIFIC WRITTEN PERMISSION OF BL COMPANIES.

Section # & Req.ID	Rough-In Electrical Inspection	Complies?	Comments/Assumptions
C405.6 [EL26][1]	Low-voltage dry-type distribution electric transformers meet the minimum efficiency requirements of Table C405.6.	☐Complies ☐Does Not ☐Not Observable ☐Not Applicable	
C405.7 [EL27][1]	Electric motors meet the minimum efficiency requirements of Tables C405.7(1) through C405.7(4). Efficiency verified through certification under an approved certification program or the equipment efficiency ratings shall be provided by motor manufacturer (where certification programs do not exist).	☐Complies ☐Does Not ☐Not Observable ☐Not Applicable	
C405.8.2, C405.8.2.1 [EL28][1]	Escalators and moving walks comply with ASME A17.1/CSA B44 and have automatic controls configured to reduce speed to the minimum permitted speed in accordance with ASME A17.1/CSA B44 or applicable local code when not conveying passengers.	☐Complies ☐Does Not ☐Not Observable ☐Not Applicable	
C405.9 [EL29][1]	Total voltage drop across the combination of feeders and branch circuits <= 5%.	☐Complies ☐Does Not ☐Not Observable ☐Not Applicable	

Additional Comments/Assumptions:

1	High Impact (Tier 1)	2	Medium Impact (Tier 2)	3	Low Impact (Tier 3)

Project Title: 2301115 PAWTUCKET-CENTRAL FALLS TRANSIT CENTER
Data filename:
Report date: 03/11/24
Page 9 of 11

Section # & Req.ID	Final Inspection	Complies?	Comments/Assumptions
C303.3, C408.2.5.3 [FI8][1]	Furnished O&M manuals for HVAC systems within 90 days of system acceptance.	☐Complies ☐Does Not ☐Not Observable ☐Not Applicable	Requirement will be met.
C403.2.2 [FI27][1]	HVAC systems and equipment capacity does not exceed calculated loads.	☐Complies ☐Does Not ☐Not Observable ☐Not Applicable	Requirement will be met.
C403.2.4.1 [FI47][1]	Heating and cooling to each zone is controlled by a thermostat control. Minimum one humidity control device per installed humidification/dehumidification system.	☐Complies ☐Does Not ☐Not Observable ☐Not Applicable	Requirement will be met.
C403.4.1.2 [FI38][1]	Thermostatic controls have a 5 °F deadband.	☐Complies ☐Does Not ☐Not Observable ☐Not Applicable	Requirement will be met.
C403.2.4.1.3 [FI20][1]	Temperature controls have setpoint overlap restrictions.	☐Complies ☐Does Not ☐Not Observable ☐Not Applicable	**Exception:** Requirement does not apply.
C403.2.4.2 [FI39][1]	Each zone equipped with setback controls using automatic time clock or programmable control system.	☐Complies ☐Does Not ☐Not Observable ☐Not Applicable	Requirement will be met.
C403.2.4.2.1, C403.2.4.2.2 [FI40][1]	Automatic Controls: Setback to 55°F (heat) and 85°F (cool); 7-day clock, 2-hour occupant override, 10-hour backup	☐Complies ☐Does Not ☐Not Observable ☐Not Applicable	Requirement will be met.
C403.2.4.2.3 [FI41][1]	Systems include optimum start controls.	☐Complies ☐Does Not ☐Not Observable ☐Not Applicable	Requirement will be met.
C408.1.1 [FI57][1]	Building operations and maintenance documents will be provided to the owner. Documents will cover manufacturers' information, specifications, programming procedures and means of illustrating to owner how building, equipment and systems are intended to be installed, maintained, and operated.	☐Complies ☐Does Not ☐Not Observable ☐Not Applicable	
C408.2.1 [FI28][1]	Commissioning plan developed by registered design professional or approved agency.	☐Complies ☐Does Not ☐Not Observable ☐Not Applicable	Requirement will be met.
C408.2.3.1 [FI31][1]	HVAC equipment has been tested to ensure proper operation.	☐Complies ☐Does Not ☐Not Observable ☐Not Applicable	Requirement will be met.

1	High Impact (Tier 1)	2	Medium Impact (Tier 2)	3	Low Impact (Tier 3)

Project Title: 2301115 PAWTUCKET-CENTRAL FALLS TRANSIT CENTER
Data filename:
Report date: 03/11/24
Page 10 of 11

Section # & Req.ID	Final Inspection	Complies?	Comments/Assumptions
C408.2.3.2 [FI10][1]	HVAC control systems have been tested to ensure proper operation, calibration and adjustment of controls.	☐Complies ☐Does Not ☐Not Observable ☐Not Applicable	Requirement will be met.
C408.2.3.3 [FI32][1]	Economizers have been tested to ensure proper operation.	☐Complies ☐Does Not ☐Not Observable ☐Not Applicable	Requirement will be met.
C408.2.4 [FI29][1]	Preliminary commissioning report completed and certified by registered design professional or approved agency.	☐Complies ☐Does Not ☐Not Observable ☐Not Applicable	Requirement will be met.
C408.2.5.1 [FI7][1]	Furnished HVAC as-built drawings submitted within 90 days of system acceptance.	☐Complies ☐Does Not ☐Not Observable ☐Not Applicable	Requirement will be met.
C408.2.5.3 [FI43][1]	An air and/or hydronic system balancing report is provided for HVAC systems.	☐Complies ☐Does Not ☐Not Observable ☐Not Applicable	Requirement will be met.
C408.2.5.4 [FI30][1]	Final commissioning report due to building owner within 90 days of receipt of certificate of occupancy.	☐Complies ☐Does Not ☐Not Observable ☐Not Applicable	Requirement will be met.

Additional Comments/Assumptions:

1	High Impact (Tier 1)	2	Medium Impact (Tier 2)	3	Low Impact (Tier 3)

Project Title: 2301115 PAWTUCKET-CENTRAL FALLS TRANSIT CENTER
Data filename:
Report date: 03/11/24
Page 11 of 11

Architecture
Engineering
Environmental
Land Surveying
BL Companies

355 Research Parkway
Meriden, CT 06450
(203) 630-1406
(203) 630-2615 Fax

JESSE E. VOSE
No.
REGISTERED
PROFESSIONAL ENGINEER
MECHANICAL

PAWTUCKET-CENTRAL FALLS TRANSIT CENTER
300 PINE STREET PAWTUCKET, RI

REVISIONS

NO	DATE	DESCRIPTION

Designed:	PMS
Drawn:	PMS
Reviewed:	JV
Project No.:	2301115
Date:	04/09/2024
Issued for:	CONSTRUCTION DOCUMENTS

Title:
MECHANICAL ENERGY COMPLIANCE

Sheet No.
M007

4/4/2024 1:58:35 PM C:\Users\pmscofield\Documents\2301115_RIPTA_PassengerFacility_R23_MEP_pmscofield4GXCV.rvt

© 2022 BL COMPANIES, INC. THESE DRAWINGS SHALL NOT BE UTILIZED BY ANY PERSON, FIRM OR CORPORATION WITHOUT THE SPECIFIC WRITTEN PERMISSION OF BL COMPANIES.

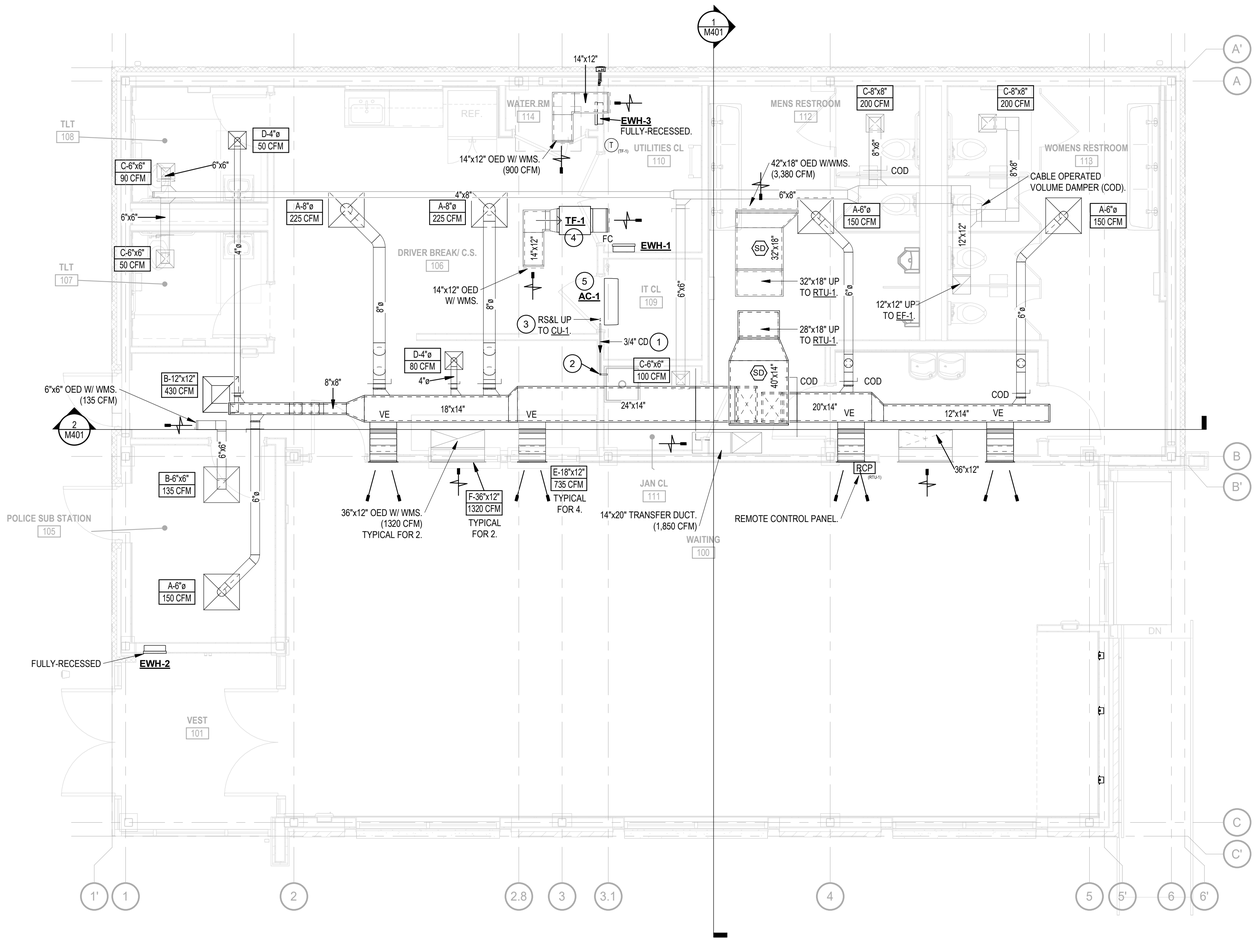

1 FIRST FLOOR MECHANICAL PLAN
1/4" = 1'-0"

MECHANICAL GENERAL NOTES:

1. ALL COMBINATION FIRE/SMOKE AND FIRE DAMPERS SHALL BE PROVIDED WITH DUCT ACCESS DOORS OF ADEQUATE SIZE TO PROVIDE SERVICE AND MAINTENANCE. WHERE THE DAMPERS ARE IN INACCESSIBLE LOCATIONS, COORDINATE THE LOCATIONS OF THE DAMPERS AND THEIR RESPECTIVE DUCT ACCESS DOORS WITH THE GENERAL CONTRACTOR TO PROVIDE ACCESS DOORS IN FINISHED SURFACES - MIN. 18"x18". WHERE THE CONSTRUCTION ASSEMBLY HAS A FIRE RATING, THE ACCESS DOORS SHALL BE RATED TO MATCH.
2. PROVIDE CABLE OPERATED VOLUME DAMPERS (COD) AT ALL LOCATIONS WHERE THE DAMPER IS LOCATED BEHIND AN INACCESSIBLE ASSEMBLY. THE MECHANICAL CONTRACTOR SHALL COORDINATE THE LOCATION OF THE OPERATORS TO ALLOW FOR CONVENIENT OPERATION, INSTALLED IN ACCORDANCE WITH THE MANUFACTURERS INSTALLATION INSTRUCTIONS.
3. USE OF COMBUSTIBLE MATERIALS IS NOT ALLOWED IN THE RETURN AIR PLENUM. MATERIALS USED IN THE PLENUM SHALL HAVE A FLAME SPREAD RATING NOT TO EXCEED 25, AND A SMOKE DEVELOPED RATING NOT TO EXCEED 50 WHEN TESTED IN ACCORDANCE WITH ASTM E 84. ALL EXPOSED WIRING IN THE PLENUM SHALL BE PLENUM RATED.
4. PROVIDE NECESSARY LOW VOLTAGE WIRING, POWER SUPPLIES TO CONTROLLER, & TRANSFORMERS TO SUPPLY POWER TO THE REMOTE SENSORS AS REQUIRED BY MANUFACTURER.
5. MOUNT SPACE THERMOSTATS/CONTROLLERS AT 60" AFF.

MECHANICAL KEY NOTES:

(NOT ALL KEY NOTES APPEAR ON ALL SHEETS)

1. PITCH COOLING COIL CONDENSATE (CD) 1/4" PER FOOT IN DIRECTION OF FLOW. SIZE AS FOLLOWS: 3/4" UP TO 2 TONS, 1" UP TO 5 TONS, 1-1/4" UP TO 30 TONS. WHERE PITCH IS LESS THAN ABOVE, INCREASE THE ABOVE VALUES ONE PIPE SIZE. INSULATE PIPING CONSISTENT WITH PIPING CONVEYING FLUIDS THAT ARE BELOW AMBIENT TEMPERATURE. PROVIDE WITH A CONTINUOUS VAPOR BARRIER, REFER TO SPECIFICATIONS FOR ADDITIONAL INFORMATION.

2. RUN THE COOLING COIL CONDENSATE (CD) DOWN TO A FLOOR DRAIN, MOP SINK OR INDIRECT SANITARY CONNECTION (REFER TO PLANS FOR DEVICE TYPE). RUN PIPING EXPOSED AND SECURED TO THE WALL OR CONCEALED WITHIN THE WALL. INSULATE PIPING CONSISTENT WITH PIPING CONVEYING FLUIDS THAT ARE BELOW AMBIENT TEMPERATURE. PROVIDE WITH A CONTINUOUS VAPOR BARRIER, REFER TO SPECIFICATIONS FOR ADDITIONAL INFORMATION. TERMINATE DRAIN OVER THE DEVICE AND MAINTAIN A MINIMUM 1" AIR GAP PER CODE.

3. THE MECHANICAL CONTRACTOR SHALL SIZE ALL REFRIGERANT (I.E. SUCTION, LIQUID, HOT-GAS, ETC...) LINES IN STRICT ACCORDANCE WITH MANUFACTURER'S INSTALLATION INSTRUCTIONS AND RECOMMENDATIONS. INSULATE ALL PIPING. REFER TO SPECS FOR ADDITIONAL INFO.

4. SUSPEND EQUIPMENT ON GALV. THREADED STEEL WITH SPRING TYPE VIBRATION ISOLATORS. LOCATE RODS AT ALL UNIT MOUNTING LOCATIONS IN ACCORDANCE WITH THE MANUF. WRITTEN INSTALLATION INSTRUCTIONS. ALL SUPPORTS SHALL BE SECURELY CONNECTED TO THE BUILDING STRUCTURAL STEEL. PROVIDE ADDITIONAL MISC. GALV. STEEL SUPPORTS TO ACCOMMODATE INSTALLATION AS REQUIRED. REFER TO DETAIL ON THE M4 SERIES DWGS.

5. MOUNT INDOOR AC UNIT HIGH ON THE WALL IN STRICT ACCORDANCE WITH THE MANUFACTURER'S INSTALLATION INSTRUCTIONS. PROVIDE A STAINLESS STEEL, CONTINUOUSLY WELDED WATER TIGHT DRAIN PAN BENEATH UNIT. DRAIN PAN SHALL EXTEND 4" BEYOND UNIT FOOTPRINT AND ALL PIPING.
   - PAN TO BE MOUNTED BELOW UNIT TO ALLOW FOR PROPER MAINTENANCE OF THE EQUIPMENT PER MANUFACTURER'S INSTRUCTIONS.
   - DRAIN PAN SHALL BE SECURED TO THE WALL VIA WELDED GALV. BRACKETS. THE PAN SHALL BE BOLTED AND SECURED TO THE BRACKETS - ANY PENETRATIONS SHALL BE SEALED WATERPROOF.
   - ALL FASTENERS SHALL BE LOAD RATED AND RUSTPROOF.
   - THE PAN AND SUPPORT BRACKET DESIGN AND SECUREMENT SHALL BE DELEGATED TO THE MC.
   - THE DRAIN PAN TO BE PROVIDED WITH A LEAK DETECTOR - BASIS OF DESIGN, LIEBERT LT460. THE LEAK DETECTOR SHALL BE POWERED AND MONITORED THROUGH THE BMS PANEL. ACTIVATION OF THE PAN LEAK DETECTOR SHALL GENERATE A SPECIFIC ALARM AT THE BMS SYSTEM.

TRUE NORTH

Architecture
Engineering
Environmental
Land Surveying
BL Companies
355 Research Parkway
Meriden, CT 06450
(203) 630-1406
(203) 630-2615 Fax

JESSE E. VOSE
No. 15,000
REGISTERED
PROFESSIONAL ENGINEER
MECHANICAL

PAWTUCKET-CENTRAL FALLS TRANSIT CENTER
300 PINE STREET PAWTUCKET, RI

REVISIONS

NO	DATE	DESCRIPTION

Designed:	PMS
Drawn:	PMS
Reviewed:	JV
Project No.:	2301115
Date:	04/09/2024

Issued for:
CONSTRUCTION DOCUMENTS

Title:
OVERALL FIRST FLOOR MECHANICAL PLAN

Sheet No.
M101.1

4/4/2024 1:58:37 PM C:\Users\pmscofield\Documents\2301115_RIPTA_PassengerFacility_R23_MEP_pmscofield4GXCV.rvt

© 2022 BL COMPANIES, INC. THESE DRAWINGS SHALL NOT BE UTILIZED BY ANY PERSON, FIRM OR CORPORATION WITHOUT THE SPECIFIC WRITTEN PERMISSION OF BL COMPANIES.

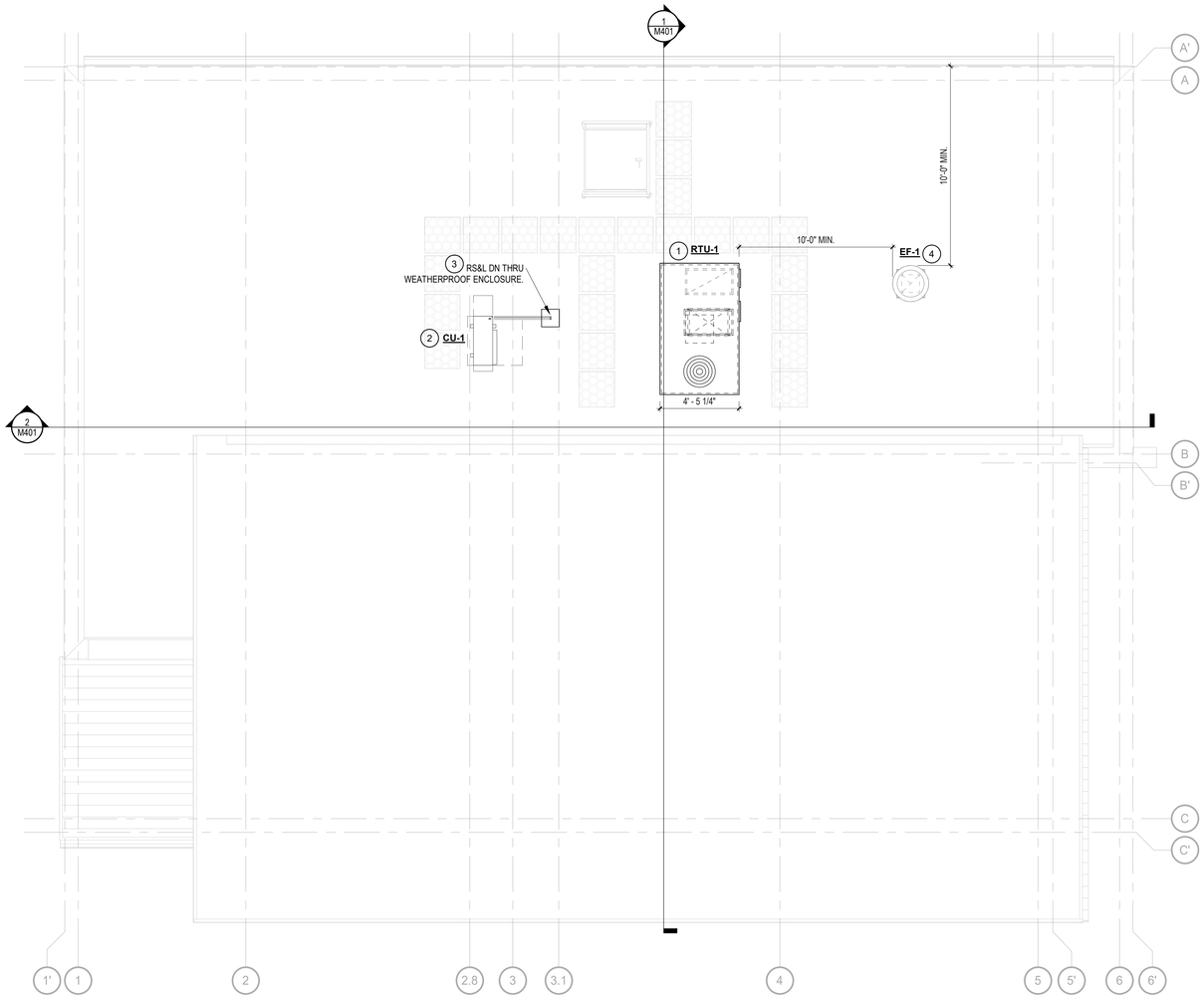

1 ROOF MECHANICAL PLAN
1/4" = 1'-0"

UNIT CONFIGURATION NOTES:

1. UNIT CONFIGURATION IS BASED ON THE "BASIS OF DESIGN" (BOD) UNIT SPECIFIED. IF THE BOD IS NOT BEING PROVIDED, THEN SUBMIT REQUESTS FOR "EQUALS OR SUBSTITUTIONS" IN ACCORDANCE WITH "SUBSTITUTION PROCEDURES". WHEN SELECTING AN "EQUAL OR SUBSTITUTION", PROVIDE A UNIT THAT MATCHES THE SIGNIFICANT QUALITIES (I.E. CONFIGURATION, WEIGHT, SIZE, ETC...) OF THE BOD. CONTRACTOR IS RESPONSIBLE FOR ALL COORDINATION RELATED TO SUBSTITUTION. ANY CHANGES TO THE ABOVE RESULTING FROM THE PROPOSED EQUAL OR SUBSTITUTION SHALL BE THE RESPONSIBILITY OF THE MC.
2. UNIT WEIGHT REPRESENTS THE UNIT WITH ALL SPECIFIED FEATURES AND INSTALLED OPTIONS. THE WEIGHT DOES NOT INCLUDE ROOF CURB OR STEEL DUNNAGE. REFER TO PLANS FOR METHOD OF SUPPORT.

ROOF PLAN GENERAL NOTES:

1. DO NOT INSTALL ANY PIECE OF MECHANICAL EQUIPMENT WITHIN 10'-0" OF THE BUILDING ROOF EDGE WITH THE EXCEPTION OF EQUIPMENT LOCATED WITHIN OR NEAR AN ARCHITECTURAL SCREEN WALL. COORDINATE WITH OTHER TRADES.
2. DO NOT INSTALL ANY PIECE OF MECHANICAL EQUIPMENT WITH AN OUTDOOR AIR INTAKE (OAI) WITHIN 10'-0" HORIZONTALLY OF A BUILDING EXHAUST/VENT (I.E. RADON VENT, PLUMBING VENT, EXHAUST FAN, ETC... INDICATE ALL EXH/VENTS NEAR THE OAI ON THE COORDINATION SHOP DRAWINGS. WHERE THE LOCATION OF THE EQUIPMENT CANNOT SATISFY THE ABOVE REQUIREMENT, THE MC SHALL COORDINATE WITH WORK BY OTHER SECTION/DIVISIONS TO EXTEND ANY EXH/VENT'S SO THE DISCHARGE IS 3'-0" HIGHER THAN THE OAI. EXTENSIONS SHALL BE FULLY SECURED AND/OR SUPPORTED TO THE BUILDING STRUCTURE TO WITHSTAND WIND FORCES PER THE BUILDING CODE. THE MEANS BY WHICH THE EXH/VENT DISCHARGE IS TO BE MODIFIED SHALL BE DELEGATED TO ITS RESPECTIVE CONTRACTOR(S).

MECHANICAL ROOF PLAN KEY NOTES:

1. MOUNT UNIT ON NEW 24" HIGH PRE-FABRICATED, INSULATED ROOF CURB. CURBS SHALL SUPPORT THE EQUIPMENT AROUND THE UNITS FULL PERIMETER, INCLUDING PIPING ENCLOSURE(S). MAINTAIN THE MINIMUM CLEARANCES AROUND THE UNIT FOR SERVICING AND MAINTENANCE PER THE MANUFACTURER'S WRITTEN INSTALLATION INSTRUCTIONS. REFER TO DETAIL ON THE M4 SERIES DRAWINGS FOR ADDITIONAL INFORMATION. WHERE REQUIRED, MISC. GALV. STRUCTURAL STEEL SHALL BE PROVIDED BELOW THE ROOF THAT WILL FULLY SUPPORT THE EQUIPMENT AROUND THE UNITS FULL PERIMETER. COORDINATE WORK WITH THE ALL TRADES.
2. MOUNT UNIT ON PRE-FABRICATED ROOF RAILS. THE MECH. CONTRACTOR SHALL COORDINATE THE ORIENTATION OF THE ROOF EQUIP. RAILS TO SPAN A MINIMUM OF TWO ROOF BEAMS/JOISTS BELOW. PROVIDE MISC. GALV. STEEL TO CONTINUOUSLY SUPPORT THE RAILS FROM BELOW. REFER TO DETAIL ON THE M4 SERIES DRAWINGS FOR ADDITIONAL INFORMATION. COORDINATE WORK WITH THE ALL TRADES.
3. PROVIDE A WEATHERRPROOF PIPING PORTAL SYSTEM SIMILAR TO ROOF PRODUCTS & SYSTEMS (RPS). SYSTEM SHALL CONSIST OF A GALVANIZED, PRE-FAB, INSULATED ROOF CURB W/ MOLDED ABS PLASTIC COVER, MOLDED EDPM RUBBER CAP & STAINLESS STEEL CLAMPS. CURB SHALL BE COMPATIBLE WITH ROOF. COORDINATE WORK WITH THE ALL TRADES.
4. EXHAUST FAN MOUNTED ON ROOF ON A 24" HIGH PRE-FAB, INSULATED ALUMINUM ROOF CURB. REFER TO DETAIL ON THE M5 SERIES DRAWINGS FOR ADDITIONAL INFORMATION. COORDINATE WORK WITH THE ALL TRADES.

TRUE NORTH

Architecture
Engineering
Environmental
Land Surveying
BL Companies

355 Research Parkway
Meriden, CT 06450
(203) 630-1406
(203) 630-2615 Fax

JESSE E. VOSE
No. 17
REGISTERED
PROFESSIONAL ENGINEER
MECHANICAL

PAWTUCKET-CENTRAL FALLS TRANSIT CENTER
300 PINE STREET PAWTUCKET, RI

REVISIONS

NO	DATE	DESCRIPTION

Designed:	PMS
Drawn:	PMS
Reviewed:	JV
Project No.:	2301115
Date:	04/09/2024

Issued for:
CONSTRUCTION DOCUMENTS

Title:
OVERALL ROOF MECHANICAL PLAN

Sheet No.
M101.2

4/4/2024 1:58:38 PM C:\Users\pmscofield\Documents\2301115_RIPTA_PassengerFacility_R23_MEP_pmscofield4GXCV.rvt

© 2022 BL COMPANIES, INC. THESE DRAWINGS SHALL NOT BE UTILIZED BY ANY PERSON, FIRM OR CORPORATION WITHOUT THE SPECIFIC WRITTEN PERMISSION OF BL COMPANIES.

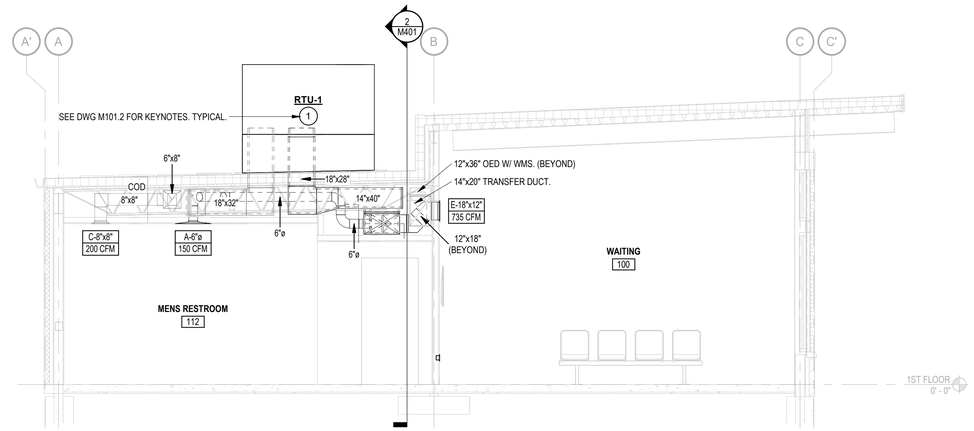

1 SECTION #1 AT RTU-1
1/4" = 1'-0"

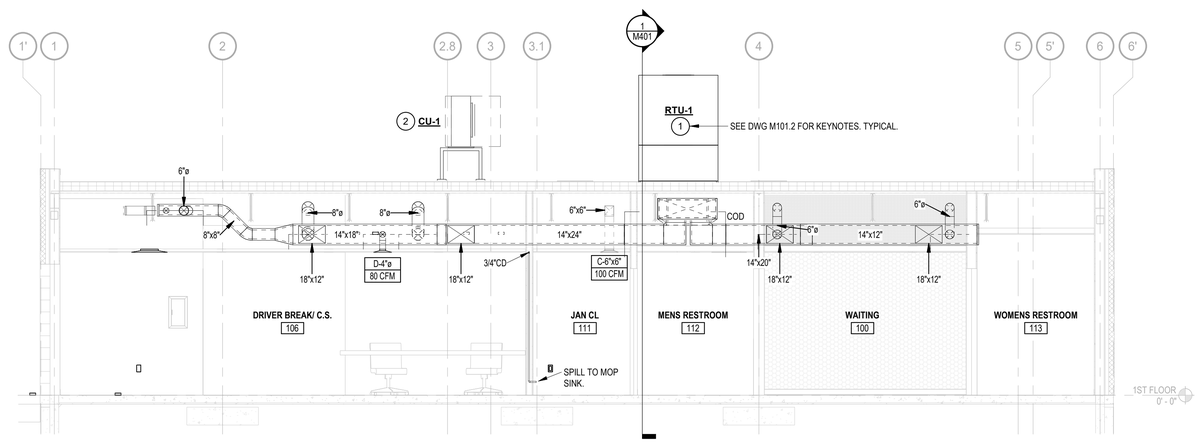

2 SECTION #2 AT RTU-1
1/4" = 1'-0"

4/4/2024 1:58:40 PM C:\Users\pmscofield\Documents\2301115_RIPTA_PassengerFacility_R23_MEP_pmscofieldGXCV.rvt

© 2022 BL COMPANIES, INC. THESE DRAWINGS SHALL NOT BE UTILIZED BY ANY PERSON, FIRM OR CORPORATION WITHOUT THE SPECIFIC WRITTEN PERMISSION OF BL COMPANIES.

Architecture
Engineering
Environmental
Land Surveying
BL Companies

355 Research Parkway
Meriden, CT 06450
(203) 630-1406
(203) 630-2615 Fax

JESSE E. VOSE
No.
REGISTERED
PROFESSIONAL ENGINEER
MECHANICAL

PAWTUCKET-CENTRAL FALLS TRANSIT CENTER
300 PINE STREET PAWTUCKET, RI

REVISIONS

NO	DATE	DESCRIPTION

Designed:	PMS
Drawn:	PMS
Reviewed:	JV
Project No.:	2301115
Date:	04/09/2024

Issued for:
CONSTRUCTION DOCUMENTS

Title:
MECHANICAL ENLARGED PLANS

Sheet No.
M401

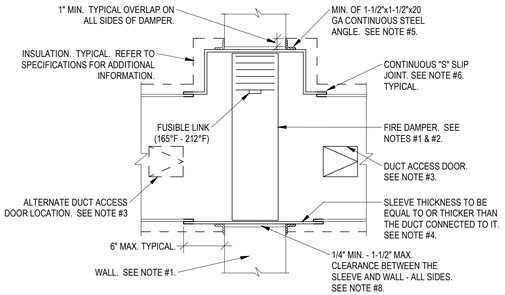

NOTES:
1. REFER TO THE ARCHITECTURAL AND STRUCTURAL DOCUMENTS FOR EXACT WALL ASSEMBLY CONSTRUCTION. DEPTH OF DAMPER TO BE COORDINATED WITH WALL THICKNESS. DAMPER SHALL BE INSTALLED SO THE CENTER LINE OF THE DAMPER IS WITHIN THE WALL.
2. BASED ON THE ASSEMBLY AND ITS RATING, COORDINATE THE FIRE STOP SYSTEM REQUIREMENTS IN STRICT ACCORDANCE WITH THE UL FIRE RESISTANCE DIRECTORY. REFER TO SPECIFICATIONS, FOR ADDITIONAL INFORMATION.
3. WHERE THE DUCTWORK IS LOCATED IN AN INACCESSIBLE LOCATION, COORDINATE THE LOCATION OF ACCESS DOORS IN THE FINISHED SURFACE OF THE SHAFT WALL OR CEILING. COORDINATE WITH THE GC.
4. IF A BREAKAWAY CONNECTION IS NOT USED, THE SLEEVE SHALL BE A MIN. OF 16 GA FOR DAMPERS UP TO 36"Wx24"H AND 14 GA FOR DAMPERS EXCEEDING 36"Wx24H.
5. FOR OPENINGS IN METAL OR WOOD STUD WALLS, OR CONCRETE/MASONRY WALLS AND FLOORS OF 90"x49" OR LESS, MOUNTING ANGLES ARE REQUIRED ON ONE SIDE OF WALL OR TOP OF THE FLOOR AND ARE TO BE SECURED TO BOTH SLEEVE AND STRUCTURE. LARGER OPENINGS REQUIRE MOUNTING ANGLES ON BOTH SIDES OF THE STRUCTURE AND ONLY SECURED TO THE SLEEVE.
   A. FASTENER TYPE:
      a. SLEEVE - #10 BOLTS OR SCREWS OR 1/2" LONG WELDS
      b. MASONRY, WALL OR FLOOR - #10 SELF-TAPPING CONCRETE SCREWS.
      c. WOOD/STEEL STUD WALL - #10 SCREWS.
   B. FASTENER SPACING:
      a. ONE ANGLE INSTALLATIONS - SLEEVE - 6"O.C., WALL OR FLOOR - 12" O.C.
      b. TWO ANGLE INSTALLATIONS - 8" O.C.
      c. PROVIDE A MIN. OF (2) FASTENERS ON EACH SIDE, TOP & BOTTOM.
6. ALTERNATE METHOD FOR BREAK-AWAY CONNECTIONS: MAY BE FLANGED CONNECTION SYSTEMS SIMILAR TO DUCTMATE, NEXUS OR WARD WHEN INSTALLED PER THE MANUFACTURER'S INSTALLATION INSTRUCTIONS, IN ACCORDANCE WITH THE ASSEMBLIES UL APPROVAL.
7. THE MECH. CONTRACTOR SHALL COORDINATE THE REQUIREMENT OF MULTIPLE SECTION DAMPER ASSEMBLIES BASED ON DAMPER LIMITATIONS. PROVIDE NECESSARY REINFORCING STRUCTURE FOR ALL MULTIPLE SECTION DAMPER ASSEMBLIES IN ACCORDANCE WITH THE MANUFACTURER'S WRITTEN INSTALLATION INSTRUCTIONS.
8. DO NOT INSTALL ANY FIRESTOPPING MATERIALS OF ANY KIND IN THE ANNULAR SPACE BETWEEN THE DAMPER SLEEVE AND THE WALL.

5 VERTICAL FIRE DAMPER
NOT TO SCALE

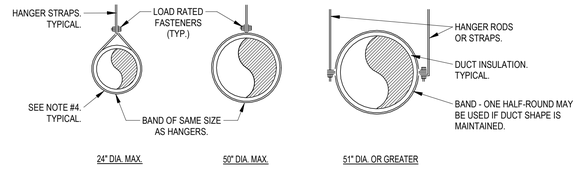

DUCT DIA.	ROD DIA.	STRAP	MAXIMUM SPACING
UP TO 10"	1/4"	1" x 22 GA.	12'-0" O.C.
11" - 18"	1/4"	1" x 22 GA.	12'-0" O.C.
19" - 24"	1/4"	1" x 22 GA.	12'-0" O.C.
25" - 36"	3/8"	1" x 20 GA.	12'-0" O.C.
37" - 50"	(2) 3/8"	(2) 1" x 20 GA.	12'-0" O.C.
51" - 60"	(2) 3/8"	(2) 1" x 18 GA.	12'-0" O.C.
61" - 84"	(2) 3/8"	(2) 1" x 16 GA.	12'-0" O.C.

NOTES:
1. HANGERS MUST NOT DEFORM DUCT SHAPE.
2. STRAPS AND RODS SHALL BE GALV. STEEL. REFER TO "RECTANGULAR DUCT SUPPORT DETAIL" FOR ATTACHING DUCTWORK TO THE BUILDING STRUCTURE.
3. WHERE HANGERS ARE INSTALLED UNDER THE INSULATION AND PENETRATE THROUGH THE INSULATION, SEAL ALL PENETRATIONS WITH APPROVED SEALING MASTIC. BUILD-UP MASTIC ON THE HANGER AT BASE (PENETRATION) AND EXTEND AND TAPER UP THE HANGER TO A MIN. OF 6".

3 ROUND DUCT SUPPORT
NOT TO SCALE

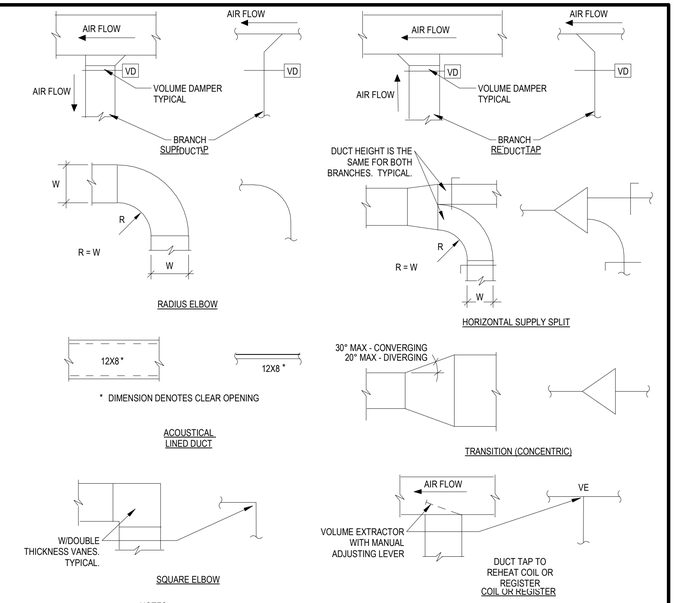

NOTES:
1. SPECIFICATIONS EXCEED SMACNA STANDARDS IN SOME INSTANCES.
2. SMACNA SHALL BE CONSIDERED THE MINIMUM STANDARD UNLESS OTHERWISE INDICATED.

1 RECTANGULAR DUCT CONSTRUCTION
NOT TO SCALE

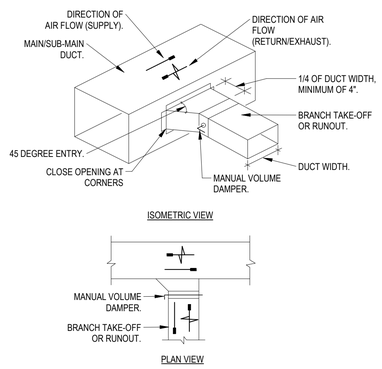

NOTE:
ALL INSULATED SUPPLY AND RETURN DUCTWORK SHALL BE FURNISHED AND INSTALLED WITH STAND-OFF MOUNTING BRACKETS FOR VOLUME/BALANCING DAMPER OPERATORS. ALLOW CLEARANCE BETWEEN DUCT AND OPERATOR OF NOT LESS THAN INSULATION THICKNESS.

6 DUCT TAKE OFF DETAIL
NOT TO SCALE

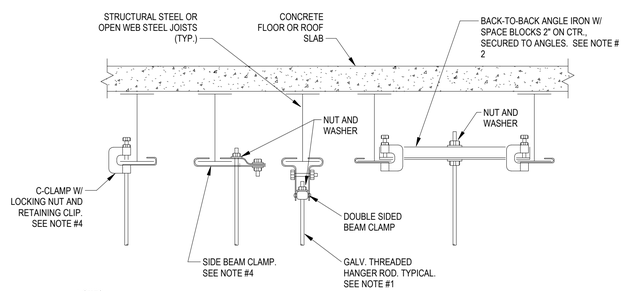

NOTES:
1. FOR CEILING SUSPENDED EQUIPMENT PROVIDE MIN. 3/8" DIA. HANGER ROD (REFER TO MANUFACTURERS INSTALLATION INSTRUCTIONS).
2. FOR PIPES UNDER 2" USE A SINGLE 1-1/2"x1-1/2"x1/4" ANGLE IRON WITH C-CLAMP. FOR PIPES 2-1/2" AND LARGER USE 3"x3"x1/4" ANGLE IRON BACK TO BACK AS SHOWN.
3. REPAIR OF FIREPROOFING IN ORDER TO FACILITATE THE INSTALLATION OF HANGER RODS IN EXISTING CONSTRUCTION SHALL BE BY THE G.C.
4. USE OF C-CLAMPS AND SIDE BEAM CLAMPS IS LIMITED TO PIPING 2-1/2" AND UNDER.

4 TYPICAL METHOD OF SECURING HANGER RODS TO STRUCTURAL STEEL
NOT TO SCALE

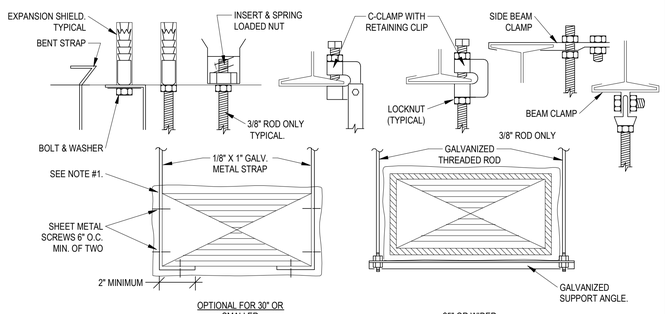

DUCT WIDTH	ROD DIA.	SUPPORT ANGLE OR EQUIV. CHANNEL	MAXIMUM SPACING	MAXIMUM AREA *
UP TO 30"	3/8"	1 1/2" X 1 1/2" X 1/8"	8'-0" O.C.	4 SQ. FT.
31" TO 42"	3/8"	1 1/2" X 1 1/2" X 1/8"	6'-0" O.C.	10 SQ. FT.
43" TO 60"	1/2"	1 1/2" X 1 1/2" X 1/8"	6'-0" O.C.	10 SQ. FT.
61" TO 84"	1/2"	2" X 2" X 1/4"	4'-0" O.C.	--------
85" AND UP	1/2"	2" X 2" X 1/4"	4'-0" O.C.	--------

* REDUCE SPACING TO NEXT SMALLER INTERVAL IF DUCT AREA EXCEEDS MAXIMUM.

NOTES:
1. HANGERS MUST NOT DEFORM DUCT SHAPE.
2. STRAPS AND RODS SHALL BE GALV. STEEL.
3. WHERE HANGERS ARE INSTALLED UNDER THE INSULATION AND PENETRATE THROUGH THE INSULATION, SEAL ALL PENETRATIONS WITH APPROVED SEALING MASTIC. BUILD-UP MASTIC AT BASE (PENETRATION) AND EXTEND AND TAPER BEYOND PENETRATION TO A MIN. OF 6".

2 RECTANGULAR DUCT SUPPORT
NOT TO SCALE

Architecture
Engineering
Environmental
Land Surveying
BL Companies

355 Research Parkway
Meriden, CT 06450
(203) 630-1406
(203) 630-2615 Fax

JESSE E. VOSE
No. 15,000
REGISTERED
PROFESSIONAL ENGINEER
MECHANICAL

PAWTUCKET-CENTRAL FALLS TRANSIT CENTER
300 PINE STREET PAWTUCKET, RI

REVISIONS

NO	DATE	DESCRIPTION

Designed:	PMS
Drawn:	PMS
Reviewed:	JV
Project No.:	2301115
Date:	04/09/2024

Issued for:
CONSTRUCTION DOCUMENTS

Title:
MECHANICAL DETAILS

Sheet No.
M501

4/4/2024 1:58:41 PM C:\Users\pmscofield\Documents\2301115_RIPTA_PassengerFacility_R23_MEP_pmscofield4GXCV.rvt

© 2022 BL COMPANIES, INC. THESE DRAWINGS SHALL NOT BE UTILIZED BY ANY PERSON, FIRM OR CORPORATION WITHOUT THE SPECIFIC WRITTEN PERMISSION OF BL COMPANIES.

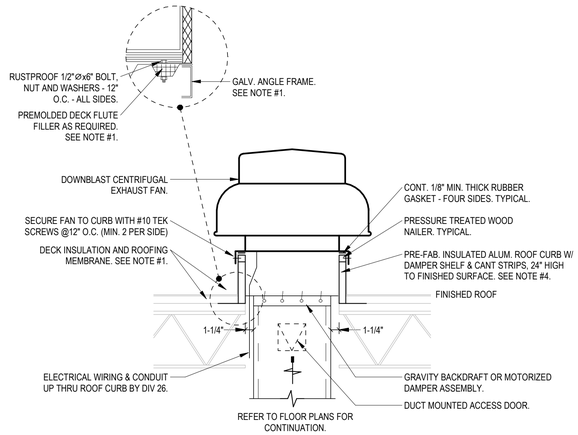

NOTES:
1. REFER TO ARCHITECTURAL AND STRUCTURAL DRAWINGS FOR THE EXACT ROOF CONSTRUCTION AND ADDITIONAL INFORMATION.
2. PROVIDE A FACTORY MTD & WIRED, WEATHERPROOF, NON-FUSED DISCONNECT BY THE FAN MANUFACTURER.
3. PROVIDE ACOUSTICAL LINING FOR A MINIMUM OF 20'-0" UPSTREAM OF THE EXHAUST FAN. WHERE THE NEAREST EXHAUST INTAKE INTO THE DUCT MAIN IS WITHIN 20'-0' OF THE EXHAUST FAN INLET, PROVIDE A SOUND ATTENUATING CURB OR A SOUND ATTENUATING EXTENSION TO THE PRE-FAB ROOF CURB. THE MECHANICAL CONTRACTOR SHALL COORDINATE ALL REQUIREMENTS.
4. WHEN THE FAN IS TO BE INSTALLED ON A PITCHED ROOF, THE MECHANICAL CONTRACTOR SHALL COORDINATE WITH THE CURB MANUFACTURER TO PROVIDE A PITCHED CURB TO MATCH THE PITCH OF THE ROOF. THE EXHAUST FAN SHALL BE INSTALLED LEVEL AND PLUMB.

5 CENTRIF DOWNBLAST EXHAUST FAN INSTALLATION
12" = 1'-0"

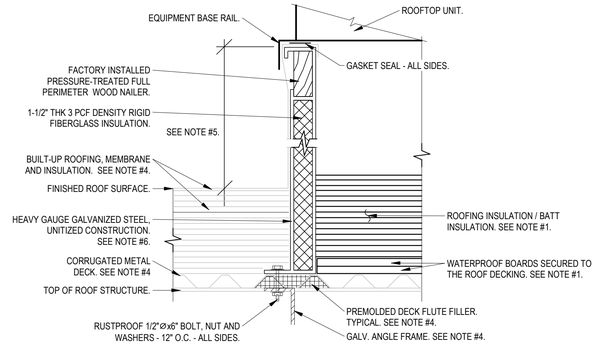

NOTES:
1. PROVIDE (2) LAYERS OF 1/2" THICK WATERPROOF BOARD BY THE MECHANICAL CONTRACTOR AND ROOFING INSULATION BY THE ROOFING CONTRACTOR. RUN ALTERNATING LAYERS OF WATERPROOF BOARDS PERPENDICULAR TO THE PREVIOUS LAYER. PROVIDE 100% AREA COVERAGE OF THE ROOF CURB CAVITY. WHERE THE ROOF CURB IS PROVIDED FOR A RETROFIT APPLICATION, THE MECHANICAL CONTRACTOR SHALL PROVIDE A MIN. OF (2) LAYERS OF 12" THICK FIBERGLASS BATT INSULATION INSTALLED ABOVE THE WATERPROOF BOARDS AS INDICATED ABOVE, IN LIEU OF THE ROOFING INSULATION.
2. THE ROOFTOP AIR HANDLING UNIT SHALL BE FULLY SUPPORTED AROUND THE UNIT'S PERIMETER. COORDINATE MATCHING CURBS TO SUPPORT ANY UNIT ACCESSORIES (I.E. PIPING VESTIBULES, ETC.).
3. THE ROOFTOP AIR HANDLING UNIT SHALL BE MOUNTED, PLUMB AND LEVEL, ON THE ROOF CURB. THE TOP OF THE CURB SHALL BE LEVEL AND THE SLOPE OF THE ROOF SHALL BE COMPENSATED FOR BY THE CURB. THE USE OF BLOCKING OR SHIMMING UNDER THE ROOF CURB IS NOT ACCEPTABLE. PROVIDE ALL COMPONENTS REQUIRED TO INSTALL THE ROOF CURB IN ACCORDANCE WITH THE MANUFACTURER'S WRITTEN INSTALLATION INSTRUCTION, UNLESS OTHERWISE NOTED.
4. REFER TO ARCHITECTURAL AND STRUCTURAL DRAWINGS FOR EXACT ROOF CONSTRUCTION AND ADDITIONAL INFORMATION.
5. CURB HEIGHT SHALL BE A MIN. OF 24", UNLESS OTHERWISE INDICATED, AS MEASURED FROM THE TOP OF ROOF DECK HIGH POINT TO THE TOP OF THE CURB, AND/OR AS REQUIRED FOR NO LESS THAN 8" OF CURB HEIGHT ABOVE THE FINISHED ROOF SURFACE. COORDINATE WITH THE ROOF SYSTEM USED SO THAT A MINIMUM OF 8" OF THE CURB IS ABOVE THE FINISHED ROOF SURFACE FOR FLASHING PURPOSES.
6. ALL CORNERS SHALL BE FULLY MITERED AND WELDED. CURB SHALL BE FURNISHED WITH ATTACHMENT/RESTRAINT BRACKETS, ALL WALL, CORNER AND CROSS BRACE SPLICES, ALONG WITH ASSEMBLY HARDWARE. COORDINATE CURB FULLY ASSEMBLED OR KNOCKED DOWN.
7. WHEN THE PROJECT IS LOCATED WITHIN 5 MILES OF A SEA COAST, CURBS SHALL BE OF ALUMINUM CONSTRUCTION.
8. PROVIDE RESTRAINT BRACKETS SIMILAR TO BE AES INDUSTRIES MODEL AWS OR EQUAL. RESTRAINT BRACKETS UTILIZED TO SECURE ROOFTOP AIR CONDITIONERS SHALL BE DESIGNED FOR WIND LOADS PER LOCAL STATE BUILDING CODES. STRUCTURAL WIND LOAD CALCULATIONS AND/OR STATE NOTICE OF ACCEPTANCE SHALL BE AVAILABLE FROM THE MANUFACTURER. RESTRAINT BRACKET QUANTITY TO BE DETERMINED BY PROJECT SPECIFIC CALCULATIONS. AT A MINIMUM, PROVIDE 4 BRACKETS PER CURB, ONE BRACKET PER SIDE. RESTRAINT BRACKETS SHALL BE ATTACHED TO ROOF CURB AND THE EQUIPMENT BASE RAIL IN ACCORDANCE WITH THE BRACKET MANUFACTURER'S WRITTEN INSTALLATION INSTRUCTIONS.

3 ROOFTOP AHU CURB
NOT TO SCALE

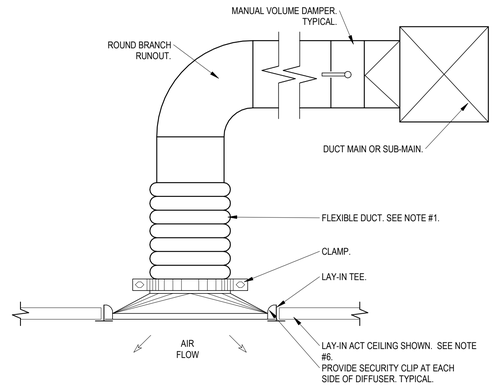

NOTES:
1. FLEX DUCTWORK SHALL BE A MAXIMUM OF 6 L.F.
2. IN AREAS WITH GYPSUM BOARD CEILINGS, NO FLEXIBLE DUCTWORK SHALL BE PERMITTED.
3. PROVIDE AN OPPOSED BLADE DAMPER FOR ALL AIR DEVICES. REFER TO AIR DEVICE SCHEDULE.
4. CEILING DIFFUSERS SHALL BE 4-WAY, UON.
5. PROVIDE INSULATED BLANKET ON TOP OF DIFFUSER.
6. REFER TO THE AIR DEVICE SCHEDULE FOR MOUNTING TYPE. COORDINATE CEILING TYPE WITH THE ARCH. REFLECTED CEILING PLANS.

1 CEILING DIFFUSER
NOT TO SCALE

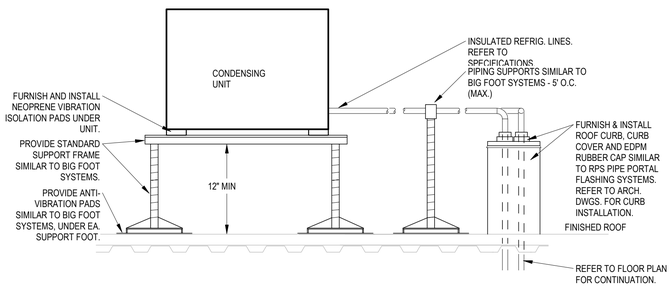

NOTES:
1. CONTRACTOR SHALL PROVIDE MANUFACTURER DESIGNED EQUIPMENT SUPPORT SYSTEM FOR SUBMITTAL REVIEW.
2. FURNISH & INSTALL REFRIGERANT PIPING FROM CONDENSING UNIT TO INDOOR FAN COILS. NOTE THAT CONTRACTOR SHALL PRESSURE TEST THE REFRIGERANT PIPING WITH NITROGEN AT A PRESSURE & TIME RECOMMENDED BY MANUFACTURER & INDUSTRY PRACTICE TO ASSURE ALL PIPING IS FREE OF LEAKS.

6 CONDENSING UNIT ARRANGEMENT - ROOF
NOT TO SCALE

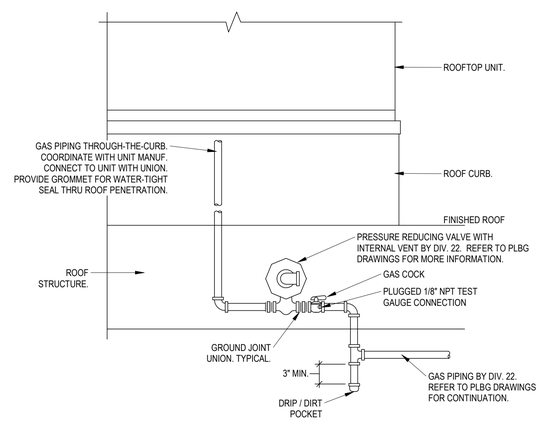

4 ROOFTOP UNIT GAS PIPING CONNECTION WITH PRV-INTERIOR
NOT TO SCALE

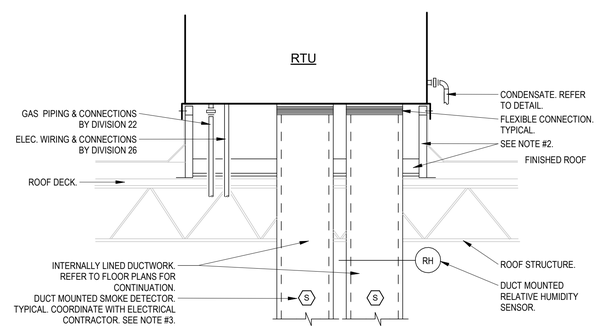

NOTES:
1. COORDINATE WITH ARCH. & STRUCT. DWGS FOR EXACT ROOF CONSTRUCTION AND ADDITIONAL INFORMATION.
2. REFER TO ROOFTOP UNIT CURB DETAIL FOR ADDITIONAL INFORMATION.
3. PROVIDE DUCT SMOKE DETECTORS FOR UNITS THAT ARE 2,000 CFM OR GREATER. INSTALL IN STRICT ACCORDANCE WITH THE MANUFACTURER'S INSTALLATION INSTRUCTIONS.

2 ROOFTOP UNIT INSTALLATION
NOT TO SCALE

Architecture
Engineering
Environmental
Land Surveying
BL Companies
355 Research Parkway
Meriden, CT 06450
(203) 630-1406
(203) 630-2615 Fax

JESSE E. VOSE
No. 17
REGISTERED
PROFESSIONAL ENGINEER
MECHANICAL

PAWTUCKET-CENTRAL FALLS TRANSIT CENTER
300 PINE STREET PAWTUCKET, RI

REVISIONS

NO	DATE	DESCRIPTION

Designed:	PMS
Drawn:	PMS
Reviewed:	JV
Project No.:	2301115
Date:	04/09/2024
Issued for:	CONSTRUCTION DOCUMENTS

Title: MECHANICAL DETAILS

Sheet No. M502

4/4/2024 1:58:41 PM C:\Users\pmscofield\Documents\2301115_RIPTA_PassengerFacility_R23_MEP_pmscofield4GXCV.rvt

© 2022 BL COMPANIES, INC. THESE DRAWINGS SHALL NOT BE UTILIZED BY ANY PERSON, FIRM OR CORPORATION WITHOUT THE SPECIFIC WRITTEN PERMISSION OF BL COMPANIES.

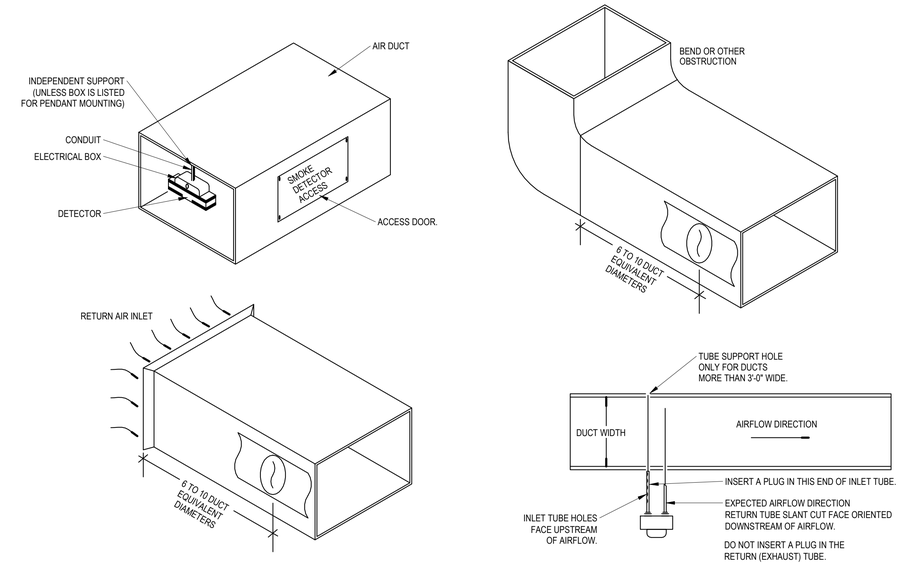

NOTES:
1. INSTALL DETECTORS IN STRICT ACCORDANCE WITH MANUFACTURER'S INSTALLATION INSTRUCTIONS.
2. DETECTORS MOUNTED IN AIRSTREAM TO BE UL LISTED FOR PLENUM USE.
3. CONTRACTOR TO FIND MOST IDEAL LOCATION FOR DUCT SMOKE DETECTOR MOUNTING.
4. MULTIPLE DUCT SMOKE DETECTORS MAYBE REQUIRED IF DUCT BRANCHES OFF PRIOR TO INSTALLATION LOCATION.

1 DUCT MOUNTED SMOKE DETECTOR INSTALLATION
NOT TO SCALE

Architecture
Engineering
Environmental
Land Surveying
BL Companies
355 Research Parkway
Meriden, CT 06450
(203) 630-1406
(203) 630-2615 Fax

JESSE E. VOSE
No.
REGISTERED
PROFESSIONAL ENGINEER
MECHANICAL

PAWTUCKET-CENTRAL FALLS TRANSIT CENTER
300 PINE STREET PAWTUCKET, RI

REVISIONS

NO	DATE	DESCRIPTION

Designed: PMS
Drawn: PMS
Reviewed: JV
Project No.: 2301115
Date: 04/09/2024
Issued for:
CONSTRUCTION DOCUMENTS

Title:
MECHANICAL DETAILS

Sheet No.
M503

4/4/2024 1:58:42 PM C:\Users\pmscofield\Documents\2301115_RIPTA_PassengerFacility_R23_MEP_pmscofield4GXCV.rvt

© 2022 BL COMPANIES, INC. THESE DRAWINGS SHALL NOT BE UTILIZED BY ANY PERSON, FIRM OR CORPORATION WITHOUT THE SPECIFIC WRITTEN PERMISSION OF BL COMPANIES.

ROOF TOP UNITS

MARK	MANUFACTURER	MODEL	AREA SERVED	REFRIG. TYPE	NOMINAL TONS	ESP (IN WC)	AIRFLOW DATA (CFM)					COOLING DATA				HEATING DATA				GAS DATA				EER / SEER / IEER	UNIT ELEC DATA				WEIGHT (LBS)	REMARKS
							SUPPLY	RETURN TO UNIT	RETURN TO COIL	EXH / RELIEF	OUTSIDE	AMBIENT TEMP. (°F)	TOTAL CAPACITY (MBH)	SENSIBLE CAPACITY (MBH)	STAGES	AMBIENT TEMP. (°F)	INPUT (MBH)	OUTPUT (MBH)	STAGE S	TYPE	INPUT (MBH)	GAS PRESS. (IN WC) (MIN./MAX.)	GAS CONN. (IN)		VOLTS	PHASE	MCA	MOP		
RTU-1	TRANE	YZC120F3RZA	FIRST FLOOR	R-410	10	0.5	4,100	3,380	3,300	80	800	95	112	98	VARIABLE	0	250	200	2	NATURAL	250	4.5/14	3/4"	12.1 / 23 / 23	208	3	53	80	1250	ALL

REMARKS:
1. INSTALL IN ACCORDANCE WITH MANUF. INSTALLATION INSTRUCTIONS.
2. INSTALL ALL SHIPPED LOOSE ITEMS IN ACCORDANCE WITH MANUF. INSTALLATION INSTRUCTIONS.
3. MOTORS SHALL MEET THE MOTOR EFFICIENCY REQUIREMENTS SET FORTH IN ANSI/ASHRAE/IES STANDARD 90.1
4. NAMEPLATE SHALL INCLUDE UNIT DESIGNATION AND AREA SERVED BY THE UNIT.
5. FOR UNITS MOUNTED ON THE ROOF, THE UNIT SHALL BE MOUNTED ON A 24" HIGH PRE-FAB CURB, LEVEL AND PLUMB. COORDINATE WITH THE ARCHITECTURAL DWGS TO DETERMINE THE ROOF PITCH TO ACCOMMODATE MOUNTING REQUIREMENTS.
6. PROVIDE FACTORY, MOUNTED & WIRED, BACNET PROTOCOL CONTROLS W/ INTERFACE FOR FULL MONITORING & CONTROL BY THE CENTRAL BMS.
7. SYSTEM SHALL OPERATE AS A SINGLE ZONE, VARIABLE AIR VOLUME UNIT. UNIT SHALL BE IN A DOWNFLOW CONFIGURATION, UON.
8. SYSTEM SHALL OPERATE AS A MULTIZONE VARIABLE AIR VOLUME UNIT. UNIT SHALL BE A DOWNFLOW CONFIGURATION, UON.
9. PROVIDE WITH FULLY MODULATING, 100%, INTEGRATED, COMPARATIVE ENTHALPY ECONOMIZER WITH LOW LEAK BAROMETRIC RELIEF W/ FAULT DETECTION & DIAGNOSTICS.
10. PROVIDE WITH DEMAND CONTROL VENTILATION, INCLUDING DUCT MOUNTED CO2 SENSORS FOR FIELD INSTALLATION.
11. PROVIDE WITH COMPRESSOR ANTI-RECYCLE CONTROLS, AND MODULATING/STAGED COOLING AND HEATING CONTROLS.
12. PROVIDE SINGLE POINT POWER CONNECTION, THROUGH BASE (ELEC / GAS), NON-FUSED DISCONNECT, INTERNAL LIGHTS W/ SWITCHES, AND SHIPPED LOOSE GFCI CONVENIENCE OUTLET FOR FIELD INSTALLATION.
13. PROVIDE DEHUMIDIFICATION CONTROLS W/ MODULATING HGRH, INCLUDING DUCT MOUNTED RH SENSORS FOR FIELD INSTALLATION & SPACE RH SENSORS. SEE PLANS.
14. PROVIDE THE FOLLOWING: 5000 HRS SALT SPRAY FINISH, CONDENSER COIL CORROSION PROTECTION, STAINLESS STEEL HEAT EXCHANGER AND BURNERS, HINGED ACCESS PANELS, MERV 13 - 2" THICK FILTERS, HAIL GUARDS, AND CLOGGED FILTER & CONDENSATE OVERFLOW CONTROLS.
15. SELECTIONS SCHEDULED ARE BASIS OF DESIGN, APPROVED EQUAL PRODUCTS BY CARRIER, LENNOX. OR JOHNSON CONTROLS, PROVIDED THEY MEET OR EXCEED THE BASIS OF DESIGN PERFORMANCE AND SPECIFICATIONS.

INDOOR AIR-CONDITIONING UNITS

MARK	ASSOCIATED UNIT	MANUFACTURER	MODEL	AREA SERVED	ARRANGEMENT	REFRIG. TYPE	AIRFLOW (CFM @ HIGH)	DESIGN COOLING OUTDOOR TEMP. (DB °F)	COOLING CAPACITY (BTUH)	COOLING EFFICIENCY (EER / SEER)	DESIGN HEATING OUTDOOR TEMP. (DB °F)	HEATING CAPACITY (BTUH)	HEATING EFFICIENCY (COP)	ELEC DATA				WEIGHT (LBS)	REMARKS
														VOLTS	PHASE	MCA	MOP		
AC-1	CU-1	TRANE MITSUBISHI	TPKA0A012	IT CL 109	WALL SURFACE	R410A	455	95	12000	13.3 / 21	-	-	-	208	1	1	0	30	ALL

REMARKS:
1. THE TOTAL RUNS OF REFRIGERANT PIPING WILL BE BASED ON MANUFACTURERS APPLICATION DATA AND SHALL NOT COMPROMISE WARRANTY PERIOD. PROVIDE REFRIGERANT SIDE ACCESSORIES AS RECOMMENDED BY THE MANUFACTURER. INSULATE REFRIG. LINES, RL & RS, IN ACCORDANCE WITH UNIT MANUF. INSTALLATION INSTRUCTIONS. INSTALLING CONTRACTOR MUST VERIFY ACTUAL PIPING LENGTHS AND UPDATE SELECTION FILE AS NECESSARY TO CHECK FOR ERRORS AND CALCULATE CORRECT ADDITIONAL REFRIGERANT CHARGE.
2. PROVIDE AN INTELLIGENT COMMUNICATIONS AND MONITORING CONTROL SYSTEM INDEPENDENT OF THE MAIN BUILDING BMS THAT INCORPORATES THE FOLLOWING; 7-DAY PROGRAMMABLE CONTROLLER WITH AUTO CHANGEOVER, LEAD/LAG FUNCTION, UNIT TO UNIT COMMUNICATION, A WIRED WALL MOUNTED GRAPHICAL DISPLAY CONTROL PANEL AND A BACNET INTERFACE TO THE CENTRAL BMS SYSTEM.
3. INDOOR UNITS (ACs) ARE POWERED FROM THEIR RESPECTIVE OUTDOOR UNITS (CUs). PROVIDE ALL WIRING, LINE & LOW VOLTAGE BETWEEN UNITS AS REQUIRED PER MANUF. INSTALLATION INSTRUCTIONS.
4. PROVIDE WITH MATCHING MINI CONDENSATE PUMP

OUTDOOR AIR-COOLED CONDENSING UNITS

MARK	ASSOCIATED UNIT	MANUFACTURER	MODEL	REFRIG. TYPE	DESIGN COOLING OUTDOOR TEMP. (DB °F)	COOLING CAPACITY (BTUH)	COOLING EFFICIENCY (EER / SEER)	DESIGN HEATING OUTDOOR TEMP. (DB °F)	HEATING CAPACITY (BTUH)	HEATING EFFICIENCY (COP)	ELEC DATA				WEIGHT (LBS)	REMARKS
											VOLTS	PHASE	MCA	MOP		
CU-1	AC-1	TRANE MITSUBISHI	TRUYA012	R410A	95	12000	13.3 / 21	-	-	-	208	1	11.0	28	95	ALL

REMARKS:
1. PROVIDE CONTROLS INTERFACE.
2. PROVIDE WITH HAIL GUARD, WIND BAFFLE AND EQUIPMENT STAND.

FANS

MARK	MANUFACTURER	MODEL	AREA SERVED	TYPE	DRIVE TYPE	AIRFLOW (CFM)	ESP (IN WC)	FAN RPM	ELEC DATA			SONES	WEIGHT (LBS)	REMARKS
									HP	VOLTS	PHASE			
EF-1	GREENHECK	G-090-VG	CENTRAL TOILET EXH	CENTRIF. DOWNBLAST	DIRECT	640	0.375 / 0.46	1725	1/10	115	1	8.8	70	1,2,3,4,5,6,7
TF-1	GREENHECK	SQ-9-VG	UTILITIES CL 110	INLINE	DIRECT	900	0.25 / 0.33	1385	1/4	115	1	4.7	65	1,2,3,4,5,6,8

REMARKS:
1. INSTALL IN ACCORDANCE WITH MANUF. INSTALLATION INSTRUCTIONS.
2. INSTALL ALL SHIPPED LOOSE ITEMS IN ACCORDANCE WITH MANUF. INSTALLATION INSTRUCTIONS.
3. COORDINATE THE PITCH REQUIRED FOR THE ROOF CURB.
4. NAMEPLATE SHALL INCLUDE FAN DESIGNATION AND AREA SERVED BY FAN.
5. MOTOR SHALL MEETS THE MOTOR EFFICIENCY REQUIREMENTS SET FORTH IN ANSI/ASHRAE/IES STANDARD 90.1
6. FIRST # IS EXTERNAL DUCT SP / SECOND # IS TOTAL SP. FAN SELECTION BASED ON THE TOTAL SP WHICH IS ANY EXTERNAL DUCTWORK AND MANUF. FAN ACCESSORIES (I.E. DAMPERS, WEATHERHOODS, ETC...).
7. PROVIDE THE FOLLOWING: UL-705, HIGH WIND RATED, EC MOTOR W/ MTD & WIRED SPEED CONTROL FOR BALANCING, NEMA-1 TOGGLE TYPE DISCONNECT SWITCH, JUNCTION BOX MOUNTED & WIRED, TIE DOWN POINTS, INSULATED PRE-FAB CURB, HINGED CURB CAP W/ CABLES, FOAM SEAL, GRAVITY DAMPER, HOOD HASPS, INTERNAL GENERAL WIRING PIGTAIL,ALUM. BIRD SCREEN AND COMPOSITE WHEEL.
8. PROVIDE THE FOLLOWING: MOTOR W/ THERMAL OVERLOAD, UL-705, EC MOTOR, SOLID STATE SPEED CONTROL MTD ON EXTERIOR OF FAN HOUSING, NEMA-1 TOGGLE TYPE DISCONNECT SWITCH, JUNCTION BOX MOUNTED & WIRED, HANGING KIT W/ SPRING ISOLATION & BRACKETS - SHIPPED LOOSE & COMPOSITE WHEEL.

ELECTRIC UNIT HEATERS

MARK	MANUFACTURER	MODEL	LOCATION	MOUNTING TYPE	UNIT LENGHT (IN)	AIRFLOW (CFM)	HEATING STAGES	ELEC DATA				WEIGHT (LBS)	REMARKS
								KW	AMPS	VOLTS	PHASE		
EWH-1	QMARK	AWH4404F	UTILITIES CL 110	SEE FLOOR PLANS	15-3/4"	100	1	1.5	7.2	208	1	25	1,2,3,5,7
EWH-2	QMARK	AWH4404F	VEST. 101	SEE FLOOR PLANS	15-3/4"	100	1	1.5	7.2	208	1	25	1,2,3,4,7
EWH-3	QMARK	AWH4404F	WATER RM 114	SEE FLOOR PLANS	15-3/4"	100	1	1.5	7.2	208	1	25	1,2,3,5,7

REMARKS:
1. INSTALL IN STRICT ACCORDANCE WITH MANUF. INSTALLATION INSTRUCTIONS AND RECOMMENDATIONS.
2. COLOR TO BE WHITE.
3. PROVIDE TOGGLE TYPE DISCONNECT SWITCH, AUTOMATIC FAN DELAY, MANUAL RESET THERMAL OVERLOAD, AND INTEGRAL TAMPERPROOF THERMOSTAT.
4. PROVIDE RECESS ENCLOSURE, AND TRIM KIT.
5. PROVIDE SURFACE MOUNTING FRAME PAINTED TO MATCH HEATER.
6. PROVIDE WALL MOUNTING BRACKET, TOGGLE TYPE DISCONNECT SWITCH, AUTOMATIC FAN DELAY, MANUAL RESET THERMAL OVERLOAD, AND INTEGRAL TAMPERPROOF THERMOSTAT.
7. PROVIDE A BMS INTERFACE FOR COMPLETE REMOTE MONITORING & CONTROL.

AIR DEVICE

MARK	MANUFACTURER	MODEL	SERVICE	MATERIAL	MOUNTING TYPE	MAX NC LEVEL	COLOR	SIZE		DAMPER	REMARKS
								FACE	NECK		
A	TITUS	TMS-AA	SUPPLY	ALUMINUM	LAY IN / FULL FACE	30	WHITE	24X24	SEE TAG	OBD	1,2,6,9
B	TITUS	350FL	RETURN	ALUMINUM	LAY IN / PANEL	30	WHITE	-	SEE TAG	OBD	3,9
C	TITUS	350FL	EXHAUST	ALUMINUM	LAY IN / PANEL	30	WHITE	-	SEE TAG	OBD	3,9
D	TITUS	TMS-AA	SUPPLY	ALUMINUM	LAY IN / PANEL	30	WHITE	12X12	SEE TAG	OBD	1,3,6,9
E	TITUS	300FL	SUPPLY	ALUMINUM	SURFACE - WALL	30	WHITE	-	SEE TAG	OBD	5,9
F	TITUS	350FL	RETURN	ALUMINUM	SURFACE	30	WHITE	-	SEE TAG	OBD	5,9

REMARKS:
1. SEE DIFFUSER CONNECTION DETAIL.
2. TYPE #3, FULL FACE, (GRID MOUNTING).
3. TYPE #3, PANEL MOUNTED. (GRID MOUNTING).
4. TYPE #3, PANEL MOUNTED, PROVIDE #TRM MOUNTING FRAME FOR SURFACE MOUNTING.
5. TYPE #1, WHERE APPLICABLE - CONCEALED FASTENERS, (SURFACE MOUNTING).
6. PROVIDE MOLDED INSULATION BLANKET (R-6) FOR THE CEILING DIFFUSER.
7. PROVIDE WITH AIR SCOOP & FULL PERIMETER GASKET.
8. NO CEILINGS. RGDS TO BE RIGIDLY SECURED TO DUCT RUNOUTS. NO FLEX DUCTWORK TO DIFFUSERS. SUSPEND RGDS AT A HEIGHT TO BE COORDINATED WITH THE FACE OF SUSPENDED LIGHTING.
9. SELECTIONS SCHEDULED ARE BASIS OF DESIGN, APPROVED EQUAL PRODUCTS BY METALAIRE OR PRICE, PROVIDED THEY MEET OR EXCEED THE BASIS OF DESIGN PERFORMANCE AND SPECIFICATIONS.

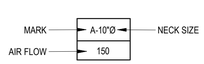

Architecture Engineering Environmental Land Surveying
BL Companies
355 Research Parkway
Meriden, CT 06450
(203) 630-1406
(203) 630-2615 Fax

JESSE E. VOSE
No.
REGISTERED PROFESSIONAL ENGINEER MECHANICAL

PAWTUCKET-CENTRAL FALLS TRANSIT CENTER
300 PINE STREET PAWTUCKET, RI

REVISIONS

NO	DATE	DESCRIPTION

Designed: PMS
Drawn: PMS
Reviewed: JV
Project No.: 2301115
Date: 04/09/2024
Issued for: CONSTRUCTION DOCUMENTS

Title: MECHANICAL SCHEDULES

Sheet No. M601

4/4/2024 1:58:44 PM C:\Users\pmscofield\Documents\2301115_RIPTA_PassengerFacility_R23_MEP_pmscofield4GXCV.rvt

© 2022 BL COMPANIES, INC. THESE DRAWINGS SHALL NOT BE UTILIZED BY ANY PERSON, FIRM OR CORPORATION WITHOUT THE SPECIFIC WRITTEN PERMISSION OF BL COMPANIES.

CONTROLS SYMBOL LIST

SYMBOL	DESCRIPTION	SYMBOL	DESCRIPTION
	HEATING (OR COOLING) COIL		PRESSURE GAUGE
	OPPOSED BLADE DAMPER	RA	REVERSE ACTING
	FAN (OR PUMP)	DA	DIRECT ACTING
	MANUAL 2-WAY VALVE	NO	NORMALLY OPEN
	AUTOMATIC, MODULATING 2-WAY VALVE	NC	NORMALLY CLOSED
	AUTOMATIC, MODULATING 3-WAY VALVE	M	ELECTRIC MOTOR
100	AUTOMATIC FLOW CONTROL VALVE. NUMBER DENOTES GPM SETTING.	MS	MOTOR STARTER
	MANUAL BUTTERFLY VALVE	VS	VARIABLE SPEED DRIVE UNIT
	AUTOMATIC, 2-POSITION BUTTERFLY VALVE	SD	SMOKE DETECTOR W/ INTERLOCK
	CHECK VALVE	DI	DDC DIGITAL INPUT POINT
	WYE STRAINERW/ HOSE END BLOW DOWN VA.	DO	DDC DIGITAL OUTPUT POINT
T	ROOM TEMPERATURE SENSOR	AI	DDC ANALOG INPUT POINT
H	ROOM HUMIDITY TRANSMITTER	AO	DDC ANALOG OUTPUT POINT
P	PRESSURE SWITCH	CSS	CURRENT SENSING SWITCH
A	ALARM SIGNAL	AFMS	AIRFLOW MEASURING STATION
P#	DUCT/PIPE PRESSURE TRANSMITTER	ES	END SWITCH W/ INTERLOCK
T#	DUCT/PIPE TEMPERATURE SENSOR	FS	LOW TEMPERATURE FREEZESTAT
H#	DUCT HUMIDITY TRANSMITTER	ESS	EMERGENCY SHUTDOWN SWITCH
BM-#	BTUH METER	CO2	DUCT CARBON DIOXIDE SENSOR
FM	WATER FLOW METER		

NOTES:
1. REFER TO DRAWING M0.01 FOR STANDARD SYMBOLS AND ABBREVIATIONS.

ATC GENERAL NOTES:
1. EQUIPMENT DIAGRAM IS FOR GENERAL ARRANGEMENT ONLY. ACTUAL LAYOUT AND CONFIGURATION MAY DIFFER. COORDINATE ALL UTILITY CONNECTIONS AND CONTROL INTERFACES WITH THE UNIT MANUFACTURER. REFER TO RESPECTIVE DETAILS AND SPECIFICATIONS FOR ADDITIONAL INFORMATION.
2. THE ATC CONTRACTOR SHALL COORDINATE WITH THE MECHANICAL CONTRACTOR TO PROVIDE AN INTERFACE FOR FULL INTEGRATION BETWEEN THE ATC AND THE PACKAGED EQUIPMENT CONTROL PANEL. PROVIDE AS A MINIMUM: START/STOP, MONITORING OF RUN STATUS, ALARMS, TEMPERATURE RESET, ETC... REFER TO SEQUENCE OF OPERATIONS FOR ANY ADDITIONAL REQUIREMENTS. THE ATC CONTRACTOR SHALL PROVIDE ALL NEW SOFTWARE, HARDWARE, GRAPHICS PROGRAMMING, ETC... NECESSARY TO INTEGRATE THE CONTROL OF ALL NEW EQUIPMENT.

ATC KEY NOTES:

1. THE TEMPERATURE CONTROLS CONTRACTOR (TC) SHALL COORDINATE THE LOCATION OF THE DEVICES, IN THE FIELD, WITH THE T&B CONTRACTOR TO ALLOW FOR THE OPTIMUM PERFORMANCE OF ITS RESPECTIVE VARIABLE VOLUME SYSTEM. AS A MINIMUM, LOCATE DEVICE(S) IN THE MAIN(S) APPROXIMATELY 2/3rds OF THE DISTANCE BETWEEN ITS RESPECTIVE HVAC EQUIPMENT BEING CONTROLLED AND THE FARTHEST, MOST REMOTE POINT OF THE SYSTEM.
2. PROVIDE A SEPARATE ANALOG OUTPUT FOR EACH DAMPER TO ALLOW FOR FULL MODULATION. A SINGLE OUTPUT FOR ALL DAMPERS IS NOT ACCEPTABLE.
3. VALUE INDICATED REPRESENTS AN INITIAL SETPOINT. ALL SETPOINTS SHALL BE ADJUSTABLE.

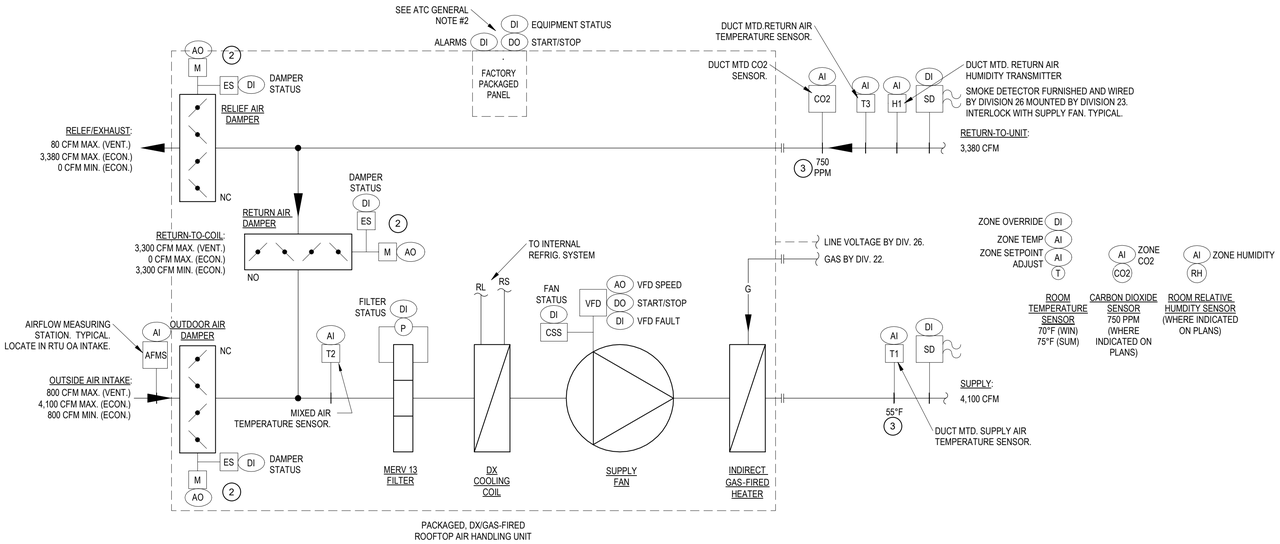

1 RTU FLOW & CONTROL
NOT TO SCALE

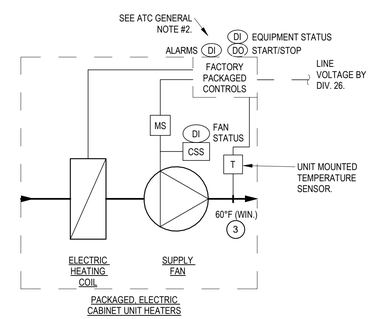

4 ELECTRIC CABINET UNIT HEATER SYSTEM FLOW AND CONTROL
NOT TO SCALE

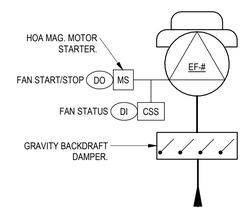

2 ROOF MOUNTED EXHAUST FAN SYSTEM FLOW & CONTROL
NOT TO SCALE

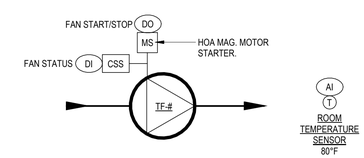

3 ELECTRIC ROOM INLINE TRANSFER FAN SYSTEM FLOW & CONTROL - TEMP.
NOT TO SCALE

Architecture Engineering Environmental Land Surveying
BL Companies
355 Research Parkway
Meriden, CT 06450
(203) 630-1406
(203) 630-2615 Fax
JESSE E. VOSE
No. 15
REGISTERED PROFESSIONAL ENGINEER MECHANICAL

PAWTUCKET-CENTRAL FALLS TRANSIT CENTER
300 PINE STREET PAWTUCKET, RI

REVISIONS

NO	DATE	DESCRIPTION

Designed:	PMS
Drawn:	PMS
Reviewed:	JV
Project No.:	2301115
Date:	04/09/2024

Issued for: CONSTRUCTION DOCUMENTS

Title: MECHANICAL DIAGRAMS

Sheet No. M701

4/4/2024 1:58:44 PM C:\Users\pmscofield\Documents\2301115_RIPTA_PassengerFacility_R23_MEP_pmscofield4GXCV.rvt

© 2022 BL COMPANIES, INC. THESE DRAWINGS SHALL NOT BE UTILIZED BY ANY PERSON, FIRM OR CORPORATION WITHOUT THE SPECIFIC WRITTEN PERMISSION OF BL COMPANIES.

SEQUENCE OF OPERATIONS:

THE MECHANICAL CONTRACTOR IS RESPONSIBLE FOR ALL CONTROLS, CONTROL WIRING AND CONTROL DESIGN.

SEQUENCE OF OPERATIONS

1. IT IS THE INTENT OF THIS AND OTHER DIV. 23 SPECIFICATIONS TO HAVE ALL HVAC EQUIPMENT CONTROLLED USING FACTORY MOUNTED AND WIRED IN THE FACTORY AND AS PROVIDED FOR FIELD INSTALLATION. WHERE THERE ARE ANY PORTION(S) OF THE SEQUENCES OF OPERATION DESCRIBED HEREIN AND IN OTHER DIV. 23 SPECIFICATIONS THAT CANNOT BE FULFILLED OR THEIR REQUIREMENTS MET BY THE FACTORY PROVIDED CONTROLS, THE AUTOMATIC TEMPERATURE CONTROLS CONTRACTOR SHALL COORDINATE WITH THE EQUIPMENT MANUFACTURER TO PROVIDE ALL NECESSARY COMPONENTS (IE: SOFTWARE, HARDWARE, PROGRAMMING, WIRING, END DEVICES, ETC...) TO FULFIL THOSE PORTIONS OF THE SEQUENCES FOR SEAMLESS OPERATION AND TO ALLOW FOR "FORWARDS AND BACKWARDS" COMMUNICATIONS FOR REMOTE MONITORING AND CONTROL. REFER TO THE FLOW & CONTROL DIAGRAM(S) FOR ADDITIONAL INFORMATION.
2. ROOFTOP UNITS: (SZVAV)
   - A. GENERAL:
     1. THE RTU SHALL BE OPERATED THROUGH ITS RESPECTIVE REMOTE PROGRAMMABLE CONTROLLER. THE CONTROLLER SHALL BE CAPABLE OF SCHEDULING OPERATION WITH 2-HOUR OCCUPANT OVERRIDE, AND 10-HOUR BACKUP. THE CONTROLLER SHALL BE LOCATED AS DIRECTED BY THE CLIENT'S REPRESENTATIVE.
     2. THE RTU SHALL OPERATE IN SEQUENCE PROVIDING ALL SYSTEM SAFETIES ARE SATISFIED.
     3. THE RTU-1 SHALL OPERATE IN A SINGLE ZONE VAV MODE OF OPERATION (SZVAV).
     4. THE OUTSIDE AIR QUANTITY SETPOINT SHALL BE VERIFIED VIA THE AIRFLOW MONITORING STATIONS AND INDICATED AT THE BMS OWS. DURING ANY PERIOD WHILE THE AHU IS IN OCCUPIED MODE THE UNIT MINIMUM OA VENTILATION QUANTITY SHALL BE MAINTAINED, EXCEPT WHEN THE CO_2 TRANSMITTER(S) OVERRIDE THE DAMPER OPERATIONS.
     5. THE DUCT MOUNTED CO_2 LEVEL TRANSMITTER(S) LOCATED IN THE SYSTEM RETURN AIRSTREAM AND THE OUTDOOR AIR CO_2 LEVEL TRANSMITTERS WILL BE MONITORED. EACH TRANSMITTER WILL HAVE AN ASSOCIATED TREND SET UP AT THE ONSET OF THE PROJECT BY THE BMS CONTRACTOR. EACH TRANSMITTER WILL TREND HOURLY. AT THE END OF EACH MONTH, THE TRENDS WILL BE PRINTED IN REPORT FORMAT.
     6. ALL SETPOINTS SHALL BE MONITORED AND ADJUSTABLE.
     7. ALL DATA POINTS WILL HAVE ABILITY TO BE TRENDED.
     8. ALL DATA POINTS MAY BE ALARMED.
     9. ALL ALARMS, VISIBLE AND AUDIBLE, SHALL BE INDICATED LOCALLY AND AT THE CENTRAL OPERATOR'S WORKSTATION (OWS).
   - B. UNIT SAFETIES:
     1. EMERGENCY SHUTDOWN: THE UNIT SHALL SHUT DOWN AND GENERATE AN ALARM UPON RECEIVING AN EMERGENCY SHUTDOWN SIGNAL..
     2. HIGH STATIC SHUTDOWN: THE UNIT SHALL SHUT DOWN AND GENERATE AN ALARM UPON RECEIVING AN HIGH STATIC SHUTDOWN SIGNAL.
     3. SUPPLY OR RETURN AIR SMOKE DETECTION: THE UNIT SHALL SHUT DOWN AND GENERATE AN ALARM UPON RECEIVING A SMOKE DETECTOR STATUS.
     4. FREEZE PROTECTION: THE UNIT SHALL SHUT DOWN AND GENERATE AN ALARM UPON RECEIVING A FREEZESTAT STATUS.
   - C. RUN CONDITIONS - SCHEDULED: THE UNIT SHALL RUN ACCORDING TO A USER DEFINABLE TIME SCHEDULE IN THE FOLLOWING MODES:
     1. UNOCCUPIED MODE (NIGHT SETPOINT):
        - a. SUMMER (SETUP) – 85 DEGREES F (ADJ.)
        - b. WINTER (SETBACK) – 55 DEGREES F (ADJ.)
     2. OCCUPIED MODE:
        - a. SUMMER – 75 DEGREES F (ADJ.)
        - b. WINTER – 70 DEGREES F (ADJ.)
     3. THE SPACE TEMPERATURE SET POINT CAN BE ADJUSTED:
        - a. LOCALLY AT THE CONTROLLER,
        - b. REMOTELY AT THE ROOM SENSOR,
        - c. OR VIA THE BMS.
   - D. UNOCCUPIED MODE: THE SUPPLY FAN SHALL BE OFF, THE REFRIGERATION SYSTEM AND/OR HEATING SYSTEM SHALL BE DEENERGIZED, THE OUTSIDE AIR AND EXHAUST AIR DAMPERS SHALL BE CLOSED, AND THE RETURN AIR DAMPER SHALL BE OPEN. UNIT SAFETIES SHALL BE ACTIVE AT ALL TIMES.
     1. DURING THIS MODE, THE UNIT SHALL BE INDEXED TO RUN TO MAINTAIN THE ZONES AT THEIR UNOCCUPIED TEMPERATURE SETPOINTS. REFER TO THE SEQUENCES BELOW FOR ADDITIONAL INFORMATION REGARDING UNIT COMPONENT OPERATIONS.
   - E. AHU OPTIMAL START: THE UNIT SHALL START PRIOR TO SCHEDULED OCCUPANCY BASED ON THE TIME NECESSARY FOR THE ZONES TO REACH THEIR OCCUPIED SETPOINTS, UNLESS SHUTDOWN ON SAFETIES.
     1. THE START TIME SHALL AUTOMATICALLY ADJUST BASED ON CHANGES IN OUTSIDE AIR TEMPERATURE AND ZONE TEMPERATURES.
     2. DURING OPTIMAL START, THE OUTSIDE AIR DAMPER SHALL BE FULLY CLOSED.
     3. WHEN THE ZONE TEMPERATURES REACH OCCUPIED SETPOINTS, THE UNIT SHALL BE AUTOMATICALLY INDEXED TO OCCUPIED MODE AND THE OUTSIDE AND RETURN AIR DAMPER SHALL BE MODULATED TO MAINTAIN THE MINIMUM OUTDOOR VENTILATION.
   - F. MINIMUM OUTSIDE AIR VENTILATION:
     1. MINIMUM OUTSIDE AIR VENTILATION: WHEN IN THE OCCUPIED MODE, THE CONTROLLER SHALL MEASURE THE OUTSIDE AIRFLOW AND MODULATE THE OUTSIDE AND RETURN AIR DAMPERS TO MAINTAIN THE PROPER MINIMUM OUTSIDE AIR VENTILATION (SEE SCHEDULE).
   - G. OCCUPIED MODES:
     1. WHEN THE RTU IS INDEXED INTO "OCCUPIED MODE", UNLESS SHUTDOWN ON SAFETIES, THE SUPPLY FAN SHALL BE ENABLED AND RUN CONTINUOUSLY. THE OA AND RETURN AIR DAMPERS SHALL BE POSITIONED TO PROVIDE THE MINIMUM OUTSIDE AIR VENTILATION. TO PREVENT SHORT CYCLING, THE SUPPLY FAN SHALL HAVE A USER DEFINABLE (ADJ.) MINIMUM RUNTIME.
        - A. RTUs: (SZVAV)
          1. THE SUPPLY FAN SHALL BE MODULATED TO MAINTAIN THE OCCUPIED SPACE TEMPERATURE SETPOINT. THE AIRFLOW SHALL VARY BETWEEN THE MIN. & MAX. INDICATED ON THE SCHEDULE.
     2. THE BMS SHALL MONITOR THE OA INTAKE THROUGH THE OA INTAKE AIRFLOW STATION AND MODULATE THE OA & RA AIR DAMPERS TO ASSURE THE MINIMUM OA VENTILATION IS MAINTAINED AS THE SUPPLY FAN MODULATES BETWEEN ITS MIN. AND MAX. AIRFLOW SETPOINTS.
     3. ALARMS SHALL BE PROVIDED AS FOLLOWS:
        - a. FAN FAILURE: COMMANDED ON, BUT THE STATUS IS OFF.
        - b. FAN IN HAND: COMMANDED OFF, BUT THE STATUS IS ON.
        - c. FAN VFD FAULT.
   - H. SUPPLY AIR TEMPERATURE SETPOINT (OPTIMIZED):
     1. RTUs: (SZVAV)
        - a. THE CONTROLLER SHALL MONITOR THE SUPPLY AIR TEMPERATURE AND SHALL MAINTAIN A SUPPLY AIR TEMPERATURE SETPOINT RESET BASED ON ZONE COOLING AND HEATING REQUIREMENTS.
          1. THE SUPPLY AIR TEMPERATURE SETPOINT SHALL BE RESET FOR COOLING BASED ON ZONE COOLING REQUIREMENTS AS FOLLOWS:
             - A. THE INITIAL SUPPLY AIR TEMPERATURE SETPOINT SHALL BE 55°F (ADJ.).
             - B. AS COOLING DEMAND INCREASES, THE SETPOINT SHALL INCREMENTALLY RESET DOWN TO A MINIMUM OF 53° F (ADJ.).
             - C. AS COOLING DEMAND DECREASES, THE SETPOINT SHALL INCREMENTALLY RESET UP TO A MAXIMUM OF 65° F (ADJ.).
          2. IF MORE ZONES NEED HEATING THAN COOLING, THEN THE SUPPLY AIR TEMPERATURE SETPOINT SHALL BE RESET FOR HEATING AS FOLLOWS:
             - A. THE INITIAL SUPPLY AIR TEMPERATURE SETPOINT SHALL BE 82°F (ADJ.).
             - B. AS HEATING DEMAND INCREASES, THE SETPOINT SHALL INCREMENTALLY RESET UP TO A MAXIMUM OF 85° F (ADJ.).
             - C. AS HEATING DEMAND DECREASES, THE SETPOINT SHALL INCREMENTALLY RESET DOWN TO A MINIMUM OF 72° F (ADJ.).
   - I. DX COOLING: THE CONTROLLER SHALL MEASURE THE SUPPLY AIR TEMPERATURE AND STAGE OR MODULATE THE PACKAGED REFRIGERATION SYSTEM TO MAINTAIN ITS COOLING SETPOINT. RTUS SHALL BE EQUIPPED WITH AN INTEGRATED DIFFERENTIAL ENTHALPY ECONOMIZER, WHERE THE ECONOMIZER IS THE FIRST STAGE OF COOLING AND MECHANICAL COOLING ENGAGES TO SUPPLEMENT THE ECONOMIZER. TO PREVENT SHORT CYCLING, THE STAGE SHALL HAVE A USER DEFINABLE (ADJ.) MINIMUM RUNTIME.
     1. THE COOLING SHALL BE ENABLED WHENEVER:
        - a. OUTSIDE AIR TEMPERATURE IS GREATER THAN 60°F (ADJ.).
        - b. AND THE ECONOMIZER (IF PRESENT) IS DISABLED OR FULLY OPEN.
        - c. AND THE SUPPLY FAN STATUS IS ON.
        - d. AND THE HEATING IS NOT ACTIVE.
     2. ALARMS SHALL BE PROVIDED AS FOLLOWS:
        - a. HIGH SUPPLY AIR TEMP: IF THE SUPPLY AIR TEMPERATURE IS 5°F (ADJ.) GREATER THAN SETPOINT.
     3. DEHUMIDIFICATION: THE CONTROLLER SHALL MEASURE THE RETURN AIR HUMIDITY AND OVERRIDE THE COOLING SEQUENCE TO MAINTAIN RETURN AIR HUMIDITY AT OR BELOW 50% RH (ADJ.). DEHUMIDIFICATION SHALL BE ENABLED WHENEVER THE SUPPLY FAN STATUS IS ON.
   - J. GAS HEATING:
     1. THE CONTROLLER SHALL MEASURE THE SUPPLY AIR TEMPERATURE AND MODULATE OR STAGE THE GAS HEATING SYSTEM TO MAINTAIN ITS HEATING SETPOINT. TO PREVENT SHORT CYCLING, THE SYSTEM SHALL HAVE A USER DEFINABLE (ADJ.) MINIMUM RUNTIME.
     2. HEATING SHALL BE ENABLED WHENEVER:
        - a. OUTSIDE AIR TEMPERATURE IS LESS THAN 60°F (ADJ.).
        - b. AND THE CRITICAL ZONE TEMPERATURE IS BELOW HEATING SETPOINT.
        - c. AND THE SUPPLY FAN STATUS IS ON.
        - d. AND THE COOLING (IF PRESENT) IS NOT ACTIVE.
     3. THE GAS HEATING SYSTEM SHALL RUN FOR FREEZE PROTECTION WHENEVER:
        - a. SUPPLY AIR TEMPERATURE DROPS FROM 40°F TO 35°F (ADJ.).
        - b. AND THE SUPPLY FAN STATUS IS ON.
     4. ALARMS SHALL BE PROVIDED AS FOLLOWS:
        - a. LOW SUPPLY AIR TEMP: IF THE SUPPLY AIR TEMPERATURE IS 5°F (ADJ.) LESS THAN SETPOINT.
   - K. ECONOMIZER MODE: THE UNIT'S PROGRAMMABLE CONTROLLER SHALL MONITOR THE RETURN AIR & OUTSIDE AIR ENTHALPY. WHEN THE OUTSIDE AIR ENTHALPY IS LESS THAN THE RETURN AIR ENTHALPY, THE SYSTEM SHALL OPERATE AS FOLLOWS:
     1. THE CONTROLLER SHALL MODULATE THE ECONOMIZER DAMPERS (RETURN & OA DAMPERS) IN SEQUENCE. WHENEVER THE SYSTEM IS IN OCCUPIED MODE, THE OA DAMPER SHALL MODULATE BETWEEN THE MIN. OA VENT AIRFLOW AND 100%. THE OUTSIDE AIR DAMPER SHALL NEVER PROVIDE LESS THAN THE MIN. OA VENT AIRFLOW.
        - A. RTUs (SZVAV): THE DAMPERS SHALL MODULATE TO MAINTAIN THE OCCUPIED SPACE TEMPERATURE SETPOINT.
        - B. RTUs (MZVAV): THE DAMPERS SHALL MODULATE TO MAINTAIN THE SUPPLY AIR TEMPERATURE SETPOINT.
     2. THE ECONOMIZER SHALL BE ENABLED WHENEVER:
        - a. OUTSIDE AIR TEMPERATURE IS LESS THAN 65°F (ADJ.).
        - b. AND THE OUTSIDE AIR TEMPERATURE IS LESS THAN THE RETURN AIR TEMPERATURE.
        - c. AND THE OUTSIDE AIR ENTHALPY IS LESS THAN THE RETURN AIR ENTHALPY.
        - d. AND THE SUPPLY FAN STATUS IS ON.
     3. THE ECONOMIZER SHALL BE DISABLED WHENEVER:
        - a. MIXED AIR TEMPERATURE DROPS TO 35°F (ADJ.).
        - b. OR THE OA ENTHALPY EXCEEDS RA ENTHALPY.
        - c. OR ON LOSS OF SUPPLY FAN STATUS.
        - d. OR FREEZESTAT (IF PRESENT) IS ON.
   - L. DEMAND CONTROL VENTILATION (DCV) MODE:
     1. DCV SHALL NOT BE AVAILABLE DURING UNOCCUPIED, OR MORNING WARM UP/COOL DOWN MODES.
     2. THE OUTDOOR AMBIENT AIR CO^2 LEVEL SHALL BE CONTINUOUSLY MONITORED. THE INDOOR CO2 SETPOINT SHALL BE EQUAL TO THE OUTDOOR AIR LEVEL PLUS 350 PPM (ADJ.).
     3. THE SPACE, OR RETURN DUCT MOUNTED CO^2 SENSOR SHALL BE CONTINUOUSLY MONITORED,
        - a. WHEN THE INDOOR CO2 LEVELS EXCEED SETPOINT, THE OA AND RA DAMPERS SHALL BE MODULATED IN SEQUENCE TO INCREASE THE OA % AND POSITIONED TO PROVIDE THE MAX. VENTILATION AIRFLOW. THE RA DAMPER SHALL BE OPERATED INVERSELY TO THE OA DAMPER AS THEY ARE MODULATED.
        - b. WHEN THE INDOOR CO^2 SETPOINT IS SATISFIED, THE DCV MODE SHALL BE DISABLED AND THE OA & RA DAMPERS SHALL BE POSITIONED TO PROVIDE THE MIN. VENTILATION AIRFLOW.
   - M. THE UNITS ARE SUBJECT TO SYSTEM SAFETIES:
     1. HIGH STATIC SHUTDOWN: THE UNIT SHALL SHUT DOWN AND GENERATE AN ALARM UPON RECEIVING AN HIGH STATIC SHUTDOWN SIGNAL.
     2. FREEZE PROTECTION: THE UNIT SHALL SHUT DOWN AND GENERATE AN ALARM UPON RECEIVING A FREEZESTAT STATUS.
     3. PREFILTER DIFFERENTIAL PRESSURE MONITOR: THE CONTROLLER SHALL MONITOR THE DIFFERENTIAL PRESSURE ACROSS THE FINAL FILTER.
        - a. ALARMS SHALL BE PROVIDED AS FOLLOWS:
          1. PREFILTER CHANGE REQUIRED: PREFILTER DIFFERENTIAL PRESSURE EXCEEDS A USER DEFINABLE LIMIT (ADJ.).
     4. FINAL FILTER DIFFERENTIAL PRESSURE MONITOR: THE CONTROLLER SHALL MONITOR THE DIFFERENTIAL PRESSURE ACROSS THE FINAL FILTERS.
        - a. ALARMS SHALL BE PROVIDED AS FOLLOWS:
          1. FINAL FILTER CHANGE REQUIRED: FINAL FILTER DIFFERENTIAL PRESSURE EXCEEDS A USER DEFINABLE LIMIT (ADJ.).
     5. MIXED AIR TEMPERATURE: THE CONTROLLER SHALL MONITOR THE MIXED AIR TEMPERATURE AND USE AS REQUIRED FOR ECONOMIZER CONTROL (IF PRESENT) OR PREHEATING CONTROL (IF PRESENT)
        - a. ALARMS SHALL BE PROVIDED AS FOLLOWS:
          1. HIGH MIXED AIR TEMP: IF THE MIXED AIR TEMPERATURE IS GREATER THAN 90°F (ADJ.).
          2. LOW MIXED AIR TEMP: IF THE MIXED AIR TEMPERATURE IS LESS THAN 45°F (ADJ.).
     6. RETURN AIR HUMIDITY: THE CONTROLLER SHALL MONITOR THE RETURN AIR HUMIDITY AND USE AS REQUIRED FOR ECONOMIZER CONTROL (IF PRESENT) OR HUMIDITY CONTROL (IF PRESENT).
        - a. ALARMS SHALL BE PROVIDED AS FOLLOWS:
          1. HIGH RETURN AIR HUMIDITY: IF THE RETURN AIR HUMIDITY IS GREATER THAN 70% (ADJ.).
          2. LOW RETURN AIR HUMIDITY: IF THE RETURN AIR HUMIDITY IS LESS THAN 30% (ADJ.).
     7. RETURN AIR CARBON DIOXIDE (CO2) CONCENTRATION MONITORING: THE CONTROLLER SHALL MEASURE THE RETURN AIR CO2 CONCENTRATION.
        - a. ALARMS SHALL BE PROVIDED AS FOLLOWS:
          1. HIGH RETURN AIR CARBON DIOXIDE CONCENTRATION: IF THE RETURN AIR CO2 CONCENTRATION IS GREATER THAN 1000 PPM (ADJ.) WHEN IN THE UNIT IS RUNNING.
     8. RETURN AIR TEMPERATURE: THE CONTROLLER SHALL MONITOR THE RETURN AIR TEMPERATURE AND USE AS REQUIRED FOR SETPOINT CONTROL OR ECONOMIZER CONTROL (IF PRESENT).
        - a. ALARMS SHALL BE PROVIDED AS FOLLOWS:
          1. HIGH RETURN AIR TEMP: IF THE RETURN AIR TEMPERATURE IS GREATER THAN 90°F (ADJ.).
          2. LOW RETURN AIR TEMP: IF THE RETURN AIR TEMPERATURE IS LESS THAN 45°F (ADJ.).
     9. SUPPLY AIR TEMPERATURE: THE CONTROLLER SHALL MONITOR THE SUPPLY AIR TEMPERATURE.
        - a. ALARMS SHALL BE PROVIDED AS FOLLOWS:
          1. HIGH SUPPLY AIR TEMP: IF THE SUPPLY AIR TEMPERATURE IS GREATER THAN 120°F (ADJ.).
          2. LOW SUPPLY AIR TEMP: IF THE SUPPLY AIR TEMPERATURE IS LESS THAN 45°F (ADJ.)
     10. DUCT SMOKE DETECTORS: IF PRODUCTS OF COMBUSTION ARE PRESENT WITHIN THE SUPPLY AND/OR RETURN DUCTS. THE SUPPLY AND EXHAUST FANS SHALL BE DISABLED AND THE OUTSIDE AND EXHAUST AIR DAMPERS SHALL CLOSE.
         - a. ALARMS SHALL BE PROVIDED AS FOLLOWS:
           1. UNIT SHUTDOWN: IF PRODUCTS OF COMBUSTION ARE PRESENT WITHIN THE SUPPLY AND/OR RETURN DUCTS.
     11. CURRENT SENSORS INSTALLED AT THE SUPPLY AND EXHAUST FANS AND THE ERW SHALL MONITOR THEIR RESPECTIVE STATUS. IF THE DEVICE STATUS SHOULD DIFFER FROM THE COMMAND, AN ALARM SHALL BE SENT TO THE BMS OWS.
3. EXHAUST FANS: (SCHEDULED)
   - A. GENERAL: THE CONTROLLER SHALL MONITOR THE FAN STATUS.
   - B. RUN CONDITIONS: THE FAN SHALL BE COMMANDED ON VIA BMS SCHEDULING. OCCUPIED - FAN ON, UN-OCCUPIED - FAN OFF.
   - C. FAN: WHEN THE FAN IS COMMANDED ON, THE FAN SHALL BE ENABLED AND RUN CONTINUOUSLY. WHEN THE FAN IS COMMANDED OFF, THE FAN SHALL BE DEENERGIZED.
   - D. ALARMS SHALL BE PROVIDED AS FOLLOWS:
     1. FAN FAILURE: COMMANDED ON, BUT THE STATUS IS OFF.
     2. FAN IN HAND: COMMANDED OFF, BUT THE STATUS IS ON.
4. TRANSFER FANS: (TEMPERATURE)
   - A. GENERAL: THE CONTROLLER SHALL MONITOR THE FAN STATUS.
   - B. RUN CONDITION: THE FAN SHALL BE COMMANDED ON ANYTIME THE ZONE TEMPERATURE RISES ABOVE SETPOINT.
   - C. FAN: WHEN THE FAN IS COMMANDED ON, THE FAN SHALL BE ENABLED AND RUN CONTINUOUSLY TO MAINTAIN A ZONE TEMPERATURE COOLING SETPOINT OF 85°F (ADJ.).. WHEN THE ZONE TEMPERATURE DROPS BELOW SETPOINT, THE FAN SHALL BE DEENERGIZED.
   - D. ALARMS SHALL BE PROVIDED AS FOLLOWS:
     1. FAN FAILURE: COMMANDED ON, BUT THE STATUS IS OFF.
     2. FAN IN HAND: COMMANDED OFF, BUT THE STATUS IS ON.
     3. HIGH ZONE TEMP.: IF ZONE TEMPERATURE RISES ABOVE COOLING SETPOINT BY A USER DEFINABLE AMOUNT (ADJ.).
5. ELECTRIC UNIT HEATERS:
   - A. GENERAL:
     1. THE EUHs SHALL BE PACKAGED WITH ALL CONTROLS MOUNTED AND WIRED IN THE FACTORY AND AS PROVIDED FOR FIELD INSTALLATION. THE ATC CONTRACTOR SHALL COORDINATE WITH THE MC AND THE MANUFACTURER TO ENSURE THAT ALL THE NECESSARY COMPONENTS ARE PROVIDED TO ACHIEVE THE SEQUENCE OF OPERATION(S) INDICATED HEREIN. THE ATC CONTRACTOR SHALL PROVIDE ALL NECESSARY COMPONENTS TO ALLOW FOR THE EUHs TO BE FULLY INTEGRATED WITH THE ATC SYSTEM TO ALLOW FOR "FORWARDS AND BACKWARDS" COMMUNICATIONS FOR MONITORING AND CONTROL.
   - B. RUN CONDITIONS - THE UNIT SHALL RUN ACCORDING TO A USER DEFINABLE TIME SCHEDULE IN THE FOLLOWING MODES:
     1. OCCUPIED MODE: THE UNIT SHALL MAINTAIN A HEATING SETPOINT OF 60°F (ADJ.).
     2. UNOCCUPIED MODE (NIGHT SETBACK): THE UNIT SHALL MAINTAIN A HEATING SETPOINT OF 55°F (ADJ.).
   - C. ZONE OPTIMAL START: THE UNIT SHALL USE AN OPTIMAL START ALGORITHM FOR MORNING START-UP. THIS ALGORITHM SHALL MINIMIZE THE UNOCCUPIED WARM-UP OR COOL-DOWN PERIOD WHILE STILL ACHIEVING COMFORT CONDITIONS BY THE START OF SCHEDULED OCCUPIED PERIOD.
   - D. ZONE UNOCCUPIED OVERRIDE: A TIMED LOCAL OVERRIDE CONTROL SHALL ALLOW AN OCCUPANT TO OVERRIDE THE SCHEDULE AND PLACE THE UNIT INTO AN OCCUPIED MODE FOR AN ADJUSTABLE PERIOD OF TIME. AT THE EXPIRATION OF THIS TIME, CONTROL OF THE UNIT SHALL AUTOMATICALLY RETURN TO THE SCHEDULE.
   - E. FAN: THE FAN SHALL RUN ANYTIME THE ZONE TEMPERATURE DROPS BELOW HEATING SETPOINT, UNLESS SHUTDOWN ON SAFETIES.
   - F. FAN STATUS: THE CONTROLLER SHALL MONITOR THE FAN STATUS.
   - G. ELECTRIC HEATING STAGE: THE CONTROLLER SHALL MEASURE THE ZONE TEMPERATURE AND STAGE THE HEATING TO MAINTAIN ITS HEATING SETPOINT. TO PREVENT SHORT CYCLING, THE STAGE SHALL HAVE A USER DEFINABLE (ADJ.) MINIMUM RUNTIME.
     1. THE HEATING SHALL BE ENABLED WHENEVER:
        - a. OUTSIDE AIR TEMPERATURE IS LESS THAN 50°F (ADJ.).
        - b. AND THE ZONE TEMPERATURE IS BELOW HEATING SETPOINT.
        - c. AND THE FAN IS ON.
   - H. DISCHARGE AIR TEMPERATURE: THE CONTROLLER SHALL MONITOR THE DISCHARGE AIR TEMPERATURE.
   - I. ALARMS SHALL BE PROVIDED AS FOLLOWS:
     1. FAN FAILURE: COMMANDED ON, BUT THE STATUS IS OFF.
     2. FAN IN HAND: COMMANDED OFF, BUT THE STATUS IS ON.
     3. HIGH DISCHARGE AIR TEMP: IF THE DISCHARGE AIR TEMPERATURE IS GREATER THAN 120°F (ADJ.).
     4. LOW DISCHARGE AIR TEMP: IF THE DISCHARGE AIR TEMPERATURE IS LESS THAN 40°F (ADJ.).
     5. LOW ZONE TEMP: IF THE ZONE TEMPERATURE IS LESS THAN THE HEATING SETPOINT BY A USER DEFINABLE AMOUNT (ADJ.).
6. SPLIT SYSTEMS AIR CONDITIONERS: (AC/CU) (COMPUTER ROOM - CLG ONLY)
   - A. GENERAL:
     1. PROVIDE FACTORY PACKAGED AUTOMATIC TEMPERATURE CONTROLS (ATC) SYSTEM WITH FULL INTEGRATION WITH THE OWNERS ATC/BMS WITH FORWARD AND BACKWARD COMMUNICATIONS FOR FULL UNIT CONTROL AT THE ATC/BMS OPERATOR'S WORKSTATION.
        - a. COORDINATE WITH THE AC/CU MANUFACTURER TO ENSURE THAT ALL OF THE NECESSARY COMPONENTS ARE PROVIDED TO ACHIEVE THE SEQUENCE OF OPERATION(S) INDICATED HEREIN. REFER TO THE FLOW & CONTROL DIAGRAMS FOR ADDITIONAL INFORMATION.
     2. THE AC/CU SHALL BE OPERATED THROUGH ITS RESPECTIVE REMOTE PROGRAMMABLE CONTROLLER. THE CONTROLLER SHALL BE CAPABLE OF SCHEDULING OPERATION WITH 2-HOUR OCCUPANT OVERRIDE, AND 10-HOUR BACKUP. THE CONTROLLER SHALL BE LOCATED AS DIRECTED BY THE CLIENT'S REPRESENTATIVE.
     3. THE AC/CU SHALL OPERATE IN SEQUENCE PROVIDING ALL SYSTEM SAFETIES ARE SATISFIED.
     4. THE AC/CU SHALL OPERATE IN A SINGLE ZONE CV MODE OF OPERATION.
     5. ALL SETPOINTS SHALL BE ADJUSTABLE.
     6. EMERGENCY SHUTDOWN: THE UNIT SHALL SHUT DOWN AND GENERATE AN ALARM UPON RECEIVING AN EMERGENCY SHUTDOWN SIGNAL.
     7. SMOKE DETECTION: THE UNIT SHALL SHUT DOWN AND GENERATE AN ALARM UPON RECEIVING A SMOKE DETECTOR STATUS FOR SYSTEMS 2000 CFM OR GREATER.
   - B. SPACE TEMPERATURE SETPOINTS:
     1. 75°F DB @ 50% RH (SUM.), 75°F (WIN.).
   - C. COOLING MODE:
     1. WHEN THE AC/CU IS INDEXED TO RUN, THE SUPPLY FAN SHALL BE ENABLED AND RUN CONTINUOUSLY
     2. THE CONTROLLER SHALL MEASURE THE ZONE TEMPERATURE AND CYCLE THE COMPRESSOR TO MAINTAIN ITS SETPOINT. TO PREVENT SHORT CYCLING, THE STAGE SHALL HAVE A USER DEFINABLE (ADJ.) MINIMUM RUNTIME. THE COMPRESSOR SHALL RUN SUBJECT TO ITS OWN INTERNAL SAFETIES AND CONTROLS.
     3. THE COOLING SHALL BE ENABLED WHENEVER:
        - a. OUTSIDE AIR TEMPERATURE IS ≥ 60°F (ADJ.).
        - b. AND THE SPACE TEMPERATURE IS ABOVE COOLING SETPOINT.
        - c. AND THE FAN STATUS IS ON.
   - D. ALARMS:
     1. SPACE:
        - a. HIGH ZONE TEMP: IF THE ZONE TEMPERATURE IS GREATER THAN THE COOLING SETPOINT BY A USER DEFINABLE AMOUNT (ADJ.).
        - b. LOW ZONE TEMP: IF THE ZONE TEMPERATURE IS LESS THAN THE HEATING SETPOINT BY A USER DEFINABLE AMOUNT (ADJ.).
     2. FILTER DIFFERENTIAL PRESSURE MONITOR: THE CONTROLLER SHALL MONITOR THE DIFFERENTIAL PRESSURE ACROSS THE FILTER.
        - a. ALARMS SHALL BE PROVIDED AS FOLLOWS: FILTER CHANGE REQUIRED: FILTER DIFFERENTIAL PRESSURE EXCEEDS A USER DEFINABLE LIMIT (ADJ.).
     3. DISCHARGE AIR TEMPERATURE: THE CONTROLLER SHALL MONITOR THE DISCHARGE AIR TEMPERATURE.
        - a. ALARMS SHALL BE PROVIDED AS FOLLOWS:
          1. HIGH DISCHARGE AIR TEMP: IF THE DISCHARGE AIR TEMPERATURE IS GREATER THAN 120°F (ADJ.).
          2. LOW DISCHARGE AIR TEMP: IF THE DISCHARGE AIR TEMPERATURE IS LESS THAN 40°F (ADJ.).
     4. FAN STATUS: THE CONTROLLER SHALL MONITOR THE FAN STATUS.
        - a. ALARMS SHALL BE PROVIDED AS FOLLOWS:
          1. FAN FAILURE: COMMANDED ON, BUT THE STATUS IS OFF.
          2. FAN IN HAND: COMMANDED OFF, BUT THE STATUS IS ON.
          3. FAN RUNTIME EXCEEDED: FAN STATUS RUNTIME EXCEEDS A USER DEFINABLE LIMIT (ADJ.).
     5. SPACE HUMIDITY: THE CONTROLLER SHALL MONITOR THE SPACE HUMIDITY.
        - a. ALARMS SHALL BE PROVIDED AS FOLLOWS:
          1. HIGH ZONE HUMIDITY: IF THE ZONE HUMIDITY IS GREATER THAN 70% (ADJ.).
          2. LOW ZONE HUMIDITY: IF THE ZONE HUMIDITY IS LESS THAN 35% (ADJ.).

Architecture
Engineering
Environmental
Land Surveying
BL Companies

355 Research Parkway
Meriden, CT 06450
(203) 630-1406
(203) 630-2615 Fax

JESSE E. VOSE
STATE OF RHODE ISLAND
No. 14344
HOPE
REGISTERED
PROFESSIONAL ENGINEER
MECHANICAL

PAWTUCKET-CENTRAL FALLS TRANSIT CENTER
300 PINE STREET PAWTUCKET, RI

REVISIONS

NO	DATE	DESCRIPTION

Designed:	PMS
Drawn:	PMS
Reviewed:	JV
Project No.:	2301115
Date:	04/09/2024

Issued for:
CONSTRUCTION DOCUMENTS

Title:
MECHANICAL DIAGRAMS

Sheet No.
M702

4/4/2024 1:58:45 PM C:\Users\pmscofield\Documents\2301115_RIPTA_PassengerFacility_R23_MEP_pmscofield4GXCV.rvt

© 2022 BL COMPANIES, INC. THESE DRAWINGS SHALL NOT BE UTILIZED BY ANY PERSON, FIRM OR CORPORATION WITHOUT THE SPECIFIC WRITTEN PERMISSION OF BL COMPANIES.

LIGHTING SYMBOL LEGEND

SYMBOL	DESCRIPTION	SYMBOL	DESCRIPTION
	RECESSED 2X2 LED LIGHT FIXTURE		
	RECESSED 2X2 LED EMERGENCY LIGHT FIXTURE (FULL SHADED LUMINAIRE INDICATED NIGHT LIGHT)	P C	PHOTOCELL (MOUNTED ON ROOF).
	RECESSED LINEAR LED LIGHT FIXTURE	P P	UNIVERSAL VOLTAGE POWER PACK. SENSOR SWITCH PP20 SERIES.
	RECESSED LINEAR LED EMERGENCY LIGHT FIXTURE (FULL SHADED LUMINAIRE INDICATED NIGHT LIGHT)	ds	DAYLIGHT HARVESTING PHOTOCELL.
	RECESSED LED DOWN LIGHT FIXTURE	S	SINGLE POLE TOGGLE SWITCH. (48" A.F.F. UNLESS NOTED OTHERWISE)
	RECESSED LED EMERGENCY DOWN LIGHT FIXTURE (FULL SHADED LUMINAIRE INDICATED NIGHT LIGHT)	S_3	THREE WAY TOGGLE SWITCH. (48" A.F.F. UNLESS NOTED OTHERWISE).
	SUSPENDED LINEAR LED LIGHT FIXTURE	S_{OC}	OCCUPANCY SWITCH, SENSOR SWITCH WSD SERIES. (48" A.F.F. UNLESS NOTED OTHERWISE).
	SUSPENDED LINEAR LED LIGHT FIXTURE (FULL SHADED LUMINAIRE INDICATED NIGHT LIGHT)	S_D	DIMMING SWITCH, SENSOR SWITCH SPODMRD SERIES. (48" A.F.F. UNLESS NOTED OTHERWISE).
	DECORATIVE LED WALL SCONCE	S_{D3}	DIMMING SWITCH, SENSOR SWITCH SPODMRD SERIES. (48" A.F.F. UNLESS NOTED OTHERWISE).
	WALL MOUNTED EXTERIOR LED LIGHT FIXTURE	S_P	SINGLE POLE TOGGLE SWITCH WITH PILOT LIGHT. (48" A.F.F. UNLESS NOTED OTHERWISE).
	WALL MOUNTED EXTERIOR EMERGENCY LED LIGHT FIXTURE	S_K	SINGLE POLE KEY SWITCH. (48" A.F.F. UNLESS NOTED OTHERWISE).
	WALL/ CEILING MOUNTED SELF CONTAINED DOUBLE HEAD EMERGENCY LIGHT UNIT	S_{C3}	THREE POSITION CONTROL SWITCH.(48" A.F.F. UNLESS NOTED OTHERWISE).
	WALL MOUNTED EXIT SIGN (NUMBER OF ILLUMINATED FACES AND DIRECTIONAL CHEVRONS INDICATED ON FLOOR PLAN)	S_{MT}	SINGLE POLE MOMENTARY SWITCH. (48" A.F.F. UNLESS NOTED OTHERWISE).
	CEILING MOUNTED EXIT SIGN (NUMBER OF ILLUMINATED FACES AND DIRECTIONAL CHEVRONS INDICATED ON FLOOR PLAN)	S_{DOC}	DIMMING OCCUPANCY SWITCH, SENSOR SWITCH SPODMRD SERIES. (48" A.F.F. UNLESS NOTED OTHERWISE).
LCP	LIGHTING CONTROL PANEL	OC 1	CEILING MOUNT STANDARD RANGE 360° PASSIVE INFRARED OCCUPANCY SWITCH. SENSOR SWITCH CM 9 SERIES.
KP	LIGHTING CONTROLS KEY PAD.	OC 2	CEILING MOUNT STANDARD RANGE 360° PASSIVE INFRARED OCCUPANCY SWITCH. SENSOR SWITCH CM 9 SERIES, PHOTOCELL W/ DIMMING.
TC	TIME CLOCK.	OC 3	CEILING MOUNT EXTENDED RANGE 360° PASSIVE INFRARED OCCUPANCY SWITCH. SENSOR SWITCH CM 10 SERIES, LOW TEMP/ HIGH HUMIDITY, PHOTOCELL W/ DIMMING.
		OC 4	CEILING MOUNT EXTENDED RANGE 360° PASSIVE INFRARED OCCUPANCY SWITCH. SENSOR SWITCH CM 10 SERIES.
		OC 5	CEILING MOUNT EXTENDED RANGE 360° PASSIVE INFRARED OCCUPANCY SWITCH. SENSOR SWITCH CM 10 SERIES, PHOTOCELL W/ DIMMING.
		OC 6	CEILING MOUNT STANDARD RANGE 360° DUAL TECHNOLOGY OCCUPANCY SWITCH. SENSOR SWITCH CM PDT 9 SERIES.
		OC 7	CEILING MOUNT STANDARD RANGE 360° DUAL TECHNOLOGY OCCUPANCY SWITCH. SENSOR SWITCH CM PDT 9 SERIES, LOW VOLTAGE RELAY.
		OC 8	CEILING MOUNT EXTENDED RANGE 360° DUAL TECHNOLOGY OCCUPANCY SWITCH. SENSOR SWITCH CM PDT 10 SERIES.
		OC 9	CEILING MOUNT EXTENDED RANGE 360° DUAL TECHNOLOGY OCCUPANCY SWITCH. SENSOR SWITCH CM PDT 10 SERIES, PHOTOCELL W/ DIMMING.

NOTE:

NOT ALL SYMBOLS MAY APPEAR ON THE DRAWINGS.

NOTE:
CLEAR HEIGHTS INDICATED ON ARCHITECTURE DRAWINGS ARE TO BE MAINTAINED, INCLUDING ALL BUILDING SYSTEMS, FIRE PROTECTION, HVAC, TELECOM AND LIGHTING UNLESS SPECIFICALLY COORDINATED WITH TENANT. A MAXIMUM 8" TALL UTILITY SPACE IS PROVIDED BETWEEN THE INDICATED CLEAR HEIGHTS AND THE BOTTOM OF STRUCTURE (DEFLECTED UNDER LIVE LOAD).

ELECTRICAL ABBREVIATIONS

A OR AMP	AMPERES	FA	FIRE ALARM	MO	MOTOR OPERATED	TYP	TYPICAL
AAC	ABOVE ACCESSIBLE CEILING	FACP	FIRE ALARM CONTROL PANEL	MTD	MOUNTED	TV	TELEVISION
AC	ALTERNATING CURRENT	FCU	FAN COIL UNIT.	MUA, MAU	MAKE-UP AIR UNIT	TVSS	TRANSIENT VOLTAGE SURGE SUPPRESSOR
ACT	ABOVE COUNTER TOP	FLA	FULL LOAD AMPS	MW	MICROWAVE		
AFF	ABOVE FINISHED FLOOR			NC	NORMALLY CLOSED	UF	UNDERFLOOR
AFG	ABOVE FINISHED GRADE	GFI, GFCI	GROUND FAULT CIRCUIT INTERRUPTER	NEC	NATIONAL ELECTRIC CODE	UG	UNDERGROUND
AHJ	AUTHORITY HAVING JURISDICTION	G, GND	GROUND	NF	NOT FUSED		
AHU	AIR HANDLING UNIT.	GRS	GALVANIZED RIGID STEEL	NFPA	NATIONAL FIRE PROTECTION ASSOCIATION	UL	UNDERWRITERS LABORATORIES
AIC	INTERRUPTING CAPACITY(RMS SYMMETRICAL AMPERES)					UP	UP
ATS	AUTOMATIC TRANSFER SWITCH	HOA	HANDS-OFF AUTOMATIC SWITCH	NIC	NOT IN CONTRACT	UTP	UNSHIELDED TWISTED PAIR
		HP	HORSEPOWER	NL	NIGHT LIGHT		
BFG	BELOW FINISHED GRADE	HVAC	HEATING, VENTILATING AND AIR CONDITIONING	NO	NORMALLY OPEN	V	VOLTS
BKBD	BACKBOARD			NTS	NOT TO SCALE	VP	VAPORPROOF
		IG	ISOLATED GROUND			VSD	VARIABLE SPEED DRIVE
C OR COND	CONDUIT	IMC	INTERMEDIATE METALLIC CONDUIT	OC	OCCUPANCY SENSOR	VFD	VARIABLE FREQUENCY DRIVE
C/T	CURRENT TRANSFORMER					VM	VENDING MACHINE
CTR	COUNTER	JB	JUNCTION BOX	P	POLE		
CB, C/B	CIRCUIT BREAKER			PB	PULL BOX	W/	WITH
CFA	CALL FOR ASSISTANCE	KCMIL	1000 CIRCULAR MILS	PC	PULL CHAIN	WC	WATER COOLER
CLG	CEILING	KV	KILOVOLTS (1000 VOLTS)	PE	PNEUMATIC ELECTRIC SWITCH	WP	WEATHERPROOF
CPT	CURRENT POTENTIAL TRANS.	KVA	KILOVOLT AMPERES (1000 VOLT-AMPERES)	PM	PROJECT MANAGER		
CU	CONDENSING UNIT	KW	KILOWATTS (1000 WATTS)	PH	PHASE	XFMR, TXFMR	TRANSFORMER
				P/T	POTENTIAL TRANSFORMER		
DC	DIRECT CURRENT	LCP	LIGHTING CONTROL PANEL	PVC	POLYVINYL CHLORIDE		
DISC. SW	DISCONNECT SWITCH	LRA	LOCKED ROTOR AMPS	PWU	PURCHASED WITH UNIT		
DN	DOWN						
		MCA	MINIMUM CIRCUIT AMPS	REF	REFRIGERATOR		
EO	ELECTRICALLY OPERATED	MCB	MAIN CIRCUIT BREAKER	RGS	RIGID GALVANIZED STEEL		
EDH	ELECTRIC DUCT HEATER	MCC	MOTOR CONTROL CENTER	RMC	RIGID METALLIC CONDUIT	EXISTING ELECTRICAL EQUIPMENT ABBREVIATIONS	
EF	EXHAUST FAN	MCM	THOUSAND CIRCULAR MILS	RTU	ROOFTOP UNIT		
EM	EMERGENCY	MD	MOTORIZED DAMPER	SW	SWITCH	EX	EXISTING TO REMAIN.
EP	ELECTRIC PNEUMATIC SWITCH	MDP	MAIN DISTRIBUTION PANEL	SWBD	SWITCHBOARD	RE	REMOVE EXISTING.
ETR, E	EXISTING TO REMAIN	MFR, MFTR	MANUFACTURER			RL	RELOCATE EXISTING.
EUH	ELECTRIC UNIT HEATER	MH	MECHANICALLY HELD	TC	TIME CLOCK	NL	NEW LOCATION OF EXISTING RELOCATED.
EWC	ELECTRIC WATER COOLER	MIC	MICROPHONE	TEL	TELEPHONE	NR	NEW TO REPLACE EXISTING.
EWH	ELECTRIC WALL HEATER	MLO	MAIN LUGS ONLY	TL	TWIST LOCK	RR	REMOVE AND REPLACE ON NEW SURFACE.

NOTE:

NOT ALL ABBREVIATIONS MAY APPEAR ON THE DRAWINGS.

TEL/COM LOW VOLTAGE SYMBOL LEGEND

SYMBOL	DESCRIPTION	SYMBOL	DESCRIPTION
	PHONE OUTLET. COORDINATE FINAL LOCATIONS AND QUANTITIES WITH TEL / COM DRAWINGS/ INSTALLER.		FIXED CAMERA
	TEL / DATA OUTLET. (# INDICATES NUMBER OF DATA DROPS). COORDINATE FINAL LOCATIONS AND QUANTITIES WITH TEL / COM DRAWINGS/ INSTALLER.		DOME CAMERA
	DATA OUTLET. (# INDICATES NUMBER OF DATA DROPS). COORDINATE FINAL LOCATIONS AND QUANTITIES WITH TEL / COM DRAWINGS/ INSTALLER.	T	THERMOSTAT FURNISHED BY DIV. 15, INSTALLED AND WIRED BY DIV. 15
TV	CABLE CONNECTION.		
CR	CARD READER		
DC	SECURITY DOOR CONTACT		
MD	MAGNETIC DOOR HOLDER		
REX	REQUEST TO EXIT		
PB	PUSH BUTTON (DOOR ASSIST).		

NOTE:

NOT ALL SYMBOLS MAY APPEAR ON THE DRAWINGS.

POWER SYMBOL LEGEND

SYMBOL	DESCRIPTION	SYMBOL	DESCRIPTION
	DUPLEX RECEPTACLE. (18" A.F.F. UNLESS NOTED OTHERWISE).		HEAVY DUTY DISCONNECT SWITCH (NON-FUSED)
	QUAD RECEPTACLE. (18" A.F.F. UNLESS NOTED OTHERWISE).		WEATHER PROOF HEAVY DUTY FUSED DISCONNECT SWITCH
GFI	DUPLEX RECEPTACLE EQUIPPED WITH INTEGRAL GROUND FAULT INTERRUPTER. (18" A.F.F. UNLESS NOTED OTHERWISE).		MAGNETIC MOTOR STARTER
WP	WEATHER PROOF DUPLEX RECEPTACLE. (18" A.F.F. UNLESS NOTED OTHERWISE).	M	MOTOR
CTR	DUPLEX RECEPTACLE. (10" ABOVE COUNTER UNLESS NOTED OTHERWISE).	MD	MOTORIZED DAMPER, PROVIDED BY DIV. 15, WIRED BY DIV. 16
MW	DUPLEX RECEPTACLE. (CENTERED BEHIND MICROWAVE, REFER TO ARCHITECTURAL ELEVATIONS FOR EXACT DEVICE MOUNTING LOCATIONS).	S_T	THERMAL OVERLOAD SWITCH.
REF	DUPLEX RECEPTACLE. (REFRIGERATOR MOUNT AT 42" UNLESS NOTED OTHERWISE).	S_M	MOTOR RATED SWITCH.
TC	DUPLEX RECEPTACLE. (TIME CLOCK COORDINATE MOUNTING REQUIREMENTS WITH TELECOMMUNICATIONS PLANS).	T	TRANSFORMER.
VM	DUPLEX RECEPTACLE. (VENDING MACHINE , MOUNT AT 42" UNLESSNOTED OTHERWISE, COORDINATE EXACT RECEPTACLE CONFIGURATION WITHSUPPLIED VENDING EQUIPMENT). PROVIDE GFCI TYPE CIRCUIT BREAKER.		SURFACE MOUNTED PANEL BOARD
WC	DUPLEX RECEPTACLE. (WATER COOLER GFI RECEPTACLE).		RECESSED MOUNTED PANEL BOARD
	208 VOLT, 2 POLE, RECEPTACLE AMP RATING AS SHOWN ON PLAN. (18" A.F.F. UNLESS NOTED OTHERWISE)		CONTROLLED BRANCH CIRCUIT WIRING.
	208 VOLT, 3 POLE, RECEPTACLE AMP RATING AS SHOWN ON PLAN. (18" A.F.F. UNLESS NOTED OTHERWISE)	E	EMERGENCY CONTROLLED BRANCH CIRCUIT, WIRING INSTALLED PER NEC 700.
	SURFACE RACEWAY.		BRANCH CIRCUIT WIRING.
J	JUNCTION BOX	E	EMERGENCY BRANCH CIRCUIT, WIRING INSTALLED PER NEC 700.
J	JUNCTION BOX WITH FLEXIBLE CONNECTION TO EQUIPMENT		HOME RUN.
	ELECTRICAL CONNECTION POINT	E	EMERGENCY BRANCH CIRCUIT HOME RUN, WIRING INSTALLED PER NEC 700.
		TL	L5-20A LOCKING DUPLEX RECEPTACLE & FLUSH RECEPTACLE.

NOTE:

NOT ALL SYMBOLS MAY APPEAR ON THE DRAWINGS.

Architecture
Engineering
Environmental
Land Surveying
BL Companies

355 Research Parkway
Meriden, CT 06450
(203) 630-1406
(203) 630-2615 Fax

PAWTUCKET-CENTRAL FALLS TRANSIT CENTER
300 PINE STREET PAWTUCKET, RI

REVISIONS

NO	DATE	DESCRIPTION

Designed:	PJS
Drawn:	PJS
Reviewed:	BP/GM
Project No.:	2301115
Date:	04/09/2024

Issued for:
CONSTRUCTION DOCUMENTS

Title:
ELECTRICAL NOTES, SYMBOL LEGEND, & ABBREVIATIONS

Sheet No.
E001.1

4/10/2024 10:30:57 AM C:\Users\PShah\Documents\2301115_RIPTA_PassengerFacility_R23_MEP_pshahQESY4.rvt

© 2022 BL COMPANIES, INC. THESE DRAWINGS SHALL NOT BE UTILIZED BY ANY PERSON, FIRM OR CORPORATION WITHOUT THE SPECIFIC WRITTEN PERMISSION OF BL COMPANIES.

COMcheck Software Version COMcheckWeb

Interior Lighting Compliance Certificate

Project Information

Energy Code: 2018 IECC
Project Title: 2301115 PAWTUCKET-CENTRAL FALLS TRANSIT CENTER Copy 2
Project Type: New Construction

Construction Site:
300 PINE STREET
PAWTUCKET, Rhode Island 02860

Owner/Agent:
RHODE ISLAND PUBLIC TRANSIT AUTHORITY
705 ELMWOOD AVE
PROVIDENCE, Rhode Island 02907

Designer/Contractor:
Luana Andreianu
BL Companies
2346 Post Road Suite 100
Warwick, Rhode Island 02886
4015932039
landreianu@blcompanies.com

Additional Efficiency Package(s)

Credits: 1.0 Required 0.0 Proposed

Allowed Interior Lighting Power

A Area Category	B Floor Area (ft2)	C Allowed Watts / ft2	D Allowed Watts
1-Transportation	2291	0.61	1398
		Total Allowed Watts =	1398

Proposed Interior Lighting Power

A Fixture ID : Description / Lamp / Wattage Per Lamp / Ballast	B Lamps/ Fixture	C # of Fixture	D Fixture Watt.	E (C X D)
1-Transportation				
LED: A/AE: 2X2 LED TROFFER: Other:	1	6	37	222
LED: B/BE: 4' RECESSED DOWNLIGHT: Other:	1	10	12	120
LED: B1: 4" RECESSED DOWNLIGHT: Other:	1	2	18	36
LED: B2/B2E: 4" RECESSED DOWNLIGHT: Other:	1	2	25	50
LED: C/CE: 4' LINEAR LED STRIPLIGHT: Other:	1	20	35	700
LED: E: 4' LINEAR LED STRIPLIGHT: Other:	1	3	39	117
			Total Proposed Watts =	1245

Interior Lighting PASSES: Design 11% better than code

Interior Lighting Compliance Statement

Compliance Statement: The proposed interior lighting design represented in this document is consistent with the building plans, specifications, and other calculations submitted with this permit application. The proposed interior lighting systems have been designed to meet the 2018 IECC requirements in COMcheck Version COMcheckWeb and to comply with any applicable mandatory requirements listed in the Inspection Checklist.

Name - Title _____ Signature _____ Date _____

COMcheck Software Version COMcheckWeb

Exterior Lighting Compliance Certificate

Project Information

Energy Code: 2018 IECC
Project Title: 2301115 PAWTUCKET-CENTRAL FALLS TRANSIT CENTER
Project Type: New Construction
Exterior Lighting Zone 3 (Other (LZ3))

Construction Site:
300 PINE STREET
PAWTUCKET, Rhode Island 02860

Owner/Agent:
RHODE ISLAND PUBLIC TRANSIT AUTHORITY
705 ELMWOOD AVE
PROVIDENCE, Rhode Island 02907

Designer/Contractor:
Luana Andreianu
BL Companies
2346 Post Road Suite 100
Warwick, Rhode Island 02886
4015932039
landreianu@blcompanies.com

Allowed Exterior Lighting Power

A Area/Surface Category	B Quantity	C Allowed Watts /	D Tradable Wattage	E Allowed Watts (B X C)
Walkway >= 10 feet wide	238 ft2	0.11	Yes	26
		Total Tradable Watts (a) =		26
		Total Allowed Watts =		26
		Total Allowed Supplemental Watts (b) =		500

(a) Wattage tradeoffs are only allowed between tradable areas/surfaces.
(b) A supplemental allowance equal to 500 watts may be applied toward compliance of both non-tradable and tradable areas/surfaces.

Proposed Exterior Lighting Power

A Fixture ID : Description / Lamp / Wattage Per Lamp / Ballast	B Lamps/ Fixture	C # of Fixture	D Fixture Watt.	E (C X D)
Walkway >= 10 feet wide (238 ft2): Tradable Wattage				
LED: K: 30" SCONE: Other:	1	4	40	160
LED: F: EXTERIOR WALL PACK: Other:	1	3	70	210
LED: SL: EXTERIOR WALL PACK: Other:	1	2	42	84
		Total Tradable Proposed Watts =		454

Exterior Lighting PASSES: Design 14% better than code

Exterior Lighting Compliance Statement

Compliance Statement: The proposed exterior lighting design represented in this document is consistent with the building plans, specifications, and other calculations submitted with this permit application. The proposed exterior lighting systems have been designed to meet the 2018 IECC requirements in COMcheck Version COMcheckWeb and to comply with any applicable mandatory requirements listed in the Inspection Checklist.

Name - Title _____ Signature _____ Date _____

ELECTRICAL GENERAL NOTES

1. ALL ELECTRICAL WORK SHALL BE PERFORMED IN ACCORDANCE WITH AND SHALL CONFORM IN ALL ASPECTS TO THE NATIONAL ELECTRICAL CODE (NFPA CODES & LOCAL BUILDING CODES).
2. ALL PERMITS, LICENSES AND CERTIFICATES COVERING THE COMPLETE INSTALLATION OF THE ELECTRICAL WORK SHALL BE OBTAINED AND PAID FOR BY THE ELECTRICAL CONTRACTOR
3. ALL CORE-BORING, BACKFILLING AND RESURFACING REQUIRED FOR THE ELECTRICAL WORK SHALL BE PROVIDED BY THE ELECTRICAL CONTRACTOR.
4. ALL CUTTING PATCHING AND REFINISHING OF WALLS, FLOORS & CEILINGS REQUIRED FOR THE ELECTRICAL WORK SHALL BE PROVIDED FOR BY THE ELECTRICAL CONTRACTOR.
5. THESE DRAWINGS ARE DIAGRAMMATIC ONLY; EXACT LOCATIONS OF ALL CONDUIT, ETC. MUST BE FIELD DETERMINED AND RUN TO AVOID OBSTRUCTIONS AND MECHANICAL EQUIPMENT.
6. UNLESS OTHERWISE NOTED, MINIMUM WIRE SIZE SHALL BE #12 AWG, THWN OR THHN COPPER; MINIMUM CONDUIT SIZE SHALL BE 3/4"C. UNLESS OTHERWISE SPECIFIED 20A, 120/208V AND 277/480V BRANCH CIRCUIT WIRING SHALL BE 3#12 AND #12G.
7. ALL WIRING SHALL BE CONCEALED AND RUN IN WALLS OR ABOVE CEILINGS. WIRE MOLDING AND EXPOSED CONDUIT IS NOT PERMITTED.
8. WORK NOT INCLUDED IN CONTRACT ('N.I.C.'); ANY WIRING OR EQUIPMENT NOT TO BE FURNISHED BY CONTRACTOR SHALL BE INDICATED ON PLANS AS N.I.C.
9. SITE VISITATION - PRIOR TO SUBMITTING A BID FOR HIS WORK, THE CONTRACTOR SHALL VISIT THE SITE TO INSPECT THE NATURE AND EXTENT OF THE EXISTING CONDITIONS AND EQUIPMENT, AND DETERMINE HOW THEY WILL AFFECT THE INSTALLATION OF ELECTRICAL WORK. NO ADDITIONAL PAYMENT IN EXCESS OF THE CONTRACT PRICE WILL BE AUTHORIZED FOR "EXTRA" WORK PERFORMED DUE TO EXISTING CONDITIONS WHICH ARE OBVIOUS UPON INSPECTION.
10. STEEL JACKETED METAL CLAD CABLE, "MC CABLE" IS ACCEPTABLE ON THIS PROJECT AND MAY BE USED AS APPROVED BY NEC, WHERE RUN CONCEALED IN WALLS, ABOVE CEILINGS, OR IN BASEMENTS.
11. ALL UNUSED CONDUIT AND WIRING SHALL BE DROPPED TO THE FLOOR BY THE ELECTRICIAN FOR REMOVAL FROM THE BUILDING BY THE CONTRACTOR.
12. ALL EQUIPMENT AND DEVICES SHALL BE NEW & BEAR U.L. LABEL. ALL DEVICES SHALL BE "SPECIFICATION" GRADE.
13. WORKMANSHIP: ONLY THE BEST IN WORKMANSHIP IN ACCORDANCE WITH PRESENT STANDARDS WILL BE ACCEPTABLE. ANY WORK INSTALLED AND ADJUDGED BY THE ENGINEER TO BE BELOW STANDARDS SHALL BE TAKEN OUT AND REPLACED WITH PROPERLY DONE WORK AT CONTRACTOR'S EXPENSE.
14. GUARANTEE: CONTRACTOR SHALL GUARANTEE ALL EQUIPMENT AND WIRING TO BE FREE FROM INHERENT MECHANICAL AND ELECTRICAL DEFECTS FOR A PERIOD OF ONE YEAR FROM DATE OF SUBSTANTIAL COMPLETION OF PROJECT. ALL DEFECTS SHALL BE REPAIRED, DURING THIS PERIOD, AT NO CHARGE TO OWNER (MISUSE OR ABUSE CAUSED PROBLEMS EXCEPTED).
15. SUBSTITUTIONS OF EQUIPMENT: SPECIFIED PRODUCTS SHALL BE USED AS THE BASIS OF BID AND SHALL BE PROVIDED; WHERE 2 OR MORE MANUFACTURERS ARE LISTED, THE CHOICE IS AT THE CONTRACTOR'S OPTION. AN APPROVED EQUAL SHALL BE DETERMINED BY ENGINEER.
16. ALL 15A/20A, 120V HOMERUNS GREATER THAN 75' SHALL BE #10AWG MINIMUM; GREATER THEN 120' SHALL BE #8AWG MINIMUM. EC SHALL PERFORM VOLTAGE DROP CALCULATIONS FOR BRANCH CIRCUITS LONGER THAN SPECIFIED ABOVE AS PER NEC.
17. CONTRACTOR SHALL FIELD VERIFY NAMEPLATE LOADS OF ALL EQUIPMENT (MECHANICAL AND OWNER SUPPLIED) TO INSURE PROPER WIRE SIZING AND OVERCURRENT PROTECTION AND SHALL NOTIFY ENGINEER OF DISCREPANCIES.
18. CONTRACTOR SHALL SEAL ALL ELECTRICAL PENETRATIONS THRU FIRE RATED PARTITIONS WITH FIRE RATED MATERIAL EQUAL TO DOW CORNING SILICONE RTV FOAM AS A MINIMUM. MATERIAL SELECTION SHALL BE BASED ON RATING OF PARTITION PENETRATED.
19. ALL SUPPLEMENTARY STEEL REQUIRED FOR ELECTRICAL WORK SHALL BE PROVIDED BY THE CONTRACTOR.
20. CONTRACTOR SHALL COORDINATE WITH SITE SPECIFIC LOCAL REQUIREMENTS FOR SEISMIC BRACING OF ELECTRICAL EQUIPMENT AND CONDUITS.
21. CONTRACTOR SHALL COORDINATE SITE SPECIFIC CIVIL REQUIREMENTS FOR ANY CIVIL SPECIFIED EQUIPMENT THAT MAY REQUIRE ELECTRICAL POWER, (I.E. PUMPS, LIFT STATIONS, ETC.)
22. CONTRACTOR SHALL COORDINATE INSTALLATION OF ELECTRICAL WORK ABOVE THE CEILING TO PROVIDE THE GREATEST POSSIBLE CLEARANCE FOR INSTALLATION OF PLUMBING AND MECHANICAL INSTALLATION. CONDUIT RUNS TO BE THROUGH OR ABOVE TRUSSES WHERE POSSIBLE.
23. ELECTRICAL CONTRACTOR TO COORDINATE EXACT PLACEMENT OF ALL DEVICES SHOWN ON THE ELECTRICAL CONSTRUCTION DOCUMENTS WITH ARCHITECTURAL, MECHANICAL AND PLUMBING DRAWINGS PRIOR TO FINAL PLACEMENT.
24. ALL WIRE IN CEILING MUST BE PLENUM RATED.
25. NO TELEPHONE WIRE SHALL BE RUN EXPOSED ON BASEBOARDS OR WALLS.
26. WIRING FOR LOW VOLTAGE SYSTEMS SHALL BE RUN CONCEALED WITHIN WALLS AND ABOVE CEILINGS.
27. PANEL DIRECTORIES SHALL BE COMPLETELY FILLED IN AT COMPLETION OF JOB PER NEC 408.4. (TYPED).
28. CONTRACTOR MUST PRODUCE A LETTER ATTESTING THAT WORK HAS BEEN COMPLETED TO THE SATISFACTION OF THE BUILDING MANAGER WHO WILL CONFIRM HIS ACCEPTANCE BY AFFIXING HIS SIGNATURE TO THE LETTER IN A SPACE PROVIDED FOR THIS PURPOSE. WORK WILL NOT BE CONSIDERED AS BEING COMPLETE WITHOUT THIS LETTER.
29. HANGING OF LIGHT FIXTURES IS TO BE DONE IN ACCORDANCE WITH THE NATIONAL ELECTRICAL CODE, STATE AND LOCAL BUILDING CODES AND SEISMIC REQUIREMENTS.
30. AT THE COMPLETION OF THE JOB, IT WILL BE THE ELECTRICAL CONTRACTOR'S RESPONSIBILITY TO TURN OVER TO THE BUILDING MANAGER AN AS-BUILT-DRAWING IN REPRODUCIBLE FORM. THIS DRAWING DOES NOT HAVE TO BE MADE FROM SCRATCH; THE CONTRACT REFLECTED CEILING AND POWER PLANS MAY BE USED AS BACKGROUNDS WITH THE ACTUAL CIRCUITING CHANGES ADDED.
31. PRIOR TO THE CONTRACTOR BEING RELEASED FROM ALL OBLIGATIONS, HE WILL OBTAIN AND TURN OVER TO THE BUILDING MANAGER THE ORIGINAL COPY OF THE "CERTIFICATE OF ELECTRICAL INSPECTION".
32. COORDINATE EXACT LOCATIONS AND MOUNTING HEIGHTS OF EQUIPMENT AND DEVICES WITH ARCHITECT.
33. WIRING SHALL BE WITH COPPER CONDUCTORS UNLESS OTHERWISE NOTED.
34. LOCATIONS AND QUANTITIES OF EQUIPMENT HAVE BEEN BASED ON THE LATEST COMPOSITE PROVIDED BY THE CLIENT.
35. WHERE CONFLICT EXISTS BETWEEN DRAWINGS OR BETWEEN DRAWINGS AND SPECIFICATIONS, THE MOST RESTRICTIVE, THE MOST EXPENSIVE REQUIREMENT SHALL APPLY.
36. THE ELECTRICAL CONTRACTOR CAN USE THE NEWLY INSTALLED PANELS AND CONDUITS WHEREVER SUITABLE. INFORM THE ARCHITECT/ENGINEER BEFORE PROCEEDING WITH THE WORK.
37. CONTRACTOR SHALL FURNISH AND INSTALL INFRASTRUCTURE FOR ALL TELECOM EQUIPMENT AND TELECOM DEVICES. REFER TO TELECOMMUNICATIONS AND SECURITY DRAWINGS FOR REQUIREMENTS. REFER TO DETAIL TEL/COM CONDUIT/JUNCTION BOX DETAIL FOR OFFICE BLOCK RECESSED TEL/COM DEVICE CONDUIT/J-BOX INSTALLATION.
38. IN ADDITION TO SURFACE RACEWAY AND/OR FLOOR MOUNTED OUTLET BOXES AND POWER POLES INDICATED ON ELECTRICAL DRAWINGS, THE ELECTRICAL CONTRACTOR WILL PROVIDE ALL CABLE TRAY AND FLUSH MOUNTED OUTLET BOXES/BACK BOXES AND ASSOCIATED CONDUIT FOR ALL TELECOMMUNICATIONS OUTLETS (INCLUDING PA/MASTER CLOCK/SOUND SYSTEMS, CATV/VIDEO SYSTEMS, AND SECURITY SYSTEMS) ON THE PROJECT. THE CONTRACTOR WILL REFERENCE THE TELECOMMUNICATIONS AND SECURITY DRAWINGS ('T" AND 'S' DRAWINGS) FOR CABLE TRAY AND OUTLET/DEVICE LOCATIONS, AND ALL INSTALLATION DETAILS SHOWN ON THE 'T' AND 'S' DRAWINGS. THE CONTRACTOR WILL ALSO REFERENCE THE TELECOMMUNICATIONS DRAWINGS FOR EMBEDDED CONDUIT REQUIRED FOR IN-FLOOR BOXES THAT ARE SHOWN ON THE'T' DRAWINGS, AND THE CONTRACTOR WILL PROVIDE THE EMBEDDED CONDUITS AS SHOWN ON THE 'T' DRAWINGS.
39. THE ELECTRICAL CONTRACTOR WILL REFERENCE THE TELECOMMUNICATIONS DRAWINGS FOR ANY UNDERGROUND SITE WORK AND WILL PROVIDE ALL UNDERGROUND CONDUITS, DUCTBANKS, HANDHOLES, MANHOLES, AND UNDERGROUND PENETRATIONS AS SHOWN ON THE 'T' DRAWINGS. CONTRACTOR WILL PROVIDE ALL EXCAVATION, BACKFILLING AND SURFACE RESTORATION REQUIRED FOR THE SITE WORK.
40. THE FOLLOWING WILL BE PROVIDED BY THE ELECTRICAL CONTRACTOR FOR PROJECTS WHERE THE TELECOM CONTRACT IS UNDER ELECTRICAL. WHERE THE TELECOM AND ELECTRICAL CONTRACTS ARE SEPARATE THE FOLLOWING WILL BE PROVIDED BY THE TELECOMMUNICATIONS CONTRACTOR: TELECOMMUNICATIONS STRUCTURED CABLING SYSTEMS, TELECOMMUNICATIONS OUTLET DEVICES/FACEPLATES/JACKS, DATA NETWORK SYSTEMS PBX/TELEPHONE SYSTEMS, CONDUIT SLEEVES, PENETRATIONS FOR CONDUIT SLEEVES, FIRESTOPPING, CABLE RUNWAY (IN IDF'S AND MDF'S), AND PLYWOOD BACKBOARDS
41. ALL CONDUIT IN WAREHOUSE TO BE GRS UP TO 10'-0" AFF, EMT ABOVE 10'-0" AFF.
42. COORDINATE LUMINAIRE LOCATIONS WITH THE ARCHITECTURAL REFLECTED CEILING PLANS.
43. REFER TO THE ARCHITECETURAL DRAWINGS FOR THE LOCATIONS OF THE FOLLOWING:
    a. ALL FIRE RATED PARTITIONS AND BUILDING EXPANSION JOINTS.
    b. MOUNTING HEIGHTS OF EQUIPMENT.
44. REFER TO THE HVAC DRAWINGS FOR THE LOCATIONS OF THE FOLLOWING:
    a. MECHANICAL EQUIPMENT, CONTROL PANELS AND MOTORS.
    b. AUTOMATIC TEMPERATURE CONTROL SYSTEM PANELS AND DEVICES.
    c. DUCT MOUNTED SMOKE DETECTORS.
    d. MOTORIZED DAMPERS AND CONTROL VALVES.
45. REFER TO THE PLUMBING DRAWINGS FOR THE LOCATIONS OF THE FOLLOWING:
    a. ELECTRIC WATER HEATERS.
    b. ELECTRIC FLUSH VALVES.
46. REFER TO THE APPROPRIATE VENDORS APPROVED DIMENSIONED LAYOUT DRAWINGS FOR THE LOCATIONS OF THE FOLLOWING:
    a. CONDUIT CONNECTIONS TO FURNITURE AND PREFABRICATED MILLWORK.
    b. POWER AND CONTROL WIRING FOR ELECTRICALLY OPERATED DOORS.
47. PLANS ARE DESIGNED IN ACCORDANCE WITH THE 2020 NATIONAL ELECTRIC CODE.
48. PLANS ARE DESIGNED IN ACCORDANCE WITH 2018 IECC WITH LOCAL AMENDMENTS:
49. CONTRACTOR SHALL PROVIDE A RADIO MASTER BOX SYSTEM WHERE DEEMED NECESSARY BY THE LOCAL AHJ DURING CONSTRUCTION.
50. ALL PRODUCTS AND MATERIALS SHALL BE PROCURED UNDER 'BUY AMERICAN' INITIATIVE.

A. VOLTAGE DROP: THE CONTRACTOR SHALL BE RESPONSIBLE TO ADJUST SPECIFIED FEEDER AND BRANCH CIRCUIT REQUIREMENTS BASED ON THE FOLLOWING:

1. FEEDERS SHALL BE SIZED FOR 2% VOLTAGE DROP, AND BRANCH CIRCUITS SHALL BE SIZED FOR 3% VOLTAGE DROP.
2. THE CONTRACTOR SHALL UTILIZE THE AS-BUILT LENGTHS FOR THE FEEDERS AND BRANCH CIRCUITS WHEN CALCULATING ASSOCIATED VOLTAGE DROP.
3. THE FEEDER AMPERES SHALL BE BASED ON THE FULL LOAD AMPERES OF THE UTILIZATION EQUIPMENT SERVED.
4. THE FEEDER AMPERES FOR PANELBOARDS SHALL BE BASED ON 80% OF THE TRIP SETTING FOR THAT PANELBOARD.
5. WIRING FOR LIGHTING AND RECEPTACLE BRANCH CIRCUITS SHALL BE SIZED IN ACCORDANCE WITH ELECTRICAL GENERAL NOTE 16 ON E0.01.
6. THE CONTRACTOR SHALL BE RESPONSIBLE FOR INCREASING THE SIZE OF THE FEEDER AND/OR BRANCH CIRCUIT WIRING, AND ASSOCIATED CONDUIT AS REQUIRED TO MEET THE ABOVE VOLTAGE DROP REQUIREMENTS.
7. THE CONTRACTOR SHALL BE RESPONSIBLE TO INCREASE THE SIZE OF THE EQUIPMENT GROUND CONDUCTOR, FOR FEEDERS AND/OR BRANCH CIRCUITS INCREASED IN SIZE DUE TO VOLTAGE DROP (AND/OR OTHER ADJUSTMENT REASONS), IN ACCORDANCE WITH NEC 250.122(B).
8. THE CONTRACTOR SHALL SUBMIT A SHOP DRAWING FOR THE FEEDERS INCREASED IN SIZE DUE TO VOLTAGE DROP FOR REVIEW AND APPROVAL. THE SHOP DRAWING SHALL INDICATE THE FEEDER AMPERES, THE FEEDER SIZE, THE CONDUIT SIZE, AND THE CALCULATED PERCENT VOLTAGE DROP.

B. LOAD BALANCING: AFTER SUBSTANTIAL COMPLETION, BUT NOT MORE THAN 60 DAYS AFTER FINAL ACCEPTANCE, MEASURE LOAD BALANCING AND MAKE CIRCUIT CHANGES. PRIOR TO MAKING CIRCUIT CHANGES TO ACHIEVE LOAD BALANCING, INFORM ARCHITECT OF EFFECT ON PHASE COLOR CODING.

1. MEASURE LOADS DURING PERIOD OF NORMAL FACILITY OPERATIONS.
2. PERFORM CIRCUIT CHANGES TO ACHIEVE LOAD BALANCING OUTSIDE NORMAL FACILITY OPERATION SCHEDULE OR AT TIMES DIRECTED BY THE ARCHITECT. AVOID DISRUPTING SERVICES SUCH AS FAX MACHINES AND ON-LINE DATA PROCESSING, COMPUTING, TRANSMITTING, AND RECEIVING EQUIPMENT.
3. AFTER CHANGING CIRCUITS TO ACHIEVE LOAD BALANCING, RECHECK LOADS DURING NORMAL FACILITY OPERATIONS. RECORD LOAD READINGS BEFORE AND AFTER CHANGING CIRCUITS TO ACHIEVE LOAD BALANCING.
4. TOLERANCE: MAXIMUM DIFFERENCE BETWEEN PHASE LOADS, WITHIN A PANELBOARD, SHALL NOT EXCEED 20 PERCENT.

INFORMATION IN THESE PLANS ARE PROVIDED FOR REFERENCE ONLY. CONTRACTOR SHALL OBTAIN A FULL COPY OF THE "2021 IT INFRASTRUCTURE DESIGN V9.4" MANUAL TO REVIEW ALL REQUIREMENTS AND RESPONSIBILITIES OF THE CONTRACTOR PRIORTO THE START OF ANY WORK. FAILURE TO REVIEW THIS FULL DOCUMENT DOES NOT EXCUSE THE CONTRACTOR FROM SUPPLYING ANY EQUIPMENT OR LABOR AS DEFINED IN THE DESIGN GUIDELINE COORDINATE ALL EXPECTED SCOPE WITH GENERAL CONTRACTOR PRIOR TO ORDERING OR START OF ANY WORK.

SIESMIC NOTE:

ALL ELECTRICAL EQUIPMENT AND DISTRIBUTION SYSTEMS SHALL BE PROVIDED WITH SEISMIC RESTRAINTS FOR THE SEISMIC DESIGN CATEGORY IN WHICH THE BUILDING IS LOCATED (SEE STRUCTURAL DRAWINGS) AND IMPORTANCE FACTOR (SEE SPECIFICATIONS) IN ACCORDANCE WITH ADOPTED CODES. DESIGN OF SYSTEM AND ALL SUBMITTAL DATA TO INCLUDE SEISMIC CALCULATIONS CERTIFIED AND SEALED BY A PROFESSIONAL ENGINEER LICENSED IN THE STATE OF PROJECT LOCATION AND EMPLOYED BY THE SEISMIC RESTRAINT MANUFACTURER. SHOP DRAWINGS OF ALL SEISMIC RESTRAINTS SHALL BE SUBMITTED FOR APPROVAL. SEISMIC RESTRAINTS SHALL BE BY MASON INDUSTRIES INC. OR AN APPROVED EQUAL. INSPECTION OF ALL SEISMIC RESTRAINTS SHALL BE COMPLETED AND ACCOMPANYING CERTIFICATION OF INSTALLATION SHALL BE PROVIDED BY MANUFACTURER'S APPROVED REPRESENTATIVE. SEE SPECIFICATIONS FOR ADDITIONAL INFORMATION.

Architecture Engineering Environmental Land Surveying
BL Companies
355 Research Parkway
Meriden, CT 06450
(203) 630-1406
(203) 630-2615 Fax

PAWTUCKET-CENTRAL FALLS TRANSIT CENTER
300 PINE STREET PAWTUCKET, RI

REVISIONS

NO	DATE	DESCRIPTION

Designed: Designer
Drawn: Author
Reviewed: Approver
Project No.: 2301115
Date: 04/09/2024
Issued for: CONSTRUCTION DOCUMENTS

Title: ELECTRICAL NOTES, SYMBOL LEGEND, & ABBREVIATIONS

Sheet No. E001.2

4/10/2024 10:30:58 AM C:\Users\PShah\Documents\2301115_RIPTA_PassengerFacility_R23_MEP_pshahQE5Y4.rvt

© 2022 BL COMPANIES, INC. THESE DRAWINGS SHALL NOT BE UTILIZED BY ANY PERSON, FIRM OR CORPORATION WITHOUT THE SPECIFIC WRITTEN PERMISSION OF BL COMPANIES.

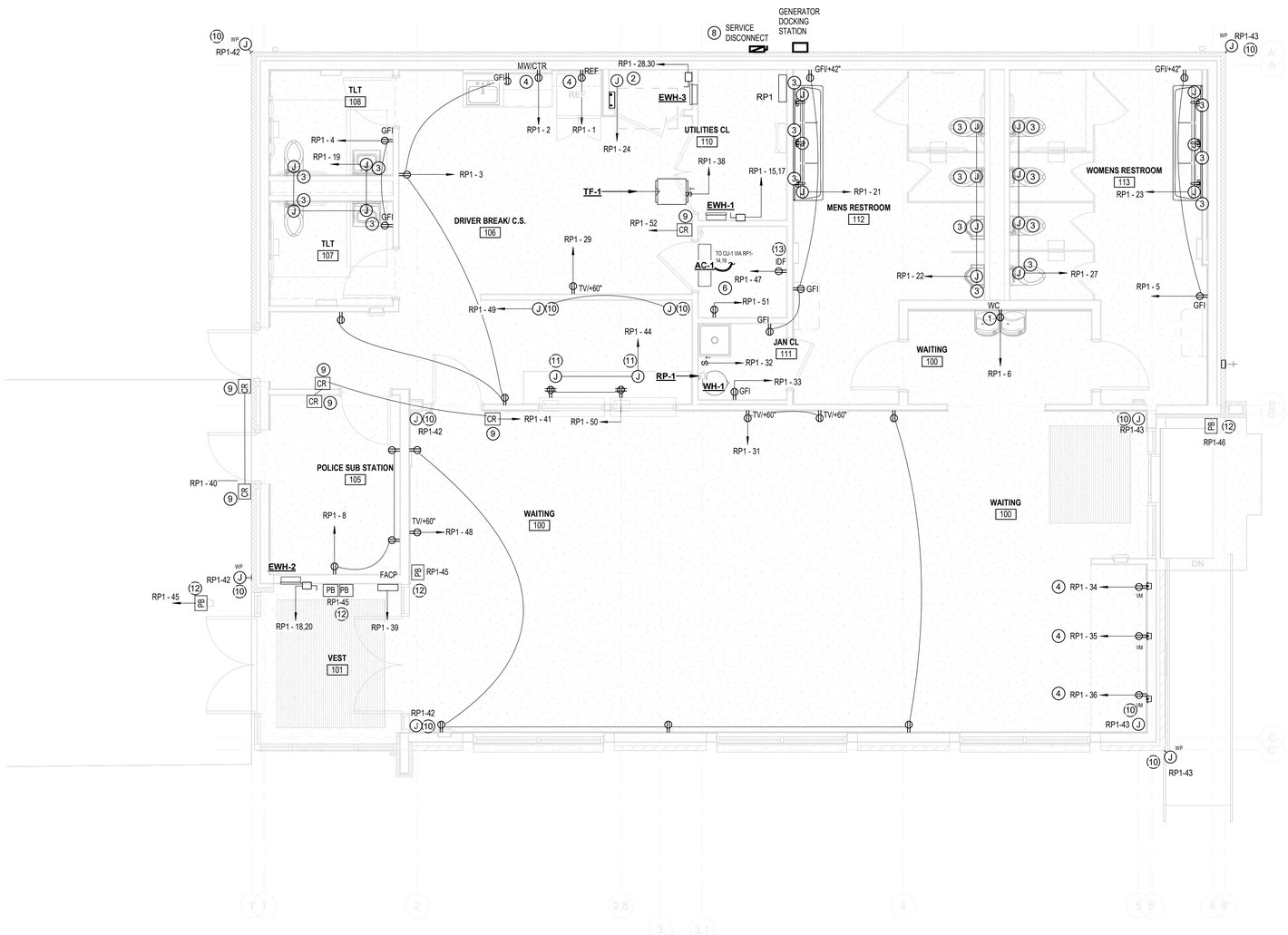

1 ELECTRICAL POWER PLAN - OVERALL

1/4" = 1'-0"

POWER PLAN GENERAL NOTES:

(NOT ALL NOTES ARE INDICATED ON FLOOR PLAN)

1. ACCESS TO & CLEARANCES AROUND ELECTRICAL EQUIPMENT SHALL CONFORM TO N.E.C. ARTICLES 110. CONSULT ENGINEER WHERE SPACE APPEARS INADEQUATE DUE TO ARCHITECTURAL CHANGES, EQUIPMENT LAYOUT CHANGES, OR FIELD CONDITIONS. DO NOT COVER, OBSCURE OR BLOCK ACCESS TO EQUIPMENT, DATA PLATES, ACCESS PANELS OR MAINTENANCE AREAS WITH THE ELECTRICAL WORK. PROVIDE BOLLARDS OR BARRIER TO PROTECT ELECTRICAL PANELS, MINIMUM 3'-6" CLEARANCE FROM PANELS.
2. THIS DRAWING SHOWS EQUIPMENT LOCATIONS ONLY. WIRING SHOWN IS SCHEMATIC IN NATURE. REFER TO RISERS, & DETAILS FOR ALL REQUIRED POWER & CONTROL WIRING. COORDINATE CONDUIT ROUTE IN FIELD WITH OTHER TRADES, EQUIPMENT & OWNER. VERIFY ALL MOUNTING HEIGHTS WITH OWNER & ARCHITECT PRIOR TO INSTALLATION.
3. UNLESS NOTED OTHERWISE, ALL HOMERUNS SHOWN ARE 3/4"C., 2#12, 1#12G. TO 20A-1P C/B IN PANEL LISTED.
4. UNLESS NOTED OTHERWISE, ALL POWER WIRING OF CIRCUIT SHALL MATCH HOMERUN WIRING OF CIRCUIT. MINIMUM POWER WIRING SHALL BE 3/4"C., 2#12 & 1#12G. MINIMUM CONTROL WIRING SHALL BE 3/4"C., 2#14.
5. COORDINATE WITH MECHANICAL PLANS FOR FINAL LOCATION OF ALL EQUIPMENT AND DEVICES MOUNTED ON OR IN THE VICINITY OF THE MECHANICAL WORK.
6. RECEPTACLES LOCATED WITHIN SIX (6) FEET OF A SINK OR A WATER SOURCE AND WET LOCATION SHALL HAVE GROUND FAULT PROTECTION.
7. COORDINATE EXACT LOCATION OF ALL DEVICES WITH OWNER AND TRADES PRIOR TO INSTALLATION.
8. COORDINATE ELECTRICAL REQUIREMENTS OF ALL MECHANICAL EQUIPMENT WITH APPROVED MANUFACTURER'S SHOP DRAWINGS PRIOR TO INSTALLATION.
9. COORDINATE ELECTRICAL REQUIREMENTS OF ALL OWNER PROVIDED EQUIPMENT WITH ACTUAL EQUIPMENT PRIOR TO INSTALLATION.
10. REFER TO THE GENERAL NOTES FOR WIRING INFORMATION FROM DEVICE.
11. REFER TO MECHANICAL EQUIPMENT FEEDER SCHEDULE.
12. ALL CONDUIT PENETRATIONS THROUGH WALL MUST BE SEALED SLEEVED, AND PROPERLY SUPPORTED ON EACH SIDE OF THE WALL.

POWER PLAN KEY NOTES:

(NOT ALL KEY NOTES ARE INDICATED ON FLOOR PLAN)

1. PROVIDE RECEPTACLE AT 18" AFF FOR WATER COOLER CONNECTION.PROVIDE A GFI CLASS A BREAKER.
2. PROVIDE POWER FOR TRAP PRIMERS. REFER TO PLUMBING DRAWINGS FOR ADDITIONAL INFORMATION.
3. PROVIDE POWER FOR PLUMBING FIXTURES. REFER TO PLUMBING DRAWINGS AND SCHEDULES FOR ADDTIONAL INFORMATION. REFER TO FIXTURES CUT-SHEET FOR POINT OF CONNECTION. PROVIDE (2) #12 AWG + (1) #12 AWG GND. IN A 3/4"C
4. PROVIDE GFCI CIRCUIT BREAKER IN LIEU OF OUTLET IN A SERVICE PANEL.
5. FURNISH AND INSTALL NEW TEL/COM BACKBOARD. COORDINATE REQUIREMENTS WITH I.T. SYSTEM INSTALLER/ PROJECT CONSTRUCTION MANAGED. BACKBOARD TO BE FIRE-RETARDANT TREATED 3/4" B-C PLYWOOD. PAINTED GRAY ON ALL EXPOSED SIDES.
6. FURNISH AND INSTALL (2) 4" CONDUIT STUBUP FOR FUTURE TELECOM/ SECURITY CONNECTIONS. COORDINATE WITH TENANT FOR ADDITIONAL INFORMATION AND INSTRUCTIONS.
7. LOCATION OF TELECOMMUNICATION GROUND BAR (TGB). COORDINATE WITH TENANT/ IT PROVIDER FOR EXACT LOCATION.
8. LOCATION OF 600 A, 240V, 3-PH 4 WIRE SERVICE RATED DISCONNECT SWITCH. CONNECT THIS DISCONNECT TO SERVICE PANEL RP-1 LOCATED IN ELECTRICAL ROOM. PROVIDE (4) 600 KCMIL + (1) #3 AWG GND IN 4"C. CONNECT THIS DISCONNECT SWITCH TO EXISTING TRANSFORMER LOCATED NEAR RAILWAY STATION. REFER TO DRAWING E604 FOR ADDITIONAL INFORMATION.
9. FURNISH AND INSTALL POWER JUNCTION BOX AND ALL REQUIRED ELECTRICAL CONNECTIONS FOR SECURED DOOR ACCESS CONTROL AND DOOR ALARM. REFER TO TELECOM DRAWINGS FOR ADDITONAL REQUIREMENT AND INSTRUCTIONS.
10. FURNISH AND INSTALL POWER JUNCTION BOX FOR CAMERA INSTALLATION. REFER TO TELECOM DRAWINGS FOR MOUNTING HEIGHT AND ADDITIONAL REQUIREMENT.
11. FURNISH AND INSTALL POWER FOR PANIC HARDWARE PER NEC 110.26 (C)(3). REFER TO TELECOM DRAWINGS FOR ADDITIONAL INFORMATION ABOUT MOUNTING HEIGHT, LOCATION AND POINT OF CONNECTION REQUIREMENTS.
12. FURNISH AND INSTALL POWER JUNCTION BOX FOR POWER DOOR ASSIST SYSTEM. CONTRACTOR SHALL FURNISH AND INSTALL CONDUIT/WIRING AND ALL REQUIRED HARDWARE TO COMPLETE DOOR ASSIST SYSTEM FINAL INSTALLATION. COORDINATE WITH ARCHITECT FOR FINAL LOCATIONS OF DOOR ASSIST PUSH-BUTTONS PRIOR TO ROUGH-IN. REFER TO ARCHITECTURAL DRAWINGS FOR ADDITIONAL REQUIREMENTS.
13. PROVIDE POWER AND CONDUIT FOR IDF CABINET CONNECTIONS. PROVIDE (1) 20A-1P BREAKER.

TRUE NORTH

Architecture
Engineering
Environmental
Land Surveying
BL Companies

355 Research Parkway
Meriden, CT 06450
(203) 630-1406
(203) 630-2615 Fax

PAWTUCKET-CENTRAL FALLS TRANSIT CENTER
300 PINE STREET PAWTUCKET, RI

REVISIONS

NO	DATE	DESCRIPTION

Designed:	PJS
Drawn:	PJS
Reviewed:	BP/GM/CR
Project No.:	2301115
Date:	04/09/2024

Issued for:
CONSTRUCTION DOCUMENTS

Title:
OVERALL ELECTRICAL POWER PLAN

Sheet No.
E101.1

4/10/2024 10:31:01 AM C:\Users\PShah\Documents\2301115_RIPTA_PassengerFacility_R23_MEP_pshahQE5Y4.rvt

© 2022 BL COMPANIES, INC. THESE DRAWINGS SHALL NOT BE UTILIZED BY ANY PERSON, FIRM OR CORPORATION WITHOUT THE SPECIFIC WRITTEN PERMISSION OF BL COMPANIES.

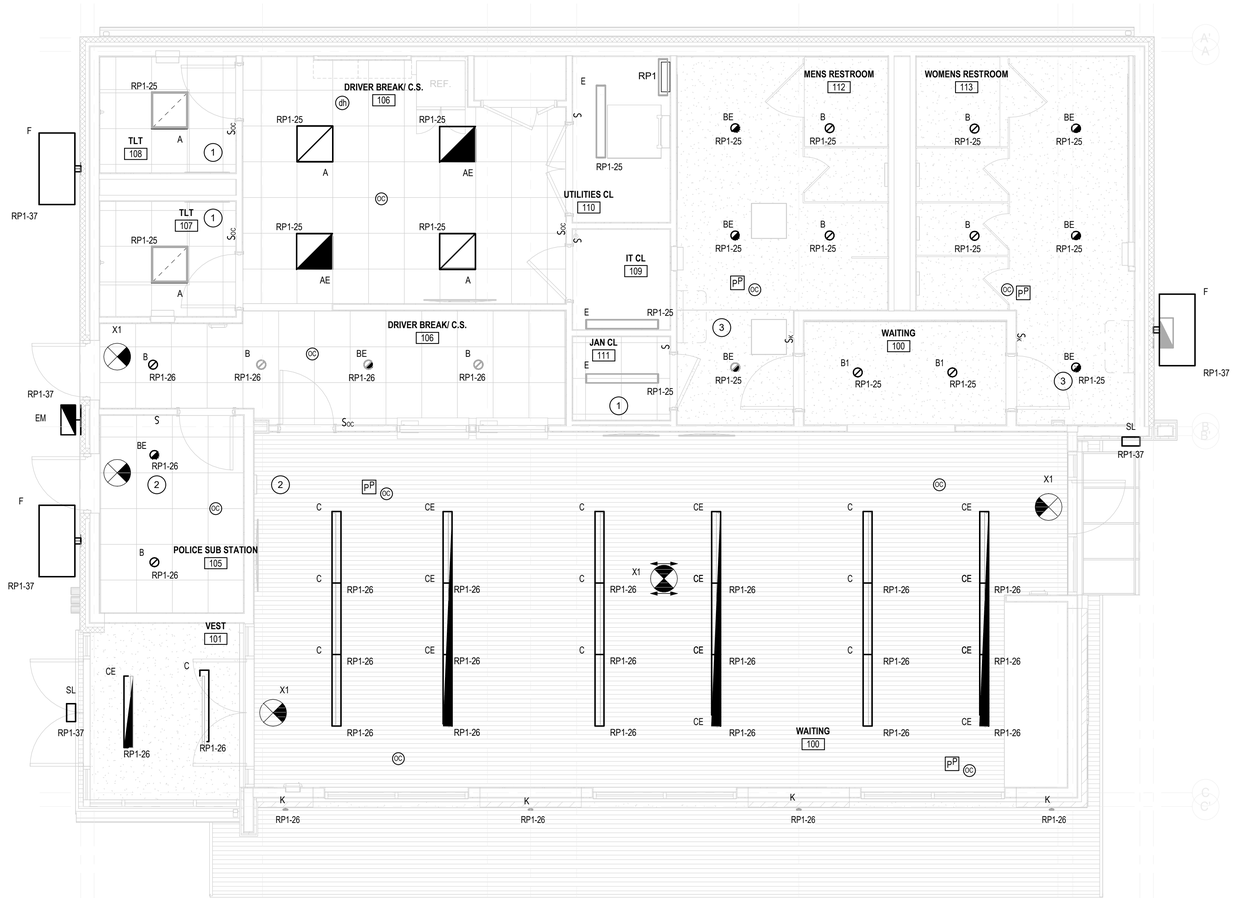

1 ELECTRICAL LIGHTING PLAN - OVERALL

1" = 5'-0"

LIGHTING PLAN KEY NOTES:

(NOT ALL KEY NOTES ARE INDICATED ON FLOOR PLAN)

1. SPACES WITH WALL MOUNTED (SWITCH-TYPE) OCCUPANCY SENSOR CONTROL (TOILETS, AND JANITOR CLOSETS – IECC 2015 C405.2.1);

   • PROVIDE ROOM CONTROLLER IN SPACE FOR LIGHTING CONTROLS. PROVIDE LINE VOLTAGE CONNECTION TO ROOM CONTROLLER.

   • PROVIDE LOW VOLTAGE DIMMING OCCUPANCY SENSOR WALL SWITCH AT ENTRY DOOR. SWITCH SHALL BE SET UP TO REQUIRE MANUAL INPUT FOR ON OPERATION AND AUTOMATIC CONTROL FOR OFF OPERATION, AFTER NO OCCUPANCY IS DETECTED FOR 30 MINUTES. OCCUPANT SHALL BE ABLE TO MANUALLY TURN LIGHTING OFF PER CODE (IECC 2015 C405.2.1.1(3)).

   • CONNECT LIGHT FIXTURE CONTROLS AND LOW VOLTAGE SWITCH TO ROOM CONTROLLER.

2. SPACES WITH CEILING MOUNTED OCCUPANCY SENSOR CONTROL (BREAK ROOMS, OFFICE SPACE - IECC 2015 C405.2.1);

   • PROVIDE ROOM CONTROLLER IN SPACE FOR LIGHTING CONTROLS. PROVIDE LINE VOLTAGE CONNECTION TO ROOM CONTROLLER.

   • PROVIDE LOW VOLTAGE CEILING MOUNTED OCCUPANCY SENSOR WITH DUAL TECHNOLOGY SENSING. SENSOR SHALL BE SET UP TO REQUIRE MANUAL INPUT FOR ON OPERATION AND AUTOMATIC CONTROL FOR OFF OPERATION, AFTER NO OCCUPANCY IS DETECTED FOR 30 MINUTES. QUANTITY AND PLACEMENT TO BE DETERMINED BY MANUFACTURER BASED ON ACTUAL DEVICES UTILIZED.

   • PROVIDE LOW VOLTAGE DIMMING WALL SWITCH AT ENTRY DOOR. OCCUPANT SHALL BE ABLE TO MANUALLY TURN LIGHTING OFF PER CODE (IECC 2015 C405.2.1.1(3)).

   • FOR ANY LIGHT FIXTURES LOCATED IN DAYLIGHT ZONES (REFER TO DAYLIGHT ZONE MAP), PROVIDE LOW VOLTAGE AUTOMATIC DIMMING DAYLIGHT SENSOR TO CONTROL THESE LIGHTS BASED ON THE PRESENCE OF DAYLIGHT. PROVIDE SEPARATE LOW VOLTAGE DIMMING SWITCH TO CONTROL THESE FIXTURES INDEPENDENTLY FROM THE NON-DAYLIGHT ZONE LIGHT FIXTURES. LOCATE SWITCH ADJACENT TO NORMAL LIGHT SWITCH UNDER SINGLE COVER PLATE. EACH DAYLIGHT ZONE WITHIN A SPACE SHALL BE CONTROLLED SEPARATELY.

   • FOR EMERGENCY FIXTURES (DESIGNATED WITH AN EM SUBSCRIPT), CONTROLLED WITH NORMAL LIGHTING AND NOT INTENDED TO BE ON 24/7, PROVIDE EMERGENCY LIGHTING BYPASS RELAY (UL 924 COMPLIANT) TO FORCE LIGHTING TO FULL OUTPUT ONCE IT SENSES A LOSS OF NORMAL POWER.

   • FOR EMERGENCY FIXTURES INTENDED TO BE ON 24/7 (DESIGNATED WITH AN EM/NL SUBSCRIPT), FIXTURES SHALL BYPASS ANY LOCAL LIGHTING CONTROLS.

   • CONNECT LIGHT FIXTURE CONTROLS AND LOW VOLTAGE SWITCHES AND SENSORS TO ROOM CONTROLLER.

3. SPACES WITH CEILING MOUNTED OCCUPANCY SENSOR CONTROL (RESTROOMS, LOBBIES AND CORRIDORS – IECC 2015 CV405.2.1);

   • PROVIDE ROOM CONTROLLER IN SPACE FOR LIGHTING CONTROLS. PROVIDE LINE VOLTAGE CONNECTION TO ROOM CONTROLLER.

   • PROVIDE LOW VOLTAGE CEILING MOUNTED OCCUPANCY SENSOR WITH DUAL TECHNOLOGY SENSING. SENSOR SHALL BE SET UP AUTOMATIC CONTROL FOR ON OPERATION AND AUTOMATIC CONTROL FOR OFF OPERATION, AFTER NO OCCUPANCY IS DETECTED FOR 30 MINUTES. QUANTITY AND PLACEMENT TO BE DETERMINED BY MANUFACTURER BASED ON ACTUAL DEVICES UTILIZED.

   • PROVIDE LOW VOLTAGE KEY WALL SWITCH AT ENTRY DOOR. SWITCH SHALL PROVIDE CODE REQUIRED ON/OFF CONTROL (IECC 2015 C405.2.1.1(3)).

   • FOR EMERGENCY FIXTURES (DESIGNATED WITH AN EM SUBSCRIPT), CONTROLLED WITH NORMAL LIGHTING AND NOT INTENDED TO BE ON 24/7, PROVIDE EMERGENCY LIGHTING BYPASS RELAY (UL 924 COMPLIANT) TO FORCE LIGHTING TO FULL OUTPUT ONCE IT SENSES A LOSS OF NORMAL POWER.

   • FOR EMERGENCY FIXTURES INTENDED TO BE ON 24/7 (DESIGNATED WITH AN EM/NL SUBSCRIPT), FIXTURES SHALL BYPASS ANY LOCAL LIGHTING CONTROLS.

   • CONNECT LIGHT FIXTURE CONTROLS AND LOW VOLTAGE SWITCHES AND SENSORS TO ROOM CONTROLLER.

4. SPACES WITH NO AUTOMATIC LIGHTING CONTROL (WHERE AUTOMATIC SHUTOFF WOULD ENDANGER OCCUPANT SAFETY OR SECURITY – IECC 2015 C405.2.2(3)) AND NO LIGHT REDUCTION CONTROL (ELECTRICAL OR MECHANICAL ROOMS – IECC 2015 C405.2.2.1(EXCEPTIONS 2.3));

   • PROVIDE MANUAL ON/OFF CONTROL AT ENTRY TO SPACE.

   • FOR EMERGENCY FIXTURES (DESIGNATED WITH AN EM SUBSCRIPT), CONTROLLED WITH NORMAL LIGHTING AND NOT INTENDED TO BE ON 24/7, PROVIDE EMERGENCY LIGHTING BYPASS RELAY (UL 924 COMPLIANT) TO FORCE LIGHTING TO FULL OUTPUT ONCE IT SENSES A LOSS OF NORMAL POWER.

   • FOR EMERGENCY FIXTURES INTENDED TO BE ON 24/7 (DESIGNATED WITH AN EM/NL SUBSCRIPT), FIXTURES SHALL BYPASS ANY LOCAL LIGHTING CONTROLS.

5. EMERGENCY LIGHT WITH 90 MINUTE BATTERY. CONNECT TO CIRCUIT SHOWN AHEAD OF LOCAL LIGHITNG CONTROLS.

LIGHTING PLAN GENERAL NOTES:

1. ACCESS TO AND CLEARANCES AROUND ELECTRICAL EQUIPMENT SHALL CONFORM TO N.E.C. ARTICLES 110. CONSULT ENGINEER WHERE SPACE APPEARS INADEQUATE DUE TO ARCHITECTURAL CHANGES, EQUIPMENT LAYOUT CHANGES, OR FIELD CONDITIONS. DO NOT COVER, OBSCURE OR BLOCK ACCESS TO EQUIPMENT, DATA PLATES, ACCESS PANELS OR MAINTENANCE AREAS WITH THE ELECTRICAL WORK.
2. THIS DRAWING SHOWS EQUIPMENT LOCATIONS ONLY. WIRING SHOWN IS SCHEMATIC IN NATURE. REFER TO RISERS & DETAILS FOR ALL REQUIRED POWER & CONTROL WIRING. COORDINATE CONDUIT ROUTE IN FIELD WITH OTHER TRADES, EQUIPMENT & OWNER. VERIFY ALL MOUNTING HEIGHTS WITH OWNER & ARCHITECT PRIOR TO INSTALLATION.
3. UNLESS NOTED OTHERWISE, ALL POWER WIRING OF CIRCUIT SHALL MATCH HOMERUN WIRING OF CIRCUIT. MINIMUM POWER WIRING SHALL BE 3/4"C., 2#12 & 1# 12G., MINIMUM CONTROL WIRING SHALL BE 3/4"C., 2#14. SEE GENERAL NOTE #16 ON DWG. E0.01.
4. COORDINATE WITH MECHANICAL PLANS FOR FINAL LOCATION OF ALL DEVICES MOUNTED ON OR IN THE VICINITY OF THE MECHANICAL WORK.
5. WIRING WITHIN WAREHOUSE SHALL BE INSTALLED FROM DEVICE, UP BUILDING COLUMNS, TO ABOVE BOTTOM OF STEEL IN GRS CONDUIT (EMT ACCEPTABLE 10-FT ABOVE FINISHED FLOOR).
6. COORDINATE EXACT LOCATION OF ALL DEVICES WITH OWNER PRIOR TO INSTALLATION.
7. COORDINATE ELECTRICAL REQUIREMENTS OF ALL OWNER PROVIDED EQUIPMENT WITH ACTUAL EQUIPMENT PRIOR TO INSTALLATION.
8. ALL EXIT SIGNS WITH IN MAIN DISTRIBUTION AREA SHALL BE WIRED TO ITS INTERNAL BATTERY PACK. HOMERUN & BRANCH CIRCUIT WIRING SHALL BE 3/4"C., 2# 12 & 1#12G. PROVIDE AN ALLOWANCE FOR PROVIDING (2) TWENTY ADDITIONAL EXIST SIGNS REQUIRED PER AHJ COMMENTS.
9. ALL OCCUPANCY SENSORS REQUIRE POWER PACKS. ONLY ONE POWER PACK IS USED WHEN SENSORS ARE LINKED.
10. ALL LIGHTS WITHIN THE OFFICE AREA SHALL BE CONTROLLED BY OCCUPANCY SENSOR & WALL MOUNTED LIGHT SWITCH LOCATED WITHIN THE SAME SPACE.
11. ALL LIGHTING FIXTURES WITHIN OFFICE AREA SHALL BE DIMMED. PROVIDE 0-10V LED COMPATIBLE WALL BOX DIMMER & 3-WAY SWITCH AS SHOWN.
12. ALL EMERGENCY LIGHTS WITHIN THE OFFICE BLOCK SHALL BE PROVIDED WITH INTEGRAL BATTERY BACKUP.

TRUE NORTH

Architecture
Engineering
Environmental
Land Surveying
Companies

355 Research Parkway
Meriden, CT 06450
(203) 630-1406
(203) 630-2615 Fax

PAWTUCKET-CENTRAL FALLS TRANSIT CENTER
300 PINE STREET PAWTUCKET, RI

REVISIONS

NO	DATE	DESCRIPTION

Designed:	PJS
Drawn:	PJS
Reviewed:	DB/CR/GM
Project No.:	2301115
Date:	04/09/2024

Issued for:
CONSTRUCTION DOCUMENTS

Title:
OVERALL ELECTRICAL LIGHTING PLAN

Sheet No.
E102.1

4/10/2024 10:31:01 AM C:\Users\PShah\Documents\2301115_RIPTA_PassengerFacility_R23_MEP_pshahQE5Y4.rvt

© 2022 BL COMPANIES, INC. THESE DRAWINGS SHALL NOT BE UTILIZED BY ANY PERSON, FIRM OR CORPORATION WITHOUT THE SPECIFIC WRITTEN PERMISSION OF BL COMPANIES.

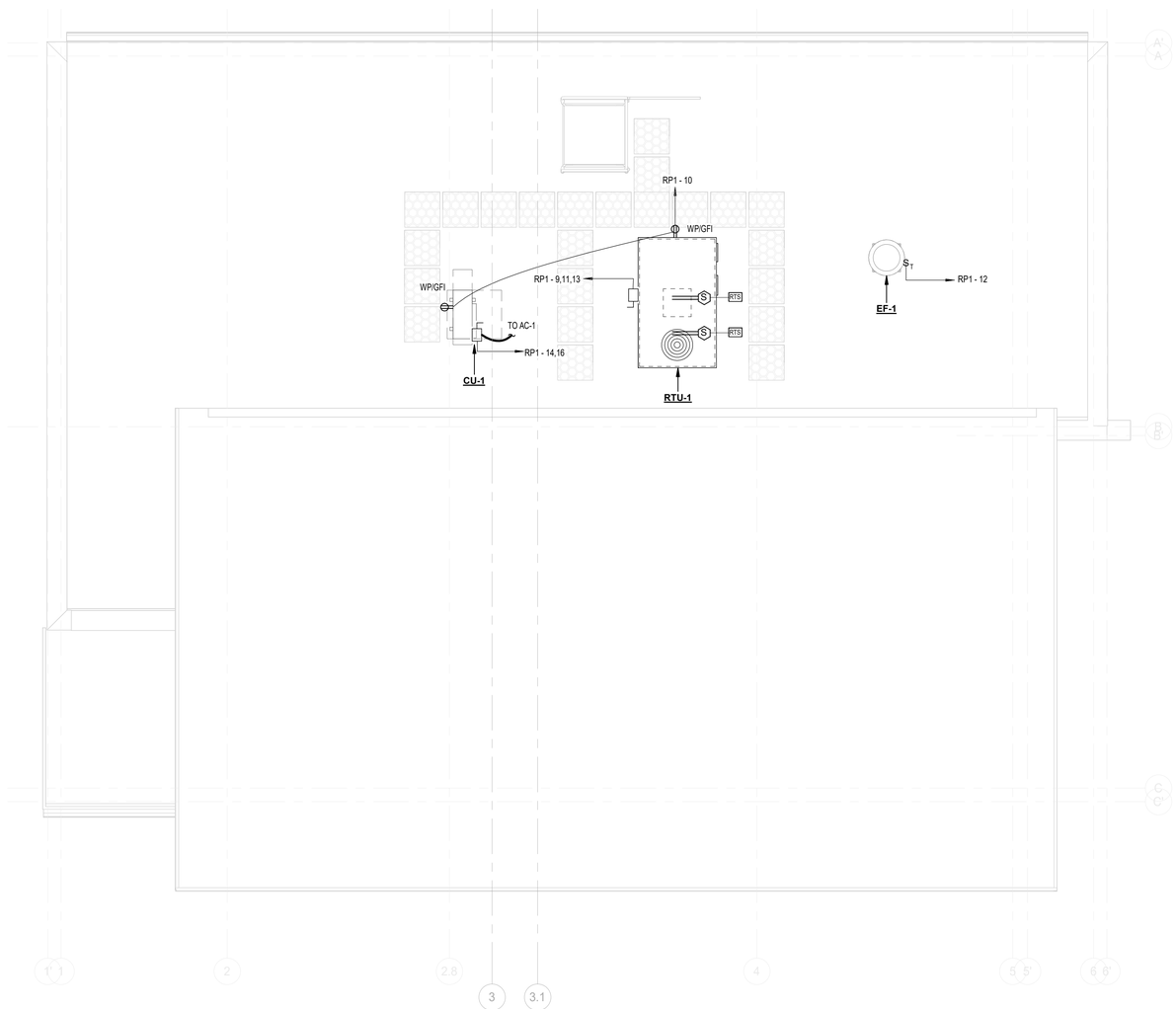

1 ELECTRICAL ROOF PLAN - OVERALL

1/4" = 1'-0"

POWER PLAN GENERAL NOTES:

(NOT ALL NOTES ARE INDICATED ON FLOOR PLAN)

1. ACCESS TO & CLEARANCES AROUND ELECTRICAL EQUIPMENT SHALL CONFORM TO N.E.C. ARTICLES 110. CONSULT ENGINEER WHERE SPACE APPEARS INADEQUATE DUE TO ARCHITECTURAL CHANGES, EQUIPMENT LAYOUT CHANGES, OR FIELD CONDITIONS. DO NOT COVER, OBSCURE OR BLOCK ACCESS TO EQUIPMENT, DATA PLATES, ACCESS PANELS OR MAINTENANCE AREAS WITH THE ELECTRICAL WORK. PROVIDE BOLLARDS OR BARRIER TO PROTECT ELECTRICAL PANELS, MINIMUM 3'-6" CLEARANCE FROM PANELS.
2. THIS DRAWING SHOWS EQUIPMENT LOCATIONS ONLY. WIRING SHOWN IS SCHEMATIC IN NATURE. REFER TO RISERS, & DETAILS FOR ALL REQUIRED POWER & CONTROL WIRING. COORDINATE CONDUIT ROUTE IN FIELD WITH OTHER TRADES, EQUIPMENT & OWNER. VERIFY ALL MOUNTING HEIGHTS WITH OWNER & ARCHITECT PRIOR TO INSTALLATION.
3. UNLESS NOTED OTHERWISE, ALL HOMERUNS SHOWN ARE 3/4"C., 2#12, 1#12G. TO 20A-1P C/B IN PANEL LISTED.
4. UNLESS NOTED OTHERWISE, ALL POWER WIRING OF CIRCUIT SHALL MATCH HOMERUN WIRING OF CIRCUIT. MINIMUM POWER WIRING SHALL BE 3/4"C., 2#12 & 1#12G. MINIMUM CONTROL WIRING SHALL BE 3/4"C., 2#14.
5. COORDINATE WITH MECHANICAL PLANS FOR FINAL LOCATION OF ALL EQUIPMENT AND DEVICES MOUNTED ON OR IN THE VICINITY OF THE MECHANICAL WORK.
6. RECEPTACLES LOCATED WITHIN SIX (6) FEET OF A SINK OR A WATER SOURCE AND WET LOCATION SHALL HAVE GROUND FAULT PROTECTION.
7. COORDINATE EXACT LOCATION OF ALL DEVICES WITH OWNER AND TRADES PRIOR TO INSTALLATION.
8. COORDINATE ELECTRICAL REQUIREMENTS OF ALL MECHANICAL EQUIPMENT WITH APPROVED MANUFACTURER'S SHOP DRAWINGS PRIOR TO INSTALLATION.
9. COORDINATE ELECTRICAL REQUIREMENTS OF ALL OWNER PROVIDED EQUIPMENT WITH ACTUAL EQUIPMENT PRIOR TO INSTALLATION.
10. REFER TO THE GENERAL NOTES FOR WIRING INFORMATION FROM DEVICE.
11. REFER TO MECHANICAL EQUIPMENT FEEDER SCHEDULE.
12. ALL CONDUIT PENETRATIONS THROUGH WALL MUST BE SEALED SLEEVED, AND PROPERLY SUPPORTED ON EACH SIDE OF THE WALL.

TRUE NORTH

Architecture
Engineering
Environmental
Land Surveying
BL Companies

355 Research Parkway
Meriden, CT 06450
(203) 630-1406
(203) 630-2615 Fax

PAWTUCKET-CENTRAL FALLS TRANSIT CENTER
300 PINE STREET PAWTUCKET, RI

REVISIONS

NO	DATE	DESCRIPTION

Designed:	PJS
Drawn:	PJS
Reviewed:	BP/GM/CR
Project No.:	2301115
Date:	04/09/2024

Issued for:
CONSTRUCTION DOCUMENTS

Title:
OVERALL ROOF ELECTRICAL POWER PLAN

Sheet No.
E103.1

4/10/2024 10:31:02 AM C:\Users\PShah\Documents\2301115_RIPTA_PassengerFacility_R23_MEP_pshahQE5Y4.rvt

© 2022 BL COMPANIES, INC. THESE DRAWINGS SHALL NOT BE UTILIZED BY ANY PERSON, FIRM OR CORPORATION WITHOUT THE SPECIFIC WRITTEN PERMISSION OF BL COMPANIES.

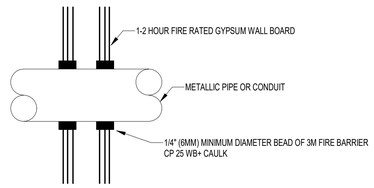

NOTES:

1. THE CAULK IS TO BE FORCED IN TO THE ANNULAR SPACE TO THE MAXIMUM EXTENT POSSIBLE FLUSH WITH THE EXTERIOR OF THE PENETRATION SURFACE.
2. FINISH CAULKING WITH A 1/4" (6mm) MINIMUM BEAD OF CP 25MB+ CAULK APPLIED TO THE PERIMETER OF THE CONDUIT/PIPE AT ITS EGRESS FROM THE WALL.
3. THE MAXIMUM ANNULAR SPACE IS NOT TO EXCEED 3/16" (5mm).
4. INSTALL 3M FIRESTOP ON BOTH SIDES OF THE WALL.
5. THESE RECOMMENDATIONS ARE BASED ON PRODUCT PERFORMANCE PER ASTM E-814 (UL 1479) FIRE TEST AND UL THROUGH-PENETRATION FIRESTOP SYSTEM #WL1001.

1 FIRESTOP PENETRATION DETAIL
NOT TO SCALE

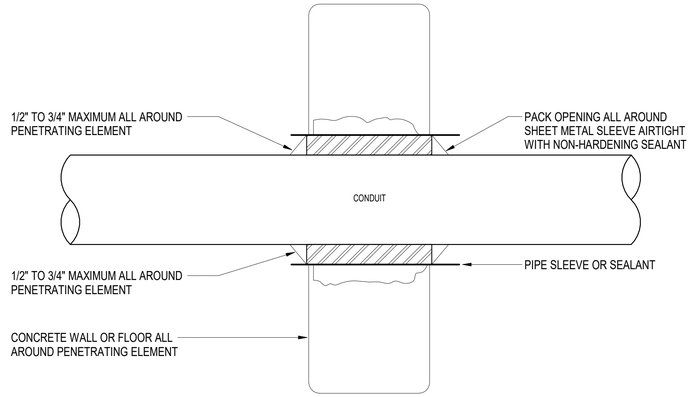

2 NON-RATED PENETRATION DETAIL
NOT TO SCALE

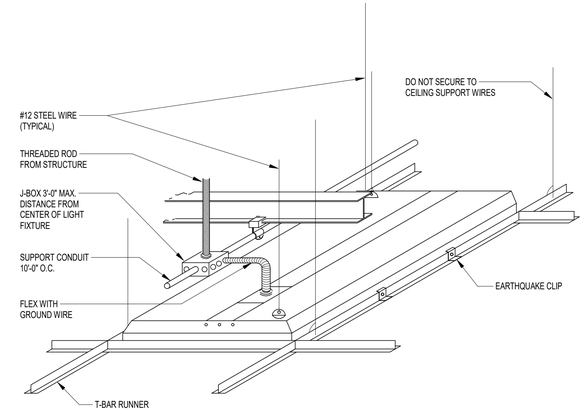

3 RECESSED LAY-IN FIXTURE MOUNTING DETAIL
NOT TO SCALE

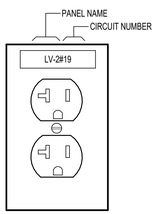

4 RECEPTACLE LABEL DETAIL
NOT TO SCALE

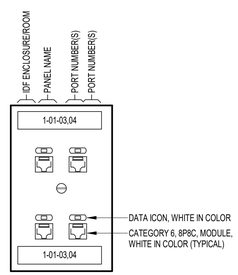

5 TELECOM LABEL DETAIL
NOT TO SCALE

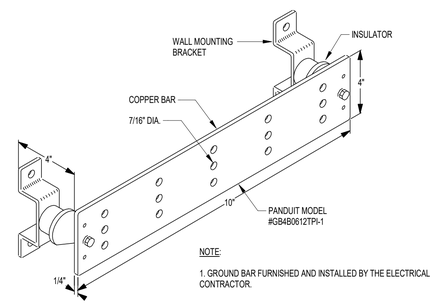

NOTE:

1. GROUND BAR FURNISHED AND INSTALLED BY THE ELECTRICAL CONTRACTOR.

6 TYPICAL GROUNDBAR DETAIL
NOT TO SCALE

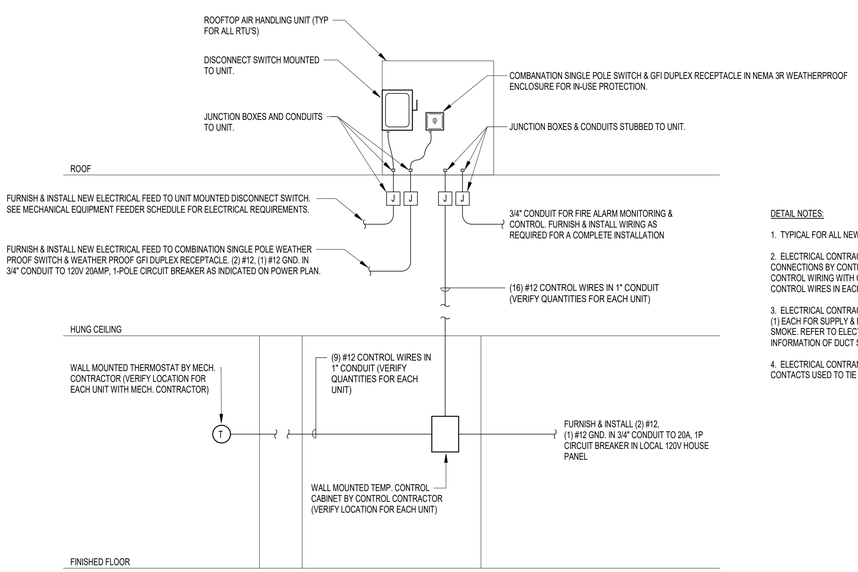

DETAIL NOTES:

1. TYPICAL FOR ALL NEW ROOF TOP UNITS (RTU'S).

2. ELECTRICAL CONTRACTOR SHALL FURNISH & INSTALL CONTROL WIRING FOR UNITS. FINAL CONNECTIONS BY CONTROL CONTRACTOR. COORDINATE QUANTITY & COLOR CODING OF CONTROL WIRING WITH CONTROL CONTRACTOR FOR EACH UNIT. FURNISH & INSTALL (4) SPARE CONTROL WIRES IN EACH RUN OF CONTROL CONDUIT & LABEL EACH END 'SPARE'.

3. ELECTRICAL CONTRACTOR SHALL FURNISH & WIRE (2) DUCT MOUNTED SMOKE DETECTORS, (1) EACH FOR SUPPLY & RETURN. WIRE DETECTORS TO SHUT DOWN UNIT UPON DETECTION OF SMOKE. REFER TO ELECTRICAL GENERAL NOTES & SYMBOLS LEGEND FOR FURTHER INFORMATION OF DUCT SMOKE DETECTORS.

4. ELECTRICAL CONTRANCTOR SHALL FURNISH & INSTALL A RELAY WITH (2) CONVERTABLE CONTACTS USED TO TIE EACH MAGNET STARTER INTO THE FIRE ALARM PANEL.

7 ROOF-TOP EQUIPMENT ELECTRICAL INSTALLATION DETAIL
NOT TO SCALE

TRUE NORTH

Architecture
Engineering
Environmental
Land Surveying
Companies

355 Research Parkway
Meriden, CT 06450
(203) 630-1406
(203) 630-2615 Fax

PAWTUCKET-CENTRAL FALLS TRANSIT CENTER
300 PINE STREET PAWTUCKET, RI

REVISIONS

NO	DATE	DESCRIPTION

Designed:	PJS
Drawn:	PJS
Reviewed:	BP/GM/CR
Project No.:	2301115
Date:	04/09/2024
Issued for:	CONSTRUCTION DOCUMENTS

Title: ELECTRICAL DETAILS

Sheet No. E501

4/10/2024 10:31:02 AM C:\Users\PShah\Documents\2301115_RIPTA_PassengerFacility_R23_MEP_pshahQE5Y4.rvt

© 2022 BL COMPANIES, INC. THESE DRAWINGS SHALL NOT BE UTILIZED BY ANY PERSON, FIRM OR CORPORATION WITHOUT THE SPECIFIC WRITTEN PERMISSION OF BL COMPANIES.

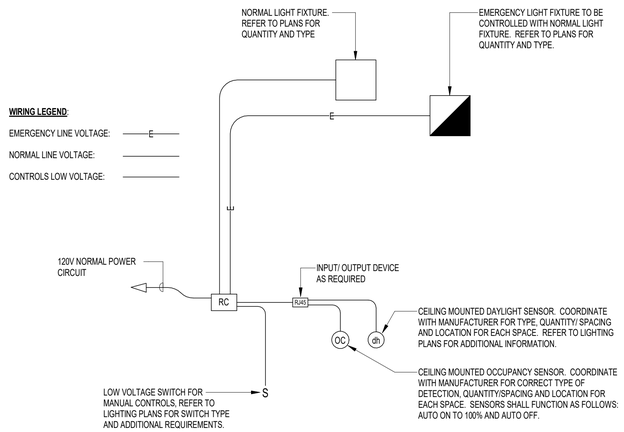

NOTES:
1. REFER TO PLANS FOR QUANTITY OF LIGHT FIXTURES (NORMAL, EMERGENCY AND NIGHT LIGHTS/EMERGENCY) IN EACH SPACE.
2. REFER TO PLANS FOR SPACES REQUIRING DAYLIGHT CONTROLS.
3. CONTRACTOR TO PROVIDE A COMPLETE AND FUNCTIONING SYSTEM. PROVIDE ALL REQUIRED CONTROL COMPONENTS (POWER PACKS, INTERFACE COMPONENTS, CONNECTION HARDWARE, ETC.).
4. CONTRACTOR TO PROVIDE SUFFICIENT QUANTITY OF SENSORS FOR EACH SPACE CONFIGURATION PER MANUFACTURERS RECOMMENDATIONS.

1 TYPICAL LIGHTING CONTROL DIAGRAM SPACES WITH CEILING MOUNTED OCCUPANCY SENSOR CONTROL

NOT TO SCALE

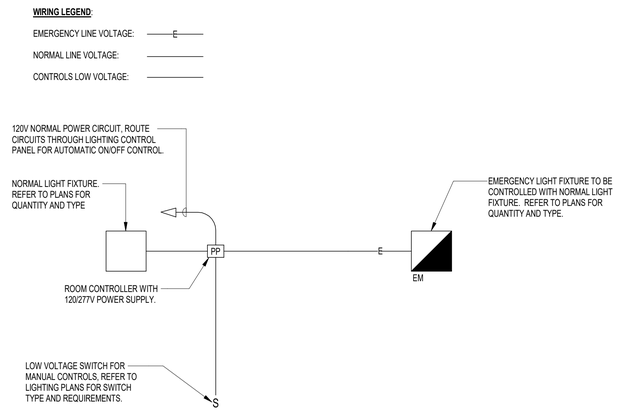

NOTES:
1. REFER TO PLANS FOR QUANTITY OF LIGHT FIXTURES (NORMAL, EMERGENCY AND NIGHT LIGHTS/EMERGENCY) IN EACH SPACE.
2. REFER TO PLANS FOR SPACES REQUIRING DAYLIGHT CONTROLS.
3. CONTRACTOR TO PROVIDE A COMPLETE AND FUNCTIONING SYSTEM. PROVIDE ALL REQUIRED CONTROL COMPONENTS (POWER PACKS, INTERFACE COMPONENTS, CONNECTION HARDWARE, ETC.).
4. CONTRACTOR TO PROVIDE SUFFICIENT QUANTITY OF SENSORS FOR EACH SPACE CONFIGURATION PER MANUFACTURERS RECOMMENDATIONS.

2 TYPICAL LIGHTING CONTROL DIAGRAM SPACES WITH NO AUTOMATIC LIGHTING CONTROL

NOT TO SCALE

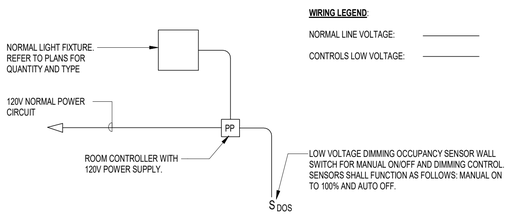

NOTES:
1. REFER TO PLANS FOR QUANTITY OF LIGHT FIXTURES (NORMAL, EMERGENCY AND NIGHT LIGHTS/EMERGENCY) IN EACH SPACE.
2. REFER TO PLANS FOR SPACES REQUIRING DAYLIGHT CONTROLS.
3. CONTRACTOR TO PROVIDE A COMPLETE AND FUNCTIONING SYSTEM. PROVIDE ALL REQUIRED CONTROL COMPONENTS (POWER PACKS, INTERFACE COMPONENTS, CONNECTION HARDWARE, ETC.).
4. CONTRACTOR TO ENSURE WALL SENSOR HAS SUFFICIENT RANGE OF COVERAGE TO COVER ENTIRE SPACE. COORDINATE WITH MANUFACTURER. PROVIDE ADDITIONAL SENSORS IF REQUIRED BY MANUFACTURER.

3 TYPICAL LIGHTING CONTROL DIAGRAM SPACES WITH WALL MOUNTED (SWITCH-TYPE) OCCUPANCY SENSOR CONTROL

NOT TO SCALE

TRUE NORTH

Architecture
Engineering
Environmental
Land Surveying
BL Companies
355 Research Parkway
Meriden, CT 06450
(203) 630-1406
(203) 630-2615 Fax

PAWTUCKET-CENTRAL FALLS TRANSIT CENTER
300 PINE STREET PAWTUCKET, RI

REVISIONS

NO	DATE	DESCRIPTION

Designed:	PJS
Drawn:	PJS
Reviewed:	BP/GM/CR
Project No.:	2301115
Date:	04/09/2024

Issued for:
CONSTRUCTION DOCUMENTS

Title:
ELECTRICAL LIGHTING CONTROL DETAILS

Sheet No.
E502

4/10/2024 10:31:02 AM C:\Users\PShah\Documents\2301115_RIPTA_PassengerFacility_R23_MEP_pshahQE5Y4.rvt

© 2022 BL COMPANIES, INC. THESE DRAWINGS SHALL NOT BE UTILIZED BY ANY PERSON, FIRM OR CORPORATION WITHOUT THE SPECIFIC WRITTEN PERMISSION OF BL COMPANIES.

MECHANICAL FEEDER SCHEDULE

EQUIPMENT	VOLTAGE	POLES	HP	AMPS	KW	DISCONNECT SW.	FUSE	FEEDER	REMARKS
AC-1	208 V	1		1.00 A	0 W	30A, 2P, 240V, NEMA 1	NON-FUSED	(2) #12 AWG + (1) #12 AWG GND IN 3/4"C	A,B,I
CU-1	208 V	1		14.00 A	0 W	30A, 2P, 240V, NEMA 3R	NON-FUSED	(2) #12 AWG + (1) #12 AWG GND IN 3/4"C	A,B,I
EF-1	115 V	1	1/10	5.00 A	0 W	'ST' THERMAL OVERLOAD SWITCH, 120V, 1P, NEMA 1	THERMAL	(2) #12 AWG + (1) #12 AWG GND IN 3/4"C	A,B,E
EWH-1	208 V	1	N/A	7.20 A	1500 W	30A, 2P, 240V, NEMA 1	NON-FUSED	(2) #12 AWG + (1) #12 AWG GND IN 3/4"C	A,G
EWH-2	208 V	1	N/A	7.20 A	1500 W	30A, 2P, 240V, NEMA 1	NON-FUSED	(2) #12 AWG + (1) #12 AWG GND IN 3/4"C	A,G
EWH-3	208 V	1	N/A	7.20 A	1500 W	30A, 2P, 240V, NEMA 1	NON-FUSED	(2) #12 AWG + (1) #12 AWG GND IN 3/4"C	A,G
RP-1	120 V	1	N/A	5.00 A	0 W	'ST' THERMAL OVERLOAD SWITCH, 120V, 1P, NEMA 1	THERMAL	(2) #12 AWG + (1) #12 AWG GND IN 3/4"C	A,G
RTU-1	208 V	3	N/A	53.00 A		100A, 3P, 240V, NEMA 3R	NON-FUSED	(3) #6 AWG + (1) #8 AWG GND IN 1-1/4"C	A,C
TF-1	115 V	1	1/4	5.00 A	0 W	'ST' THERMAL OVERLOAD SWITCH, 120V, 1P, NEMA 1	THERMAL	(2) #12 AWG + (1) #12 AWG GND IN 3/4"C	A,B
WH-1	120 V	1	N/A	6.00 A	1400 W	30A, 120V NEMA 5-30R TYPE RECEPTACLE.	RECEPTACLE	(3) #10 AWG + (1) #10 AWG GND IN 3/4"C	A,B,E

REMARKS:

A. REFER TO FLOOR PLAN FOR HOMERUN POWER INFORMATION.
B. DISCONNECT SWITCH, STARTERS, RELAYS, CONTROL WIRING PROVIDED BY MECH. CONTRACTOR. WIRING TO DISCONNECT SWITCH & EQUIP. TERMINALS PROVIDED BY ELECTRICAL CONTRACTOR.
C. STARTERS, RELAYS, CONTROL WIRING PROVIDED BY MECH. CONTRACTOR. DISCONNECT SWITCH & WIRING TO DISCONNECT SWITCH & EQUIP. TERMINALS PROVIDED BY ELECTRICAL CONTRACTOR.
D. CONTROLLED BY TIMECLOCK PROVIDED & WIRED BY MECH. CONTRACTOR. DISCONNECT SWITCH (LINE SIDE OF TIMECLOCK) & WIRING TO DISCONNECT SWITCH, TIMECLOCK & EQUIP. TERMINALS PROVIDED BY ELECTRICAL CONTRACTOR.
E. LOUVERS SHALL BE INTERLOCKED WITH EXHAUST FANS BY MECH. CONTRACTORS. DISCONNECTS SWITCH & WIRING TO DISCONNECT SWITCH & EQUIP. TERMINALS BY ELECTRICAL CONTRACTOR.
F. CAGE FAN CONTROLS FURNISHED AND INSTALLED BY MECHANICAL CONTRACTOR, WIRED BY ELECTRICAL CONTRACTOR.
G. STARTERS, RELAYS, CONTROL WIRING PROVIDED BY PLUM. CONTRACTOR. DISCONNECT SWITCH & WIRING TO DISCONNECT SWITCH & EQUIP. TERMINALS PROVIDED BY ELECTRICAL CONTRACTOR.
H. CONTROLLED BY EXHAUST FAN TIMER. COORDINATE TIME SCHEDULE WITH OWNER'S REP.
I. INDOOR UNIT AQUIRES ITS POWER FROM THE ASSOCIATED OUTDOOR CONDENSING UNIT.
J. CONDUIT FOR EXHAUST FAN TO BE INSTALLED ON THE ROOF. PROVIDE 'DOGHOUSE' ABOVE EACH MOTOR CONTROL CENTER ROOM. PROVIDE FIRE STOPPING AT ALL PENETRATIONS.
K. ROUTE CIRCUIT V/A VFD, FURNISHED BY DIVISION 23.
L. EQUIPMENT TO HAVE FIRE ALARM CONTROL PANEL TIE-IN, FANS TO SHUT DOWN UPON SIGNAL FROM PANEL. COORDINATE WITH DIVISION 23 AND 28.

NOTES:

1. ALL EQUIPMENT FEEDERS SHALL BE FURNISHED AND INSTALLED FROM CIRCUIT BREAKER TO FINAL TERMINATION ON EQUIPMENT FOR A COMPLETE INSTALLATION AS INDICATED BY DIVISION 26.
2. ALL CIRCUIT BREAKERS SERVING MECHANICAL EQUIPMENT SHALL BE HACR RATED OF SIZE AS INDICATED BY DIVISION 26.
3. ALL EQUIPMENT FEEDER TERMINATIONS TO DISCONNECT SWITCHES AND MOTORS SHALL BE RUN IN MAXIMUM 4' LIQUID-TIGHT FLEXIBLE STEEL CONDUITS.
4. ALL STARTERS SHALL BE FURNISHED AND INSTALLED ADJACENT TO ELECTRICAL PANEL SERVING MECHANICAL EQUIPMENT BY DIVISION 26, UNLESS NOTED OTHERWISE. CONTROL WIRING FOR STARTERS SHALL BE BY DIVISION 23.
5. ALL MECHANICAL EQUIPMENT SHALL HAVE A NEW PERMANENT LABEL, INDICATING ELECTRICAL PANEL AND CIRCUIT BREAKER NUMBERS FEEDING IT, SECURED TO UNIT MOUNTED DISCONNECT SWITCH BY DIVISION 26.
6. VERIFY EXACT LOCATIONS OF MECHANICAL EQUIPMENT IN FIELD WITH MECHANICAL CONTRACTOR.
7. THE SHOWN EQUIPMENT CONDUCTORS ARE SIZED TAKEN IN CONSIDERATION THE VOLTAGE DROP. THE ELECTRICAL CONTRACTOR SHALL VERIFY THE WIRE SIZE ACCORDING WITH FIELD CONDITIONS.
8. REFER TO FLOOR PLAN FOR HOMERUN POWER INFORMATION.
9. RTU'S FED FROM THE BUSWAY HAVE TWO DISCONNECTS OF THE SIZE SHOWN ON SCHEDULE. THE DISCONNECT/BUS PLUG ON THE BUSWAY SHALL BE PROVIDED WITH A FUSE OF THE SIZE SHOWN.
10. MULTIPLE LOUVERS ARE TO BE GANGED TOGETHER ON (1) HOMERUN. SEE PLAN DRAWINGS FOR FURTHER INFORMATION.
11. PWU = PURCHASED WITH UNIT.
12. TPS = THERMALLY-PROTECTED SWITCH.
13. REFER TO FLOOR PLAN FOR HOMERUN POWER INFORMATION.
14. PROVIDE THE CORRECT OVERCURRENT PROTECTION PER THE NAMEPLATE INFORMATION FOR EACH PIECE OF EQUIPMENT..
15. PROVIDE 20A, 120V GFI DUPLEX RECEPTACLE AT EACH ROOFTOP PIECE OF EQUIPMENT. PROVIDE HOMERUN FROM NEAREST 208Y/120V PANEL.

LIGHTING FIXTURE SCHEDULE

TYPE	MANUFACTURER	CATALOG NO.	LAMP	VOLTS	MOUNTING	DESCRIPTION	WATTS	REMARKS
A	ELITE LIGHTING	22-FPL-BL-LED-2000L-3000L-4000L-DIM10-MVOLT-35K-40K-50K-85 (4000L)	LED	120/277	RECESSED CEILING	ELITE LIGHTING 2X2 LED TROFFER, 4536 LUMENS PER LAMP	37.4	'dh' INDICATES FIXTURE CONTROLLED BY DAY LIGHT HARVEST SENSOR, 0-10V DIMMING. FURNISH AND INSTALL DRYWALL FRAME MOUNTING KIT AS REQUIRED.
AE	ELITE LIGHTING	22-FPL-BL-LED-2000L-3000L-4000L-DIM10-MVOLT-35K-40K-50K-85 (4000L)	LED	120/277	RECESSED CEILING	ELITE LIGHTING 2X2 LED TROFFER, 4536 LUMENS PER LAMP	37.4	'dh' INDICATES FIXTURE CONTROLLED BY DAY LIGHT HARVEST SENSOR, 0-10V DIMMING. FIXTURE TO BE PROVIDED WITH INTEGRAL BATTERY BACKUP.
B	ELITE LIGHTING	HH4-LED-900L-DIM10-MVOLT-MD-40K-90-HH4-4501-CL-WH	LED	120/277	RECESSED CEILING	4" RECESSED DOWN LIGHT, 961 LUMENS PER LAMP	11.6	-
BE	ELITE LIGHTING	HH4-LED-900L-DIM10-MVOLT-MD-40K-90-HH4-4501-CL-WH	LED	120/277	RECESSED CEILING	4" RECESSED DOWN LIGHT, 961 LUMENS PER LAMP	11.6	FIXTURE TO BE PROVIDED WITH INTEGRAL BATTERY BACKUP.
B1	ELITE LIGHTING	HH4-LED-1500L-DIM10-MVOLT-MD-40K-90-HH4-4501-CL-WH	LED	120/277	RECESSED CEILING	4" RECESSED DOWN LIGHT, 1766 LUMENS PER LAMP	18.25	-
B2	ELITE LIGHTING	HH4-LED-2000L-DIM10-MVOLT-MD-40K-90-HH4-4501-CL-WH	LED	120/277	RECESSED CEILING	4" RECESSED DOWN LIGHT, 2054LUMENS PER LAMP	25	-
C	ELITE LIGHTING	OLS-DI-LED-2-CR-4-D500L-U500-1C-DIM10-MVOLT-35K-85-WH	LED	120/277	SURAFE MOUNTED LINEAR LED	4' LED LINEAR STRIP LIGHT, 500 DIRECT/INDIRECT LUMENS PER FT.	35.3	-
CE	ELITE LIGHTING	OLS-DI-LED-2-CR-4-D500L-U500-1C-DIM10-MVOLT-35K-85-WH	LED	120/277	SURAFE MOUNTED LINEAR LED	4' LED LINEAR STRIP LIGHT, 500 DIRECT/INDIRECT LUMENS PER FT.	35.3	FIXTURE TO BE PROVIDED WITH INTEGRAL BATTERY BACKUP.
E	ELITE LIGHTING	4-OC1-LED-3000L-4000L-5000L-DIM10-MVOLT-35K-40K-50K-85V2	LED	120/277	SURAFE MOUNTED LINEAR LED	4' LED LINEAR STRIP LIGHT, 5266 LUMENS.	39	-
G	ELITE LIGHTING	OLS-CM-LED-2-S-4-1000L-DIM10-MVOLT-40K-85	LED	120/277	SURFACE	4' LED LINEAR STRIP LIGHT, WET LOCATION LISTED	33	-
EM	McGRAW-EDISON	IST-AF-450-LED-E1-T4FT-AP-8030-P	LED	120/277	SURFACE WALL	EXTERIOR WALL MOUNT EMERGENCY LIGHT FIXTURE WITH INTERGRAL PHOTOCELL.	26	MOUNT FIXTURE AT 9' ABOVE FINISHED GRADE OR 6" ABOVE DOOR FRAME. WIRED TO NORMAL AND EMERGENCY POWER CIRCUIT.
F	ECLIPSE LIGHTING	LV3-42W-SCCT-T3-UNV-BZ-EL8W	LED	120/277	SURFACE WALL	EXTERIOR WALL PACK WITH INTEGRAL PHOTOCELL	69	COORDINATE WITH CIVIL FOR EXACT MOUNTING HEIGHT FOR THE LIGHT FIXTURE.
X1	COOPER LIGHTING	CX61	LED	120/277	SURFACE WALL/ CEILING	UNIVERSAL MOUNT EXIT SIGN, DIE CAST ALUMINIUM CONSTRCUTION. BRUSHED ALUMINUM FACEPLATE WITH MATTE BLACK ELECTROSTATIC POLYMERIC TRIM AND RED BACKLIT FACEPLATE	2	FURNISH AND INSTALL SINGLE, DOUBLE FACEPLATE DIRECTIONAL CHEVRONS AS SPECIFIED ON ELECTRICAL DRAWINGS, PROVIDE WITH INTEGRAL BATTERY BACKUP.
K	ECLIPSE LIGHTING	30-AP-40-40K-80-UNV-BZ	LED	120/277	SURFACE WALL	GALLELIO 30" DECORATIVE LIGHT FIXTURE	40	MOUNT THE FIXTURE 8' OR ABOVE. PROVIDE WITH INTEGRAL BATTERY BACKUP
SL	LIVERPOOL LIGHTING	LV3-42W-SCCT-T3-UNV-BZ-EL8W	LED	120/277	SURFACE WALL	EXTERIOR WALL PACK WITH INTEGRAL PHOTOCELL	42	COORDINATE WITH CIVIL FOR EXACT MOUNTING HEIGHT FOR THE LIGHT FIXTURE.

LIGHTING FIXTURE NOTES:

1. BIDS SHALL BE BASED ON THE LIGHTING FIXTURE SCHEDULE AND SPECIFICATIONS. REFER TO THE ELECTRICAL SPECIFICATIONS FOR ADDITIONAL INFORMATION.
2. ALL FIXTURES SHALL BE UL LISTED.
3. ALL NECESSARY MOUNTING HARDWARE, HANGERS, BRACKETS, RAILS, YOKES, STEMS, CHAINS, ETC., SHALL BE FURNISHED AND INSTALLED.
4. REFER TO ARCHITECTURAL DRAWINGS FOR SPECIFIC DETAILS, ARRANGEMENT, MOUNTING HEIGHTS, CEILING CONSTRUCTION, ETC. ALL COLORS AND FINISHES SHALL BE VERIFIED BY THE ARCHITECT.
5. FIXTURES SHALL BE SEISMICALLY SUPPORTED AS REQUIRED BY BUILDING CODE.
6. WIRE ALL BATTERY PACK UNITS (I.E. EXIT SIGNS AND EMERGENCY UNITS) TO LINE SIDE OF LOCAL LIGHTING BRANCH CIRCUIT.
7. SUBSTITUTIONS WONT BE REVIEWED/ ACCEPTED WITHOUT PHOTOMETRIC CALCULATIONS PLAN.
8. PROVIDE EMERGENCY BYPASS RELAY (UL 924 COMPLIANT) TO ALLOW EMERGENCY FIXTURES TO BE CONTROLLED WITH NORMAL FIXTURE. COORDINATE WITH MANUFACTURER FOR ALL REQUIRED INTERCONNECTIONS OF BYPASS RELAY AND THE PROPER MOUNTING LOCATION FOR THE RELAY.

N
TRUE NORTH

Architecture
Engineering
Environmental
Land Surveying
Companies

355 Research Parkway
Meriden, CT 06450
(203) 630-1406
(203) 630-2615 Fax

PAWTUCKET-CENTRAL FALLS TRANSIT CENTER
300 PINE STREET PAWTUCKET, RI

REVISIONS

NO	DATE	DESCRIPTION

Designed:	PJS
Drawn:	PJS
Reviewed:	BP/GM/CR
Project No.:	2301115
Date:	04/09/2024
Issued for:	CONSTRUCTION DOCUMENTS

Title: ELECTRICAL SCHEDULES

Sheet No.

E601

4/10/2024 10:31:03 AM C:\Users\PShah\Documents\2301115_RIPTA_PassengerFacility_R23_MEP_pshahQE5Y4.rvt

© 2022 BL COMPANIES, INC. THESE DRAWINGS SHALL NOT BE UTILIZED BY ANY PERSON, FIRM OR CORPORATION WITHOUT THE SPECIFIC WRITTEN PERMISSION OF BL COMPANIES.

PANEL: RP1

LOCATION: UTILITIES CL 110
SUPPLY FROM:
MOUNTING: SURFACE
ENCLOSURE: Type 1

VOLTAGE: 120/208V
PHASES: 3
WIRES: 4

A.I.C. RATING: 10 KAIC
MAINS TYPE: COPPER
MAINS RATING: 400 A
MCB RATING: 400 A

CKT	CIRCUIT DESCRIPTION	TRIP	POLES	A		B		C		POLES	TRIP	CIRCUIT DESCRIPTION	CKT
1	REC - REFRIGERATOR (NOTE 2)	20 A	1	1.20	1.50					1	20 A	REC - MICROWAVE (NOTE 2)	2
3	REC - DRIVER BREAK RM/C.S.	20 A	1			0.72	0.36			1	20 A	REC - RM 107/108	4
5	REC - MENS/ WOMENS REST ROOM 112/113	20 A	1					0.90	0.37	1	20 A	REC - WATER COOLER (NOTE 2)	6
7	REC - WAITING ROOM	20 A	1	0.90	0.54					1	20 A	REC - POLICE SUBSTATION AREA	8
9	RTU- 1	70 A	3			6.36	0.36			1	20 A	REC - CONVENIENCE (ON ROOF)	10
11								6.36	0.60	1	20 A	EF-1	12
13				6.36	1.25					2	20 A	AC-1/CU-1	14
15	EWH - 1	20 A	2			0.75	1.25						16
17								0.75	0.75	2	20 A	EWH - 2	18
19	POWER - PLUMBING FIXTURES	20 A	1	1.50	0.75								20
21	POWER - PLUMBING FIXTURES	20 A	1			1.50	1.00			1	20 A	POWER - PLUMBING FIXTURES	22
23	POWER - PLUMBING FIXTURES	20 A	1					1.50	0.50	1	20 A	POWER - PLUMBING TRAP PRIMERS	24
25	LIGHTING	20 A	1	1.41	1.01					1	20 A	LIGHTING	26
27	POWER - PLUMBING FIXTURES	20 A	1			1.00	0.75			2	20 A	EWH - 3	28
29	REC - TV DRIVER'S BREAK ROOM	20 A	1					0.18	0.75				30
31	REC - TV WAITING AREA	20 A	1	0.36	0.06					1	20 A	POWER - RP1	32
33	REC - EWH 1	25 A	1			2.00	1.00			1	20 A	REC - VENDING MACHINE (NOTE 2)	34
35	REC - VENDING MACHINE (NOTE 2)	20 A	1					1.00	1.00	1	20 A	REC - VENDING MACHINE (NOTE 2)	36
37	LIGHTING - EXTERIOR	20 A	1	0.72	0.06					1	20 A	POWER - TF1	38
39	FACP (FIRE ALARM CONTROL PANEL)	20 A	1			1.96	1.00			1	20 A	POWER - CARD READER	40
41	POWER - CARD READER	20 A	1					1.25	0.72	1	20 A	POWER - CAMERA	42
43	POWER - CAMERA	20 A	1	0.72	0.36					1	20 A	POWER - PANIC BUTTON DEVICE	44
45	POWER - DOOR ASSIST	20 A	1			0.72	0.18			1	20 A	POWER - DOOR ASSIST	46
47	REC - IDF EQUIPMENT	20 A	1					0.18	0.18	1	20 A	REC - TV WAITING AREA	48
49	POWER - CAMERA	20 A	1	0.36	0.72					1	20 A	REC - WORK STATION	50
51	REC - DEMARC RM	20 A	1			0.18	0.50			1	20 A	POWER - CARD READER	52
53	SPACE	--	1					--	--	1	--	SPACE	54
55	SPACE	--	1	--	--					1	--	SPACE	56
57	SPACE	--	1			--	--			1	--	SPACE	58
59	SPACE	--	1					--	--	1	--	SPACE	60
61	SPACE	--	1	--	--					1	--	SPACE	62
63	SPACE	--	1			--	--			1	--	SPACE	64
65	SPACE	--	1					--	--	1	--	SPACE	66
67	SPACE	--	1	--	--					1	--	SPACE	68
69	SPACE	--	1			--	--			1	--	SPACE	70
71	SPACE	--	1					--	--	1	--	SPACE	72
73	SPACE	--	1	--	--					1	--	SPACE	74
75	SPACE	--	1			--	--			1	--	SPACE	76
77	SPACE	--	1					--	--	1	--	SPACE	78
79	SPARE	20 A	1	0.00	0.00					1	20 A	SPARE	80
81	SPARE	20 A	1			0.00	0.00			1	20 A	SPARE	82
83	SPARE	20 A	1					0.00	0.00	1	20 A	SPARE	84
		TOTAL LOAD:		19.67 kVA		21.59 kVA		16.99 kVA					
		TOTAL AMPS:		167 A		183 A		142 A					

LOAD CLASSIFICATION	CONNECTED LOAD	DEMAND FACTOR	ESTIMATED DEMAND	PANEL TOTALS	
LIGHTING	3 kVA	125.00%	4 kVA		
LIGHTING - EXTERIOR	0 kVA	125.00%	0 kVA	**TOTAL CONNECTED LOAD:**	58 kVA
RECEPTACLES	13 kVA	88.67%	11 kVA	**TOTAL EST. DEMAND LOAD:**	58 kVA
Power	42 kVA	100.00%	42 kVA	**TOTAL CONNECTED AMPS:**	162 A
RECEPTACLE	1 kVA	100.00%	1 kVA	**TOTAL EST. DEMAND AMPS:**	160 A

NOTES:
1. CIRCUIT BREAKERS FEEDING F.A. DEVICES SHALL BE RED WITH LOCK-ON DEVICE
2. PROVIDE CLASS A GFI CIRCUIT BREAKER
3. PROVIDE SHUNT-TRIP BREAKER
4. MATCH BREAKER AND WIRE SIZE TO SPD
5. PROVIDE HANDLE TIE BETWEEN 3-P AND 1-P CUBICLE BREAKERS FOR MULTIWIRE BRANCH...

TRUE NORTH

Architecture
Engineering
Environmental
Land Surveying
BL Companies

355 Research Parkway
Meriden, CT 06450
(203) 630-1406
(203) 630-2615 Fax

PAWTUCKET-CENTRAL FALLS TRANSIT CENTER
300 PINE STREET PAWTUCKET, RI

REVISIONS

NO	DATE	DESCRIPTION

Designed:	PJS
Drawn:	PJS
Reviewed:	BP/GM/CR
Project No.:	2301115
Date:	04/09/2024
Issued for:	CONSTRUCTION DOCUMENTS

Title: ELECTRICAL PANELBOARD SCHEDULES

Sheet No.
E603

4/10/2024 10:31:04 AM C:\Users\PShah\Documents\2301115_RIPTA_PassengerFacility_R23_MEP_pshahQE5Y4.rvt

© 2022 BL COMPANIES, INC. THESE DRAWINGS SHALL NOT BE UTILIZED BY ANY PERSON, FIRM OR CORPORATION WITHOUT THE SPECIFIC WRITTEN PERMISSION OF BL COMPANIES.

ONE-LINE POWER RISER DIAGRAM FEEDER KEY NOTES

SYMBOL	VOLTS	PHASE	AMPS	COPPER WIRE (THHN IN EMT CONDUIT) (UON)	MAX DISTANCE	REMARKS
A	208/120V	3PH	400A	(4) 600KCMIL IN 4"C	600	
B	208/120V	3PH	400A	(4) 600KCMIL AND (1) #3 AWG GND IN 4"C	600	
EQUIPMENT GROUNDING						
G1	400A DISCONNECT SWITCH			(1) #3 AWG GND IN 3/4"C (COPPER)		

1. ACTUAL RUN LENGTH WILL BE GREATER FOR LOADS LESS THAN 80% OF CIRCUIT CAPACITY. CONTRACTOR SHALL CALCULATE ACTUAL LENGTH BASED ON LOAD ON THE CIRCUIT.
2. CONDUCTOR SIZES ARE BASED ON 60°C TEMPERATURE RATING FOR BREAKERS SIZES 100A AND SMALLER, AND BASED ON 75°C RATING FOR BREAKERS LARGER THAN 100A.
3. WHERE FEEDERS ARE ADJUSTED FOR VOLTAGE DROP, COORDINATE LANDING LUGS ON BREAKERS AND PANELS TO ACCOMMODATE FOR LARGER WIRE SIZE. IT SHALL BE ACCEPTABLE TO PROVIDE JUNCTION BOX WITH TERMINAL BLOCKS AHEAD OF OVERCURRENT DEVICE TO TRANSITION WIRE SIZES.
4. BOND NEUTRAL OF TRANSFORMER SECONDARY TO THE TRANSFORMER CASE WITH BONDING JUMPER AS PER NATIONAL ELECTRIC CODE.
5. GROUND THE CASING OF TRANSFORMER TO THE NEAREST AVAILABLE EFFECTIVELY GROUNDED STRUCTURAL STEEL AS PER NATIONAL ELECTRIC CODE.
6. ALL CONDUIT SIZES ARE FOR COPPER CONDUCTORS.
7. COORDINATE EXACT EXTERNAL SURGE PROTECTION DEVICE CIRCUIT BREAKER AND WIRING REQUIREMENTS WITH EQUIPMENT MANUFACTURER.

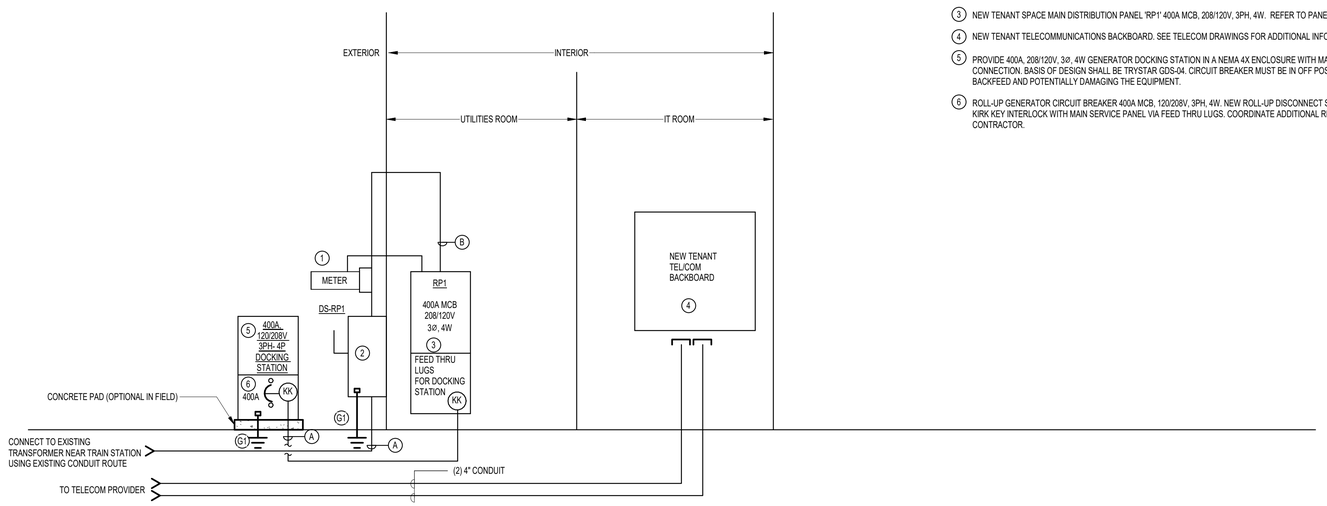

1 ONE LINE RISER DIAGRAM
NOT TO SCALE

ONE-LINE POWER RISER DIAGRAM GENERAL NOTES:

1. ALUMINUM CONDUCTORS MAY BE SUBTITUTED FOR COPPER CONDUCTORS FOR FEEDERS 150 AMPS & LARGER. ALUMINUM CONDUCTORS SHALL NOT BE USED WHERE EXPRESSLY FORBIDDEN BY LOCAL ELECTRICAL INSPECTIONS DEPARTMENT. UTILITY COMPANY OR THE PLAN REVIEW BOARD OF JURISDICTION. ELECTRICAL CONTRACTOR TO COORDINATE ALL CHANGES IN SIZE & QUANTITY OF PARALLEL CONDUITS FOR ANY/ALL ALUMINUM FEEDER CHANGES.
2. REFER TO DETAILS FOR SERVICE GROUNDING & BONDING.
3. ALL FLOOR-MOUNTED EQUIPMENT SHALL BE INSTALLED ON A 3" CONCRETE HOUSEKEEPING PAD, UNLESS OTHERWISE NOTED.
4. MAXIMUM DISTANCE THE SECONDARY CONDUCTORS CAN BE RUN PRIOR TO OVERCURRENT PROTECTION IS 10 FEET.
5. ALL CIRCUIT BREAKERS GREATER THAN 250A SHALL BE PROVIDED WITH LSI ADJUSTABLE TRIP SETTINGS.
6. PROVIDE A SHORT CIRCUIT-STUDY, SELECTIVE COORDINATION STUDY AND ARC FLASH ANALYSIS FOR AECH ELECTRICAL SERVICE AND INFRASTRUCTURE. ADJUST TRIP SETTINGS ON CIRCUIT BREAKERS & MODIFY SHORT CIRCUIT RATINGS OF ELECTRICAL EQUIPMENT PER THE RESULTS. OVERCURRENT PROTECTIVE DEVICES SHALL BE SELECTIVELY COORDINATED FOR DISTRIBUTION SYSTEMS SERVING EMERGENCY AND STANDBY LOADS, AS WELL AS THOSE SERVING MULTIPLE ELEVATORS, FOR FAULTS WITH DURATIONS AT 0.01 SECONDS. ALL OTHER LOADS SHALL BE COORDINATED TO 0.1 SECONDS.
7. COORDINATE REQUIREMENTS OF NEC ARTICLE 240.87 WITH OVER CURRENT DEVICES INSTALLED IN CIRCUIT BREAKERS RATED OR ADJUSTABLE AT 1200A & HIGHER.
8. COORDINATE REQUIREMENTS OF NEC ARTICLE 230.95. GROUND FAULT PROTECTION OF EQUIPMENT SHALL BE PROVIDED FOR SOLIDLY GROUNDED WYE ELECTRIC SERVICES OF MORE THAN 150V TO GROUND BUT NOT EXCEEDING 1000 VOLTS PHASE-TO-PHASE FOR EACH SERVICE DISCONNECT RATED 1000 AMPERES OR MORE.
9. THE PLANS REFLECT SYSTEM VOLTAGES AS PER LATEST EDITION OF THE PENNSYLVANIA STATE ELECTRICAL CODE. FEEDER CONDUCTORS ARE SIZED FOR A MAXIMUM VOLTAGE DROP OF 2 PERCENT AT DESIGN LOAD. BRANCH CIRCUIT CONDUCTORS ARE SIZED FOR A MAXIMUM VOLTAGE DROP OF 3 PERCENT AT DESIGN LOAD.
10. U.O.N. ALL PANELBOARDS SHALL BE PROVIDED WITH CU BUSSINGS AND DOOR-IN-DOOR CONSTRUCTION.
11. PROVIDE AVAILABLE MAXIMUM FAULT CURRENT AT MAIN SWITCHBOARD AND DATE THE CALCULATION PERFORMED WITH SIGNAGE PER NEC 110.24
12. ALL SWITCHBOARDS, PANELBOARDS SHALL BE IDENTIFIED WITH SOURCE OF SUPPLY PER NEC 408.4(B).
13. ALL BRANCH CIRCUITS AND FEEDERS SHALL BE MARKED AS PER NEC 210.5(C) AND NEC 215.12

ONE-LINE POWER RISER DIAGRAM KEY NOTES:

1. NEW UTILITY PRIMARY METERING EQUIPMENT. COORDINATE EXACT METERING REQUIREMENTS WITH UTILITY COMPANY.
2. NEW TENANT SPACE MAIN SERVICE DISCONNECT SWITCH 400A MCB, 208/120V, 3PH, 4W. PROVIDE WITH LSIG TYPE MAIN CIRCUIT BREAKER, 240KA SURGE CURRENT RATING, INTEGRAL DISCONNECT, SURGE COUNTER, ALARM DRY CONTACTS.
3. NEW TENANT SPACE MAIN DISTRIBUTION PANEL 'RP1' 400A MCB, 208/120V, 3PH, 4W. REFER TO PANEL SCHEDULE FOR ADDITIONAL INFORMATION.
4. NEW TENANT TELECOMMUNICATIONS BACKBOARD. SEE TELECOM DRAWINGS FOR ADDITIONAL INFORMATION.
5. PROVIDE 400A, 208/120V, 3ø, 4W GENERATOR DOCKING STATION IN A NEMA 4X ENCLOSURE WITH MALE CAMLOCK FOR TEMPORARY GENENRATOR CONNECTION. BASIS OF DESIGN SHALL BE TRYSTAR GDS-04. CIRCUIT BREAKER MUST BE IN OFF POSITION BEFORE TRANSFERING POWER TO PREVENT BACKFEED AND POTENTIALLY DAMAGING THE EQUIPMENT.
6. ROLL-UP GENERATOR CIRCUIT BREAKER 400A MCB, 120/208V, 3PH, 4W. NEW ROLL-UP DISCONNECT SHALL BACKFEED MAIN PANEL AND SHALL HAVE KIRK KEY INTERLOCK WITH MAIN SERVICE PANEL VIA FEED THRU LUGS. COORDINATE ADDITIONAL REQUIREMENT WITH UTILITY AND ELECTRICAL CONTRACTOR.

BRANCH CIRCUIT SIZE SCHEDULE (COPPER)

VOLTAGE DROP CALCULATED AT 3% MAX AND 80% OF OCPD RATING

CIRCUIT OVERCURRENT PROTECTION RATING	CONDUCTORS WITH GROUND	CONDUIT	MAX DISTANCE (FT) (277V/1PH)	MAX DISTANCE (FT) (120V/1PH)
15A	2#12 & 1#12 G	3/4"	195	85
20A	2#12 & 1#12 G	3/4"	145	62
25A	2#10 & 1#10 G	3/4"	197	85
30A	2#10 & 1#10 G	3/4"	160	70
35A	2#8 & 1#10 G	3/4"	210	93
40A	2#8 & 1#10 G	3/4"	185	80
45A	2#6 & 1#10 G	3/4"	260	110
50A	2#6 & 1#10 G	3/4"	235	100
60A	2#4 & 1#10 G	1"	300	130
70A	2#4 & 1#8 G	1"	255	111
80A	2#3 & 1#8 G	1"	175	118
90A	2#2 & 1#8 G	1"	315	137
100A	2#1 & 1#8 G	1-1/4"	345	151

NOTES

1. ACTUAL RUN LENGTH WILL BE GREATER FOR LOAD LESS THAN 80% OF CIRCUIT CAPACITY. CONTRACTOR SHALL CALCULATE ACTUAL LENGTH BASED ON LOAD ON THE CIRCUIT.
2. CONDUCTOR SIZES ARE BASED ON 60 DEGREE CELSIUS TEMPERATURE RATING FOR BREAKER SIZES 100A AND SMALLER AND BASED ON 75 DEGREES CELSIUS FOR BREAKER SIZES LARGER THAN 100A.
3. COORDINATE WITH BREAKER MANUFACTURER FOR ACCEPTABLE RANGE OF WIRE SIZE TERMINAL RATINGS. ADJUST/UPSIZE BREAKER TYPE AS REQUIRED TO ACCOMMODATE INCREASED WIRE SIZES.

Architecture
Engineering
Environmental
Land Surveying
BL Companies

355 Research Parkway
Meriden, CT 06450
(203) 630-1406
(203) 630-2615 Fax

PAWTUCKET-CENTRAL FALLS TRANSIT CENTER
300 PINE STREET PAWTUCKET, RI

REVISIONS

NO	DATE	DESCRIPTION

Designed:	PJS
Drawn:	PJS
Reviewed:	DB/CR/GM
Project No.:	2301115
Date:	04/09/2024

Issued for:
CONSTRUCTION DOCUMENTS

Title:
ELECTRICAL RISER DIAGRAM

Sheet No.
E604

4/10/2024 10:31:04 AM C:\Users\PShah\Documents\2301115_RIPTA_PassengerFacility_R23_MEP_pshahQE5Y4.rvt

© 2022 BL COMPANIES, INC. THESE DRAWINGS SHALL NOT BE UTILIZED BY ANY PERSON, FIRM OR CORPORATION WITHOUT THE SPECIFIC WRITTEN PERMISSION OF BL COMPANIES.

SYMBOL LEGEND

SYM	DESCRIPTION	OUTLET BOX & CONDUIT SIZES PROVIDED & INSTALLED BY ELECTRICAL CONTRACTOR							CABLE / TERMINATION PROVIDED & INSTALLED BY LOW VOLTAGE CONTRACTOR												COMMMENTS
		1 G - 2-1/2" DP	4 x 4" x 2-1/8" DP	1G DEVICE RING	LEGRAND #EFSB4 OR EQUIV.	4G DEVICE RING	1" C	1/2" FLEX	ETHERNET CABLE AS SPECIFIED	8P8C [RJ45] JACK AS SPECIFIED	FACEPLATE	WALL PHONE MTG PLATE	HUBBELL #HSB2WP	BELDEN #658AF-J COMPOSIT CABLE PLENUM or Equiv. 18-6C-SHLD, 22-2C, 22-4C, 18-4C	#18 - 6C PLENUM	#18 - 6C PLENUM SHIELDED	#18 - 4C PLENUM	#22 - 2C PLENUM	#22 - 4C PLENUM	PLENUM CABLE A/R	
W ▶	WALL PHONE OUTLET	1		1			1		1	1		1									MOUNT @ 48" UNLESS OTHERWISE SPECIFIED
1D ▷	1 DATA OUTLET		1	1			1		1	1	1										MOUNT @ 18" UNLESS OTHERWISE SPECIFIED
2D ▷	2 DATA OUTLET		1	1			1		2	2	1										MOUNT @ 18" UNLESS OTHERWISE SPECIFIED
1V1D ▶	1 VOICE 1 DATA OUTLET		1	1			1		2	2	1										MOUNT @ 18" UNLESS OTHERWISE SPECIFIED
1V2D ▶	1 VOICE 2 DATA OUTLET		1	1			1		3	3	1										MOUNT @ 18" UNLESS OTHERWISE SPECIFIED
MON ▷	MONITOR & DATA OUTLET MON-xx REFERS TO SCREEN SIZE				1		1		1	1											MON-55 - PROCURE & INSTALL SHARP MODEL #ME651 OR PHILIPS EQUIV. MON-65 - PROCURE & INSTALL SHARP MODEL #ME661 OR PHILIPS EQUIV. PROCURE & INSTALL CHIEF #XTM1U TV MOUNTING BRACKET OR EQUIV.
AP	WIRELESS ACCESS POINT CEILING MOUNTED								1	1			1								REFER TO AP MOUNTING DETAIL
	CAMERA DATA OUTLET		1	1			1		1	1			1								
	CAMERA DATA OUTLET		1	1			1		1	1			1								
CR	CARD READER		1					1								1					FINAL CONNECTIONS FROM [JB] (BELDEN CABLE) TO [CR] IS REQUIRED.
PB	PANIC BOTTON - DURESS							1							1						
DC	DOOR CONTACT							1										1			FINAL CONNECTIONS FROM [JB] (BELDEN CABLE) TO [CR] IS REQUIRED.
EL	ELECTRIC LOCK							1									1				FINAL CONNECTIONS FROM [JB] (BELDEN CABLE) TO [EL] IS REQUIRED.
ES	ELECTRIC STRIKE							1									1				FINAL CONNECTIONS FROM [JB] (BELDEN CABLE) TO [ES] IS REQUIRED.
JB	JUNCTION BOX						1	1						1							
RX	REQUEST TO EXIT							1											1		FINAL CONNECTIONS FROM [JB] (BELDEN CABLE) TO [RX] IS REQUIRED.
S1	PA SPEAKER, CEILING MOUNTED AS SPECIFIED																			1	
S	PA SPEAKER, WALL MOUNTED AS SPECIFIED																			1	

GENERAL NOTES

1. DRAWINGS INDICATE THE GENERAL ARRANGEMENT OF SYSTEMS AND WORK INCLUDED IN THE CONTRACT.
2. ALL COMMUNICATION, SECURITY, AND AV OUTLETS MUST COINCIDE WITH ELECTRICAL POWER DRAWINGS. THE CONTRACTOR MUST COORDINATE ALL LOCATIONS OF THE ELECTRICAL OUTLETS WITH THESE OUTLETS.
3. REQUIRED CABLE COLORS: SUBMIT ALL CABLE AND JACK COLOR WITH PRODUCT SUBMITTALS PRIOR TO PROCUREMENT
4. LABEL ALL CABLES WITHIN 12" OF FINAL TERMINATION.
5. THE CONTRACTOR SHALL MAINTAIN THE TWIST OF THE INDIVIDUAL PAIRS TO WITHIN 1/2" OF FINAL TERMINATION FOR ALL CATEGORY 3 OR HIGHER CABLE.
6. USE ONLY HOOK AND LOOP CABLE TIES (VELCRO) FOR CABLES RATED CATEGORY 3 OR HIGHER.
7. ALL CABLES RUN IN CEILING AREAS SHALL BE PROPERLY SUPPORTED WITH CONDUIT OR J-HOOKS MOUNTED TO SLAT AT MINIMUM OF 5' INTERVALS. NO CABLE SHALL REST OR TOUCH CEILING ASSEMBLIES. CABLES SHALL NOT BE INSTALLED EXPOSED IN OPEN CEILING AREAS.
8. ALL LABELS SHALL BE MACHINE PRINTED. NO HAND LETTERED CABLES SHALL BE USED.
9. USE ONLY PLENUM RATED CABLES.
10. DO NOT RUN ETHERNET CABLES PARALLEL TO POWER CABLES. CROSS POWER CABLES ONLY AT RIGHT ANGLES.
11. MAINTAIN 8" DISTANCE FROM ALL LIGHTING TRANSFORMERS.
12. COLOR AND STYLE OF TELECOMMUNICATION FACE PLATES SHALL MATCH ELECTRICAL FACE PLATES AND BE COORDINATED WITH AND CONFIRMED BY THE ARCHITECT.
13. OBTAIN AND EXTEND TO OWNER ALL AVAILABLE MANUFACTURER AND SYSTEM EXTENDED MANUFACTURER WARRANTEES. THE LOW VOLTAGE INSTALLATION CONTRACTOR SHALL SUBMIT ALL TEST RESULTS TO THE CABLE MANUFACTURER TO CERTIFY THE CABLING INSTALLATION AND ATTAIN AND DELIVER TO THE OWNER THE EXTENDED MANUFACTURER'S WARRANTY FOR MATERIAL AND WORKMANSHIP.
14. SPLICING CABLES IS NOT PERMITTED EXCEPT AS SPECIFICALLY NOTED.
15. DEVICE CABLING SHALL BE TERMINATED WITHIN THE INDICATED DATA ROOMS AND SHALL BE TERMINATED ONTO A 19" RACK MOUNTED, RJ45, 48 PORT, CATEGORY 6A RATED PATCH PANEL.
16. THE FOLLOWING CABLING SHALL BE TERMINATED ONTO IT'S OWN DISCRETE AND SEPARATE CATEGORY 6A RATED, RACK MOUNTED PATCH PANELS. REFER TO RACK ELEVATION DETAILS:
    A. ALL WIRELESS AP'S
    B. ALL VIDEO SURVEILLANCE CAMERAS (REFER TO SECURITY DRAWINGS FOR PLACEMENT)
17. LOCATIONS OF EQUIPMENT FOR ALL OTHER TRADES SHALL BE COORDINATED BEFORE CONSTRUCTION.
18. THE CONTRACTOR SHALL COORDINATE LAYOUT LOCATIONS AND CLEARANCE OF ALL EQUIPMENT WITH OTHER TRADES AND ATTAIN OWNER'S APPROVAL PRIOR TO INSTALLATION.
19. CONTRACTOR SHALL COORDINATE ALL RACEWAYS, LOCATIONS, AND POWER REQUIREMENTS WITH THE ELECTRICAL CONTRACTOR.
20. ALL VOICE AND DATA OUTLETS THAT DO NOT HAVE AN ELECTRICAL OUTLET WITHIN 3FT SHALL BE BROUGHT TO THE IMMEDIATE ATTENTION OF THE THE PROJECT ARCHITECT, CONSTRUCTION MANAGER, AND TECHNOLOGY CONSULTANT PRIOR TO THE TIME OF INSTALLATION.
21. ALL DEVICES SHOWN ON THESE PLANS MUST BE COORDINATED AND APPROVED BY THE ARCHITECT. THE INSTALLATION CONTRACTOR SHALL DEPICT ALL DEVICES ONTO ELEVATION SUBMITTALS BEFORE INSTALLATION. ANY DEVICE THAT IS NOT APPROVED BY THE ARCHITECT PRIOR TO INSTALLATION MAY BE REQUIRED TO BE RELOCATED AS DIRECTED BY THE ARCHITECT AND CORRECTED BY THE CONTRACTOR WITH NO ADDITIONAL CHARGE TO THIS PROJECT.
22. ALL PATHWAYS, INCLUDING ALL WALL AND CEILING PENETRATIONS ARE REQUIRED TO INSTALL CABLING TO THE END DEVICE AND SHALL BE COORDINATED BETWEEN THE LOW VOLTAGE AND SECURITY CONTRACTOR AND THE ELECTRICAL CONTRACTOR AND SHALL BE INCLUDED AS PART OF THIS SECTION.
23. SECURE ATTACHMENT OF TECHNOLOGY AND SECURITY DEVICES:
    A. TO ENSURE PROPER ATTACHMENT OF FIXTURES, FURNISHINGS & EQUIPMENT ITEMS, INCLUDING AND TECHNOLOGY ITEMS, WHERE "ITEMS" ARE ATTACHED TO WALL, CEILING, OVERHEAD STRUCTURE, AND/OR FLOOR, CONTRACTOR SHALL PROVIDE INFORMATION ADEQUATE FOR ARCHITECT TO VERIFY ITEMS, ATTACHED TO WALL, CEILING, AND/OR FLOOR ARE ATTACHED SECURELY AND PER MANUFACTURER'S RECOMMENDATIONS. ARCHITECT'S REVIEW MAY BE IMPLEMENTED DURING SUBMITTAL PROCESS.
    B. CONTRACTOR SHALL PROVIDE STRUTS, HANGERS, FASTENERS, SAFETY HARNESSES, CHANNELS, BOLTS, SCREWS, RODS, ETC. TO SECURELY ATTACH ITEMS TO THE EXISTING STRUCTURE AS REQUIRED TO MEET FIELD CONDITIONS AND MEET APPLICABLE CODES.
24. ALL CONDUIT IS INSTALLED TO ABOVE ACCESSIBLE CEILING UNLESS OTHERWISE NOTED.
25. PLACEMENT OF ALL SECURITY VIDEO SURVEILLANCE CAMERA CABLING MUST BE COORDINATED WITH THE SECURITY CONTRACTOR AND APPROVED BY THE SECURITY CONSULTANT AND/OR OWNER PRIOR TO CONSTRUCTION.

TECHNOLOGY ABBREVIATIONS

(NOTE: NOT ALL ABBREVIATIONS APPLICABLE)

AFF	ABOVE FINISH FLOOR
AFG	ABOVE FINISHED GRADE
A/C	ABOVE COUNTER
ACS	ACCESS CONTROL SYSTEM
ANSI	AMERICAN NATIONAL STANDARDS INSTITUTE
A/R	AS REQUIRED
AWG	AMERICAN WIRE GAUGE
BICSI	BUILDING INDUSTRY CONSULTING SERVICE INTERNATIONAL
BNC	BAYONET NEIL-CONCELMAN
C	CONDUIT(S)
DEMARC	DEMARCATION
DPDT	DOUBLE THROW DOUBLE PULL
EIA	ELECTRONICS INDUSTRIES ALLIANCE
EMT	ELECTRICAL METALLIC TUBING
FACP	FIRE ALARM CONTROL PANEL
F	FACSIMILE (FAX)
IDS	INTRUSION DETECTION SYSTEM
LAN	LOCAL AREA NETWORK
MER	MAIN EQUIPMENT ROOM
NEC	NATIONAL ELECTRIC CODE
NIC	NOT IN CONTRACT
NTS	NOT TO SCALE
OFE	OWNER FURNISHED EQUIPMENT
PA	PUBLIC ADDRESS
PBX	PRIVATE BRANCH EXCHANGE
PC	PERSONAL COMPUTER
PoE	POWER OVER ETHERNET
PP	PATCH PANEL
PVC	POLYVINYL CHLORIDE CONDUIT
QYT	QUANTITY
STP	SHIELDED TWISTED PAIR
TBB	TELECOMMUNICATIONS BONDING BACKBONE
TGB	TELECOMMUNICATIONS GROUNDING BUSBAR
TIA	TELECOMMUNICATIONS INDUSTRY ASSOCIATIONS
TMGB	TELECOMMUNICATIONS MAIN GROUNDING BUSBAR
TR	TELECOMMUNICATIONS ROOM
TV	TELEVISION
TYP	TYPICAL
UON	UNLESS OTHERWISE NOTED
UPS	UNINTERRUPTIBLE POWER SUPPLY
UTP	UNSHIELDED TWISTED PAIR
VGA	VIDEO GRAPHICS ARRAY
VoIP	VOICE OVER INTERNET PROTOCOL
VSS	VIDEO SURVEILLANCE SYSTEM
W	WALL TELEPHONE (VOICE)
WAN	WIDE AREA NETWORK
WAO	WORK AREA OUTLET
WAP	WIRELESS (DATA) ACCESS POINT
WG	WIRE GUARD
WP	WEATHERPROOF

GENERAL PLAN SYMBOLS

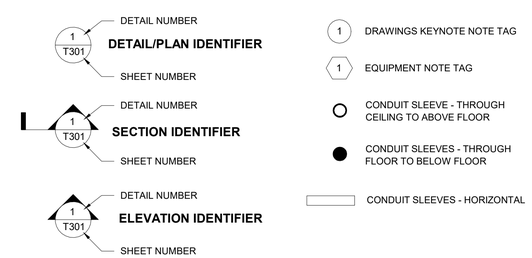

Architecture
Engineering
Environmental
Land Surveying
BL Companies

355 Research Parkway
Meriden, CT 06450
(203) 630-1406
(203) 630-2615 Fax

DENNIS MICHAEL BURTON
No. 15185
REGISTERED
PROFESSIONAL ENGINEER
(ELECTRICAL)

PAWTUCKET-CENTRAL FALLS TRANSIT CENTER
300 PINE STREET PAWTUCKET, RI

REVISIONS

NO	DATE	DESCRIPTION

Designed:	Marc D'Agostino
Drawn:	MJD
Reviewed:	NAD
Project No.:	230115
Date:	04/09/2024

Issued for:
CONSTRUCTION DOCUMENTS

Title:
TECH & SEC- SYMBOL LEGEND AND GENERAL NOTES

Sheet No.
T001

4/9/2024 10:08:21 AM Autodesk Docs://RIPTA/2024.02.05_2301115_RIPTA_PassengerFacility_R23_TECH-SEC.rvt

© 2022 BL COMPANIES, INC. THESE DRAWINGS SHALL NOT BE UTILIZED BY ANY PERSON, FIRM OR CORPORATION WITHOUT THE SPECIFIC WRITTEN PERMISSION OF BL COMPANIES.

DRAWING KEYNOTES

1. ETHERNET REQUIRED FOR FIRE ALARM. COORDINATE LOCATION AND TERMINATIONS WITH FIRE ALARM CONTRACTOR.

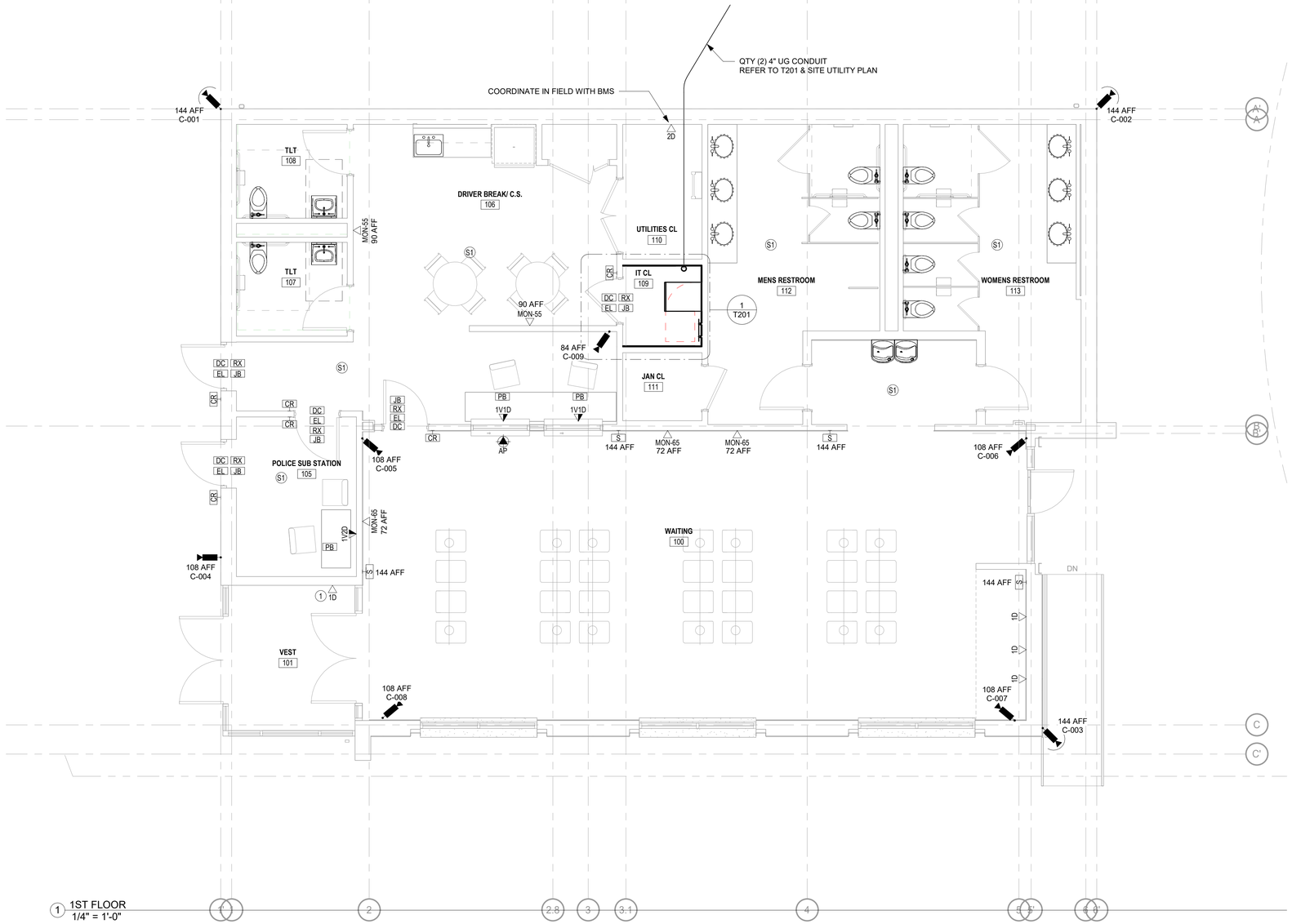

2 PAGING WIRING DIAGRAM
NTS

CAMERA SCHEDULE

CAM #	MANUFACTURER	MODEL	MOUNTING HEIGHT IN INCHES
C-001	Axis	P3737-PLE	144
C-002	Axis	P3737-PLE	144
C-003	Axis	P3737-PLE	144
C-004	Axis	P3827-PVE	108
C-005	Axis	P3267-LV	108
C-006	Axis	P3267-LV	108
C-007	Axis	P3267-LV	108
C-008	Axis	P3267-LV	108
C-009	Axis	P3267-LV	84

TRUE NORTH

Architecture
Engineering
Environmental
Land Surveying
BL Companies

355 Research Parkway
Meriden, CT 06450
(203) 630-1406
(203) 630-2615 Fax

DENNIS MICHAEL BURTON
No. 15185
REGISTERED
PROFESSIONAL ENGINEER
(ELECTRICAL)

PAWTUCKET-CENTRAL FALLS TRANSIT CENTER
300 PINE STREET PAWTUCKET, RI

REVISIONS

NO	DATE	DESCRIPTION

Designed:	Marc D'Agostino
Drawn:	MJD
Reviewed:	NAD
Project No.:	230115
Date:	04/09/2024
Issued for:	CONSTRUCTION DOCUMENTS

Title: TECH & SEC- FIRST FLOOR PLAN

Sheet No.

T101

4/9/2024 10:08:23 AM Autodesk Docs://RIPTA/2024.02.05_2301115_RIPTA_PassengerFacility_R23_TECH-SEC.rvt

© 2022 BL COMPANIES, INC. THESE DRAWINGS SHALL NOT BE UTILIZED BY ANY PERSON, FIRM OR CORPORATION WITHOUT THE SPECIFIC WRITTEN PERMISSION OF BL COMPANIES.

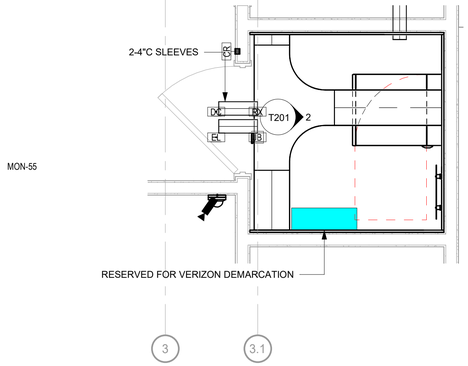

1 IT ROOM 109 PLAN VIEW
1/2" = 1'-0"

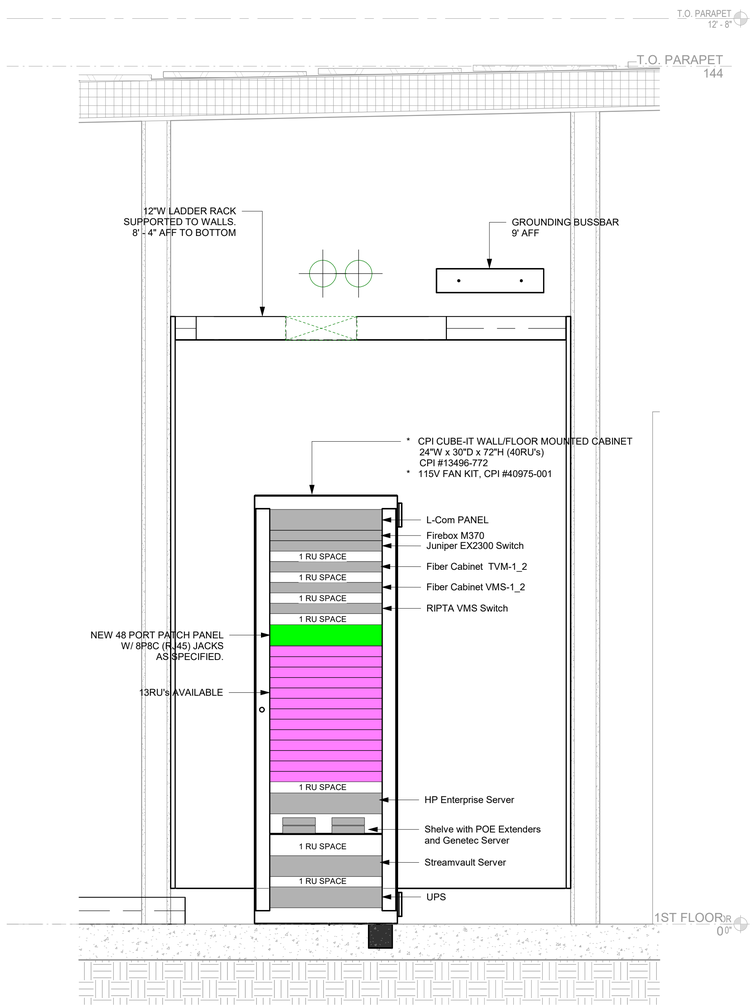

NOTE:
1. ITEMS SHOWN IN GRAY ARE TO BE RELOCATED FROM EXTERIOR ENCLOSURE TO THIS CABINET. REFER TO PICTURE.

2 IT ROOM 109 ELEVATION
1" = 1'-0"

INSTALL (1) 4" CONDUIT BETWEEN
EXTERIOR SECURITY CABINET
AND NEW IT DATA ROOM #109.

SITE PLAN - NTS - REFER TO SITE PLAN DRAWINGS.
CONDUIT ROUTE TO BE FIELD VERIFIED

RELOCATE ALL EQUIPMENT FROM EXTERIOR SECURITY CABINET INTO THE NEW CABINET IN IT DATA ROOM #109. COORDINATE AND SCHEDULE WITH OWNER IT DEPRTMENT PRIOR TO POWERING DOWN AND RELOCATING EQUIPMENT.
REFER TO DETAIL 2 FOR LOCATION OF DEVICES.

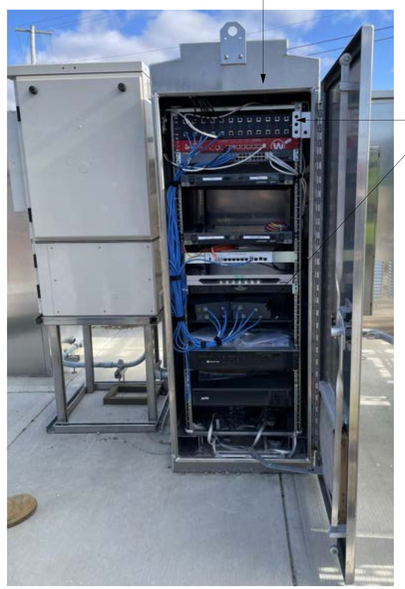

TERMINATE ALL EXISTING CAMERAL ETHERENT CABLING ONTO A CATEGORY 6A TERMINATION BLOCK (CONSOLIDATION POINT). EXTEND ALL CABLES INTO THE NEW IT DATA ROOM #109 AND TERMINATE ONTO THE 48 PORT PATCH PANEL. LABEL BOTH ENDS AND TEST CABLING AS SPEECIFIED.

EXTERIOR SECURITY CABINET

Architecture
Engineering
Environmental
Land Surveying
BL Companies
355 Research Parkway
Meriden, CT 06450
(203) 630-1406
(203) 630-2615 Fax

DENNIS MICHAEL BURTON
No. 15185
REGISTERED
PROFESSIONAL ENGINEER
(ELECTRICAL)

PAWTUCKET-CENTRAL FALLS TRANSIT CENTER
300 PINE STREET PAWTUCKET, RI

REVISIONS

NO	DATE	DESCRIPTION

Designed:	Marc D'Agostino
Drawn:	MJD
Reviewed:	NAD
Project No.:	230115
Date:	04/09/2024

Issued for:
CONSTRUCTION DOCUMENTS

Title:
TECH & SEC- DATA ROOM DETAILS

Sheet No.
T201

4/9/2024 10:08:24 AM Autodesk Docs://RIPTA/2024.02.05_2301115_RIPTA_PassengerFacility_R23_TECH-SEC.rvt

© 2022 BL COMPANIES, INC. THESE DRAWINGS SHALL NOT BE UTILIZED BY ANY PERSON, FIRM OR CORPORATION WITHOUT THE SPECIFIC WRITTEN PERMISSION OF BL COMPANIES.

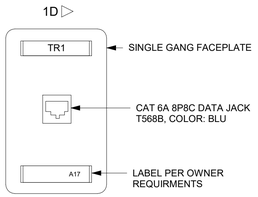

1 DATA OUTLET DETAIL - 1D
12" = 1'-0"

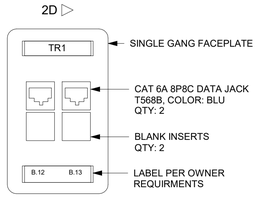

2 DATA OUTLET DETAIL - 2D
12" = 1'-0"

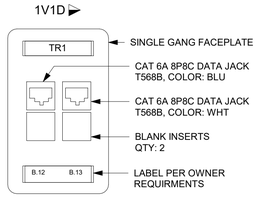

3 DATA OUTLET DETAIL - 1V1D
12" = 1'-0"

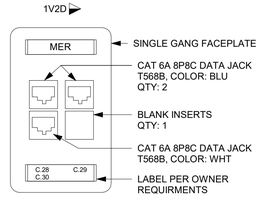

4 DATA OUTLET DETAIL - 1V2D
12" = 1'-0"

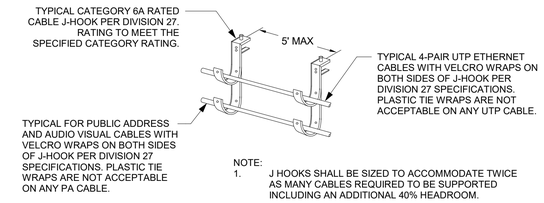

NOTE:
1. J HOOKS SHALL BE SIZED TO ACCOMMODATE TWICE AS MANY CABLES REQUIRED TO BE SUPPORTED INCLUDING AN ADDITIONAL 40% HEADROOM.

5 J-HOOK INSTALLATION - CABLING SUPPORT
12" = 1'-0"

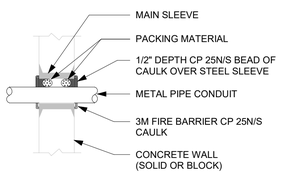

6 FIRE STOP DETAIL
12" = 1'-0"

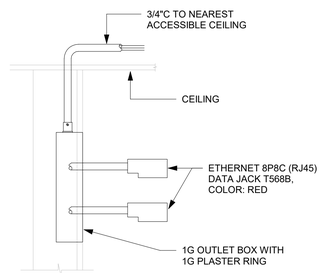

7 WAP - WALL MOUNTED CABLING
12" = 1'-0"

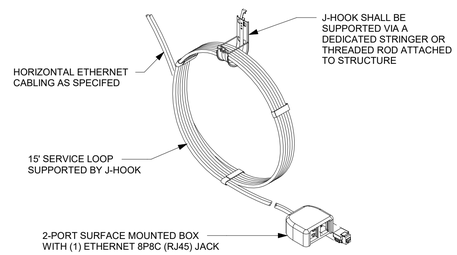

8 WAP - CEILING MOUNTED CABLING
12" = 1'-0"

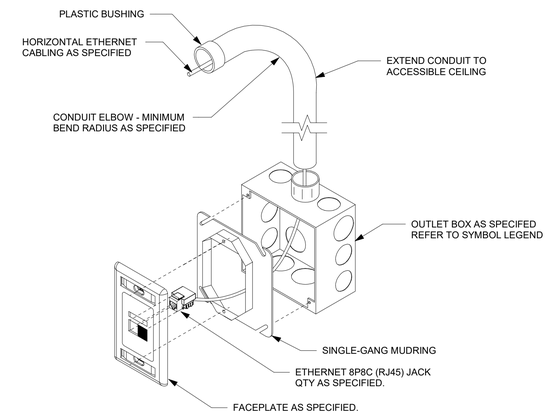

9 TELECOMMUNICATIONS DEVICE OUTLET ASSEMBLY
12" = 1'-0"

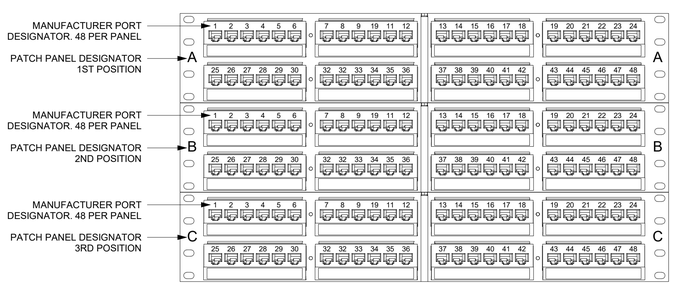

NOTE: CONTINUE LETTERING PATCH PANELS ALPHABETICALLY FOR EACH ADDITIONAL PATCH PANEL.

10 PATCH PANEL LABELING
12" = 1'-0"

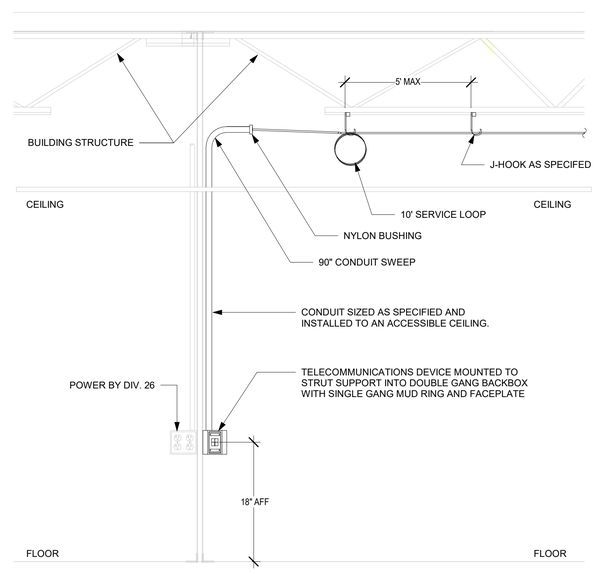

11 TELECOMMUNICATIONS DEVICE MOUNTING TO STRUT SUPPORT
12" = 1'-0"

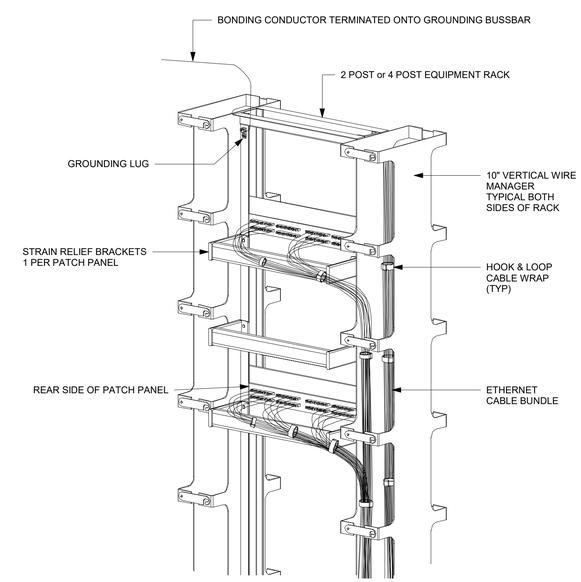

12 TYP RACK ASSEMBLY DETAIL
12" = 1'-0"

Architecture
Engineering
Environmental
Land Surveying
BL Companies

355 Research Parkway
Meriden, CT 06450
(203) 630-1406
(203) 630-2615 Fax

DENNIS MICHAEL BURTON
No. 15185
REGISTERED
PROFESSIONAL ENGINEER
(ELECTRICAL)

PAWTUCKET-CENTRAL FALLS TRANSIT CENTER
300 PINE STREET PAWTUCKET, RI

REVISIONS

NO	DATE	DESCRIPTION

Designed:	Marc D'Agostino
Drawn:	MJD
Reviewed:	NAD
Project No.:	230115
Date:	04/09/2024

Issued for:
CONSTRUCTION DOCUMENTS

Title:
TECH & SEC- DETAILS

Sheet No.
T301

4/9/2024 10:08:25 AM Autodesk Docs://RIPTA/2024.02.05_2301115_RIPTA_PassengerFacility_R23_TECH-SEC.rvt

© 2022 BL COMPANIES, INC. THESE DRAWINGS SHALL NOT BE UTILIZED BY ANY PERSON, FIRM OR CORPORATION WITHOUT THE SPECIFIC WRITTEN PERMISSION OF BL COMPANIES.

IDS & ACS DOOR KEYNOTES

1. 4"X4"X2-1/8" DEEP JUNCTION BOX (JB) ON SECURE SIDE, ABOVE ACCESSIBLE CEILING FURNISHED AND INSTALLED BY GENERAL CONTRACTOR.
2. 1" CONDUIT TO [JB] FOR SECURITY COMPOSITE CABLE FURNISHED AND INSTALLED BY GENERAL CONTRACTOR.
3. 3/4" CONDUIT TO [JB] FOR SECURITY DEVICES FURNISHED AND INSTALLED BY GENERAL CONTRACTOR. TYPICAL FOR ALL DEVICES.
4. CARD READER [CR] - FURNISHED AND INSTALLED BY SECURITY CONTRACTOR. SINGLE GANG ELECTRICAL BOX FLUSH MOUNTED 46" A.F.F. ON UNSECURED SIDE FURNISHED AND INSTALLED BY GENERAL CONTRACTOR.
5. ELECTRIFIED TRANSFER HINGE (12 CONDUCTOR MINIMUM) AND WIREWAY TO CRASH BAR FURNISHED AND INSTALLED BY DIVISION 08 DOOR HARDWARE.
6. CRASH BAR WITH ELECTRIFIED TRIM AND INTEGRATED REQUEST-TO-EXIT [REX] - CRASH BAR AND TRIM FURNISHED AND INSTALLED BY DIVISION 08 DOOR HARDWARE. CONNECTION TO ELECTRIFIED TRANSFER HINGE FOR LOCK AND REX BY SECURITY CONTRACTOR. DOOR PREP BY GENERAL CONTRACTOR.
7. NON-ELECTRIFIED CRASH BAR AND TRIM LOCK FURNISHED AND INSTALLED BY DIVISION 08 DOOR HARDWARE.
8. DOOR POSITION SWITCH FURNISHED AND INSTALLED BY DIVISION 08 DOOR HARDWARE. CABLED BY SECURITY CONTRACTOR. DOOR AND FRAME PREP BY GENERAL CONTRACTOR.
9. COMPOSITE ACCESS CONTROL CABLE FURNISHED AND INSTALLED BY SECURITY CONTRACTOR.
10. REQUEST TO EXIT [REX] MOTION SENSOR INSTALLED ON SECURED SIDE OF DOOR FURNISHED AND INSTALLED BY SECURITY CONTRACTOR. SINGLE GANG ELECTRICAL BOX FLUSH MOUNTED HORIZONTALLY @ 6'-8"AFF ON UNSECURED SIDE OF DOOR FURNISHED AND INSTALLED BY GENERAL CONTRACTOR.
11. ELECTRIC STRIKE FURNISHED AND INSTALLED BY DIVISION 08 DOOR HARDWARE. CABLE AND CONNECTION BY SECURITY CONTRACTOR

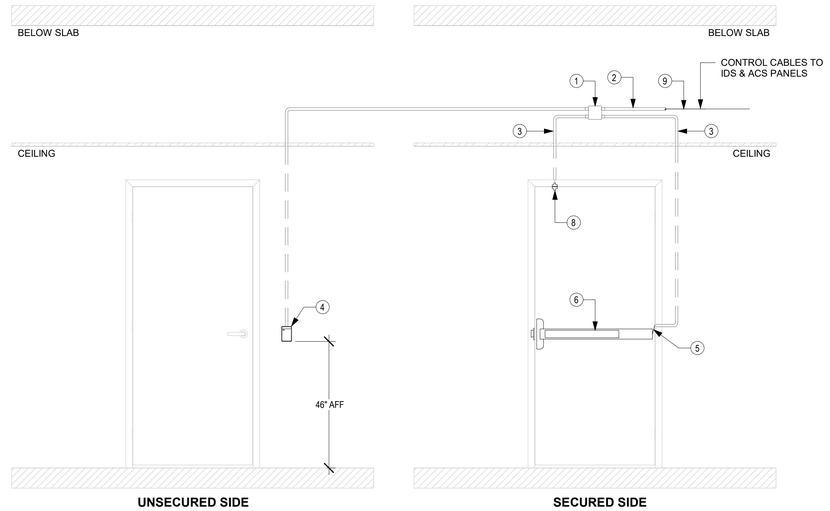

NOTE: REFER TO ACS & IDS DOOR KEYNOTES - THIS SHEET.

1 ACS - SINGLE DOOR W/ELECTRIC TRANSFER HINDGE
12" = 1'-0"

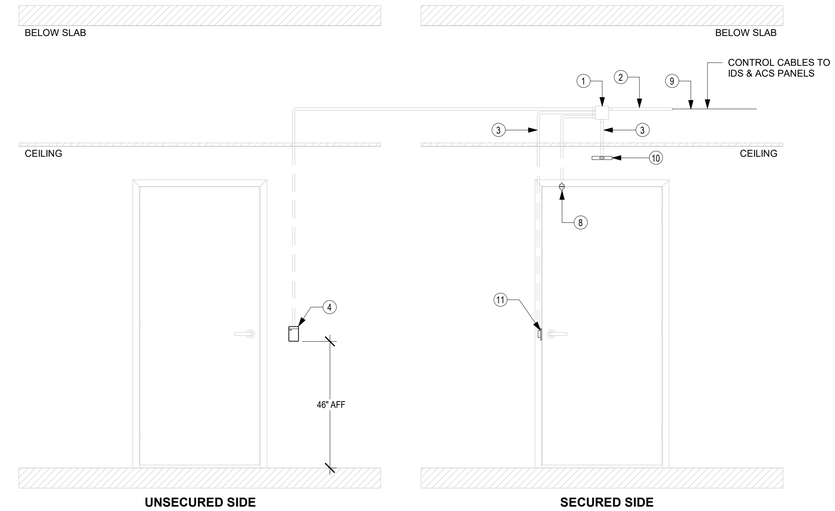

NOTE: REFER TO ACS & IDS DOOR KEYNOTES - THIS SHEET.

2 ACS - SINGLE DOOR W/ELECTRIC STRIKE
12" = 1'-0"

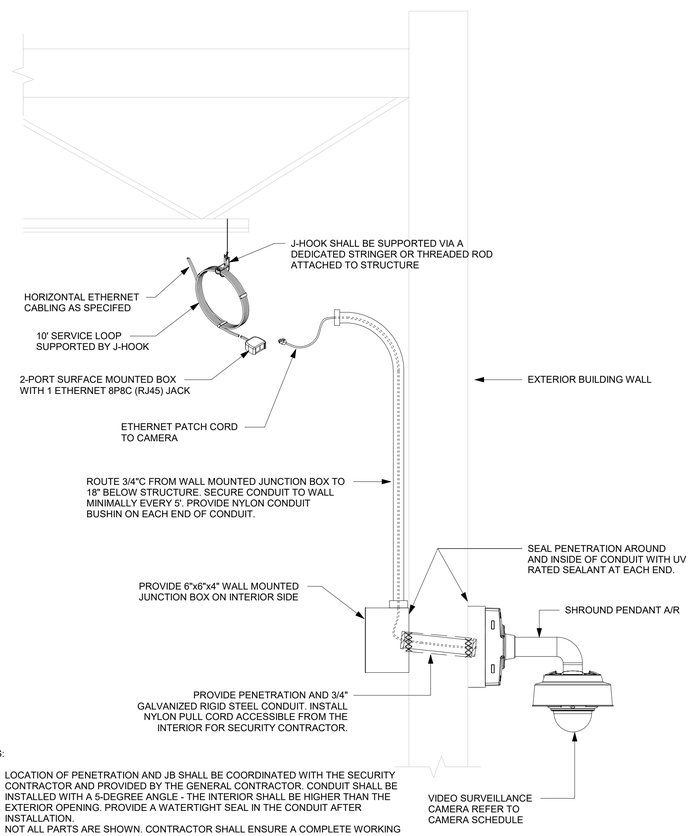

NOTES:

1. LOCATION OF PENETRATION AND JB SHALL BE COORDINATED WITH THE SECURITY CONTRACTOR AND PROVIDED BY THE GENERAL CONTRACTOR. CONDUIT SHALL BE INSTALLED WITH A 5-DEGREE ANGLE - THE INTERIOR SHALL BE HIGHER THAN THE EXTERIOR OPENING. PROVIDE A WATERTIGHT SEAL IN THE CONDUIT AFTER INSTALLATION.
2. NOT ALL PARTS ARE SHOWN. CONTRACTOR SHALL ENSURE A COMPLETE WORKING INSTALLATION.

3 CAMERA - EXTERIOR WALL MOUNTED W/ PENDANT
12" = 1'-0"

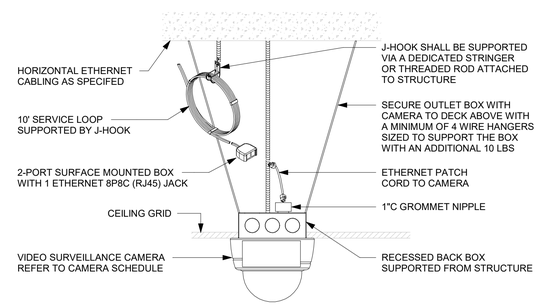

4 CAMERA - INTERIOR CEILING MOUNT
12" = 1'-0"

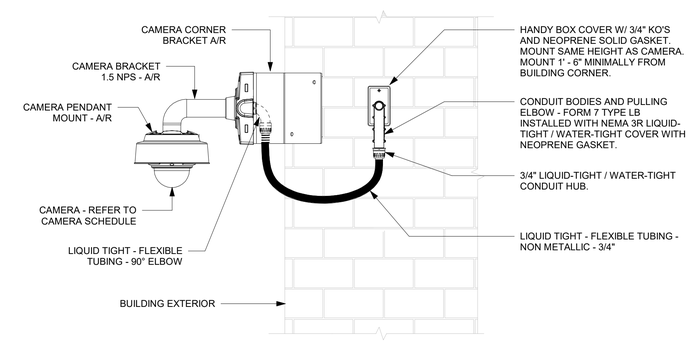

6 CAMERA - EXTERIOR CORNER MOUNT
12" = 1'-0"

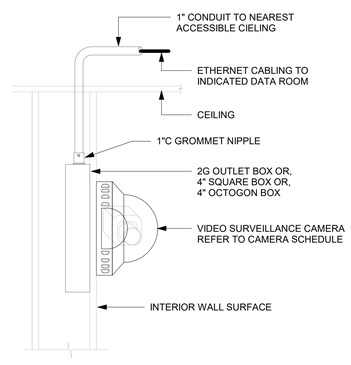

5 CAMERA - INTERIOR WALL MOUNT
12" = 1'-0"

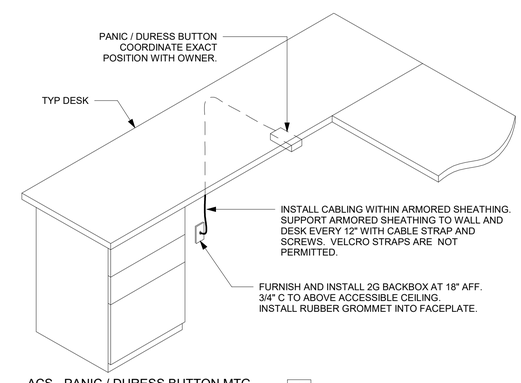

7 ACS - PANIC / DURESS BUTTON MTG DETAIL
12" = 1'-0"

PB

Architecture
Engineering
Environmental
Land Surveying
BL Companies

355 Research Parkway
Meriden, CT 06450
(203) 630-1406
(203) 630-2615 Fax

DENNIS MICHAEL BURTON
No. 15185
REGISTERED PROFESSIONAL ENGINEER (ELECTRICAL)

PAWTUCKET-CENTRAL FALLS TRANSIT CENTER
300 PINE STREET PAWTUCKET, RI

REVISIONS

NO	DATE	DESCRIPTION

Designed:	Marc D'Agostino
Drawn:	MJD
Reviewed:	NAD
Project No.:	230115
Date:	04/09/2024
Issued for:	CONSTRUCTION DOCUMENTS

Title: TECH & SEC- DETAILS

Sheet No. T302

4/9/2024 10:08:26 AM Autodesk Docs://RIPTA/2024.02.05_2301115_RIPTA_PassengerFacility_R23_TECH-SEC.rvt

© 2022 BL COMPANIES, INC. THESE DRAWINGS SHALL NOT BE UTILIZED BY ANY PERSON, FIRM OR CORPORATION WITHOUT THE SPECIFIC WRITTEN PERMISSION OF BL COMPANIES.

RHODE ISLAND PUBLIC TRANSIT AUTHORITY

Pawtucket Passenger Facilities Building

Specifications

Dated: 4/9/24

Location:
300 Pine Street,
Pawtucket, RI 02860

Owner:
RIPTA – Rhode Island Public Transit Authority
705 Elmwood Avenue
Providence, RI 02907

Designer:
BL Companies
2346 Post Road Suite 100
Warwick, RI 02886

SECTION 00 01 00 – TABLE OF CONTENTS

SECTION TITLE

Division 00 - Introductory Information

00 01 00 Table of Contents ----------

00 10 50 List of Drawings----------

00 10 00 RFP Solicitation Summary----------

00 41 00 Bid Form----------

Division 01 – General Requirements

01 10 00 Summary ----------

01 21 00 Allowances----------

01 22 00 Unit Prices----------

01 25 00 Substitution Procedures----------

01 31 00 Project Management and Coordination----------

01 33 00 Submittal Procedures ----------

01 40 00 Quality Requirements ----------

01 42 00 References ----------

01 50 00 Temporary Facilities and Controls----------

01 55 26 Traffic Control----------

01 56 16 Sweeping and Water for Dust Control----------

01 71 13 Mobilization ----------

01 73 00 Execution----------

01 77 00 Closeout Procedures----------

01 78 39 Project Record Documents----------

01 91 13 General Commissioning Requirements ----------

Division 02- Existing Conditions

02 4115 Pavement Removal----------

02 4119 Selective Demolition ----------

Division 03- Concrete

03 2000 Concrete Reinforcement (Site) ----------

03 3000 Case-in-place Concrete (Site) ----------

03 50 00 Cast-in-Place Concrete----------

03 35 43 Polished Concrete Finishing ----------

03 35 43.13 Polished Dyed Concrete Finishing----------

Division 04 - Masonry

04 05 11 Mortar ----------

04 26 13 Masonry Veneer----------

04 27 23 Cavity Wall Unit Masonry ----------

04 72 00 Cast Stone Masonry ----------

Division 05 - Metals

05 05 13 Shop-Applied Fluoropolymer Coatings for Metal ----------

05 12 00 Structural Steel ----------

05 30 00 Metal Deck----------

05 31 00 Toris 4A Metal Deck ----------

05 40 00 Cold-Formed Metal Framing ----------

05 50 00 Metal Fabrications ----------

05 52 13 Pipe and Tube Railings ----------

Division 06 – Wood, Plastics, Composites

06 10 53 Misc Rough Carpentry ----------

06 40 23 Interior Architectural Woodwork ----------

06 61 16 Solid Surfacing Fabrications ----------

06 83 16 Fiberglass Reinforced Paneling ----------

Division 07 – Thermal and Moisture Protection

07 21 00 Thermal Insulation----------

07 21 19 Foamed-In-Place Insulation----------

07 27 13 Fire Resistant Self-Adhering Membrane Air + Vapor Barriers----------

07 41 00 Preformed Metal Wall Panels----------

07 41 13 Preformed Metal Standing Seam Roofing----------

07 54 00 Thermoplastic Membrane Roofing ----------

07 62 00 Sheet Metal Flashing and Trim----------

07 71 00 Roof Specialties----------

07 72 00 Roof Accessories ----------

07 92 00 Joint Sealants----------

Division 08 - Openings

08 11 13 Hollow Metal Doors and Frames ----------

08 1416 Flush Wood Doors ----------

08 31 13 Access Doors and Frames ----------

08 43 13 Aluminum-Framed Storefronts ----------

08 71 00 Door Hardware ----------

08 80 00 Glazing ----------

Division 09 - Finishess

09 21 16 Gypsum Board Assemblies----------

09 30 00 Tiling----------

09 51 13 Acoustical Panel Ceilings ----------

09 65 13 Resilient Base and Accessories----------

09 91 00 Painting ----------

09 97 13 Thermal Insulating Coating ----------

Division 10 - Specialties

10 12 00 Display Cases ----------

10 14 00 Signage----------

10 28 00 Toilet Compartments ----------

10 28 00 Toilet and Bath Accessories----------

10 44 13 Fire Protection Cabinets ----------

10 44 16 Fire Extinguishers ----------

10 73 13 Standing Seam Metal Awnings----------

Division 11 - Equipment

11 30 13 Residential Appliances ----------

Division 12 - Furnishings

12 48 16 Entrance Floor Grilles ----------

Division 22 - Plumbing

22 05 00 Common Work Results for Plumbing----------

22 05 13 Common Motor Requirements for Plumbing Equipment----------

22 05 16 Expansion Fittings and Loops for Plumbing Piping----------

22 05 17 Sleeves & Sleeve Seals for Plumbing Piping ----------

22 05 18 Escutcheons for Plumbing Piping----------

22 05 19 Meters and Gages for Plumbing Piping----------

22 05 23 General-Duty Valves for Plumbing Piping----------

22 05 29 Hangers & Supports for Plumbing Piping & Equipment ----------

22 05 48 Vibration & Seismic Controls for Plumbing Piping & Equipment----------

22 05 53 Identification for Plumbing Piping & Equipment ----------

22 07 16 Plumbing Equipment Insulation ----------

22 07 19 Plumbing Piping Insulation----------

22 08 00 Commissioning of Plumbing----------

22 1113 Facilities Water Distribution Piping (Site)----------

22 11 16 Domestic Water Piping ----------

22 13 16 Sanitary Waste and Vent Piping ----------

22 16 00 Natural Gas Piping System----------

22 42 00 Commercial Plumbing Fixtures ----------

22 42 16.01 Commercial Lavatories and Faucets----------

Division 23 – HVAC

23 05 13 Common Motor Requirements for HVAC Equipment----------

23 05 29 Hangers and Supports for HVAC Piping and Equipment----------

23 05 48 Vibration and Seismic Controls for HVAC ----------

23 05 53 Identification for HVAC Piping and Equipment ----------

23 05 93 Testing, Adjusting, and Balancing for HVAC ----------

23 07 13 Duct Insulation----------

23 07 16 HVAC Equipment Insulation ----------

23 07 19 HVAC Piping Insulation ----------

23 08 00 Commissioning for HVAC----------

23 09 23 Direct Digital Control (DDC) System for HVAC ----------

23 23 00 Refrigerant Piping----------

23 31 13 Metal Ducts----------

23 33 00 Air Duct Accessories----------

23 33 46 Flexible Ducts ----------

23 34 16 Centrifugal HVAC Fans ----------

23 37 13.13 Air Diffusers ----------

23 37 13 Registers and Grilles----------

23 41 00 Particulate Air Filtration. ----------

23 74 16.13 Packaged, Rooftop Air-Conditioning Units----------

23 81 26 Split-System Air-Conditioners----------

23 82 39.19 Wall and Ceiling Unit Heaters----------

Division 26 – Electrical

26 00 00 Electrical General----------

26 05 19 Conductors----------

26 05 26 Grounding----------

26 05 29 Hangers and Supports for Electrical System ----------

26 05 30 Firestopping for Electrical System ----------

26 05 33 Conduit and Raceways ----------

26 05 34 Outlet Boxes and Junction Boxes----------

26 05 35 Low Voltage Backboards & Enclosures ----------

26 0543 Underground Ducts and Raceways for Electrical System ----------

26 05 53 Identification for Electrical Systems ----------

26 05 73 Overcurrent Protective Device Coordination Study ----------

26 09 23 Occupancy Sensors ----------

26 09 43 Lighting Control System - Relay Panels ----------

26 24 16 Panelboards ----------

26 27 26 Wiring Device ----------

26 28 16 Disconnect Switches ----------

26 2818 Enclosed Circuit Breakers ----------

26 29 13 Enclosed Controllers Contactors and Relays ----------

26 43 13 Surge Protective Devices ----------

26 51 00 Lighting ----------

26 81 15 Emergency Responder Radio Coverage System ----------

Division 27 – Communications

27 10 00 Structured Cabling ----------

Division 28 – Electronic Safety and Security

28 13 00 Access Control System ----------

28 23 00 Video Surveillance System ----------

Division 31 – Earthwork

31 10 00 Site Clearing ----------

31 21 00 Earthwork ----------

31 21 00.01 Topsoil ----------

31 23 16 Excavation----------

31 23 23 Fill ----------

31 2500 Sedimentation and Erosion Control ----------

31 50 00 Excavation Support and Protection----------

Division 32 – Exterior Improvements

32 01 00 Restoration ----------

32 12 16 Asphalt Paving ----------

32 13 13 Concrete Paving ----------

32 13 73 Concrete Paving Joint Sealants ----------

32 17 00 Site Improvements----------

32 33 00 Site Furnishings ----------

32 92 18 Landscaping ----------

Division 33 – Utilities

33 31 11 Site Sanitary Sewerage Utilities----------

33 41 13 Site Stormwater Utilities ----------

33 51 11 Site Natural Gas Distribution ----------

*****END OF SECTION*****

SECTION 00 01 50 – LIST OF DRAWINGS

Pawtucket Bus Hub Building

DRAWING NO.	DRAWING TITLE

SEE COVER PAGE ON DRAWINGS FOR LIST OF DRAWINGS

*****END OF SECTION*****

SECTION 00 10 00 – RFP SOLICITATION SUMMARY

General Information			
Project Name	Pawtucket Passenger Facilities Building		
Project Description	Construction of a 2,600 sf passenger facility building that includes public restrooms, driver restrooms, driver break room, Pawtucket Police sub-station, and an interior waiting area with seating and real-time passenger information screens. Bus Hub and Train Station must remain operational during construction.		
Project Start Date/Length	Summer 2024		
Completion	Fall 2025		
Contract Type	AIA Documents		
Funding Source	☐ Local	☒ State	☐ Federal
DBE Goal	DBE participation encouraged, not required		
Pre-Bid Meeting	**<u>Optional</u>** **Date: May 6, 2024** **Time: 1:00 PM** **Location: 300 Pine Street, Pawtucket, RI 02860**		
Procurement Process Information			
Contract Manager ***All correspondence during RFP must be through the Contract Manager.**	Sheryl Gomes, Contract Manager Purchasing Department, Room 217 705 Elmwood Avenue, Providence, RI 02907 401-781-9400, x1218, sgomes@ripta.com		

Projected RFP Schedule: ***Please refer to RIPTA Procurement for updates to all dates and times.***

Issue Request for Proposals	04/23/2024	
Onsite Pre-Bid Meeting	05/06/2024	1:00 PM
Deadline to submit Questions and Request for Approved Equals to RIPTA	05/13/2024	1:00 PM
Deadline to Submit Proposals	05/23/2024	1:00 PM
Board Consideration of Approval	6/27/24	
Notice of Award to Bidder	6/28/24	
Start of Construction	Summer 2024	
Construction Complete	Fall 2025	

Proposal Evaluation Criteria: Candidates shall be evaluated based upon their qualifications and responsiveness to the RFP. Final selection shall be based on the following: A. Qualifications / Experience / Past performance in comparable projects. B. Proposed Project Timeline C. Proposed Phasing of work. D. Safety Program E. Experience with construction administrative procedures. F. Pricing Respondents can be awarded up to 100 points based on the requested information in the evaluation criteria. Proposals will be evaluated by an evaluation committee and scored based on the established weights set forth.	***Qualifications /Experience /Past Performance in comparable projects – (20 points)*** -Describe your company's qualifications as it relates to the scope of this work (certifications, licenses, etc…) -Provide examples of experience in ongoing and completed projects with similar scope. ***Timeline (20 Points)*** Each proposal should include a project schedule that includes all major milestones, phases of construction, and completion date. A schedule limiting the duration of the project, interruptions of service, and inactivity after mobilization is favorable. ***Phasing Plans (10 Points)*** Each proposal should include an annotated plan view of the construction area and required narrative for each milestone and/or anticipated phases of construction by Contractor. ***Safety Program (10 Points)*** Each proposal should include a brief description of the contractor's commitment to safety and EMR rating. Please include information on Contractor's safety policies, procedures, department, documentation, and personnel training as it relates to the project. ***Experience with Construction Administrative Procedures (15 points)*** Describe your company's experience/procedures in handling the administrative side of construction as it relates to: Construction management software, Scheduling, Submittals, Quality control, Invoicing, Project documentation, Closeout documentation and As-Built drawings ***Pricing (25 Points)*** The respondent can receive up to **25 points** for their proposed pricing and responsiveness to scope. This pricing must be inclusive of all scope outlined in the project RFP, schedule, drawings, and specifications. Proposal will not be considered if scope items are excluded within the proposal.
Basis of Award	This contract will be awarded to the contractor that submits the highest rated proposal of those received. Proposed pricing of project is only a portion of the criteria considered during award. The Rhode Island Public Transit Authority (RIPTA), reserves the right to cancel this RFP, or reject any or all proposals or parts thereof, to waive any formality in same, or accept any proposal deemed to be in the best interest of RIPTA. Any proposal not received by the designated date and time will be determined late and not be considered. Applicants may withdraw their proposals by written request, prior to, but not after the set time for proposal submission. Thereafter, proposals are irrevocable for a period of not less than one-hundred twenty (120) days, and may not be withdrawn or modified.
Liquidated Damages	None
Project Incentives	None

Proposal Contents

Proposal Copies Required:

- One (1) Original
- Two (2) Printed Copies
- One (1) Electronic Copies (thumb drive)

Proposal Content:

- Proposal shall include information that addresses all aspects of the proposal evaluation criteria and any other pertinent information.
- Completed Bid Form "Attachment D"
- Completed forms from RIPTA Procurement's "Request for Proposal" listed below:
  - *Label (affix to package containing proposal response document) second Page of RFP Document.*
  - *Required Company Information Form, Third page of RFP Document.*
  - *Solicitation Form, p.50*
  - *Offer Form, p.51*
  - *Statement of Eligibility Form, p.52*
  - *Affidavit of Non-Collusion Form, p.53*
  - *Certification of Restrictions on Lobbying Form, p.54*
  - *Buy America Certification Requirements For Procurement of Steel or Manufactured Products, p.55*
  - *Buy America Certification Requirements of Procurement of Buses, Rolling Stock, and Associated Equipment, p.56*
  - *Schedule of DBE Participation, p.66 (if applicable)*
  - *DBE Application Agreement, p.67 (if applicable)*
  - *Letter of Intent to Perform as a Sub-contractor, p.68*
  - *DBE Good Faith Effort Summary Sheet, p.69 (if applicable)*
  - *Narrative Explanation for Lack of DBE Participation, p.70 (if applicable)*
  - *Documentation of DBE Utilization F, p.71 (if applicable)*
  - *General Contract Compliance Certificate & Agreement Form (EEO), p.80*
  - *Contractor Apprenticeship Certification Form, p.81*
  - *Certification of Primary Participant Form, p.82*
  - *Debarment Certification, P.83*
  - *Drug & Alcohol Testing Program (if applicable), p.85*

RFP Documents

Attachment A: Drawings - Dated: 4/9/24
Attachment B: Specifications – Dated: 4/9/24
Attachment C: Bid Form
Attachment D: Soil Management Plan – To be released via addendum.

BACKGROUND

RIPTA recorded 97,916 passenger trips at the Pawtucket-Central Falls Transit Center from its opening on January 23, 2023 through December 31, 2023.

SCOPE OF Project:

The construction of the 2,600 SF passenger facilities building with restrooms, waiting area, offices, and break room. Scope includes the building, associated utility connections, sitework, remediation of soils, and all construction administrative paperwork and procedures as specified.

*****END OF SECTION*****

SECTION 00 41 00 - BID FORM

Pawtucket Passenger Facilities Building

300 Pine Street, Pawtucket, RI 02860

BIDDER INFORMATION

Contractors Name: _____

Street Address: _____

City, State, Zip: _____

Phone: _____

Contact Person: _____

Date Completed: _____

OFFER

A. Having examined the place of the Work and all matters referred to in the Contract Documents prepared by BL Companies (Owner's designee for the above-mentioned project) and Rhode Island Public Transit Authority (Owner), we, the undersigned, hereby offer to enter into a Contract to perform the Work, Pawtucket Passenger Facilities Building, for the amount indicated below, subject to the additions and deductions according to the terms of the Contract Documents and as stated below. The undersigned will provide all necessary and proper material, machinery, equipment, facilities, and means to complete the Work.

B. This bid includes Addenda numbered (to be filled in by Bidder, if addenda are issued):

   Addenda No. 1 Dated: _____

   Addenda No. 2 Dated: _____

C. The undersigned herby understands that the Owner has the right to reject any and all bids and to award the contract in the best interest of the Owner. The Owner reserves the right to award the entire project or delete portions of the work to funds available, whichever is in the best interest of the Owner.

D. The undersigned also understands that the contract must be carried out in strict accordance with the Contract Documents.

LUMP SUM BASE BID

Lump Sum Bid Price In Words	Lump Sum Bid – In Figures
_____	$_____

UNIT PRICE BASE BID ITEMS

Unit Bid Item No.	Item Description	Unit of Measure	Unit Price – Words and (Figures)	Quantity	Amount
1.	Load, Haul, and Dispose of contaminated soils per Soil Management Plan	Tons	_____ _____Dollars and _____Cents ($_____)	200	$_____

BASE BID ALLOWANCES

Allowance Item No.	Item Description	Unit of Measure	Unit Price – Words and (Figures)	Quantity	Amount
1.	Artwork Coordination	Lump sum	Ten Thousand Dollars and Zero Cents ($_____10,000_____)	1	$ 10,000

*Prior to invoicing for allowances, backup documentation must be submitted indicating actual cost of allowance item.

TOTAL BASE BID PRICE

FOR PURPOSES OF BID COMPARISON, TOTAL BASE BID PRICE INCLUDES: LUMP SUM BASE BID, UNIT PRICE BID ITEM 1, AND ALLOWANCE ITEM 1.

$ _____ (Amount in Figures)

$ _____ (Amount in Words)

ALTERNATE BID ITEMS

Alt. Bid Item No.	Item Description	Unit of Measure	Unit Price – Words and (Figures)
1.	**Credit** for changing floor color PC-2 to PC-1 and elimination of embedded metal bar (for separating colors).	Lump Sum	_____ Dollars and _____Cents ($_____)

Alt. Bid Item No.	Item Description	Unit of Measure	Unit Price – Words and (Figures)
2.	Cost to change first 3 courses of brick to precast to match sills and header.	Lump Sum	_____ Dollars and _____Cents ($_____)

Alt. Bid Item No.	Item Description	Unit of Measure	Unit Price – Words and (Figures)
3.	Cost for Furniture C-1, C-2, C-3, T-1, and T-2.	Lump Sum	_____ Dollars and _____Cents ($_____)

BID FORM SIGNATURE(S)

The Corporate Seal of

_____

(Bidder – Please print the full name of your Proprietorship, Partnership, or Corporation)

Was hereunto affixed in the presence of:

_____

(Authorized Signee) (Title) (Date)

(Seal)

_____

(Notary Public Signature and Seal) (Date)

If the Bid is a joint venture of partnership, add additional forms of execution for each member of the joint venture in the appropriate form of forms as above.

*****END OF SECTION*****

DIVISION 01

SECTION 01 10 00 – SUMMARY

PART 1 – GENERAL

1.1 SUMMARY

A. Section Includes:
   1. Project information
   2. Work covered by Contract Documents
   3. Contracts
   4. Contract Schedule
   5. Access to Project Site
   6. Work Restrictions
   7. Use of Premises
   8. Health and Safety
   9. Transportation and Handling
   10. Cutting and patching

1.2 SUBMITTALS REQUIRED

A. N/A

1.3 REFERENCES

Attachment A: Drawings - Dated: 4-9-24

Attachment B: Specifications – Dated: 4-9-24

Attachment C: Bid Form

Attachment D: Construction Soil Management Plan (Dated:) To be Provided

1.4 PROJECT INFORMATION

A. Project Identification: Pawtucket Passenger Facilities Building

B. Project Code: PCFBLD

C. Project Location: 300 Pine Street, Pawtucket, RI 02860

D. Owner: Rhode Island Public Transit Authority
   1. Owner's Representative: Mr. Matthew Quider, Project Management, RIPTA
   2. Owner's Address: 705 Elmwood Avenue, Providence, RI 02907
   3. Owner's Telephone: 401-784-9500 ext. 1254

E. Architect: BL Companies
   1. Architect's Representative: Christen M. Robbins
   2. Architect's Designee Address: 2346 Post Road Suite 100, Warwick, RI 02886

3. Architect's Representative Telephone: 401-593-2036

F. Owner's Designee: N/A
   4. Owner's Designee Representative: N/A
   5. Owner's Designee Address: N/A
   6. Owner's Designee Representative Telephone: N/A

1.5 WORK COVERED BY CONTRACT DOCUMENTS

A. The work of the project is defined by the Contract Documents and consists of the construction of a passenger facilities building, all utilities connections, handling and proper disposal of any contaminated soils, stormwater control procedures, all permits, and oversight of construction.

1.6 TYPE OF CONTRACT

A. Project will be constructed under a single prime contract utilizing AIA documents.

1.7 CONTRACT SCHEDULE

A. The Contractors proposal schedule durations and/or dates will be the outline for the contract schedule produced by the Contractor and approved by the Owner. The Contractor may be requested by the owner to include further breakdown of tasks and durations for the contract schedule.

B. The contract schedule will establish dates and/or durations for the following:
   1. Issuing of Contract
   2. Submittal Submission
   3. Submittal Approval
   4. Mobilization
   5. Major milestones, tasks, shutdowns, cutovers, and other pertinent information.
   6. Commissioning and Training
   7. Demobilization
   8. Substantial Completion
   9. Punch List
   10. Completion of Project

C. See section *01 31 00 - Project Management and Coordination* for further project schedule requirements.

1.8 CONTRACTOR'S DUTIES

A. The Contractor is responsible for all personnel involved in the work, including those of his direct employ, his sub-contractors and suppliers of materials and equipment and/or labor. The Technical Specifications have been divided for convenience only to cover the scope of

work, and where reference to a particular contractor is noted, it is for convenience only. The Owner and Architect only recognize one Contractor as party to this Contract.

B. As it is impractical to enumerate every piece of equipment, device and/or accessory required for proper operation of the indicated systems specified within their respective Sections or Divisions of the Project Manual; it is intended that all materials, systems, and/or equipment, required to insure proper operation of the equipment, device, and/or accessory, be provided as a part of the Work of this Project so the specified work or system functions, and/or performs as required by the specification. To infer the intent is otherwise, is to render the specified work or system less than required.

C. Except as specifically noted, provide and pay for:
   1. Labor, materials, and equipment.
   2. Tools, construction equipment and machinery.
   3. Water, heat and utilities required for construction.
   4. Other facilities and services necessary for proper execution and completion of the Work.

D. Secure and pay for, as necessary for proper execution and completion of the Work, and as applicable at time of receipt of Bids:
   1. Government fees.
   2. Licenses.

E. Give required notices for operations which may disturb the functions of adjacent facilities.

F. Comply with codes, ordinances, rules, regulations, orders and other legal requirements of public authorities which bear on the performance of the Work.

G. Promptly submit written notice, within Two business days of discovery, to the Architect of observed variance of Contract Documents from legal requirements.

H. Lay out all work and be responsible for all lines, elevations, measurements of the building, utilities and site work executed under the Contract. Verify the figures shown before laying out the Work and be responsible for any error resulting from failure to do so. Employ a competent registered engineer or registered land surveyor, approved by the Architect and Owner, for establishing all lines, levels and dimensions, and place at the disposal of the Architect, as required for checking purposes.

I. Enforce strict discipline and good order among employees. Do not employ persons not skilled in assigned task.

J. Notify all trades, sub-contractors and suppliers of all designated alternatives and be responsible for their coordination.

1.9 ACCESS TO PROJECT SITE AND CONTRACTORS USE OF PREMISES

A. General: Contractor shall have use of premises within contract limits, also referred to as the Limit of Disturbance, as shown on the Drawings for construction operations. Coordinate activities per the requirements of the phasing plan in the Drawings. Contractor's use of premises is limited by the Owner's right to perform work or to retain other contractors on portions of Project.

B. Use of surrounding areas: Limit use of the surrounding area outside the Limits of Disturbance, for Work in areas shown on Drawings. Do not disturb areas beyond which the Work is indicated. The area, outside of the Limits of Disturbance, is available during construction after coordination and approval by Owner. Storage of materials, equipment, and vehicles shall be within the Limit of Disturbance and shall be for use on the project where stored.

C. Driveways, Walkways and Entrances: Keep driveways, sidewalks, entrances, and exits around the project site clear and available to Owner, Owner's employees, general public and emergency vehicles at all times. Do not use these areas for parking or storage of materials. Coordinate temporary blockage of these areas with Owner.

D. Confine operations at site to areas permitted by:
   1. Law.
   2. Ordinances.
   3. Permits.
   4. Contract Documents.

E. Do not unreasonably encumber the site with materials and equipment.

F. Do not load structure with weight that will endanger structure.

G. Assume full responsibility for protection and safekeeping of products stored on the premises.

H. Move any stored products, which interfere with operations of Owner or other Contractor.

I. Obtain and pay for use of additional storage or work areas needed for operations.

J. Limit use of site for work and storage within confines of the Project Limit Line.

1.10 WORK RESTRICTIONS

A. Work Restrictions, General:
   1. Comply with restrictions on construction operations.

2. Comply with limitations on use of public streets and with other requirements of authorities having jurisdiction.
3. On-Site Work Hours: Limit work to normal business working hours of 7:00 a.m. to 4:30 p.m., Monday through Friday, unless otherwise indicated. If work is required outside of the listed hours, the Contractor should coordinate with the Owner 72 hours in advance.
4. City Holidays and Weekends: If work is required, the Contractor should coordinate with the Owner 72 hours in advanced.
5. Allow emergency vehicles access to all areas of the site and pass unimpeded at all times.

B. Existing Utility Interruptions: Do not interrupt utilities serving facilities occupied by Owner or others unless permitted under the following conditions and then only after providing temporary utility services according to requirements indicated:
   1. Notify Owner not less than five days in advance of proposed utility interruptions.
   2. Obtain Owner's written permission before proceeding with utility interruptions.

C. Use of tobacco, alcohol, electronic vapes, controlled substances, and illicit drugs are prohibited on project site and surrounding areas. Anyone found with alcohol, controlled substances or illicit drugs on their person, or in their vehicle, on site or in the surrounding areas will be removed from site. Work will be suspended at the Contractors expense until a meeting can be scheduled between Owner and Contractor. At this time, the Owner reserves the right to terminate any and all contracts with Contractor.

D. Employee Identification: Provide identification tags for Contractor personnel working on Project site. Require personnel to always use identification tags. Personnel shall have their companies name or logo on the outmost piece of clothing or hard hat. Personnel shall not wear any garment showing the name of a company other than the one they are employed.

1.11 HEALTH AND SAFETY PRECAUTIONS

A. OSHA:
   1. These construction documents, all phases of construction, and the Contractor and his sub-contractors are to be governed, at all times, by the applicable portions of the Federal Laws, including but not limited to, the latest amendments of the following:
      a. Williams-Steiger Occupational Safety and Health Act of 1970, Public Law 91-956;
      b. Part 1910 - Occupational Safety and Health Standards, Title 29, Code of Federal Regulations, as amended to date;
      c. Part 1926 - Safety and Health Regulations for Construction, Title 29, Code of Federal Regulations, as amended to date.

B. Dig Safe:
   1. All excavations performed for this project shall be performed in accordance with Rhode Island State law.

2. Any Contractor or subcontractor responsible for excavating shall notify Dig Safe of the proposed excavation or discharge at least seventy-two (72) hours, excluding Saturdays, Sundays, and holidays, but not more than thirty (30) days before commencing the excavation or discharge of explosives. Actual excavation must thereupon commence within thirty (30) days. Each public utility shall, upon receipt of each notice of excavation, mark within seventy-two (72) hours or, where applicable re-mark within forty-eight (48) hours, the location of all underground facilities.

C. Emergencies:
   1. Should tornado, hurricane, gale or heavy wind warnings be issued, take precautions to minimize the danger to persons, to the work, and to the adjacent property. Damage caused to any part of the work shall be rectified or replaced to the complete satisfaction of the Architect and Owner and at no expense to the Owner. Injury to personnel or damage to adjacent property because of the work shall be the complete responsibility of the Contractor, and accepts exclusive responsibility for same.

D. Loading:
   1. Do not load any part of the existing work involved in this Contract, during construction, with a load greater than it is calculated to carry with safety. Should any accidents or damage occur through any violation of this requirement, the Contractor shall be held responsible under his Contract and Bond. When, in the opinion of the Architect, portions of the existing areas appear to be overloaded, it shall be the Contractor's responsibility to prove otherwise, or the Contractor shall follow the instructions of the Architect in connection with reduction of the loads.

   2. Contractor to review existing site conditions and survey to determine location of underground utility systems and structures. Protect systems from damage. Repair, replace any existing to remain systems, unless noted otherwise.

1.12 TRANSPORTATION AND HANDLING

A. Transport all materials and equipment on legally approved conveyances as required or recommended by the respective manufacturer or supplier. Obtain permits as required.

B. Receive and handle all materials and equipment, at the project site, by conveyances or methods as recommended by the respective manufacturer or supplier.

C. Coordinate delivery of equipment and materials when two or more trades, contractors or suppliers are involved.

D. Remove from the site any material or item of equipment damaged during the transportation or handling process, and immediately replace at no additional cost to the Owner.

1.13 STORAGE AND PROTECTION

A. Store all materials and equipment as recommended by the respective manufacturer or supplier, including the following minimum requirements.

B. Upon receipt of such materials and equipment, check, distribute, store and safeguard in a clean, dry, ventilated location.

C. Elevate off the ground, items which can be stored in exterior locations, and completely cover with approved tarpaulins. Protect against the elements at all times.

D. Maintain all storage areas in a clean and orderly condition at all times.

E. Immediately replace any material or item of equipment damaged, due to inadequate storage protection, at no additional cost to the Owner.

1.14 CUTTING AND PATCHING

A. Execute cutting, including excavating, fitting or patching work required to:
   1. Make several parts fit properly.
   2. Uncover work to provide for installation of ill-timed work.
   3. Remove and replace defective work.
   4. Remove and replace work not conforming to the Contract Documents.
   5. Remove samples of installed work, as specified, for testing.
   6. Install specified work in existing construction.
   7. In addition to the Contract requirements, upon written instructions from Architect, uncover work to provide for Architect's observation of covered work, as required by General Conditions.
   8. Remove samples of installed materials for testing; as required by the General Conditions.

B. Do not endanger any work by cutting or altering work, or any part of it.

C. Do not cut or alter work of another Contractor without written permission of the Architect.

D. Prior to cutting which affects structural safety of Project, or work of another Contractor, submit written notice to Architect requesting consent to proceed with cutting.

E. Prior to cutting and patching, done on instruction of the Architect, submit written cost estimate.

F. Inspect existing conditions of work, including existing underground structures and elements subject to movement or damage during:
   1. Cutting and patching.

2. Excavating and backfilling.

G. After uncovering work, inspect conditions affecting installation of new products.

H. Preparation: (prior to cutting)
   1. Provide shoring, bracing and support as required to maintain structural integrity of the Project.
   2. Provide appropriate protection to fully protect other portions of the Project from dust, fumes, humidity, etc.
   3. Provide protection from the elements.

I. Performance: Perform all work of fitting, adjustment, cutting, patching, finishing, and restoration to perfectly match the quality as specified throughout these specifications by trade persons skilled in the work being performed.

PART 2 - PRODUCTS (Not Used)

PART 3 - EXECUTION (Not Used)

*****END OF SECTION*****

SECTION 01 21 00 – ALLOWANCES

PART 1 – GENERAL
1.1 SUMMARY

A. Section includes administrative and procedural requirements governing allowances.
   1. Certain items are specified in the Contract Documents by allowances. Allowances have been established in lieu of additional requirements and to defer selection of actual materials, equipment, or services to a later date when direction will be provided to Contractor. If necessary, additional requirements will be issued by Change Order.

B. Types of allowances include the following:
   1. Lump-sum allowances.
   2. Unit-cost allowances.
   3. Quantity allowances.
   4. Contingency allowances.
   5. Testing and inspecting allowances.

C. At the earliest practical date after award of the Contract, advise Architect of the date when final selection and purchase of each product or system described by an allowance must be completed to avoid delaying the Work. At Architect's request, obtain detailed proposals for each allowance for use in making final selections. Include recommendations that are relevant to performing the Work.

D. Unit Price cost allowances shall have the Contractors overhead and profit, labor, materials, and any other associated expenses included in the per unit price.

1.2 SUBMITTALS REQUIRED

A. Coordinate and process submittals for allowance items in same manner as for other portions of the Work. Include all materials and equipment installed under the allowance.

B. Submit detailed proposals for purchase of products or systems included in allowances, in the form specified for Change Orders. All costs for a complete installation shall be included in the proposal.

C. Submit invoices or delivery slips to show actual quantities of materials delivered to the site for use in fulfillment of each allowance.

D. Submit time sheets and other documentation to show labor time and cost for installation of allowance items that include installation as part of the allowance.

1.3 REFERENCES

A. Division 01 Section "Unit Prices" for procedures for using unit prices.

B. Division 01 Section "Quality Requirements" for procedures governing the Work performed as an allowance.

C. Division 01 Section "Submittal Procedures" for procedures governing the submittals for Allowances.

1.4 COORDINATION

A. Coordinate allowance items with other portions of the Work. Furnish templates as required to coordinate installation.

B. Notify Owner, or Owner's Designee, at least 48-hours prior to the time at which necessary measurements must be taken to verify quantity. Notification must be in advance of obscuring pay item. Do not proceed until such measurements have been taken in the presence of the Owner or Owner's Designee.

1.5 CONTINGENCY ALLOWANCE

A. Use the contingency allowance only as directed by Architect for Owner's purposes and only by Change Orders that indicate amounts to be charged to the allowance.

B. Contractor's overhead, profit, and related costs for products and equipment ordered by Owner under the contingency allowance are included in the allowance and are not part of the Contract Sum. These costs include delivery, installation, insurance, equipment rental, and similar costs.

C. If requested, prepare explanation and documentation to substantiate distribution of overhead costs and other margins claimed.

D. Change Orders authorizing use of funds from the contingency allowance will include Contractor's related costs and overhead and profit margins.

1.6 ADJUSTMENT OF ALLOWANCES

A. At Project closeout, credit unused amounts remaining in the contingency allowance to Owner by Change Order.

B. To adjust allowance amounts, prepare a Change Order proposal based on the difference between purchase amount and the allowance, multiplied by final measurement of work-in-place where applicable. If applicable, include reasonable allowances for cutting losses, tolerances, mixing wastes, normal product imperfections, and similar margins.

C. Owner reserves the right to establish the quantity of work-in-place by independent quantity survey, measure, or count.

D. Transfer of funds between allowances require a change order signed by Architect or Owner.

PART 2 - PRODUCTS (Not Used)

PART 3 - EXECUTION

3.1 EXAMINATION

A. Examine products covered by an allowance promptly on delivery for damage or defects. Return damaged or defective products to manufacturer for replacement.

3.2 PREPARATION

A. Coordinate materials and their installation for each allowance with related materials and installations to ensure that each allowance item is completely integrated and interfaced with related work.

3.3 SCHEDULE OF ALLOWANCES

A. See Bid Form for list of Allowances.

*****END OF SECTION*****

SECTION 01 22 00 – UNIT PRICES

PART 1 – GENERAL

1.1 SUMMARY

A. Section includes administrative and procedural requirements for unit prices.

1.2 SUBMITTALS REQUIRED

A. Coordinate and process submittals for unit price items in same manner as for other portions of the Work. Include all materials and equipment installed under the unit price.

B. Submit invoices or delivery slips to show actual quantities of materials delivered to the site for use in fulfillment of each allowance.

C. Submit documentation of installed unit price items. Include pictures, inspection reports, marked plans, or any other documentation to probably document the installed quantity.

1.3 REFERENCES

A. Division 01 Section "Allowances" for procedures for using unit price allowance.

B. Division 01 Section "Quality Requirements" for procedures governing the Work performed as an allowance.

C. Division 01 Section "Submittal Procedures" for procedures governing the submittals for Allowances.

1.4 COORDINATION

A. Coordinate unit price items with other portions of the Work.

B. Notify Owner, or Owner’s Designee, at least 48-hours prior to the time at which necessary measurements must be taken to verify quantity. Notification must be in advance of obscuring pay item. Do not proceed until such measurements have been taken in the presence of the Owner or Owner’s Designee.

1.5 ADJUSTMENT OF UNIT PRICE ITEMS

A. At Project closeout, credit unused amounts of unit price items to the Owner by Change Order.

B. Transfer of funds between unit prices require a change order.

C. To adjust or exceed unit price quantities, prepare a Change Order to be signed by Architect or Owner. If funds are moved from one unit price item to another, clearly document the change of quantities in Change order.

D. Owner reserves the right to establish the quantity of work-in-place by independent quantity survey, measure, or count.

1.6 PROCEDURES

A. Unit prices include all necessary material, plus cost for delivery, installation, insurance, applicable taxes, bonds, overhead, and profit.

B. Owner reserves the right to reject Contractor's measurement of work-in-place that involves use of established unit prices and to have this work measured, at Owner's expense, by an independent surveyor acceptable to Contractor.

PART 2 - PRODUCTS (Not Used)

PART 3 - EXECUTION

3.1 PREPARATION

A. Coordinate materials and their installation for each unit price with related materials and ensure that each unit price item is completely integrated and interfaced with related work.

3.2 SCHEDULE OF UNIT PRICE ITEMS

A. See Bid Form for list of unit price items.

*****END OF SECTION*****

SECTION 01 25 00 – SUBSTITUTION PROCEDURES

PART 1 – GENERAL

1.1 SUMMARY

A. Substitutions: Changes in products, materials, equipment, and methods of construction from those required by the Contract Documents and proposed by Contractor.

B. Requests for Approved Equals and Substitutions must be made and submitted in writing to RIPTA's contracts manager during the request for approved equals and questions period of the RFP.

C. Requests for Approved Equals and Substitutions must be submitted by the Prime Contractors only. Potential Subcontractors must coordinate with Prime Contractors for submission of any products they wish to submit.

D. Section includes administrative and procedural requirements for requesting *substitutions for cause* after the RFP request for approved equals and questions period. These changes proposed by Contractor are required due to changed Project conditions, such as unavailability of product, regulatory changes, or unavailability of required warranty terms.

E. Requesting substitutions for cause must be made within 3 weeks of contract issuance. Within 2 weeks of contract issuance all submittals are required to be submitted and product availability should be known at this time.

F. Substitutions for Convenience are proposed changes by Contractor that are not required in order to meet other Project requirements but may offer advantages to Contractor, Owner, Project Budget, or Project Schedule. Substitutions for convenience must be proposed during the RFP request for approved equals and questions period.

1.2 SUBMITTALS REQUIRED

A. Substitutions for Cause:
   1. Submit one copy of each request for consideration. Identify product, fabrication method or installation method to be replaced. Include Specification Section number and titles and any applicable Drawing numbers and titles. Use substitution request form acceptable to Owner and Architect.
   2. If substitution is requested due to a product being unavailable, include a letter from the manufacturer (not supplier) , on manufacturer's letterhead, stating the date of receipt of purchase order, the lack of availability, and why the specified product or fabrication or installation cannot be provided intime to meet the project schedule.
   3. Detailed comparison of significant qualities of proposed substitution with those of the Work specified. Include annotated copy of applicable Specification Section. Significant

qualities may include attributes such as performance, weight, size, durability, visual effect, sustainable design characteristics, warranties, and specific features and requirements indicated. Indicate deviations, if any, from the Work specified.

4. Samples, where applicable or requested.
5. Product Data, including drawings and descriptions of products and fabrication and
6. installation procedures.
7. Certificates and qualification data, where applicable or requested.
8. List of similar installations for completed projects with project names and addresses, and names and addresses of architects and owners.
9. Material test reports from a qualified testing agency indicating and interpreting test results for compliance with requirements indicated.
10. If requested substitution will delay the project schedule, submit a detailed comparison of Contractor's construction schedule using proposed substitution with products specified for the Work, including effect on the overall Contract Time.
11. Cost information, including a proposal of change, if any, in the Contract Sum.
12. Contractor's certification that proposed substitution complies with requirements in the Contract Documents except as indicated in substitution request, is compatible with related materials, and is appropriate for applications indicated.
13. Contractor's waiver of rights to additional payment or time that may subsequently become necessary because of failure of proposed substitution to produce indicated results.
14. Submit coordination information, including a list of changes or revisions needed to other parts of the Work and to construction performed by Owner and separate contractors that will be necessary to accommodate proposed substitution.

1.3 REFERENCES

A. Division 01 Section "Product Requirements" for requirements for submitting comparable product submittals for products by listed manufacturers.

B. See RIPTA Procurement's "Request for Approved Equal Form" in the RHODE ISLAND PUBLIC TRANSIT AUTHORITY Request for Proposals. (Typically pg 48)

1.4 APPROVAL

A. Architect and Owner will review and comment on submitted substitution for cause per the submittal review procedure outlined in subsequent sections.

B. Use product specified if Architect does not issue a decision on use of a proposed substitution within time allocated.

1.5 COORDINATION

A. Contractor is responsible for all coordination of Work, construction performed by Owner, and separate contractors that will be necessary to accommodate proposed substitution.

B. Revise or adjust affected work as necessary to integrate work of the approved substitutions.

1.6 PROCEDURES

A. Unit prices include all necessary material, plus cost for delivery, installation, insurance, applicable taxes, bonds, overhead, and profit.

B. Owner reserves the right to reject Contractor's measurement of work-in-place that involves use of established unit prices and to have this work measured, at Owner's expense, by an independent surveyor acceptable to Contractor.

PART 2 - PRODUCTS (Not Used)

PART 3 - EXECUTION (Not Used)

*****END OF SECTION*****

SECTION 01 31 00 - PROJECT MANAGEMENT AND COORDINATION

PART 1 – GENERAL

1.1 SUMMARY

A. Section includes Contractors administrative provisions for coordinating construction operations on Project including, but not limited to, the following:
   1. General coordination procedures.
   2. Construction Management Software requirement
   3. Project meetings.
   4. Contract Schedule
   5. Construction Schedules
   6. Requests for Information (RFIs)
   7. Contract Modifications Procedures- Change Orders
   8. Payment Procedures
   9. Permit application
   10. Daily Reports
   11. Photographs

B. Related Sections:
   1. Section 01 71 13 “Mobilization.”
   2. Section 01 33 00 “Submittals”

1.2 SUBMITTALS

A. Meeting Minutes
B. Schedules
C. Project Directory
D. Schedule of values
E. Pay Applications
F. RFI’s
G. Change Orders
H. Permits
I. Daily Reports

1.3 GENERAL COORDINATION PROCEDURES

A. Contractor to coordinate construction operations included in multiple sections of the Specifications and Drawings to ensure efficient and orderly installation of each part of the Work.

B. Contractor to coordinate with Owner's Personnel or Owner's sub-contractors as required. Include these individuals in the weekly project meetings and distribution of applicable information.

C. Coordinate and sequence Work to limit the duration of disturbance to project site or surrounding project areas.

D. Coordinate Work to limit periods of inactivity after Mobilization.

E. Schedule construction operations in sequence required to obtain the best results where installation of one part of the Work depends on installation of other components, before or after its own installation. Make adequate provisions to accommodate items scheduled for installation at a later date.

F. Coordinate installation of different components to ensure maximum performance and accessibility for required maintenance, service, and repair.

G. Contractor shall coordinate its construction operations with those of other contractors, Owner's personnel, Owner's tenants, Owner's neighbors, Utility companies, AHJ's , Emergency Personnel, Federal Officials, State Officials, and City Officials to ensure efficient and orderly installation of each part of the Work.

H. Contractor, at a minimum, shall hold weekly Foreman meetings with entities working onsite and inclusive of the Architect, Owner and Owner's Designee. Contractor shall coordinate for the appropriate project team members to attend, document meeting with meeting minutes, and distribute an updated Schedule and 3 Week Look Ahead to all members. Location of meeting to be coordinated with Owner.

I. Coordinate construction activities to ensure that operations are carried out with consideration given to conservation of energy, water, and materials. Coordinate use of temporary utilities to minimize waste. Salvage materials and equipment involved in performance of, but not actually incorporated into, the Work. See other Sections for disposition of salvaged materials that are designated as Owner's property.

1.4 CONSTRUCTION MANAGEMENT SOFTWARE REQUIREMENT

A. Contractor to furnish and manage a construction management software for the duration of the project and until final closeout.
B. Construction management software shall be Procore, or an approved equal by the Owner.
C. Contractor shall set up the construction management software within 5 days of project award. Owner, Architect, and Owner's Designee shall be given access within that time.
D. Construction management software shall be used to enable transfer of files to and from the Architect, Owner, Owner's Designee, and Contractor.
E. At a minimum, construction management software shall be utilized for the following:
    a. Submittals

b. RFI's
c. Meeting minutes
d. Photos
e. Safety Documentation
f. Drawings
g. Specifications
h. Directory
i. Daily Reports

F. All project documents in the construction management software shall be incorporated into the closeout documentation and turned over to the Owner. Coordinate with Architect and Owner on specifics for closeout.

1.5 PROJECT MEETINGS

A. Owner views the listed project meetings as a contractual requirement of the Contractor and of equal importance to the physical materials and onsite labor that goes into this Project. Failure to hold any of the Project Meetings will result in any or all of the following:
   1. A deduct change order in the amount of $2,000 per missed meeting.
   2. Notification to the Contractors Bonding Company that the Owner is declaring Contractors in Default.
   3. Part or all of the Project being shut down until the required meeting is held by the Contractor. Contractor will be liable for all costs associated with the shutdown including all cost to accelerate work to maintain the project schedule once resumed.

B. *Project Kick-Off Meeting:* Contractor shall schedule and conduct a Project Kick-Off meeting within 2 weeks of being awarded the Project, at a time convenient to Architect, Owner and Owner's Designee.
   1. Attendees: Authorized representatives of Architect, Owner, Owner's Designee, Contractor, and major Sub-contractors.
   2. Agenda: Introductions and discussion of items of significance that could affect progress, including the following:
      a. Project Schedule
      b. Permitting schedule Risk Review
      c. Phasing Plans
      d. Designation of key personnel and their duties
      e. Communications protocols
      f. Procedures for processing field decisions and Change Orders
      g. Procedures for RFIs
      h. Procedures for testing and inspecting
      i. Procedures for processing Applications for Payment
      j. Distribution of the Contract Documents
      k. Submittal procedures
      l. Review time required for review of submittals and resubmittals
      m. Critical work sequencing and long-lead items
      n. Contractors Submittal Log

o. Contractors Log of Anticipated Tests and Inspections for use during construction
p. Preparation of record documents
q. Use of the premises
r. Work restrictions
s. Working hours
t. Responsibility for temporary facilities and controls
u. Construction waste management and recycling
v. Parking availability
w. Equipment deliveries and priorities
x. Health and safety
y. First aid
z. Security
aa. Progress cleaning

3. Minutes: Contractor shall record and distribute meeting minutes with sign-In sheet, schedules, and other attachments discussed during meeting. Minutes shall be submitted formally for project record.

C. *Pre-Construction Meeting:* Contractor shall schedule and conduct a Pre-Construction Meeting 10 days before Mobilization to review responsibilities and personnel assignments, at a time convenient to Architect, Owner and Owner's Designee.

1. Attendees: Authorized representatives of Architect, Owner, Owner's Designee, Contractor, Contractor's superintendent and foreman, major Sub-Contractors, and other concerned parties shall attend the conference.
   a. Participants at the conference shall be familiar with the project and authorized to conclude matters relating to the Work.
2. Agenda: Discuss items of significance that could affect progress, including the following:
   a. Project Schedule / 3 week look ahead
   b. List of construction activities to be included in schedule.
   c. Verify availability of qualified personnel needed to develop and update schedule.
   d. Phasing and mobilization
   e. Designation of key personnel and their duties.
   f. Lines of communications.
   g. Project directory with email and phone numbers.
   h. Procedures for processing field decisions and Change Orders.
   i. Procedures for RFIs / Review any current RFI's
   j. Procedures for disruptions and shutdowns.
   k. Procedures for testing and inspecting.
   l. Contractors Log of Anticipated Tests and Inspections for use during construction.
   m. Use of the premises.
   n. Work restrictions.
   o. Working hours.
   p. Temporary facilities.
   q. Construction waste management and recycling.
   r. Parking availability and site access.

s. Equipment deliveries and priorities.
t. Health and safety plan and requirements
u. First aid.
v. Security.
w. Progress cleaning.
x. Owner's occupancy requirements.
y. Commissioning activities

3. Minutes: Contractor shall record and distribute meeting minutes with sign-In sheet, schedules, and other attachments discussed during meeting. Minutes shall be submitted formally for project record.

D. *Weekly Progress Meetings* - Contractor shall schedule and conduct weekly meetings and/or conferences at a RIPTA Office or the Project Site.

1. Attendees: Contractor to inform participants, and any additional individuals whose presence is required, of date and time of each meeting. Notify Architect, Owner, Owner's Designee, other Contractors and Sub-contractors of scheduled meeting dates and times. Contractor's attendance is mandatory.
   a. Contractors Attendee at the meeting shall be familiar with the project and authorized to conclude matters relating to the Work.

2. Agenda: Contractor to prepare the meeting agenda. Distribute the agenda to all invited attendees. The meeting agenda should include the following at a minimum:
   a. Review and correct or approve minutes of previous progress meeting.
   b. Health and safety requirements / Issues.
   c. Project Schedule / 3 week Look-Ahead / Delays.
   d. Shut Downs / Cutovers / Major Events
   e. Submittal reviews
   f. Submitted or upcoming RFI's.
   g. Submitted or upcoming Change Orders
   h. Risk mitigation Log
   i. General Discussion Items
3. Minutes: Contractor will record significant discussions and agreements achieved during the meeting. Contractor shall record and distribute meeting minutes with sign-In sheet, schedules, submittal log, RFI log and other attachments discussed during meeting.
   a. Minutes should indicate who is responsible for action items, date action was assigned, date action was complete, and resolution with item marked as closed. Minutes shall be submitted formally for project record.

E. *Weekly Foreman's Meetings* - Contractor shall schedule and conduct weekly meetings onsite for field coordination and scheduling.

1. Attendees: Contractor to require attendance from any individuals whose presence is required, is currently working onsite, or will be working onsite within the next 3 weeks.
   a. Extend invitation to Architect, Owner and Owner's Designee. Their attendance is not mandatory.

2. Agenda: Contractor to prepare the meeting agenda. Distribute the agenda to all invited attendees. The meeting agenda should include the following at a minimum:
   a. Review and correct or approve minutes of previous progress meeting.
   b. Health and safety requirements / Issues.
   c. Review Project Schedule / Produce 3 week Look-Ahead
   d. Scheduled Shutdowns / Cutovers / Major Events / Deliveries / Inspections
   e. Submittals
   f. Submitted or Upcoming RFI's.
   g. Submitted or upcoming Change Orders
   h. Risk Mitigation Log
   i. General Discussion Items (Quality, Work hours, Site Access)

3. Minutes: Contractor will record significant discussions and agreements achieved during the meeting. Contractor shall record and distribute meeting minutes with sign-In sheet, schedules, submittal log, RFI log and other attachments discussed during meeting.
   a. Minutes should indicate who is responsible for action items, date action was assigned, date action was complete, and resolution with item marked as closed.

F. *Project Closeout Conference*: Contractor shall schedule and conduct a project closeout conference to review requirements and responsibilities related to Project Closeout, at a time convenient to Architect, Owner and Owner's Designee, but no later than 15 days prior to the scheduled date of Substantial Completion. (Substantial Completion occurs when the project, or a portion of the project, is fit for its intended use and the Owner can occupy and use the property)

1. Attendees: Authorized representatives of Architect, Owner and Owner's Designee, Commissioning Authority, Contractor and their superintendent, and Sub-Contractors.
2. Agenda: Discuss items of significance that could affect or delay project closeout, including the following:
   a. Preparation of record documents
   b. Procedures required for Substantial Completion, Final Inspection, and Closeout
   c. Submittal of written warranties
   d. Lien waiver requirements
   e. Requirements for preparing operations and maintenance data.
   f. Requirements for delivery of material samples, attic stock, and spare parts
   g. Preparation of Contractor's punch list
   h. Owner's partial occupancy requirements
   i. Procedures for processing Applications for Payment at Substantial Completion and for final payment
   j. Responsibility for removing temporary facilities and controls
3. Minutes: Contractor shall record and distribute meeting minutes with sign-In sheet, schedules, and other attachments discussed during meeting.

G. *Safety Meetings:* At a minimum, The Contractor shall schedule and administer a weekly Safety Meeting, or if requested by the Architect, Owner and Owner's Designee.
   1. Attendees: Superintendent, Contractor's onsite employees, Sub-Contractors including all onsite employees, suppliers, and other entity concerned with current progress or involved in planning, coordination, or performance of future activities shall be represented at these meetings. All participants at the meetings shall be familiar with OSHA regulations relating to the Work.
      a. Extend invitation to Architect, Owner and Owner's Designee. Their attendance is not mandatory.

   2. Agenda: Review topics of significance that could affect safety. Include topics for discussion as appropriate to the phase of the Project. Review present and future concerns, including the following:
      a. Proposed Work activities for that week and/or day.
      b. Current hazards and risks onsite.
      c. Anticipated weather conditions.
      d. Anticipated changes to site conditions.
      e. "Tool Box Talk" with topic that relates to onsite activities.
      f. Near misses or incidents

   3. Contractor shall maintain a sign-In sheet for the meeting and make sheet available upon request of Architect, Owner or Owner's Designee.

H. *Daily Arrival Meeting*: All Contractor employees, visitors, vendors, and sub-contractors to the Project Site shall sign in with the Contractor before entering the property and sign the visitor logbook. Logbook should contain the following for each signee:
   1. Legal Name
   2. Company Name
   3. Phone Number
   4. Time In / Time Out

   Contractor shall maintain the visitor logbook throughout the duration of the Project. The site-specific Health and Safety Plan (HASP) should be available to all visitors and be kept with visitor logbook.

1.6 CONTRACT SCHEDULE

A. The number of days within which, and / or the dates by which have been approved by the Owner and Contractor in the Contract Schedule. The Work is to be completed and ready for Owner occupancy and use as set forth in the Agreement.

B. At a minimum the Contract Schedule will establish dates and/or durations for the following:
   1. Issuing of Contract
   2. Submittal Submission
   3. Submittal Approval

4. Mobilization
5. Major Construction Activities
6. Shutdowns, cutovers, disruptions to Owner
7. Commissioning and Training
8. Demobilization
9. Substantial Completion
10. Punch List
11. Final Completion of Project

1.7 CONTRACTOR'S CONSTRUCTION SCHEDULE

A. Contractor's Construction Schedule: A detailed Gantt-Chart type project schedule shall be developed by the Contractor, and approved by the Owner, after award of contract outlining project activities, phases, milestones, shutdowns, cutovers, or any other pertinent information. Construction Schedule shall include the dates agreed upon in the Contract Schedule.

B. The Contractor shall maintain the Construction Schedule from award of contract through final closeout and make the schedule readily available for the Owner and project team. Post copies in Project meeting rooms and temporary field offices.

C. Construction Schedule should be updated weekly to show actual construction progress, formally submitted as a submittal weekly, and be available for discussion during weekly project meetings. The submitted Construction Schedules will be subject to approval by the Architect, Owner and Owner's Designee.

D. In addition to the Construction Schedule a highly detailed 3 Week Lookahead shall be submitted weekly outlining upcoming tasks, inspections, phase changes, shutdowns, cutovers, and anything required of the Owner for the listed activities to stay on schedule. The 3 Week Lookahead shall be utilized in the Foreman's meeting for coordination purposes. Secure time commitments for performing critical elements of the Work from entities involved.

E. Owner views the Construction Schedule with weekly updates as a contractual requirement of the Contractor and of equal importance to the physical materials and onsite labor that goes into this Project. Failure to submit an updated weekly schedule will result in any or all of the following:
   1. A deduct change order in the amount of $1,000 per week.
   2. A deduct change order for the cost of the Owner or Architect to procure professional scheduling services or perform the scheduling in-house.
   3. Notification to the Contractors Bonding Company that the Owner is declaring Contractors in default.

4. Part or all of the Project being shut down until an updated schedule is submitted. Contractor will be liable for all costs associated with the shutdown including all cost to accelerate work to maintain the project schedule once resumed.

F. Schedule shall include the following information:
   1. Project Name, Run Date, Revision Number
   2. Duration (Working Days)
   3. Duration (Calendar Days)
   4. Activity Start and Finish dates.
   5. Actual Activity start and Finish dates.
   6. Activity Predecessors and Successors
   7. Clearly defined Critical Path

G. The schedule shall display activities from contract issuance through project closeout.

H. Define activities so no activity is longer than 20 days, unless specifically allowed by Architect, Owner and Owner's Designee.

I. Include a separate activity for each portion of the Work performed by Owner.

J. Include separate procurement process activities for each long lead item, major item, or critical path item that requires more than 60 days from Submittal to Delivery. Procurement process activities include submittal, approval, purchase, fabrication, and delivery.

K. Schedule shall clearly identify the Critical Path which is the longest connected chain of interdependent activities through the network schedule that establishes the minimum overall Project duration and contains no float.

L. Coordinate and sequence Work to limit the duration of disturbance to project site.

M. Coordinate Work to limit inactivity after Mobilization.

N. When revisions are made, distribute updated schedules to the same parties and post in the same locations. Delete parties from distribution when they have completed their assigned portion of the Work and are no longer involved in performance of construction activities.

O. Contract completion date shall not be changed by submission of a schedule with a modified completion date, unless specifically authorized by Change Order.

P. Contractor must immediately notify the Architect, Owner and Owner's Designee in writing about any potential delays. The time from the start of a delay to the time of written notification to the Architect, Owner and Owner's Designee cannot be claimed for reimbursement or used to calculate a modified completion date.

Q. Approved Additional Time and Delays shall be defined by a separate activity in the Construction Schedule. Activity name shall clearly identify the Change Order or reason for additional time in the Construction Schedule.

R. When the Work is 7 calendar days or more behind the current approved schedule, submit a separate recovery schedule indicating means by which Contractor intends to regain compliance with the schedule.

S. The Contractor shall not sequester shared float through such strategies as extending activity duration estimates to consume available float, using preferential logic, or using extensive crew/resource sequencing, etc. Since float time within the schedule is jointly owned, no time extensions will be granted nor delay damages paid until a delay occurs which extends the work beyond the contract completion date. Since float time within the construction schedule is jointly owned, it is acknowledged that Owner caused delays on the Project may be offset by Owner caused timesaving (i.e., critical path submittals returned in less time than allowed by the contract, approval of substitution requests and credit changes which result in a savings of time to the Contractor, etc.). In such an event, the Contractor shall not be entitled to receive a time extension or delay damages until all Owner caused timesaving are exceeded and the contract completion date is also exceeded.

1.8 REQUESTS FOR INFORMATION (RFIs)

A. General: Immediately upon discovery of the need for additional information or interpretation of the Contract Documents, Contractor shall prepare and electronically submit an RFI in the form specified or agreed upon.

B. Architect will return RFI's submitted to Architect or Owner by other entities controlled by Contractor with no response.

C. Coordinate and submit RFI's in a prompt manner as to avoid delays in Contractor's work or work of Sub-Contractors.

D. Content of the RFI: Include a detailed, legible description of the request needing additional information or interpretation, and the following:
   1. Project name
   2. Project number
   3. Date Submitted
   4. Name of Contractor, Owner, Architect, and Engineer.
   5. RFI number, numbered sequentially.
   6. RFI Title (Title should clearly represent the topic of the RFI
   7. RFI Request (Request should clearly identify the additional information required).
   8. Specification Section number, title, and related paragraphs as appropriate.
   9. Drawing number and detail references, as appropriate.
   10. Field dimensions and condition, as appropriate.

11. Contractor's suggested resolution. If Contractor's suggested resolution impacts the Contract Time or the Contract Sum, Contractor shall state impact in the RFI.
12. Contractor's signature
13. Attach sketches, descriptions, measurements, photos, Product Data, Shop Drawings, coordination drawings, and other information necessary to fully describe items needing interpretation.
14. In attachments Include dimensions, thicknesses, structural grid references, and details of affected materials, assemblies, and attachments on attached sketches.

E. Architect's Action: Architect will review each RFI, determine action required, and respond. Allow seven (7) working days for Architect's response for each RFI. RFIs received by Architect after 1:00 p.m. will be considered as received the following working day.

F. Architect's action may include a request for additional information, in which case Architect's time for response will date from time of receipt of additional information.

G. The following Contractor-generated RFI's will be returned without action:
   1. Requests for approval of submittals.
   2. Requests for approval of substitutions.
   3. Requests for approval of Contractor's means and methods.
   4. Requests for coordination information already indicated in the Contract Documents.
   5. Requests for adjustments in the Contract Time or the Contract Sum.
   6. Requests for interpretation of Architect's actions on submittals.
   7. Incomplete RFI's or inaccurately prepared RFI's

H. If Contractor believes the RFI response warrants change in the Contract Time or the Contract Sum, notify Architect, Owner and Owner's Designee in writing within 2 days of receipt of the RFI response, Or prior to expenditure of additional funds requiring reimbursement.

I. RFI Log: When RFI's are submitted to the Architect, Owner and Owner's Designee, prepare, maintain, and submit a printed log of RFI's organized by the RFI number. Submit log weekly for review. Log shall include the following:
   1. Project name.
   2. Name and address of Contractor.
   3. Name and address of Owner and Arcitect.
   4. RFI number including RFI's that were returned without action or withdrawn.
   5. RFI Status (Open, Closed, Void)
   6. RFI Titles
   7. Date the RFI was submitted.
   8. Date Architect, Owner or Owner's Designee response was received.
   9. Days RFI response is overdue.
   10. Cost impact (Time or Contract sum)

J. On receipt of Architect, Owner, or Owner's Designee's action, update the RFI log and immediately distribute the RFI response to affected parties. Review response and notify Architect, Owner or its Designee in writing within 2 days if Contractor disagrees with response.

1.9 CHANGE ORDERS

A. Minor Changes in the work

1. Architect will issue supplemental instructions authorizing minor changes in the Work, not involving adjustment to the Contract Sum or the Contract Time, on AIA Document G710, "Architect's Supplemental Instructions."

B. Proposal Request

1. *Owner-Initiated Proposal Requests*: Architect will issue a detailed description of proposed changes in the Work that may require adjustment to the Contract Sum or the Contract Time. If necessary, the description will include supplemental or revised Drawings and Specifications.
   a. Proposal Requests issued by Architect are not instructions either to stop work in progress or to execute the proposed change.
   b. Within time specified in Proposal Request or 15 days, when not otherwise specified, after receipt of Proposal Request, submit a quotation estimating cost adjustments to the Contract Sum and the Contract Time necessary to execute the change. Use forms acceptable to Architect.
   c. Include a list of quantities of products required or eliminated and unit costs, with total amount of purchases and credits to be made. If requested, furnish survey data to substantiate quantities.
   d. Indicate applicable taxes, delivery charges, equipment rental, and amounts of trade discounts.
   e. Include costs of labor and supervision directly attributable to the change.
   f. Include an updated Contractor's Construction Schedule that indicates the effect of the change, including, but not limited to, changes in activity duration, start and finish times, and activity relationship. (Use available total float before requesting an extension of the Contract Time)

2. *Contractor-Initiated Proposals*: If latent or changed conditions require modifications to the Contract, Contractor may initiate a claim by submitting a request for a change to Architect.
   a. Include a statement outlining reasons for the change and the effect of the change on the Work. Provide a complete description of the proposed change. Indicate the effect of the proposed change on the Contract Sum and the Contract Time. Use form acceptable to Architect, Owner and Owner's Designee.
   b. Include a list of quantities of products required or eliminated and unit costs, with total amount of purchases and credits to be made. If requested, furnish survey data to substantiate quantities.

c. Indicate applicable taxes, delivery charges, equipment rental, and amounts of trade discounts.
d. Include costs of labor and supervision directly attributable to the change.
e. Include an updated Contractor's construction schedule that indicates the effect of the change, including, but not limited to, changes in activity duration, start and finish times, and activity relationship. Use available total float before requesting an extension of the Contract Time.
f. Comply with requirements in Division 01 Section "Substitution Procedures" if the proposed change requires substitution of one product or system for product or system specified.

3. Change Order Procedures
   a. On Architect, Owner or Owner’s Designee approval of a Changes Proposal Request, Contractor will issue a Change Order for signatures of Owner and Contractor on AIA Document G701.

4. Construction Change Directive
   a. Architect may issue a construction change directive on AIA Document G714. Construction Change Directive instructs Contractor to proceed with a change in the Work, for subsequent inclusion in a Change Order.
   b. Construction Change Directive contains a complete description of change in the Work. It also designates method to be followed to determine change in the Contract Sum or the Contract Time.
   c. Maintain detailed records on a time and material basis of work required by the Construction Change Directive.
   d. After completion of change, submit an itemized account and supporting data necessary to substantiate cost and time adjustments to the Contract.

1.10 PAYMENT PROCEDURES

A. The terms for each progress payment is indicated in the Agreement between Owner and Contractor. The period of construction work covered by each Application for Payment is also indicated in the Agreement.

B. Utilizing AIA G703, Submit the schedule of values to the Architect for approval at the earliest possible date, but no later than seven (7) days before the date scheduled for submittal of initial Applications for Payment.
   1. On the schedule of values, provide a breakdown of the Contract Sum in enough detail to facilitate continued evaluation of Applications for Payment and progress reports. Provide multiple line items for principal subcontract amounts in excess of five percent of the Contract Sum.
   2. Round amounts to nearest whole dollar; total shall equal the Contract Sum
   3. Provide a separate line item in the schedule of values for each part of the Work where Applications for Payment may include materials or equipment purchased or fabricated

and stored, but not yet installed. Differentiate between items stored on-site and items stored off-site. If required, include evidence of insurance.

4. Each item in the schedule of values and Applications for Payment shall Include total cost and proportionate share of general overhead and profit for each item.
5. Temporary facilities and other major cost items that are not direct cost of actual work-in-place may be shown either as separate line items in the schedule of values or distributed as general overhead expense, at Contractor's option.
6. Update and resubmit the schedule of values before the next Applications for Payment when Change Orders or Construction Change Directives result in a change in the Contract Sum.

C. Utilizing AIA G702 , Submit applications for payments to the Architect for approval by the 25th of each month. The period covered by each Application for Payment is one month, ending on the last day of the month.
   1. Submit a draft copy of Application for Payment seven (7) days prior to due date for review by Architect, Owner and Owner’s Designee. Complete every entry on form.
   2. Include amounts for work completed following previous Application for Payment, whether or not payment has been received. Include only amounts for work completed at time of Application for Payment.
   3. Once draft copy is approved, notarize and execute by a person authorized to sign legal documents on behalf of Contractor. Architect will return incomplete applications without action.
   4. Each Application for Payment following the initial Application for Payment shall be consistent with the previous approved applications and payments as certified by Architect and paid for by Owner
   5. Signed and notarized Pay Applications may be transmitted digitally.
   6. With each Application for Payment, submit waivers of mechanic's lien from entities lawfully entitled to file a mechanic's lien arising out of the Contract and related to the Work covered by the payment.
   7. With the Initial Application for Payment, the following administrative actions and submittals must precede or coincide with the submittal of the first Application for Payment.
      a. Submit Performance and Payment Bonds
      b. Certificates of insurance and insurance policies.
      c. Copies of building permits.

D. Final Payment Application: After completing Project Closeout Requirements, submit final Application for Payment with releases and supporting documentation not previously submitted and accepted, including, but not limited, to the following:
   1. Evidence of completion of Project closeout requirements as requested by Architect, Owner and Owner’s Designee
   2. AIA Document G706, "Contractor's Affidavit of Payment of Debts and Claims."
   3. AIA Document G706A, "Contractor's Affidavit of Release of Liens."
   4. AIA Document G707, "Consent of Surety to Final Payment."

5. Evidence that any claims have been settled as requested by Architect, Owner or Owner's Designee.
6. Final meter readings for utilities, a measured record of stored fuel, and similar data as of date of Substantial Completion or when Owner took possession of and assumed responsibility for corresponding elements of the Work.
7. Final liquidated damages settlement statement.

1.11 PERMITS

A. Application for permits
   1. Contractor is responsible for all indirect costs associated with applying for permits.
   2. RIPTA will directly pay for the general building permit once Contractor applies for permit. Contractor to notify Owner once payment is required.
   3. Contractor and Subcontractors must list the Owner on the permit with the following contact information:
      Rhode Island Public Transit Authority
      Matthew Quider
      705 Elmwood Ave, Providence, RI 02907
      Phone: 401-784-9500
      Email: mquider@Ripta.com
   4. Contractor must apply for permits no later than 5 business days from receiving fully executed contract.

B. Submittal of Permits
   1. Contractor must submit copies of all permits following the submittal submission procedures.
   2. Permits must be legible and clearly indicate date issued/signed by building officials.

C. Coordination of inspections
   1. Contractor is responsible for coordinating all their own inspections.
   2. Contractor is responsible for closeout of all their Permits.

D. Notification of inspections to Architect, Owner and Owner's Designee.
   1. Contractor and Subcontractors must notify the Architect, Owner and Owner's Designee 24 hours prior to an inspection.
   2. Owner and Architect must be given the opportunity to attend all inspections.

E. Failed Inspection
   1. Contractor and Subcontractors shall be responsible for the cost of all rework due to failed inspections without an extension of time.
   2. Contractor is responsible for the cost of re-inspections of failed work.
   3. Contractor is responsible for the costs of additional Engineer and/or Architect site visit for reinspection.

F. Closeout of Permits
   1. Contractor must submit all permit closeout documentation following the submittal submission procedures.
   2. Final fire alarm inspection reports must be submitted for record.

1.12 DAILY REPORTS

A. Contractor to Prepare a daily construction report recording the following information at a minimum concerning events at Project site:
   1. List of subcontractors at Project site.
   2. List of separate contractors at Project site.
   3. Count of personnel at Project site.
   4. Equipment at Project site.
   5. Material deliveries.
   6. High and low temperatures and general weather conditions, including presence of rain or snow.
   7. Accidents or Emergenies
   8. Meetings and significant decisions.
   9. Unusual events (see special reports).
   10. Stoppages, delays, shortages, and losses.
   11. Meter readings and similar recordings.
   12. Orders and requests of authorities having jurisdiction (AHJ).
   13. Change Orders received and implemented.
   14. Construction Change Directives received and implemented.
   15. Services connected and disconnected.
   16. Equipment or system tests and startups.
   17. Partial completions and occupancies.
   18. Substantial Completions authorized.
   19. Discovery of a difference between site conditions and the Contract Documents, and how the Architect, Owner and Owner's Designee were notified.

B. Daily reports shall be made available to Architect, Owner, or Owner's Designee.

1.13 PHOTOGRAPHS

A. Preconstruction Photographs: Before starting construction, take photographs of project site and surrounding properties, including existing items to remain during construction, from different vantage points.
   1. Take sufficient photographs to document existing conditions adjacent to property before starting the Work.
   2. Take sufficient photographs of existing buildings either on or adjoining property to accurately record physical conditions at start of construction.

3. Take sufficient photographs as required to record settlement or cracking of adjacent structures, pavements, and improvements.
4. As required, produce a key plan that identifies each photographic location.

B. Daily Construction Photographs: Take photographs daily. Select vantage points to show status of construction and progress since last photographs were taken.
   1. Take sufficient photographs to document Work performed that day.
   2. Take sufficient photographs to document Work after inspection but prior to being covered or buried.
   3. Take sufficient photographs to document all components and steps that make up an assembly.

C. Final Completion Photographs: Take photographs after date of Substantial Completion for submission with Project Record Documents.

D. Photographs shall be stored in the construction management software furnished and managed by the Contractor.

E. Contractor shall sort and organize photographs to properly document the project. Photographs should be labeled and organized for quick retrieval.

F. Architect, Owner, and Owner's Designee shall have access to view all project pictures.

G. Architect, Owner, and Owner's Designee shall have access to upload project pictures.

PART 2 - PRODUCTS (Not Used)

PART 3 - EXECUTION (Not Used)

*****END OF SECTION*****

SECTION 01 33 00 - SUBMITTAL PROCEDURES

PART 1 – GENERAL

1.1 SUMMARY

A. Section includes requirements for the Submittal Log and administrative procedural requirements for submitting Shop Drawings, Product Data, Samples, and other Submittals.

B. Related Requirements:
   1. Division 01 Section "Construction Progress Documentation" for submitting schedules and reports, including Contractor's construction schedule.
   2. Division 01 Section "Project Record Documents" for submitting record Drawings, record Specifications, and record Product Data.

C. ALL PRODUCTS INCORPORATED INTO THE CONSTRUCTION OF THIS PROJECT ARE REQUIRED TO BE SUBMITTED FOR APPROVAL REGARDLESS IF IT IS, OR IS NOT, INCLUDED IN THE SPECIFICATIONS.

1.2 DEFINITIONS

A. *Submittals:* Written, graphic information, and/or physical samples that require the Architect, Owner or Owner's Designee's responsive action prior to fabrication, procurement, and/or installation of item.

B. *Informational Submittals:* Written and graphic information and physical samples that do not require the Architect, Owner and Owner's Designee's action. Submittals may be rejected for not complying with requirements.

C. *File Transfer Protocol (FTP)*: A file sharing program such as ProCore, or an approved equal, shall be used to enable transfer of files to and from the Architect, Owner, Owner's Designee, and Contractor.

D. *Portable Document Format (PDF)*: A versatile file format that gives people an easy, reliable way to present and exchange documents - regardless of the software, hardware, or operating systems being used by anyone who views the document.

1.3 SUBMITTALS

A. *Submittal Log*: Contractor to submit a log of submittals, arranged in chronological order by specification section. Include the following information in the Submittal Log:
   1. Status.
   2. Product Name
   3. Specification Number
   4. Date Submitted for Review
   5. Response required date

6. Days the response is overdue
7. Date Submittal was Returned
8. Lead Time of Product
9. Order Release Date
10. Ship Date
11. Tracking Numbers
12. Arrival Date

Submit Submittal Log for review concurrently with Project Kick-Off Meeting. Mark those submittals requiring immediate attention to maintain orderly progress of the Work and those required early due to long lead time for manufacture or fabrication. ALL PRODUCTS INCORPORATED INTO THE CONSTRUCTION OF THIS PROJECT ARE REQUIRED TO BE SUBMITTED FOR APPROVAL REGARDLESS IF IT IS, OR IS NOT, INCLUDED IN THE SPECIFICATIONS.

B. *Project Administrative Submittals*: Submit the following information for approval:
   1. Construction Schedule – to be submitted prior to Project Kick-Off Meeting
   2. Site Phasing Plan – to be submitted prior to Project Kick-Off Meeting
   3. Contractor and Sub-contractor Licenses – to be submitted prior to Project Kick-Off Meeting
   4. Health and Safety Plan – to be submitted prior to Project Kick-Off Meeting
   5. List of Sub-contractors – to be submitted prior to Project Kick-Off Meeting
   6. Submittal Log – to be submitted prior to Project Kick-Off Meeting
   7. Quality Control Plan – to be provided prior to Pre-Construction Meeting
   8. Pre-Construction Photos – to be submitted prior to Mobilization
   9. As-Built drawings – to be provided during Project Closeout
   10. Operation and Maintenance Manual/Owner's Manual – to be provided during Project Closeout

C. *Coordination*: Coordinate preparation and processing of submittals with sequence of construction activities.
   1. Coordinate each submittal with fabrication, purchasing, testing, delivery, other submittals, and related activities that require sequential activity.
   2. Submit all submittal items required for each Specification Section concurrently unless partial submittals for portions of the Work are indicated on reviewed Submittal Log.
   3. Submit Submittals and Informational Submittals required by the same Specification Section as separate packages under separate transmittals.
   4. Coordinate transmittal of different types of submittals for related parts of the Work so processing will not be delayed because of need to review submittals concurrently for coordination.
   5. Architect, Owner and Owner's Designee reserves the right to withhold action on a submittal requiring coordination with other submittals until related submittals are received.

6. Processing Time: Allow time for submittal review, including time for resubmittals, as follows.
   a. Time for review shall commence on Architect receipt of submittal. No extension of the Contract Time will be authorized because of failure to transmit submittals far enough in advance of the Work to permit processing, including resubmittals.
   b. Initial Review: Allow **15** days for initial review of each submittal. Allow additional time if coordination with subsequent submittals is required. Architect, Owner and Owner's Designee will advise Contractor when a submittal being processed must be delayed for coordination.
7. Intermediate Review: If an intermediate submittal is necessary, process it in same manner as initial submittal.
8. Resubmittal Review: Allow **15** days for review of each resubmittal.

D. Electronic Submittals: Submittals shall only be transmitted digitally unless submittal is a physical sample or mockup. Identify and incorporate information in each electronic submittal file as follows:
   1. Assemble complete submittal package into a single indexed file incorporating submittal requirements of a single Specification Section and transmittal form.
      a. Name file with project identifier, submittal number, revision number, and submittal title.
      b. File name shall use project identifier and Specification Section number followed by a decimal point and then a sequential number (e.g., PCFBLD-01 33 00.01).
      c. Resubmittals shall include a suffix "R#" after another decimal point (e.g., PCFBLD-01 33 00.01.R1).
      d. Provide means for insertion to permanently record Architect, Owner and Owner's Designee's review and approval markings, and action taken by Architect of Owner.
   2. Transmittal Form for Electronic Submittals: Use consistent electronic form acceptable to Owner. Transmittal shall contain the following information at a minimum:
      a. Project name.
      b. Date.
      c. Name and address of Architect.
      d. Name of Construction Manager (If Applicable)
      e. Name of Contractor.
      f. Name of firm or entity that prepared submittal.
      g. Names of subcontractor, manufacturer, and supplier.
      h. Category and type of submittal.
      i. Submittal purpose and description.
      j. Specification Section number and title.
      k. Specification paragraph number or drawing designation and generic name for each of multiple items.
      l. Drawing number and detail references, as appropriate.
      m. Location(s) where product is to be installed, as appropriate.
      n. Related physical samples submitted directly.
      o. Indication of full or partial submittal.

p. Transmittal number, numbered consecutively.
q. Submittal and transmittal distribution record.
r. Other necessary identification.
s. Remarks.

3. Metadata: Include the following information as keywords in the electronic submittal file metadata:
   a. Project name.
   b. Number and title of appropriate Specification Section.
   c. Manufacturer name.
   d. Product name
4. Options: Clearly Identify options requiring selection by Architect on cover page and on page with listed options.

E. Resubmittals: Make resubmittals in same form and number of copies as initial submittal.
1. Note date and content of previous submittal. Note date and content of revision in label or title block and clearly indicate extent of revision throughout submittal.
2. The Contractor shall resubmit the relative plans, documents, ect. until they are marked with approval notation from the Architect's action stamp.
3. After a total of two (2) submissions of the same submittal, the Contractor shall incur the costs of each subsequent submittal review at $1,200.00 each. The Contractor will continue incurring said cost until submittal is approved with the Architects action stamp.
   a. Should it be the Architect, Owner or Owner's Designee's opinion that the Contractor has re-numbered submittal documents, or conducted similar practices to avoid this fee, the cost incurred shall become $2,400.00 for the duration of the project for each resubmittal meeting Section 01 33 00(E)(1)(2) thereafter.

F. Distribution: Contractor to furnish copies of final submittals to manufacturers, Sub-Contractors, suppliers, fabricators, installers, authorities having jurisdiction, and others as necessary for performance of construction activities. Show distribution on transmittal forms.

G. Use for Construction: Retain complete copies of submittals on the project site or make available to field personnel digitally. Use only approved submittals that are marked with approval notation from Architect's action stamp.

PART 2 – PRODUCTS

2.1 SUBMITTAL PROCEDURES

A. Submit electronic submittals as PDF electronic files via ProCore, or approved equal, furnished and maintained by the Contractor, and giving access to all project team members. Architect will return annotated file. Contractor to retain one copy of file as an electronic project record document file for closeout.

B. *General Submittal Procedure Requirements:* Prepare and submit submittals required by individual Specification Sections. Types of submittals are indicated in individual Specification Sections. ALL PRODUCTS INCORPORATED INTO THE CONSTRUCTION OF THIS PROJECT ARE REQUIRED TO BE SUBMITTED FOR APPROVAL REGARDLESS IF IT IS, OR IS NOT, INCLUDED IN THE SPECIFICATIONS.

C. *Certificates and Certifications Submittals*: Provide a statement that includes signature of entity responsible for preparing certification. Certificates and certifications shall be signed by an officer or other individual authorized to sign documents on behalf of that entity.
   1. Provide a digital signature with digital certificate on electronically submitted certificates and certifications where indicated.
   2. Provide a notarized statement on original paper copy certificates and certifications where indicated.

D. *Product Data*: Collect information into a single submittal for each element of construction and type of product or equipment.
   1. If information must be specially prepared for submittal because standard published data are not suitable for use, submit as Shop Drawings, not as Product Data.
   2. Mark each copy of each submittal to show which products and options are applicable.
   3. Include the following information, as applicable:
      a. Manufacturer's catalog cuts.
      b. Manufacturer's product specifications.
      c. Standard color charts. (Supply hard copy of manufactures color chart for selection. Include a photo of color chart in digital submittal).
      d. Statement of compliance with specified referenced standards.
      e. Testing by recognized testing agency.
      f. Application of testing agency labels and seals.
      g. Notation of coordination requirements.
      h. Availability and delivery time information.
   4. For equipment, include the following in addition to the above, as applicable:
      a. Wiring diagrams showing factory-installed wiring.
      b. Printed performance curves.
      c. Operational range diagrams.
      d. Clearances required to other construction, if not indicated on accompanying Shop Drawings.
   5. Submit Product Data before or concurrent with Samples.

E. *Shop Drawings*: Prepare project-specific information, drawn accurately to scale. Do not base Shop Drawings on reproductions of the Contract Documents or standard printed data, unless submittal based on Architect's digital data drawing files is otherwise permitted.
   1. Preparation: Fully illustrate requirements in the Contract Documents. Include the following information, as applicable:
      a. Identification of products.
      b. Schedules.

c. Compliance with specified standards.
d. Notation of coordination requirements.
e. Notation of dimensions established by field measurement.
f. Relationship and attachment to adjoining construction clearly indicated.
g. Seal and signature of professional engineer if specified.

2. Sheet Size: Except for templates, patterns, and similar full-size drawings, submit Shop Drawings on sheets at least 8-1/2 by 11 inches, but no larger than 24 by 36.
3. Submit Shop Drawings in the following format:
   a. PDF electronic file via ProCore or approved equal.

F. *Samples:* Submit Samples for review of kind, color, pattern, and texture for a check of these characteristics with other elements and for a comparison of these characteristics between submittal and actual component as delivered and installed.
1. Transmit Samples that contain multiple, related components such as accessories together in one submittal package.
2. Identification: Attach label on unexposed side of Samples that includes the following:
   a. Generic description of Sample.
   b. Product name and name of manufacturer.
   c. Sample source.
   d. Number and title of applicable Specification Section.
3. For projects where electronic submittals are required, provide corresponding electronic submittal of Sample transmittal, digital image file illustrating Sample characteristics, and identification information for record.
4. Disposition: Maintain sets of approved Samples at Project site, available for quality-control comparisons throughout the course of construction activity. Sample sets may be used to determine final acceptance of construction associated with each set.
   a. Samples that may be incorporated into the Work are indicated in individual Specification Sections. Such Samples must be in an undamaged condition at time of use.
   b. Samples not incorporated into the Work, or otherwise designated as Owner's property, are the property of Contractor.
5. Samples for Initial Selection: Submit manufacturer's color charts consisting of units or sections of units showing the full range of colors, textures, and patterns available.
   a. Number of Samples: Submit one full set(s) of available choices where color, pattern, texture, or similar characteristics are required to be selected from manufacturer's product line. Architect will return submittal with options selected.
6. Samples for Verification: Submit full-size units or Samples of size indicated, prepared from same material to be used for the Work, cured and finished in manner specified, and physically identical with material or product proposed for use, and that show full range of color and texture variations expected. Samples include, but are not limited to, the following: partial sections of manufactured or fabricated components; small cuts or containers of materials; complete units of repetitively used materials; swatches showing color, texture, and pattern; color range sets; and components used for independent testing and inspection.

a. Number of Samples: Submit three sets of Samples. Architect will retain two Sample sets; remainder will be returned. Mark up and retain one returned Sample set as a project record sample.
b. If variation in color, pattern, texture, or other characteristic is inherent in material or product represented by a Sample, submit at least three sets of paired units that show approximate limits of variations.

G. Product Schedule: As required in individual Specification Sections, prepare a written summary indicating types of products required for the Work and their intended location. Include the following information in tabular form:
1. Submit product schedule in the following format: PDF electronic file.

H. *Test and Inspection Reports and Log of Tests and Inspections Submittals*: Comply with required testing specified in the Contract Documents. Owner's Testing agency shall copy Architect, Contractor, Owner and Owner's Designee on the original distribution of results. Contractor shall compile all final test reports and formally submit for closeout.

I. *Qualification Data*: Prepare written information that demonstrates capabilities and experience of firm or person. Include copies of all licenses and certifications for each employee working on site.
1. Contractor or Sub-contractor must hold all licensee required to perform the Work.
2. Submit lists of completed projects with project names and addresses, contact information of architects and owners, and other information specified if requested by Architect.

J. Welding Certificates: Prepare written certification that welding procedures and personnel comply with requirements in the Contract Documents. Submit record of Welding Procedure Specification and Procedure Qualification Record on AWS forms. Include names of firms and personnel certified.

K. *Installer Certificates*: Submit written statements on manufacturer's letterhead certifying that Installer complies with requirements in the Contract Documents and, where required, is authorized by manufacturer for this specific project.

L. *Manufacturer Certificates*: Submit written statements on manufacturer's letterhead certifying that manufacturer complies with requirements in the Contract Documents. Include evidence of manufacturing experience where required.

M. *Product Certificates*: Submit written statements on manufacturer's letterhead certifying that product complies with requirements in the Contract Documents.

N. *Material Certificates*: Submit written statements on manufacturer's letterhead certifying that material complies with requirements in the Contract Documents.

O. *Material Test Reports*: Submit reports written by a qualified testing agency, on testing agency's standard form, indicating and interpreting test results of material for compliance with requirements in the Contract Documents. Owner's Testing Agency shall copy Contractor, Architect, Owner and Owner's Designee on the original distribution. Contractor shall compile all final test reports and formally submit for closeout. Reports include, but is not limited to:
   1. Environmental testing for all imported materials (loam, fill, gravel borrow, etc.)
   2. Environmental testing for all exported materials
   3. Concrete testing including: air content, slump, concrete temperature, and compression test specimens.
      a. Compressive-Strength Tests at 7 days, 14 days and 28 days. (include 3 day breaks as required to accelerate schedule)

P. Product Test Reports: Submit written reports indicating that current product produced by manufacturer complies with requirements in the Contract Documents. Base reports on evaluation of tests performed by manufacturer and witnessed by a qualified testing agency, or on comprehensive tests performed by a qualified testing agency.

Q. *Research Reports*: Submit written evidence, from a model code organization acceptable to authorities having jurisdiction, that product complies with building code in effect for Project. Include the following information:
   1. Name of evaluation organization.
   2. Date of evaluation.
   3. Time period when report is in effect.
   4. Product and manufacturers' names.
   5. Description of product.
   6. Test procedures and results.
   7. Limitations of use.

R. Pre-Construction Test Reports: Submit reports written by a qualified testing agency, on testing agency's standard form, indicating and interpreting results of tests performed before installation of product, for compliance with performance requirements in the Contract Documents.

S. Compatibility Test Reports: Submit reports written by a qualified testing agency, on testing agency's standard form, indicating and interpreting results of compatibility tests performed before installation of product. Include written recommendations for primers and substrate preparation needed for adhesion.

T. *Field Test Reports*: Submit written reports indicating and interpreting results of field tests performed either during installation of product or after product is installed in its final location, for compliance with requirements in the Contract Documents.

U. *Design Data*: Prepare and submit written and graphic information, including, but not limited to, performance and design criteria, list of applicable codes and regulations, and calculations. Include list of assumptions and other performance and design criteria and a summary of loads. Include load diagrams if applicable. Provide name and version of software, if any, used for calculations. Include page numbers.

2.2 DESIGNATED -DESIGN SERVICES

A. Performance and Design Criteria: Where professional design services or certifications by a design professional are specifically required of Contractor by the Contract Documents, provide products and systems complying with specific performance and design criteria indicated.
   1. If criteria indicated are not sufficient to perform services or certification required, submit a written request for additional information to Architect.

B. Delegated-Design Services Certification: In addition to Shop Drawings, Product Data, and other required submittals, submit digitally signed PDF electronic file and three paper copies of certificate, signed and sealed by the responsible design professional, for each product and system specifically assigned to Contractor o be designed or certified by a design professional.
   1. Indicate that products and systems comply with performance and design criteria in the Contract Documents. Include list of codes, loads, and other factors used in performing these services.

PART 3 - EXECUTION

3.1 CONTRACTORS REVIEW

A. Action and Informational Submittals: Review each submittal and check for coordination with other Work of the Contract and for compliance with the Contract Documents. Note corrections and field dimensions. Mark with approval stamp before submitting to Architect.

B. Project Closeout and Maintenance Material Submittals: See requirements in Division 01 Section "Closeout Procedures."

C. Approval Stamp: Stamp each submittal with a uniform, approval stamp. Include Project name and location, submittal number, Specification Section title and number, name of reviewer, date of Contractor's approval, and statement certifying that submittal has been reviewed, checked, and approved for compliance with the Contract Documents.

3.2 ARCHITECT'S ACTION

A. General: Architect will not review submittals that do not bear Contractor's approval stamp and will return them without action.

B. Action Submittals: Architect will review each submittal, make marks to indicate corrections or revisions required, and return it. Architect will stamp each submittal with an action stamp and will mark stamp appropriately to indicate action.
C. Informational Submittals: Architect will review each submittal and will not return it, or will return it if it does not comply with requirements. Architect will forward each submittal to appropriate party.
D. Incomplete submittals are unacceptable, will be considered nonresponsive, and will be returned for resubmittal without review.
E. Submittals not required by the Contract Documents may not be reviewed and may be discarded.

*****END OF SECTION*****

SECTION 01 40 00 - QUALITY REQUIREMENTS

PART 1 – GENERAL

1.1 SUMMARY

A. Section includes administrative and procedural requirements for quality assurance and quality control.

B. Testing and inspecting services are required to verify compliance with requirements specified or indicated. These services do not relieve Contractor of responsibility for compliance with the Contract Document requirements.
   1. Specified tests, inspections, and related actions do not limit Contractor's other quality-assurance and control procedures that facilitate compliance with the Contract Document requirements.
   2. Requirements for Contractor to provide quality-assurance and -control services required by Architect, Owner or Owner’s Designee, or authorities having jurisdiction are not limited by provisions of this section.
   3. Specific test and inspection requirements are not specified in this Section.

1.2 DEFINITIONS

A. Quality-Assurance Services: Activities, actions, and procedures performed before and during execution of the Work to guard against defects and deficiencies and substantiate that proposed construction will comply with requirements.

B. Quality-Control Services: Tests, inspections, procedures, and related actions during and after execution of the Work to evaluate that actual products incorporated into the Work and completed construction comply with requirements. Services do not include contract enforcement activities performed by Architect.

C. Mockups: Full-size physical assemblies that are constructed on-site. Mockups are constructed to verify selections made under Sample submittals; to demonstrate aesthetic effects and, where indicated, qualities of materials and execution; to review coordination, testing, or operation; to show interface between dissimilar materials; and to demonstrate compliance with specified installation tolerances. Mockups are not Samples. Unless otherwise indicated, approved mockups establish the standard by which the Work will be judged.

D. Preconstruction Testing: Tests and inspections performed specifically for a project before products and materials are incorporated into the Work, to verify performance or compliance with specified criteria.

E. Product Testing: Tests and inspections that are performed by a Nationally Recognized Testing Laboratory, a National Voluntary Laboratory Accreditation Program, or a testing agency qualified to conduct product testing and acceptable to authorities having jurisdiction, to establish product performance and compliance with specified requirements.

F. Source Quality-Control Testing: Tests and inspections that are performed at the source, e.g., plant, mill, factory, or shop.

G. Field Quality-Control Testing: Tests and inspections that are performed on-site for installation of the Work and for completed Work.

H. Testing Agency: An entity engaged to perform specific tests, inspections, or both. Testing laboratory shall mean the same as testing agency.

I. Installer/Applicator/Erector: Contractor or another entity engaged by Contractor as an employee, Sub-contractor, or Sub-subcontractor, to perform a particular construction operation, including installation, erection, application, and similar operations.
   1. Use of trade-specific terminology in referring to a trade or entity does not require that certain construction activities be performed by accredited or unionized individuals, or that requirements specified apply exclusively to specific trade(s).

J. Experienced: When used with an entity or individual, "experienced" means having successfully completed a minimum of five previous projects similar in nature, size, and extent to this Project; being familiar with special requirements indicated; and having complied with requirements of authorities having jurisdiction.

1.3 CONFLICTING REQUIREMENTS

A. Referenced Standards: If compliance with two or more standards is specified and the standards establish different or conflicting requirements for minimum quantities or quality levels, comply with the most stringent requirement. Refer conflicting requirements that are different, but apparently equal, to Architect, Owner or Owner’s Designee for a decision before proceeding.

B. Minimum Quantity or Quality Levels: The quantity or quality level shown or specified shall be the minimum provided or performed. The actual installation may comply exactly with the minimum quantity or quality specified, or it may exceed the minimum within reasonable limits. To comply with these requirements, indicated numeric values are minimum or maximum, as appropriate, for the context of requirements. Refer uncertainties to Architect, Owner or Owner’s Designee for a decision before proceeding.

1.4 SUBMITTALS

A. Contractor's Quality-Control Plan: For quality-assurance and quality-control activities and responsibilities.

B. Testing Agency Qualifications: For testing agencies specified in "Quality Assurance" Article to demonstrate their capabilities and experience. Include proof of qualifications in the form of a recent report on the inspection of the testing agency by a recognized authority.

C. Log of Tests and Inspections

D. D. Permits, Licenses, and Certificates

1.5 CONTRACTOR'S QUALITY CONTROL PLAN

A. Quality Control Plan, General: Submit quality-control plan not less than five days prior to Project Kickoff Meeting. Submit in format acceptable to Architect, Owner or Owner's Designee. Identify personnel, procedures, controls, instructions, tests, records, and forms to be used to carry out Contractor's quality-assurance and quality-control responsibilities.

B. Quality Control Personnel Qualifications: Engage qualified full-time personnel trained and experienced in managing and executing quality assurance and quality control procedures similar in nature and extent to those required for the Project. Project Quality Control manager may also serve as Project Superintendent.

C. Submittal Quality Control Procedure: Describe procedures for ensuring compliance with requirements through review and management of submittal process. Indicate qualifications of personnel responsible for submittal preparation and review.

D. Testing and Inspection: In the Quality Control Plan, include a comprehensive log of Work requiring testing or inspection prior to acceptance by the Architect, Owner, or Owner's designee, including the following:
   1. Contractor-performed tests and inspections including subcontractor-performed tests and inspections. Required tests and inspections, and Contractor-elected tests and inspections, include but are not limited to:
      a. Pre-commissioning test reports.
      b. Special inspections required by authorities having jurisdiction and indicated on the "Statement of Special Inspections."
      c. Owner-performed tests and inspections indicated in the Contract Documents.

E. Continuous Inspection of Workmanship: Describe process for continuous inspection during construction to identify and correct deficiencies in workmanship in addition to testing and inspection specified. Indicate types of corrective actions to be required to bring work into compliance with standards of workmanship established by Contract Document requirements and approved mockups.

F. Monitoring and Documentation: Maintain testing and inspection reports including log of approved and rejected results. Include work Architect, Owner or Owner's designee has indicated as nonconforming or defective. Indicate corrective actions taken to bring nonconforming work into compliance with requirements. Comply with requirements of authorities having jurisdiction.

1.6 REPORTS AND DOCUMENTS

A. Test and Inspection Reports: Prepare and submit certified written reports specified in other Sections. Include the following:
   1. Date of issue.
   2. Project title and number.
   3. Name, address, and telephone number of testing agency.
   4. Dates and locations of samples and tests or inspections.
   5. Names of individuals making tests and inspections.
   6. Description of the Work and test and inspection method.
   7. Identification of product and Specification Section.
   8. Complete test or inspection data.
   9. Test and inspection results and an interpretation of test results. (Pass / Fail)
   10. Record of temperature and weather conditions at time of sample taking and testing and inspecting.
   11. Comments or professional opinion on whether tested or inspected Work complies with the Contract Document requirements.
   12. Name and signature of laboratory inspector.
   13. Recommendations on re-testing and re-inspecting.
   14. Distribution list for inspection results

B. Manufacturer's Technical Representative's Field Reports: Prepare written information documenting manufacturer's technical representative's tests and inspections specified in other Sections. Include the following
   1. Name, address, and telephone number of technical representative making report.
   2. Statement on condition of substrates and their acceptability for installation of product.
   3. Summary of installation procedures being followed, whether they comply with requirements and, if not, what corrective action was taken.
   4. Results of operational and other tests and a statement of whether observed performance complies with requirements.
   5. Other required items indicated in individual Specification Sections.

C. Factory-Authorized Service Representative's Reports: Prepare written information documenting manufacturer's factory-authorized service representative's tests and inspections specified in other Sections. Include the following:
   1. Name, address, and telephone number of factory-authorized service representative making report.
   2. Statement that equipment complies with requirements.

3. Results of operational and other tests and a statement of whether observed performance complies with requirements.
4. Statement whether conditions, products, and installation will affect warranty.
5. Other required items indicated in individual Specification Sections.

D. Permits, Licenses, and Certificates: For Owner's records, submit copies of permits, licenses, certifications, inspection reports, releases, jurisdictional settlements, notices, receipts for fee payments, judgments, correspondence, records, and similar documents, established for compliance with standards and regulations bearing on performance of the Work.

1.7 QUALITY ASSURANCE

A. General: Qualifications paragraphs in this article establish the minimum qualification levels required; individual Specification Sections specify additional requirements.

B. Manufacturer Qualifications: A firm experienced in manufacturing products or systems similar to those indicated for this Work and with a record of successful in-service performance, as well as sufficient production capacity to produce required units.

E. Fabricator Qualifications: A firm experienced in producing products similar to those indicated for this Work and with a record of successful in-service performance, as well as sufficient production capacity to produce required units.

F. Installer Qualifications: A firm or individual experienced in installing, erecting, or assembling products that are similar in material, design, and extent to that indicated for this Work, whose work has resulted in construction with a record of successful in-service performance.

G. Professional Engineer Qualifications: A professional engineer who is legally licensed to practice in the State of Rhode Island jurisdiction where Project is located and who is experienced in providing engineering services of the kind indicated. Engineering services are defined as those performed for installations of the system, assembly, or product that are similar in material, design, and extent to those indicated for this Project.

H. Professional Land Surveyor Qualifications: A professional land surveyor who is legally qualified to perform topographic and property line surveys in the State of Rhode Island and who has sufficient experience providing record documents or other required services.

I. Specialists: Certain Specification Sections require that specific construction activities shall be performed by entities who are recognized experts in those operations. Specialists shall satisfy qualification requirements indicated and shall be engaged for the activities indicated.
   1. Requirements of authorities having jurisdiction shall supersede requirements for specialists.

J. Testing Agency Qualifications: Shall be acceptable Testing Agencies recognized by a NRTL, an NVLAP, or an independent agency with the experience and capability to conduct testing and inspecting indicated, as documented according to ASTM E 329; and with additional qualifications specified in individual sections; and, where required by authorities having jurisdiction, that is acceptable to authorities.
   1. NRTL: A nationally recognized testing laboratory according to 29 CFR 1910.7.
   2. NVLAP: A testing agency accredited according to NIST's National Voluntary Laboratory Accreditation Program.

K. Manufacturer's Technical Representative Qualifications: An authorized representative of manufacturer who is trained and approved by manufacturer to observe and inspect installation of manufacturer's products that are similar in material, design, and extent to those indicated for this Project.

L. Preconstruction Testing: Where testing agency is indicated to perform preconstruction testing for compliance with specified requirements for performance and test methods, comply with the following:
   1. Contractor responsibilities include the following:
      a. Provide test specimens representative of proposed products and construction.
      b. Submit specimens in a timely manner with sufficient time for testing and analyzing results to prevent delaying the Work.
      c. Provide sizes and configurations of test assemblies, mockups, and laboratory mockups to adequately demonstrate capability of products to comply with performance requirements.
      d. Build site-assembled test assemblies and mockups using installers who will perform same tasks for project.
      e. Build laboratory mockups at testing facility using personnel, products, and methods of construction indicated for the completed Work.
      f. When testing is complete, remove test specimens, assemblies, mockups, and laboratory mockups; do not reuse products on Project.

   2. Testing Agency Responsibilities: Submit a certified written report of each test, inspection, and similar quality-assurance service to Contractor, Owner, and Architect. Interpret tests and inspections and state in each report whether tested and inspected work complies with or deviates from the Contract Documents.

M. Mockups: Before installing portions of the Work requiring mockups, build mockups for each form of construction and finish required to comply with the following requirements, using materials indicated for the completed Work:
   1. Build mockup in location and of size indicated.
   2. Notify architect seven days in advance of dates and times when mockups will be constructed.
   3. Demonstrate the proposed range of aesthetic effects and workmanship.

4. Obtain Architect's approval of mockups before starting work, fabrication, or construction.
   a. Allow fourteen days for initial review, testing, and review of each mockup.
5. Maintain mock-up during construction in an undisturbed condition as a standard for judging the completed Work.

1.8 QUALITY CONTROL

A. Contractor Responsibilities: Contractor shall coordinate with the Owner's qualified testing agency to perform required services. Scheduling tests and inspections are the Contractor's responsibility and shall be completed in accordance with the Contract Documents. Perform additional quality-control activities required to verify that the Work complies with requirements, whether specified or not.
   1. Provide quality-control services specified by authorities having jurisdiction. Perform quality-control services required of Contractor by authorities having jurisdiction, whether specified or not.
   2. Where services are indicated as Contractor's responsibility, engage a qualified testing agency to perform these quality-control services. Contractor shall not employ same entity engaged by Owner, unless agreed to in writing by Owner.
   3. Notify testing agencies at least 24 hours in advance of time when work that requires testing or inspecting will be performed.
   4. Where quality-control services are indicated as Contractor's responsibility, submit a certified written report of each quality-control service.
   5. Testing and inspecting requested by Contractor and not required by the Contract Documents are Contractor's responsibility.
   6. Submit additional copies of each written report directly to authorities having jurisdiction when they so direct.

B. Manufacturer's Field Services: Where indicated, Contractor shall engage a manufacturer's representative to observe and inspect the Work. Manufacturer's representative's services include examination of substrates and conditions, verification of materials, inspection of completed portions of the Work, and submittal of written reports.

C. Re-testing/Re-inspecting: Regardless of whether original tests or inspections were Contractor's responsibility, provide quality-control services, including re-testing and re-inspecting, for construction that replaced Work that failed to comply with the Contract Documents at the Contractor's expense.

D. Testing Agency Responsibilities: Cooperate with Architect, Owner, Owner's designee and Contractor in performance of duties. Provide qualified personnel to perform required tests and inspections.
   1. Notify Architect, Owner, Owner's designee and Contractor promptly of irregularities or when deficiencies are observed in the Work during performance of its services.
   2. Determine the location from which test samples will be taken and conducted.

3. Conduct and interpret tests and inspections and state within each report whether tested and inspected work complies with or deviates from requirements.
4. Submit a certified written report, in duplicate, of each test, inspection, and similar quality-control service through distribution list established at the beginning of the project. Contractor, Architect, Owner and Owner's Designee shall be on distribution list.
5. Do not release, revoke, alter, or increase the Contract Document requirements or approve or accept any portion of the Work.
6. Do not perform any duties of Contractor.

E. Associated Services: All project members will cooperate with agencies performing required tests, inspections, and similar quality-control services, and provide reasonable auxiliary services as requested. Notify project team sufficiently in advance of operations to permit assignment of personnel. Provide the following:
1. Access to the Work.
2. Incidental labor and facilities necessary to facilitate tests and inspections.
3. Adequate quantities of representative samples of materials that require testing and inspecting. Assist agency in obtaining samples.
4. Facilities for storage and field curing of test samples.
5. Delivery of samples to testing agencies.
6. Preliminary design mix proposed for use for material mixes that require control by testing agency.
7. Security and protection for samples and for testing and inspecting equipment at Project site.

F. Coordination: Contractor shall coordinate sequence of activities to accommodate required quality assurance and quality control services with a minimum of delay and to avoid necessity of removing and replacing construction to accommodate testing and inspecting.
1. Schedule times for tests, inspections, obtaining samples, and similar activities.

G. Log of Tests and Inspections: Prepare a Log of tests, inspections, and similar quality control services required by the Contract Documents. Coordinate and submit concurrently with Contractor's construction schedule. Update as the Work progresses.
1. Distribution: Distribute Log to Owner, Owner's designee, testing agencies, and each party involved in performance of portions of the Work where tests and inspections are required.
2. Prepare Log in digital form for approval and include the following:
   a. Specification Section number and title.
   b. Entity responsible for performing tests and inspections.
   c. Description of test and inspection.
   d. Identification of applicable standards.
   e. Identification of test and inspection methods.
   f. Number of tests and inspections required.
   g. Time schedule or time span for tests and inspections.
   h. Requirements for obtaining samples.

i. Date test or inspection was conducted
j. Results indicating Pass or Fail when received.
k. Date test or inspection results were transmitted to Architect.

PART 2 - PRODUCTS (Not Used)

PART 3 – EXECUTION

3.1 ACCEPTABLE TESTING AGENCIES

A. Testing shall be conducted in accordance with the local and state regulations and site-specific permits.

3.2 TEST AND INSPECTION LOG

A. Maintain log at Project site. Post changes and revisions as they occur. Provide access to test and inspection log for Architect, Owner, and Owner's Designee reference during normal working hours.

3.3 REPAIR AND PROTECTION

A. General: On completion of testing, inspecting, sample taking, and similar services, repair damaged construction and restore substrates and finishes.
   1. Provide materials and comply with installation requirements specified in other Specification Sections or matching existing substrates and finishes. Restore areas and extend restoration into adjoining areas.

B. Protect construction exposed by or for quality control service activities.

C. Repair and protection are Contractor's responsibility, regardless of the assignment of responsibility for quality control services.

*****END OF SECTION*****

SECTION 01 42 00 - REFERENCES

PART 1 - GENERAL

1.1 DEFINITIONS

A. General: Basic Contract definitions are included in the Conditions of the Contract.

B. "Approved": When used to convey Architect's action on Contractor's submittals, applications, and requests, "approved" is limited to Architect's duties and responsibilities as stated in the Conditions of the Contract.

C. "Directed": A command or instruction by Architect. Other terms including "requested," "authorized," "selected," "required," and "permitted" have the same meaning as "directed."

D. "Indicated": Requirements expressed by graphic representations or in written form on Drawings, in Specifications, and in other Contract Documents. Other terms including "shown," "noted," "scheduled," and "specified" have the same meaning as "indicated."

E. "Regulations": Laws, ordinances, statutes, and lawful orders issued by authorities having jurisdiction, and rules, conventions, and agreements within the construction industry that control performance of the Work.

F. "Furnish": Supply and deliver to Project site, ready for unloading, unpacking, assembly, installation, and similar operations.

G. "Install": Operations at Project site including unloading, temporarily storing, unpacking, assembling, erecting, placing, anchoring, applying, working to dimension, finishing, curing, protecting, cleaning, and similar operations.

H. "Provide": Furnish and install, complete and ready for the intended use.

I. "Project Site": Space available for performing construction activities. The extent of Project site is shown on Drawings and may or may not be identical with the description of the land on which Project is to be built.

1.2 INDUSTRY STANDARDS

A. Applicability of Standards: Unless the Contract Documents include more stringent requirements, applicable construction industry standards have the same force and effect as if bound or copied directly into the Contract Documents to the extent referenced. Such standards are made a part of the Contract Documents by reference.

B. Publication Dates: Comply with standards in effect as of date of the Contract Documents unless otherwise indicated.

C. Copies of Standards: Each entity engaged in construction on Project should be familiar with industry standards applicable to its construction activity. Copies of applicable standards are not bound with the Contract Documents.
   1. Where copies of standards are needed to perform a required construction activity, obtain copies directly from publication source.

1.3 ABBREVIATIONS AND ACRONYMS

A. Industry Organizations: Where abbreviations and acronyms are used in Specifications or other Contract Documents, they shall mean the recognized name of the entities indicated in Gale's
"Encyclopedia of Associations: National Organization of the U.S." or in Columbia Books' "National Trade & Professional Associations of the United States."

B. Code Agencies: Where abbreviations and acronyms are used in Specifications or other Contract Documents, they shall mean the recognized name of the entities in the following list. Names, telephone numbers, and Web sites are subject to change and are believed to be accurate and up- to-date as of the date of the Contract Documents.
   1. IAPMO - International Association of Plumbing and Mechanical Officials; www.iapmo.org.
   2. ICC - International Code Council; www.iccsafe.org.
   3. ICC-ES - ICC Evaluation Service, Inc.; www.icc-es.org.

C. Federal Government Agencies: Where abbreviations and acronyms are used in Specifications or other Contract Documents, they shall mean the recognized name of the entities in the following list. Information is subject to change and is up-to-date as of the date of the Contract Documents.
   1. CPSC - Consumer Product Safety Commission; www.cpsc.gov.
   2. DOC - Department of Commerce; National Institute of Standards and Technology; www.nist.gov.
   3. DOE - Department of Energy; www.energy.gov.
   4. EPA - Environmental Protection Agency; www.epa.gov.
   5. HUD - Department of Housing and Urban Development; www.hud.gov.
   6. OSHA - Occupational Safety & Health Administration; www.osha.gov.
   7. SD - Department of State; www.state.gov.
   8. USDA - Department of Agriculture; Rural Utilities Service; www.usda.gov.
   9. USPS - United Postal Service; www.usps.com.

D. Standards and Regulations: Where abbreviations and acronyms are used in Specifications or other Contract Documents, they shall mean the recognized name of the standards and regulations in the following list. Names, telephone numbers, and Web sites are subject to change and are believed to be accurate and up-to-date as of the date of the Contract Documents.

1. CFR - Code of Federal Regulations; Available from Government Printing Office www.gpo.gov/fdsys.

PART 2 - PRODUCTS (Not Used)

PART 3 – EXECUTION (Not used)

*****END OF SECTION*****

SECTION 01 50 00 - TEMPORARY FACILITIES, EQUIPMENT AND CONTROLS

PART 1 – GENERAL

1.1 RELATED DOCUMENTS

A. The General Conditions, Supplementary Conditions and applicable portions of Division 1 of the specification are a part of this Section, which shall consist of all labor, equipment and materials necessary to complete all temporary facilities and controls work indicated on the drawings and herein specified.

1.2 RELATED REQUIREMENTS SPECIFIED ELSEWHERE

A. Division 01 Section "Summary" for Health and Safety Precautions.

B. Division 01 Section "Submittals" for submittal procedures on temporary facilities and equipment.

1.3 SUBMITTALS

A. For each temporary system, Contractor shall submit their plan for installing, utilizing, and removing the temporary system. Submittal shall include any required drawings, data sheets, and/or calculations for the system.

1.4 USE CHARGES

A. General: Installation and removal of and use charges for temporary facilities shall be included in the Contract Sum unless otherwise indicated. Allow other entities to use temporary services and facilities without cost, including, but not limited to Architect, Owner or Owner's designees, testing agencies, and authorities having jurisdiction.

B. Sewer Service: Pay sewer-service use charges for sewer usage by all entities for construction operations. If utilizing existing building sewer, Contractor will not be charged for usage.

C. Water Service: Pay water-service use charges for water used by all entities for construction operations. If utilizing existing building water, Contractor will not be charged for usage.

D. Electric Power Service: Pay electric-power-service use charges for electricity used by all entities for construction operations. If utilizing existing building power, Contractor will not be charged for usage.

1.5 ACCESS

A. Provide an adequate access and/or roads to the site of the structure, if required for the execution of the work. Coordinate access points with Owner.

B. Traffic Controls: Comply with requirements of authorities having jurisdiction.
   1. Protect existing site improvements to remain including curbs, pavement, and utilities.
   2. Maintain access for fire-fighting equipment and access to fire hydrants.

C. Parking: Coordinate with Owner for use of existing parking areas for construction personnel.

D. Provide and maintain at least one permanent or temporary access to each working elevation, which is to be permanently occupied.

E. Provide all necessary scaffolding, platforms, ladders, ramps, chutes, temporary stairs, and maintain in a safe condition throughout the construction process.

1.6 HOISTING FACILITIES

A. Provide hoisting facilities as required for the vertical movement of all materials.

B. Comply with OSHA and other governing codes for all hoists, conveyors, and elevators; and maintain the facilities in compliance with the law.

1.7 GUARDRAILS, FLOOR, AND WALL OPENINGS, AND STAIRWAYS

A. Provide guardrails, barricades, handrails and covers for floor, roof and wall openings, and stairways.

B. Comply with OSHA and other governing codes with regard to standards and requirements for guardrails, openings and stairways.

1.8 TRASH

A. Contractor responsible for removal and disposal of all existing and generated debris.

B. Contractor to divert as much demolition and construction waste (by weight or by volume) as possible from landfill disposal by recycling or salvage.

1.9 DISPOSAL OF DEMOLISHED / RECYCLED MATERIALS

A. At regular intervals, remove from the site all debris, rubbish and other materials resulting from construction operations, and legally dispose of off the site. Storage or sale of materials for recycling or demolished materials or to be removed will not be permitted on the site.

B. Burning of removed materials from demolished structures, if applicable, will not be permitted on the site.

C. Collect wastes daily.

D. Refer to Section 017100 -Cleaning- for additional requirements.

E. Comply with NFPA 241 for removal of combustible waste.

F. Handle hazardous, dangerous, or unsanitary waste materials separately from other waste by containerizing properly.

G. Dispose of all waste and materials to be recycled in a legal manner.

H. Provide sufficient trash receptacles on each floor of the building.

I. Collect and deposit debris in such collection facilities.

J. Remove all debris from the job site on a regular basis. Do not allow trash to accumulate or remain on site for longer than 48 hours.

1.10 SANITATION FACILITIES

A. Provide adequate temporary toilet facilities.

B. Maintain such facilities in a clean, sanitary condition.

1.11 DRINKING WATER

A. Provide potable water in convenient and accessible locations.

B. Provide all piping, fitting, valves, connections, etc., necessary for furnishing water during the construction period.

C. Pay costs of water and temporary services.

1.12 TEMPORARY FIRE PROTECTION

A. Provide general temporary fire protection as required per State and Federal requirements.

B. Permanent fire protection equipment, used for fire protection during construction, shall be the responsibility of the Installer.

1.13 WEATHER PROTECTION AND TEMPORARY HEAT/VENTILATION

A. During construction, provide weather protection and heating/ventilating for protection of the work force and construction:
   1. Before permanent enclosure of the building. Protect PEMB walls prior to roof being installed to maintain weather tight.

2. After enclosure, but prior to finishing operations and:
3. During finishing operations.

B. Refer throughout these specifications for the type, duration and level of requirements for heating/ventilating and weather protection.

C. After permanent enclosures have been installed and the permanent heating system is sufficiently completed to allow safe operation, as determined by the Architect and/or Owner, the permanent system may be used upon written authorization by the Architect. Use of the permanent system in no way implies approval of the installation. Pay all costs for energy consumed.

D. Conserve energy by maintaining maximum temperature and thermostat settings of:
1. 65 degrees F - during normal working hours, and;
2. 58 degrees F - during other periods of time.

E. Coordinate with the work of Division 23.

1.14 TEMPORARY ELECTRICAL SERVICE

A. Provide temporary electric service, power and lighting.

B. Pay all costs for energy consumed during construction.

C. Service cost and installation may be provided under Division 26, as well as any other work of temporary electric service herein specified.

D. Coordinate with Division 26.

E. Provide all required connections, wiring, feeders, lamps, etc., including the following:

1. Provide equivalent of 5 foot candles per 1,000 square feet of floor area in the building. Install sufficient wiring and outlets to insure proper lighting in all temporary construction sheds and all exterior protective lighting. Provide all necessary transformers, motors, cables, panelboards, switches, etc.
2. Provide feeders of sufficient capacity for the requirements of the work, sufficient number of outlets, 120/208 volt, or equivalent, conveniently located so that extension cords not exceeding 100 feet will reach all work requiring artificial light or power.
3. At the end of the day's work, close all light and power, other than the minimum required security illumination.

1.15 STORAGE

A. Coordinate the allocation of storage areas to the various trades and sub-contractors.

B. Such storage areas shall be approved by the Owner.

C. Maintain such areas in a clean condition at all times.

1.16 SPECIAL CONTROLS

A. Maintain premises and property free from accumulations of waste, debris, and rubbish caused by operations.

B. Hazards Control:
   1. Store volatile wastes in covered metal containers and remove from the premises daily.
   2. Prevent accumulation of wastes creating hazardous conditions.
   3. Provide adequate ventilation during use of volatile or noxious substances.
   4. Conduct cleaning and disposal operations to comply with local ordinances and anti-pollution laws.
   5. Do not burn or bury rubbish and waste materials on the project site.
   6. Do not dispose of volatile wastes such as mineral spirits, oil or paint thinner in storm or sanitary drains.
   7. Do not dispose of wastes into streams or waterways.
   8. Remove snow and ice from access to buildings.
   9. Maintain cleaning until project, or portion thereof, is occupied by the Owner.

1.17 OTHER TEMPORARY FACILITIES AND CONTROLS

A. Field Office:
   1. Contractor to provide a field trailer at the start of construction.
   2. Contractor can coordinate with the Owner for a location of a field office within the building as construction progresses.

B. Protection of Work-In-Place:
   1. Thoroughly protect all completed work and stored materials.
   2. Provide boards, cloths, planks, waterproof paper, canvas or other means of protection and use as required to prevent damage.
   3. Replace or rectify work or materials damaged by workmen, by the elements or by any other cause, to the satisfaction of the Architect and Owner and at no additional expense to the Owner.
   4. Do not allow workmen, including those of any sub-contractor or supplier, to mark finish surfaces with marking pens or other such devices which are not readily erasable.
      a. Surfaces marked with Sharpie pen or similar must be cut out and replaced at the Contractor's expense.

1.18 SPECIAL OPENINGS

A. Early in the work, confer with all parties providing apparatus of various kinds. Should any be of a size and character that cannot be properly taken into the building to its indicated position through openings shown, make necessary arrangements for the installation of such items in a manner satisfactory to those providing them and to the Owner. Make good on any damage that may be caused thereby.

1.19 REMOVAL OF TEMPORARY FACILITIES

A. Remove all items indicated above and other construction of a temporary nature from the site as soon as the progress of the work, in the opinion of the Architect, will permit.
B. Recondition the portions of the site occupied by temporary facilities and restore to a condition acceptable to the Architect.

PART 2 - PRODUCTS

2.1 MATERIALS

A. Portable Chain-Link Fencing: Minimum 2-inch (50-mm), 0.148-inch- (3.8-mm-) thick, galvanized-steel, chain-link fabric fencing; minimum 6 feet (1.8 m) high with galvanized-steel pipe posts; minimum 2-3/8-inch- (60-mm-) OD line posts and 2-7/8-inch- (73-mm-) OD corner and pull posts, with 1-5/8-inch- (42-mm-) OD top and bottom rails. Provide concrete or galvanized steel with sand bags for supporting posts.
   1. Temporary Fencing should be new or in “like new” condition.
   2. Temporary fencing shall be maintained daily.

B. Plastic Sheet: Polyethylene sheeting, 6-mil minimum thickness. Fire Retardant Plastic Sheeting only.

C. Materials utilized for temporary connections and utilities shall conform to the same standards as the materials being provided for permanent installation under the scope of this Work.

2.2 TEMPORARY FACILITIES

A. Field Offices, General: Prefabricated or mobile units with serviceable finishes, temperature controls, and foundations adequate for normal loading.
   1. Field offices with peeling exterior paint, broken windows, or appear to lack maintenance and upkeep are not allowed and shall be removed from site at the Contractors expense.

B. Storage and Fabrication Sheds or Containers: Provide sheds or containers sized, furnished, and equipped to accommodate materials and equipment for construction operations.
   1. Store combustible materials apart from building.

C. Temporary Bus Stop: Provide temporary bus stops when existing bus stops are blocked during construction activities or is unusable.

1. Temp Bus Stop needs to comply with ADA and RIPTA standards. Relocate signs and construct temporary plywood curb extensions as needed.
2. Coordinate all bus stop closures with Owner 2 weeks in advance.
3. Furnish and install any temporary signage as required to clearly redirect pedestrians and riders.

D. Dumpsters for Construction Waste: Contractor shall provide waste-collection containers in sizes adequate to handle waste from construction operations for the duration of the project.
   1. Comply with requirements of authorities having jurisdiction.
   2. Dumpster shall be swapped out when full; and debris should never extend above the top of the dumpster.
   3. Dumpster shall be covered when active loading is not taking place.
   4. Location of dumpster shall be adequately protected to prevent pavement damage, damage to the surrounding area, and staining.

E. Restroom facilities: Contractor shall provide sanitary temporary restroom facilities according to OSHA standards for construction sites.
   1. The contractor shall provide adequate washing facilities for employees engaged in the application of paints, coating, herbicides, or insecticides, or in other operations where contaminants may be harmful to the employees. Such facilities shall be in near proximity to the worksite and shall be so equipped as to enable employees to remove such substances.
   2. Contractors are not permitted to use RIPTA facilities.

PART 3 - EXECUTION

3.1 INSTALLATION, GENERAL

A. Locate facilities where they will serve project adequately and result in minimum interference with performance of the Work. Relocate and modify facilities as required by progress of the Work. Indicate location of facilities on all phasing plans and coordinate with Owner.

B. Dispose of or remove all temporary materials at the completion of the project.

3.2 TEMPORARY UTILITY INSTALLATION

A. Install temporary service or connect to existing services as necessary to complete the construction operations.
   1. Arrange with utility company, Owner, and existing users for time when service can be interrupted, if necessary, to make connections for temporary services.

B. Sanitary Facilities: Provide temporary toilets for use of construction personnel. Comply with requirements of authorities having jurisdiction for type, number, location, operation, and maintenance of fixtures and facilities. Maintain sanitary conditions at all times.

3.3 SECURITY AND PROTECTION OF EXISTING FACILITIES

A. Protection of Existing Facilities: Protect existing vegetation, equipment, structures, utilities, and other improvements at Project site and on adjacent properties, except those indicated to be removed or altered. Repair any damage to existing facilities.

B. Environmental Protection: Provide protection, operate temporary facilities, and conduct construction as required to comply with environmental regulations and that minimize possible air, waterway, and subsoil contamination or pollution or other undesirable effects.

C. Clean, repair, and restore adjoining properties and roads affected by erosion and sedimentation from Project Site during the course of Project. Remove erosion and sedimentation controls and restore and stabilize areas disturbed during removal.

D. Storm water Control: Comply with requirements of authorities having jurisdiction. Provide barriers in and around excavations and subgrade construction to prevent flooding by runoff of storm water from heavy rains.

E. Tree and Plant Protection: Comply with requirements specified in Construction Documents.

F. Pest Control: Engage pest-control service to recommend practices to minimize attraction and harboring of rodents, roaches, and other pests and to perform extermination and control procedures at regular intervals so project site will be free of pests and their residues at Substantial Completion. Perform control operations lawfully, using environmentally safe materials.

G. Site Enclosure Fence: Before construction operations begin, furnish and install site enclosure fence in a manner that will prevent people and animals from easily entering site except by entrance gates.

H. Confirm current site enclosure fencing is in good condition and in accordance with the Drawings.
   1. Extent of Fence: As indicated on Drawings or as required for a secure site.
   2. Maintain security by limiting number of keys and restricting distribution to authorized personnel. Furnish a set of keys to Owner.

I. Barricades, warning signs, and lights: Comply with requirements of authorities having jurisdiction for erecting structurally adequate barricades, including warning signs and lighting.

J. Termination and Removal: Remove each temporary facility when need for its service has ended or when it has been replaced by authorized use of a permanent facility. If necessary, complete Work that may have been delayed because of interference with temporary facility.

Repair damaged Work, clean exposed surfaces, and replace construction that cannot be satisfactorily repaired.

1. Materials and facilities that constitute temporary facilities are property of Contractor. Owner reserves right to take possession of Project identification signs.
2. Remove temporary roads and paved areas not intended for or acceptable for integration into final product. Where area is intended for landscape development, remove soil and aggregate fill that do not comply with requirements for fill or subsoil. Remove materials contaminated with road oil, asphalt and other petrochemical compounds, and other substances that might impair growth of plant materials or lawns. Repair or replace street paving, curbs, and sidewalks at temporary entrances, as required by authorities having jurisdiction.
3. At Substantial Completion, repair, renovate, and clean permanent facilities used during construction period. Comply with final cleaning requirements specified in 01 77 00 "Closeout Procedures."

*****END OF SECTION*****

SECTION 01 55 26 - TRAFFIC CONTROL

PART 1 - GENERAL

1.1 RELATED DOCUMENTS

A. Drawings and General Provisions of Contract, including General and Supplementary Conditions and other Division 1 Specifications Sections, apply to this Section.

1.2 SUMMARY

A. Access and Safety - The Contractor shall keep existing public highways/accessways open to vehicular and pedestrian traffic for the full length and duration of the project and shall provide sufficient number of travel lanes and pedestrian pass ways to accommodate traffic ordinarily using the street and sidewalks. The Contractor shall maintain and protect traffic in accordance with the current edition of "The Manual on Uniform Traffic Control Devices (MUTCD), Part IV". The portions of the streets over which traffic is maintained shall be kept in such a condition that traffic will be safely and adequately accommodated. Sidewalks are to be kept free of excavated materials, tools, machinery and other subjects that will impede or endanger pedestrian traffic. Suitable ingress and egress provisions shall be made for abutting owners and tenants at all times.

B. Traffic men - The Contractor shall furnish police to act as traffic men at all locations required by the City of Pawtucket. The traffic men will be assigned in conformance with requirements of the Citty of Pawtucket and the Maintenance and Protection of Traffic specification within the Rhode Island Department of Transportation Standard Specifications for Roads and Bridge Construction herein made part of these contract specifications, except as otherwise directed by the Engineer.

PART 2 - PRODUCTS

All signs, barricades, barrels, flashers, warning lights used for the maintenance and protection of traffic shall conform to the standards of the American Traffic Safety Services Association and the Rhode Island Department of Transportation Standard Specifications for Roads and Bridge Construction and details.

PART 3 - EXECUTION

The Contractor shall furnish, erect, light and maintain such signs, barricades, barrels, flashers, temporary precast concrete barrier curb, fences, ramps, temporary walkways, impact attenuation devices and warning lights as needed or directed by the Engineer, for the regulation and protection of traffic and pedestrians. Such signs, barricades, barrels, flashers, temporary precast concrete barrier curb, fences, ramps, impact attenuation devices and warning lights shall be used to safely and adequately keep pedestrians, including handicapped persons, and vehicles from equipment, materials, obstacles, excavations, and newly constructed structures. Flagmen shall be provided for the regulation and protection of traffic or pedestrians, as needed

or directed.

Remove conflicting pavement markings by method approved by the Owner or City of Pawtucket as applicable for the location of the work and restore markings to original location.

*****END OF SECTION*****

SECTION 01 56 16 - SWEEPING AND WATER FOR DUST CONTROL

PART 1 - GENERAL

1.1 RELATED DOCUMENTS

A. Drawings and General Provisions of Contract, including General and Supplementary Conditions and other Division 1 Specifications Sections, apply to this Section.

1.2 SUMMARY

A. The Contractor shall furnish a pickup sweeper, water application equipment, and accessory equipment and utilize it for the removal of earth and/or other dust producing materials from paved surfaces and from exposed earth surfaces for the purpose of allaying dust conditions during construction.

PART 2 - PRODUCTS

Water used shall be non-polluted water obtained from sources approved by the Owner.

PART 3 - EXECUTION

The Contractor shall have available and maintain in operable condition equipment capable of efficiently sweeping up earth and/or other materials from paved surfaces. This equipment shall include suitable provisions for the application of water ahead of the sweeping brooms to prevent dusting, for the pickup, internal storage and removal of sweepings, and for the cleaning of areas of heavy accumulation beyond the capacity of the sweeper.

The sweeping operations and application of water shall be under the control of the Owner at all times. Sweeping shall take place at locations and times directed by the Owner. Water shall be applied only at the locations and at such times and in the amount as may be directed by the Owner. The disposal of all sweepings shall meet with the approval of the Owner.

The Contractor shall have available and maintain in an operable condition at all times, sufficient equipment for the purpose of applying water for dust control.

Watering equipment shall consist of pipelines, tanks, tank trucks, distributors, pumps, meters, hose or other devices, approved by the Owner which are capable of applying a uniform spread of water over the surface. A suitable device for a positive shut-off and for regulating the flow of water shall be located so as to permit positive operator control.

*****END OF SECTION*****

SECTION 01 71 13 – MOBILIZATION

PART 1 – GENERAL

1.1 SUMMARY

A. This Section includes work necessary for the movement of personnel, equipment, and operating supplies to and from the project site.

1.2 INFORMATIONAL SUBMITTALS

A. Site-specific Health and Safety Plan (HASP).

1.3 COORDINATION

A. Contractor shall schedule and conduct a *Pre-construction Meeting* 10 days before Mobilization to review responsibilities and personnel assignments, at a time convenient to Architect, Owner, or their Designee.

PART 2 - PRODUCTS (Not Used)

PART 3 - EXECUTION

3.1 HEALTH AND SAFETY

A. The Contractor shall prepare a site-specific HASP in accordance with 29 CFR Part 1926 and 29 CFR Part 1910.120: Hazardous Waste Operations and Emergency Response of the Occupational Safety and Health Administration (OSHA). A copy must be maintained on-site at all times and be available for examination by the Owner and its designee.

B. The Contractor shall designate a field site Health and Safety Officer (HSO) who will be responsible for ensuring that the Contractor's employees and the Contractor comply with the HASP.

C. The Contractor is solely responsible for providing a safe work environment for its employees, agents, authorized personnel, Owner's personnel, authorized representatives, authorized consultants, visitors, and/or similar entities in accordance with all applicable federal, state and local laws and regulations during the completion of the Work. Specifically, requirements for worker protection, and safe handling and management of several categories of project site hazards must be assured for hazardous substances as defined under 40 CFR 260-270 under 29CFR 1910.120 (OSHA HAZWOPER).

D. When any support system is used that requires design by an engineer, copies of the design stamped by a Professional Engineer registered in the State of Rhode Island shall be submitted to the Architect, Owner or Owner's Designee.

E. The Contractor has full responsibility to comply with all provisions of the State of Rhode Island Public General Statutes concerning Occupational Safety and Health. Any fines levied against the Contractor for violations shall be the Contractor's responsibility.

F. Consultants, Contractors, Sub-contractors and all other workers shall follow the Owner's safety standards while working at the Project Site, including but not limited to:
   1. The Contractor shall lead a Project Activities/ Daily Safety Meeting prior to work each day.
   2. The daily safety meetings should include safety topics that are relevant to the work being conducted.
   3. The Owner shall be invited to all daily project safety briefings.
   4. A job hazard analysis (JHA) shall be prepared by Contractor daily, reviewed, and signed by consultants, contractors, sub-contractors, and all other workers. The JHA should include safety concerns that are relevant to the work being conducted.
   5. All visitors, including new employees, delivery personnel, consultants, contractors, sub-contractors and any other visitors shall review and abide by the conditions contained in the HASP.
   6. All visitors to the site must check in with the Contractor before entering the property and sign the visitor log book including date, time in, time out, name, and purpose for visit.
   7. Any Owner employee, consultant, contractor, sub-contractor and/or any other worker has the Stop Work Authority when they feel that there is the potential for a serious injury, impairment of health, adverse effect on safe operation of a process, or an adverse impact to the environment resulting from a condition or practice in the workplace.
   8. Any accident, incident or injury, including near misses must be reported to the Owner as soon as possible but no later than the same calendar day.
   9. Owner required safety documents shall be requested and obtained from the Owner.
   10. One copy of the Owner required safety documentation shall be kept on file with the Contractor. Owner-required safety documentation includes, but is not limited to, HASP, signed JHA's, and visitor log book. Another copy shall be forwarded to the Owner.

3.2 PROTECTION

A. The Contractor shall assume full responsibility for the protection of all public or private buildings, structures, and utilities in the rights-of-way, including gas pipes, water pipes, hydrants, sewers, drains, electric and telephone cables, and any other improvements whether or not they are shown on the Drawings. The Contractor shall carefully support and protect all such structures and utilities from damage of every description and any such damage thereto shall be repaired or otherwise made good by the Contractor, at their expense, in a manner acceptable to the Owner or Owner's Designee.

B. All open excavations shall be adequately safeguarded by providing temporary barricades, caution signs, lights and other means to prevent accidents to persons and damage to

property. The Contractor shall, at the Contractor's own expense, provide suitable and safe bridges and other crossings for accommodating travel by pedestrians and workmen. The length or size of excavation will be controlled by the particular surrounding conditions, but shall always be confined to the limits prescribed by the Contract Documents, Architect, Owner, or Owners Designee.

*****END OF SECTION*****

SECTION 01 73 00 – EXECUTION

PART 1 – GENERAL

1.1 SUMMARY

A. Section includes general administrative and procedural requirements governing execution of the Work including, but not limited to, the following:

1. Construction layout.
2. Field engineering and surveying.
3. Installation of the Work.
4. Cutting and patching.
5. Owner installed Work
6. Progress cleaning.
7. Starting and adjusting.
8. Protection of installed construction.

B. Related Sections:

1. Section 01 31 00 "Project Management and Coordination."
2. Section 01 40 00 "Quality Requirements."
3. Section 01 78 39 “Project Record Documents.”

1.2 QUALITY ASSURANCE

A. Land Surveyor Qualifications: As defined in Section 01 40 00 “Quality Requirements.”

B. Professional Engineer Qualifications: As defined in Section 01 40 00 “Quality Requirements.”

C. Cutting and Patching: Comply with requirements for and limitations on cutting and patching of construction elements.

1. Structural Elements: When cutting and patching structural elements, notify Architect of locations and details of cutting and await directions from Architect before proceeding. Shore, brace, and support structural elements during cutting and patching. Do not cut and patch structural elements in a manner that could change their load-carrying capacity or increase deflection.
2. Operational Elements: Do not cut and patch operating elements and related components in a manner that results in reducing their capacity to perform as intended or that results in increased maintenance or decreased operational life or safety.
3. Other Construction Elements: Do not cut and patch other construction elements or components in a manner that could change their load-carrying capacity, that results in

reducing their capacity to perform as intended, or that results in increased maintenance or decreased operational life or safety.

4. Visual Elements: Do not cut and patch construction in a manner that results in visual evidence of cutting and patching. Do not cut and patch exposed construction in a manner that would, in Architect's opinion, reduce the building's aesthetic qualities. Remove and replace construction that has been cut and patched in a visually unsatisfactory manner. Remove and replace construction that has been cut and patched in a visually unsatisfactory manner.

D. Manufacturer's Installation Instructions: Obtain and maintain on-site manufacturer's written recommendations and instructions for installation of products and equipment.

PART 2 – PRODUCTS

2.1 MATERIALS

A. General: Comply with requirements specified in other Specification Sections and Contract Documents.

B. In-Place Materials: Use materials for patching identical to in-place materials. For exposed surfaces, use materials that visually match in-place adjacent surfaces to the fullest extent possible.

1. If identical materials are unavailable or cannot be used, use materials that, when installed, will provide a match acceptable to Architect for the visual and functional performance of in-place materials.

PART 3 – EXECUTION

3.1 EXAMINATION

A. Existing Conditions: The existence and location of underground and other utilities and construction indicated as existing are not guaranteed. Before beginning site work, investigate and verify the existence and location of underground utilities and other construction affecting the Work.

1. Before construction, verify the location and invert elevation at points of connection of sanitary sewer, storm sewer, and water-service piping; underground electrical services, and other utilities.
2. Furnish location data for work related to project that must be performed by public utilities serving project site. Coordinate with authorities having jurisdiction.
3. Prior to beginning any site work, the Contractor shall complete a Ground Penetrating Radar (GPR) survey of the area inside the limits of disturbance (LOD0. The survey shall identify the location, size, and depth of subsurface utilities or obstructions. The Contractor shall provide a CAD file with the GPR survey results prior to the beginning of any site work, saw cutting, core drilling, or driving of posts. GPR survey results should be

updated to include actual conditions found during construction, and a final copy furnished to the owner in the closeout documents.

4. Before proceeding with each component of the Work, including cutting, drilling, coring, or demolition of existing walls, slabs, or roadway, the Contractor shall scan area with GPR to identify any imbedded utilities, reinforcing, structural members, or voids. A written report detailing the findings of the scan for each area shall be furnished to the Architect and Owner for review. The Contractor shall review the results with their Installer or Applicator for compliance with requirements for installation tolerances and other conditions affecting the Work. Written Report shall include:
   a. Description of the Work.
   b. Conditions found to be present from investigation work and scans.
   c. Name of entity that performed scan.
   d. Conditions found to be detrimental to execution of the Work.
   e. Pictures of area before Work showing existing conditions and markings indicating subsurface obstructions.
   f. Listed precautions for execution of work (include JHA as needed).
   g. Signoff area for Employees performing the Work. (Signoff and Work will indicate full understanding of information included in report and their compliance with any requirements outlined in the report)

5. Record observations, pictures, and measurements of actual conditions found during Work and furnish information in the final copy of the report to the owner in the closeout documents.
6. Failure to adequately perform investigative inspections, investigative scans, written reports, JHA's, and performance of the Work will result in the Contractor being financially responsible for all damages, outage costs, corrective work, fines, and schedule delays.

B. Examination and Acceptance of Conditions: Before proceeding with each component of the Work, examine substrates, areas, and conditions, with Installer or Applicator present where indicated, for compliance with requirements for installation tolerances and other conditions affecting performance. Record observations.
   1. Examine walls, floors, and roofs for suitable conditions where products and systems are to be installed.
   2. Verify compatibility with and suitability of substrates, including compatibility with existing finishes or primers.
   3. Proceed with installation only after unsatisfactory conditions have been corrected. Proceeding with the Work indicates acceptance of surfaces and conditions.

C. Field Measurements: Take field measurements as required to fit the Work properly. Recheck measurements before installing each product. Where portions of the Work are indicated to fit to other construction, verify dimensions of other construction by field measurements before fabrication. Coordinate fabrication schedule with construction progress to avoid delaying the Work.

D. Space Requirements: Verify space requirements and dimensions of items shown diagrammatically on Drawings.

E. Review of Contract Documents and Field Conditions: Immediately on discovery of the need for clarification of the Contract Documents caused by differing field conditions outside the control of Contractor, submit a request for information to Owner, or Owner's Designee, according to requirements in Section 01 31 00 "Project Management and Coordination."

3.2 CONSTRUCTION LAYOUT

A. Verification: Before proceeding to lay out the Work, verify layout information shown on Drawings, in relation to the property survey and existing benchmarks. If discrepancies are discovered, notify Architect and Owner, or Owner's Designee promptly.

B. Topography Verification: Contours shown on Drawings are approximate in some areas. Before proceeding to lay out Work, verify topography information shown on Drawings. If any discrepancies are discovered, notify Architect and Owner, or Owner's Designee promptly.

C. General: Engage a professional Land Surveyor to lay out the Work using accepted surveying practices.
   1. Establish benchmarks and control points to set lines and levels at each story of construction and elsewhere as needed to locate each element of Work.
   2. Establish the Limits of Disturbance.
   3. Establish dimensions within tolerances indicated. Do not scale Drawings to obtain required dimensions.
   4. Inform installers of lines and levels to which they must comply.
   5. Check the location, level and plumb, of every major element as the Work progresses.
   6. Notify Engineer, and Owner, or Owner's Designee, when deviations from required lines and levels exceed allowable tolerances.
   7. Close site surveys with an error of closure equal to or less than the standard established by authorities having jurisdiction.

D. Site Improvements: Locate and lay out site improvements, including pavements, grading, fill and topsoil placement, utility slopes, and rim and invert elevations.

E. Record Log: Maintain a log of layout control work. Record deviations from required lines and levels. Include beginning and ending dates and times of surveys, weather conditions, name and duty of each survey party member, and types of instruments and tapes used. Make the log available for reference by Owner, or Owner's Designee.

F. Reference Points: Locate existing permanent benchmarks, control points, and similar reference points before beginning the Work. Preserve and protect permanent benchmarks and control points during construction operations.

1. Do not change or relocate existing benchmarks or control points without prior written approval of Engineer and Owner, or Owner's Designee. Report lost or destroyed permanent benchmarks or control points promptly. Report the need to relocate permanent benchmarks or control points to Engineer and Owner, or Owner's Designee before proceeding.
2. Replace lost or destroyed permanent benchmarks and control points promptly. Base replacements on the original survey control points.

G. Benchmarks: Establish and maintain a minimum of two permanent benchmarks on Project site, referenced to data established by survey control points. Comply with authorities having jurisdiction for type and size of benchmark.
   1. Record benchmark locations, with horizontal and vertical data, on as-built documents.
   2. Where the actual location or elevation of layout points cannot be marked, provide temporary reference points sufficient to locate the Work.
   3. Remove temporary reference points when no longer needed. Restore marked construction to its original condition.

H. Final Property Survey: Provide As-Built Survey as required in Section 01 78 39 "Project Record Documents."

3.3 INSTALLATION

A. General: Locate the Work and components of the Work accurately, in correct alignment and elevation, as indicated.
   1. Make vertical work plumb and make horizontal work level.
   2. Where space is limited, install components to maximize space available for maintenance and ease of removal for replacement.

B. Comply with manufacturer's written instructions and recommendations for installing products in applications indicated.

C. Install products at the time and under conditions that will ensure the best possible results. Maintain conditions required for product performance until Substantial Completion.

D. Conduct construction operations so no part of the Work is subjected to damaging operations or loading in excess of that expected during normal conditions of occupancy.

E. Sequence the Work and allow adequate clearances to accommodate movement of construction items on site and placement in permanent locations.

F. Tools and Equipment: Do not use tools or equipment that produce harmful noise levels.

G. Templates: Obtain and distribute to the parties involved templates for work specified to be factory prepared and field installed. Check Shop Drawings of other work to confirm that adequate provisions are made for locating and installing products to comply with indicated requirements.

H. Attachment: Provide blocking and attachment plates and anchors and fasteners of adequate size and number to securely anchor each component in place, accurately located and aligned with other portions of the Work. Where size and type of attachments are not indicated, verify size and type required for load conditions.
   1. Mounting Heights: Where mounting heights are not indicated, mount components at heights directed by Architect.
   2. Allow for building movement, including thermal expansion and contraction.
   3. Coordinate installation of anchorages. Furnish setting drawings, templates, and directions for installing anchorages, including sleeves, concrete inserts, anchor bolts, and items with integral anchors, that are to be embedded in concrete or masonry. Deliver such items to Project site in time for installation.

I. Joints: Make joints of uniform width. Where joint locations in exposed work are not indicated, arrange joints for the best visual effect. Fit exposed connections together to form hairline joints.

J. Hazardous Materials: Use products, cleaners, and installation materials that are not considered hazardous.

3.4 CUTTING AND PATCHING

A. Cutting and Patching, General: Employ skilled workers to perform cutting and patching. Proceed with cutting and patching at the earliest feasible time, and complete without delay.
   1. Cut in-place construction to provide for installation of other components or performance of other construction, and subsequently patch as required to restore surfaces to their original condition.

B. Existing Warranties: Remove, replace, patch, and repair materials and surfaces cut or damaged during installation or cutting and patching operations, by methods and with materials so as not to void existing warranties.

C. Temporary Support: Provide temporary support of work to be cut.

D. Protection: Protect in-place construction during cutting and patching to prevent damage. Provide protection from adverse weather conditions for portions of Project that might be exposed during cutting and patching operations.

E. Adjacent Occupied Areas: Where interference with use of adjoining areas or interruption of free passage to adjoining areas is unavoidable, coordinate cutting and patching according to requirements in Division 01 Section "Summary."

F. Cutting: Cut in-place construction by sawing, drilling, breaking, chipping, grinding, and similar operations, including excavation, using methods least likely to damage elements

retained or adjoining construction. If possible, review proposed procedures with original Installer; comply with original Installer's written recommendations.

1. In general, use hand or small power tools designed for sawing and grinding, not hammering and chopping. Cut holes and slots neatly to minimum size required, and with minimum disturbance of adjacent surfaces. Temporarily cover openings when not in use.
2. Finished Surfaces: Cut or drill from the exposed or finished side into concealed surfaces.
3. Concrete and Masonry: Cut using a cutting machine, such as an abrasive saw or a diamond-core drill.
4. Proceed with patching after construction operations requiring cutting are complete.

G. Patching: Patch construction by filling, repairing, refinishing, closing up, and similar operations following performance of other work. Patch with durable seams that are as invisible as practicable. Provide materials and comply with installation requirements specified in other Sections, where applicable.

1. Inspection: Where feasible, test and inspect patched areas after completion to demonstrate physical integrity of installation.
2. Exposed Finishes: Restore exposed finishes of patched areas and extend finish restoration into retained adjoining construction in a manner that will minimize evidence of patching and refinishing.
3. Floors and Walls: Where walls or partitions that are removed extend one finished area into another, patch and repair floor and wall surfaces in the new space. Provide an even surface of uniform finish, color, texture, and appearance. Remove in-place floor and wall coverings and replace with new materials, if necessary, to achieve uniform color and appearance.
4. Where patching occurs in a painted surface, prepare substrate and apply primer and intermediate paint coats appropriate for substrate over the patch, and apply final paint coat over entire unbroken surface containing the patch. Provide additional coats until patch blends with adjacent surfaces.
5. Exterior Building Enclosure: Patch components in a manner that restores enclosure to a weathertight condition and ensures thermal and moisture integrity of building enclosure.

H. Cleaning: Clean areas and spaces where cutting and patching are performed. Remove paint, mortar, oils, putty, and similar materials from adjacent finished surfaces.

3.5 OWNER-INSTALLED WORK

A. Site Access: Provide access to Project site for Owner's construction personnel.

B. Coordination: Coordinate construction and operations of the Work with work performed by Owner's construction personnel.

1. Construction Schedule: Inform Owner of Contractor's preferred construction schedule for owner's portion of the Work. Adjust construction schedule based on a mutually

agreeable timetable. Notify Owner if changes to schedule are required due to differences in actual construction progress.

2. Preinstallation Conferences: Include Owner's construction personnel at preinstallation conferences covering portions of the Work that are to receive Owner's work. Attend preinstallation conferences conducted by Owner's construction personnel if portions of the Work depend on Owner's construction.

3.6 PROGRESS CLEANING

A. General: Clean Project Site and work areas daily, including common areas. Strictly enforce requirements. Dispose of materials lawfully.
   1. Comply with requirements in NFPA 241 and authorities having jurisdiction for removal of combustible waste materials and debris.
   2. Do not hold waste materials more than seven days during normal weather or three days if the temperature is expected to rise above 80 deg F.
   3. Containerize hazardous and unsanitary waste materials separately from other waste. Mark containers appropriately and dispose of legally, according to regulations. Use containers intended for holding waste materials of type to be stored.
   4. Coordinate progress cleaning for joint-use areas where Contractor and other contractors are working concurrently.

B. Site: Maintain project site free of waste materials and debris.

C. Work Areas: Clean areas where work is in progress to the level of cleanliness necessary for safe and proper execution of the Work.
   1. Remove liquid spills promptly.
   2. Where dust would impair proper execution of the Work, broom-clean or vacuum the entire work area, as appropriate.

D. Installed Work: Keep installed work clean. Clean installed surfaces according to written instructions of manufacturer or fabricator of product installed, using only cleaning materials specifically recommended. If specific cleaning materials are not recommended, use cleaning materials that are not hazardous to health or property and that will not damage exposed surfaces.

E. Concealed Spaces: Remove debris from concealed spaces before enclosing the space.

F. Exposed Surfaces in Finished Areas: Clean exposed surfaces and protect as necessary to ensure freedom from damage and deterioration at time of Substantial Completion.

G. Waste Disposal: Do not bury or burn waste materials on-site. Do not wash waste materials down sewers or into waterways. Comply with waste disposal requirements in Section 01 50 00 "Temporary Facilities and Controls."

H. During handling and installation, clean and protect construction in progress and adjoining materials already in place. Apply protective covering where required to ensure protection from damage or deterioration at Substantial Completion.

I. Clean and provide maintenance on completed construction as frequently as necessary through the remainder of the construction period. Adjust and lubricate operable components to ensure operability without damaging effects.

J. Limiting Exposures: Supervise construction operations to assure that no part of the construction, completed or in progress, is subject to harmful, dangerous, damaging, or otherwise deleterious exposure during the construction period.

3.5 STARTING AND ADJUSTING

A. Start equipment and operating components to confirm proper operation. Remove malfunctioning units, replace with new units, and retest.

B. Adjust equipment for proper operation. Adjust operating components for proper operation without binding.

C. Test each piece of equipment to verify proper operation. Test and adjust controls and safeties. Replace damaged and malfunctioning controls and equipment.

D. Manufacturer's Field Service: Comply with qualification requirements in Section 01 40 00 "Quality Requirements."

3.6 PROTECTION OF INSTALLED CONSTRUCTION

A. Provide final protection and maintain conditions that ensure installed Work is without damage or deterioration at time of Substantial Completion.

B. Comply with manufacturer's written instructions for temperature and relative humidity.

*****END OF SECTION*****

SECTION 01 77 00 - CLOSEOUT PROCEDURES

PART 1 - GENERAL

1.1 SUMMARY

A. Section includes administrative and procedural requirements for contract closeout, including, but not limited to, the following:
   1. Substantial Completion procedures.
   2. Final completion procedures.
   3. Warranties.
   4. Final cleaning.
   5. Repair of the Work.

B. Related Sections:
   1. Section 01 31 00 “Project Management and Coordination”
   2. Section 01 78 39 “Project Record Documents.”

1.2 SUBMITTALS

A. Contractor's List of Incomplete Items (contractors punch list)

B. Certificates of Occupancy: From authorities having jurisdiction

C. Log of Maintenance Material Items turned over to owner as specified in other Sections.

D. List of Warranties that will begin upon Substantial Completion.

E. Project closeout binder

F. Project as-builts

1.3 SUBSTANTIAL COMPLETION PROCEDURES

A. General: Substantial Completion occurs when the project, or a portion of the project, is fit for its intended use and the Owner can occupy and use the property.

B. Substantial Completion Procedure:
   1. Hold *Project Closeout Conference* per Section 01 31 00
   2. Submit Contractor's List of Incomplete Items (Contractors Punch list)
   3. Request and schedule Punch List Walkthrough with Architect and Owner.
   4. Architect and Owner will inspect the Work with the Contractor and generate a list of additional items to be added to the Contractors Punch List.
   5. Architect or Owner will prepare the Certificate of Substantial Completion after inspection or will notify Contractor of items, either on Contractor's list or additional items identified by Architect or Owner, that must be completed or corrected before certificate of Substantial completion will be issued.

a. Reinspection: Request reinspection when all the specific Work items identified for Substantial Completion in the previous inspection are completed or corrected.
b. Architect or Owner will prepare the Certificate of Substantial Completion after re-inspection or will notify Contractor of remaining items that must be completed or corrected.
c. Contractor will be responsible for the cost of any subsequent re-inspections for Certificate of Substantial Completion. Costs will be based on the hourly rates in the contract between Owner and Architect. Owner will issue Contractor a deduct change order for associated costs.

C. *Contractor's List of Incomplete Items:* Prepare and submit a list of items to be completed. Include any listed items below that are incomplete at time of request for Punch List Walkthrough with Architect and Owner:
1. Closeout submittals specified in other Division 01 Sections, including project record documents, operation and maintenance manuals, final completion construction photographic documentation, damage or settlement surveys, property surveys, and similar final record information.
2. Closeout submittals specified in individual Sections, including specific warranties, workmanship bonds, maintenance service agreements, final certifications, and similar documents.
3. Turnover of maintenance materials as specified in individual Sections, including tools, spare parts, extra materials, and similar items, and deliver to location designated by Owner or Architect. Label with manufacturer's name and model number where applicable.
4. Make final changeover of permanent locks and deliver keys to Owner.
5. Perform preventive maintenance on equipment used prior to Substantial Completion and submit records.
6. Advise Owner of changeover in control for heat and other utilities.
7. Terminate and remove temporary facilities from Project site, along with mockups,
8. construction tools, and similar elements
9. Complete startup testing of systems.
10. Submit test/adjust/balance records.
11. Touch up and otherwise repair and restore marred exposed finishes to eliminate visual defects.
12. Final cleaning requirements.
13. Inspections and Certifications.

Contractor's List of Incomplete Items shall identify each space and area affected by construction operations for incomplete items and items needing correction including, if necessary, areas disturbed by Contractor that are outside the limits of construction.
1. Include the following information at the top of each page:
   a) Project name.
   b) Date
   c) Name of Owner.

d) Name of Engineer.
e) Name of Contractor.
f) Page number

2. Include the following information, or space for information, for each Item:
   a) Item Location (Physical location on site, Submittal Number, or Closeout Book)
   b) Photos
   c) Item Description
   d) Responsible Entity
   e) Date Item was added
   f) Scheduled Completion Date
   g) Completion Date
   h) Architect or Owner sign-off of acceptance
   i) Comments
3. Submit list of incomplete items in the following format:
   a) One PDF electronic file.
   b) One electronic Microsoft Excel file (for Owners use in preparing Punch List)

D. *Request and Schedule a Punch List Walkthrough*: Submit written request to the Owner and Owner's Designee 10 days prior to the work being Substantially Complete and ready for a Punch List Walkthrough. The Contractor's List of Incomplete Items shall be submitted with the written request.

E. *Punch List Walkthrough:* The Owner, Owner's Designee, Engineer, Architect, and Contractor shall perform a joint walkthrough of the completed Work to determine Substantial Completion and identify Work scope that remains to be completed or corrected.
   1. After the walkthrough, the Architect or Owner, will issue a list documenting Work that needs to be addressed for Project Completion. Contractor shall compile Contractor's List of Incomplete Items with the Architect or Owner's list.

   2. Architect or owner will prepare the Certificate of Substantial Completion (AIA G704 - 2017 Certificate of Substantial Completion) after inspection or will notify Contractor of specific Punch List items identified by the Owner, or Owner's Designee, that must be completed or corrected before certificate will be issued.

   3. Re-inspection: Request re-inspection when all the specific Work items identified for Substantial Completion in the previous inspection are completed or corrected.
      a. Architect or Owner will prepare the Certificate of Substantial Completion after re-inspection or will notify Contractor of remaining items that must be completed or corrected.
      b. Contractor will be responsible for the cost of any subsequent re-inspections for Certificate of Substantial Completion. Costs will be based on the hourly rates in the contract between Owner and Architect. Owner will issue Contractor a deduct change order for associated costs.

1.4 FINAL COMPLETION PROCEDURES

A. General: Final Completion shall be met **15 days** after Substantial Completion.

B. Final Completion Procedure:
   1. Complete all Punch List Items
   2. Submit all required documentation.
   3. Submit written request for inspection.
   4. Final Inspection and Owner Signoff

C. Submittals For Final Completion: Complete the following:
   1. Submit a written request for final inspection.
   2. Submit List of Warranties that will begin upon Final Completion.
   3. Submit a certified copy of the Contractor's Punch List, endorsed and dated by Architect and Owner indicating that each item has been completed or otherwise resolved for acceptance.
   4. Certificate of Insurance: Submit evidence of final, continuing insurance coverage complying with insurance requirements.
   5. Submit pest-control final inspection report.
   6. Proof Contractor has trained or instructed Owner's personnel in operation, adjustment, and maintenance of products equipment, and systems.
   7. Proof all fuel tanks, propane tanks, etc. have been filled.

D. Inspection: Submit a written request for final inspection to determine acceptance a minimum of 5 days prior to date the work will be completed and ready for final inspection and tests. On receipt of request, Architect, Owner or Owner's Designee will either proceed with inspection or notify Contractor of unfulfilled requirements. After inspection, the Architect Owner or Owner's Designee will endorse and date the Punch List indicating that each item has been completed or otherwise resolved for acceptance.
   1. Re-inspection: Request re-inspection when the Work identified in previous inspections as incomplete is completed or corrected.

PART 2 - PRODUCTS (Not Used)

PART 3 – EXECUTION

3.1 FINAL CLEANING

A. General: Perform final cleaning. Conduct cleaning and waste-removal operations to comply with local laws and ordinances and Federal and local environmental and anti-pollution regulations.

B. Cleaning: Employ experienced workers or professional cleaners for final cleaning. Comply with manufacturer's written instructions.

1. Complete the following cleaning operations before requesting inspection for certification of Substantial Completion for entire project or for a designated portion of the project:
   a. Clean Project Site, yard, and grounds, in areas disturbed by construction activities, including landscape development areas, of rubbish, waste material, litter, and other foreign substances.
   b. Sweep paved areas broom clean. Remove petrochemical spills, stains, and other foreign deposits.
   c. Rake grounds that are neither planted nor paved to a smooth, even-textured surface.
   d. Remove tools, construction equipment, machinery, and surplus material from Project site.
   e. Remove snow and ice to provide safe access to building.
   f. Clean exposed exterior and interior hard-surfaced finishes to a dirt-free condition, free of stains, films, and similar foreign substances. Avoid disturbing natural weathering of exterior surfaces. Restore reflective surfaces to their original condition.
   g. Remove debris and surface dust from limited access spaces, including roofs, plenums, shafts, trenches, equipment vaults, manholes, attics, and similar spaces.
   h. Sweep concrete floors broom clean in all spaces.
   i. Clean transparent materials, including mirrors and glass in doors and windows. Remove glazing compounds and other noticeable, vision-obscuring materials. Replace chipped or broken glass and other damaged transparent materials. Polish mirrors and glass, taking care not to scratch surfaces.
   j. Remove labels that are not permanent.
   i. Do not paint over "UL" and similar labels, including mechanical and electrical nameplates.
   k. Touch up and otherwise repair and restore marred, exposed finishes and surfaces. Replace finishes and surfaces that cannot be satisfactorily repaired or restored or that already show evidence of repair or restoration.
   l. Wipe surfaces of mechanical and electrical equipment, elevator equipment, and similar equipment. Remove excess lubrication, paint and mortar droppings, and other foreign substances.
   m. Replace parts subject to unusual operating conditions.
   n. Clean plumbing fixtures to a sanitary condition, free of stains, including stains resulting from water exposure.
   o. Replace disposable air filters and clean permanent air filters. Clean exposed surfaces of diffusers, registers, and grills.
   p. Clean ducts, blowers, and coils if units were operated without filters during construction.
   q. Clean light fixtures, lamps, globes, and reflectors to function with full efficiency. Replace burned-out bulbs, and those noticeably dimmed by hours of use, and defective and noisy starters in fluorescent and mercury vapor fixtures to comply with requirements for new fixtures.

r. Leave Project clean and ready for occupancy.
s. Comply with safety standards for cleaning. Do not burn waste materials. Do not bury debris or excess materials on Owner's property. Do not discharge volatile, harmful, or dangerous materials into drainage systems. Remove waste materials from Project site and dispose of lawfully.

3.2 REPAIR OF THE WORK

A. Complete repair and restoration operations before requesting inspection for determination of Final Completion.

*****END OF SECTION*****

SECTION 01 78 39 - PROJECT RECORD DOCUMENTS

PART 1 - GENERAL

1.1 Summary

A. Section includes administrative and procedural requirements for project record documents, including the following:
   1. As-Built Survey
   2. Record Specifications
   3. Record Product Data
   4. Record submittals
   5. Operation and Maintenance Data
   6. Warranties
   7. Closeout Book

B. Related Sections:
   1. Section 01 40 00 “Quality Requirements”
   2. Section 01 77 00 "Closeout Procedures"
   3. Section 01 91 13 “General Commissioning Requirements”

1.2 Closeout Submittals

A. Submit one set of marked-up Record Prints.
   1. Include all pages of the Project Drawings for a complete set.
   2. Submit copies of Record Drawings as follows:
      a. Initial Submittal: Submit one set of plots from corrected Record CAD Drawings and one set of marked-up Record Prints. Architect will initial and date each plot and mark whether general scope of changes, additional information recorded, and quality of drafting are acceptable. Architect will return plots and prints for organizing into sets, printing, binding, and final submittal.
      b. Final Submittal: Submit one set of marked-up Record Prints, one set of Record CAD Drawing files, one set of Record CAD Drawing plots, and three copies printed from record plots. Plot and print each Drawing, whether or not changes and additional information were recorded.

B. Record Specifications: Submit one copy of Project's Specifications, including addenda and contract modifications.

C. Record Product Data: Submit one copy of each Product Data submittal.
   1. Where Record Product Data is required as part of operation and maintenance manuals, submit marked-up Product Data as an insert in the manual instead of submittal as Record Product Data.

D. Record Submittals: See other Specification Sections for miscellaneous record-keeping

requirements and submittals in connection with various construction activities. Submit an annotated PDF electronic file of each submittal.

E. Operation and Maintenance Data:

1. Submit two copies of preliminary draft or proposed formats and outlines of contents before start of Work. Design Agent will review draft and return one copy with comments.
2. For equipment, or component parts of equipment put into service during construction and operated by Owner, submit completed documents within ten days after acceptance.
3. Submit one copy of completed documents 15 days prior to final inspection. This copy will be reviewed and returned after final inspection, with Design Agent comments. Revise content of all document sets as required prior to final submission.
4. Submit two sets of revised final documents in final form within 10 days after final inspection.

F. Warranties:
1. For equipment or component parts of equipment put into service during construction with Owner's permission, submit documents within 10 days after acceptance.
2. Make other submittals within 10 days after Date of Substantial Completion, prior to final Application for Payment.
3. For items of Work for which acceptance is delayed beyond Date of Substantial Completion, submit within 10 days after acceptance, listing the date of acceptance as the beginning of the warranty period.

PART 2 - PRODUCTS

2.1 Record Drawings

A. Record Prints: Maintain one set of blue- or black-line white prints of the Contract Drawings and Shop Drawings.
1. Preparation: Mark Record Prints to show the actual installation where installation varies from that shown originally. Require individual or entity who obtained record data, whether individual or entity is Installer, subcontractor, or similar entity, to prepare the marked-up Record Prints.
    a. Give particular attention to information on concealed elements that would be difficult to identify or measure and record later.
    b. Accurately record information in an understandable drawing technique.
    c. Record data as soon as possible after obtaining it. Record and check the markup before enclosing concealed installations.
2. Content: Types of items requiring marking include, but are not limited to, the following:
    a. Dimensional changes to Drawings.

b. Revisions to details shown on Drawings.
c. Depths of foundations below first floor.
d. Locations and depths of underground utilities.
e. Revisions to routing of piping and conduits.
f. Revisions to electrical circuitry.
g. Actual equipment locations.
h. Duct size and routing.
i. Locations of concealed internal utilities.
j. Changes made by Change Order or Construction Change Directive.
k. Changes made following Architect's written orders.
l. Details not on the original Contract Drawings.
m. Field records for variable and concealed conditions.
n. Record information on the Work that is shown only schematically.

3. Mark the Contract Drawings or Shop Drawings, whichever is most capable of showing actual physical conditions, completely and accurately. If Shop Drawings are marked, show cross-reference on the Contract Drawings.
4. Mark record sets with erasable, red-colored pencil. Use other colors to distinguish between changes for different categories of the Work at same location.
5. Mark important additional information that was either shown schematically or omitted from original Drawings.
6. Note Construction Change Directive numbers, alternate numbers, Change Order numbers, and similar identification, where applicable.
7. Incorporate changes and additional information previously marked on Record Prints. Erase, redraw, and add details and notations where applicable.
8. Refer instances of uncertainty to Architect for resolution.
9. Owner will furnish Contractor one set of transparencies of the Contract Drawings for use in recording information.
10. Print the Contract Drawings and Shop Drawings for use as Record Transparencies. Architect will make the Contract Drawings available to Contractor's print shop.

B. Record CAD Drawings: Immediately before inspection for Certificate of Substantial Completion, review marked-up Record Prints with Architect. When authorized, prepare a full set of corrected CAD Drawings of the Contract Drawings, as follows:
   1. Format: Same CAD program, version, and operating system as the original Contract Drawings.
   2. Format: DWG, Version 2004, operating in Microsoft Windows operating system.
   3. Incorporate changes and additional information previously marked on Record Prints. Delete, redraw, and add details and notations where applicable.
   4. Refer instances of uncertainty to Architect for resolution.
   5. Architect will furnish Contractor one set of CAD Drawings of the Contract Drawings for use in recording information.
      a. Architect makes no representations as to the accuracy or completeness of CAD Drawings as they relate to the Contract Drawings.
      b. CAD Software Program: The Contract Drawings are available in AutoCad 2004 -

2008.

C. Newly Prepared Record Drawings: Prepare new Drawings instead of preparing Record Drawings where Architect determines that neither the original Contract Drawings nor Shop Drawings are suitable to show actual installation.
   1. New Drawings may be required when a Change Order is issued as a result of accepting an alternate, substitution, or other modification.
   2. Consult Architect for proper scale and scope of detailing and notations required to record the actual physical installation and its relation to other construction. Integrate newly prepared Record Drawings into Record Drawing sets; comply with procedures for formatting, organizing, copying, binding, and submitting.

D. Format: Identify and date each Record Drawing; include the designation "PROJECT RECORD DRAWING" in a prominent location.
   1. Record Prints: Organize Record Prints and newly prepared Record Drawings into manageable sets. Bind each set with durable paper cover sheets. Include identification on cover sheets.
   2. Record Transparencies: Organize into unbound sets matching Record Prints. Place transparencies in durable tube-type drawing containers with end caps. Mark end cap of each container with identification. If container does not include a complete set, identify Drawings included.
   3. Record CAD Drawings: Organize CAD information into separate electronic files that correspond to each sheet of the Contract Drawings. Name each file with the sheet identification. Include identification in each CAD file.
   4. Identification: As follows:
      a. Project name.
      b. Date.
      c. Designation "PROJECT RECORD DRAWINGS."
      d. Name of Architect.
      e. Name of Contractor.

2.2 Record Specifications

A. Preparation: Mark Specifications to indicate the actual product installation where installation varies from that indicated in Specifications, addenda, and contract modifications.
   1. Give particular attention to information on concealed products and installations that cannot be readily identified and recorded later.
   2. Mark copy with the proprietary name and model number of products, materials, and equipment furnished, including substitutions and product options selected.
   3. Record the name of manufacturer, supplier, Installer, and other information necessary to provide a record of selections made.
   4. For each principal product, indicate whether record Product Data has been submitted in operation and maintenance manuals instead of submitted as record Product Data.
   5. Note related Change Orders and record Drawings where applicable.
   6. Format: Submit record Specifications as annotated PDF electronic file and paper copy

of Specifications.

2.3 Record Product Data

A. Preparation: Mark Product Data to indicate the actual product installation where installation varies substantially from that indicated in Product Data submittal.
   1. Give particular attention to information on concealed products and installations that cannot be readily identified and recorded later.
   2. Include significant changes in the product delivered to Project Site and changes in manufacturer's written instructions for installation.
   3. Note related Change Orders and record Drawings where applicable.

B. Format: Submit record Product Data as annotated PDF electronic file and paper copy of Product Data.
   1. Include record Product Data directory organized by Specification Section number and title, electronically linked to each item of record Product Data.

2.4 Maintenance Data

A. For Each Product or System: List names, addresses and telephone numbers of Subcontractors and suppliers, including local source of supplies and replacement parts.

B. Product Data: Mark each sheet to clearly identify specific products and component parts, and data applicable to installation. Delete inapplicable information.

2.5 MAINTENANCE MANUALS

A. Prepare data in the form of an owner's manual.

B. Binder: Commercial quality, 8-1/2 by 11 inch three D side ring binders with durable plastic covers; 2 inch maximum ring size.

C. Contents: Prepare a Table of Contents for each volume, with each product or system description identified, in three parts as follows:

1. Part 1: Directory, listing names, addresses, and telephone numbers of Design Agent, Contractor, Subcontractors, and major equipment suppliers.

2. Part 2: Maintenance instructions, arranged by system and subdivided by specification section. For each category, identify names, addresses, and telephone numbers of Subcontractors and suppliers. Identify the following:

a. Maintenance instructions for special finishes, including recommended cleaning methods and materials, and special precautions identifying detrimental agents.

3. Part 3: Project documents and certificates, including the following:

a. Shop drawings and product data.

b. Photocopies of warranties and bonds.

2.6 WARRANTIES

A. Warranty period shall commence at date of substantial completion.

B. Obtain warranties and bonds, executed in duplicate by responsible Subcontractors, suppliers, and manufacturers, within 10 days after completion of the applicable item of work. Except for items put into use with Owner's permission, leave date of beginning of time of warranty until the Date of Substantial completion is determined.

C. Verify that documents are in proper form, contain full information, and are notarized.

D. Co-execute submittals when required.

E. Retain warranties and bonds until time specified for submittal.

F. Include originals of each in operation and maintenance manuals, indexed separately on Table of Contents.

2.7 Miscellaneous Record Submittals

A. Assemble miscellaneous records required by other Specification Sections for miscellaneous record keeping and submittal in connection with actual performance of the Work. Bind or file miscellaneous records and identify each, ready for continued use and reference.

B. Format: Submit miscellaneous record submittals as annotated PDF electronic file and paper copy miscellaneous record submittals.
   1. Include miscellaneous record submittals directory organized by Specification Section number and title, electronically linked to each item of miscellaneous record submittals.

PART 3 - EXECUTION

3.1 Recording and Maintenance

A. Maintain at job site, one copy of:
   1. Contract Drawings.
   2. Specifications.
   3. Addenda.
   4. Reviewed Shop Drawings.
   5. Approved Submittals
   6. Record Drawings.
   7. Change Orders
   8. Requests for Information
   9. Other modifications to Contract.
   10. Field Test Reports.
   11. Approved materials, samples, mockups and colors.

C. Maintain documents in clean, dry, legible condition.

D. Do not use record documents for construction purposes.

E. Make documents available at all times for inspection by Architect and Owner

F. Recording: Maintain one copy of each submittal during the construction period for project record document purposes. Post changes and revisions to project record documents as they

occur; do not wait until end of project.

G. Maintenance of Record Documents and Samples: Store record documents and Samples in the office apart from the Contract Documents used for construction. Do not use project record documents for construction purposes. Maintain record documents in good order and in a clean, dry, legible condition, protected from deterioration and loss. Provide access to project record documents for Owner or Owner's Designee reference during normal working hours.

H. Recording changes:
1. Keep record documents current.
2. Do not permanently conceal any work until required information has been recorded.
3. Contract Drawings: Legibly mark to record actual construction and the following:
a. Record various elements of foundations in relation to lowest floor elevation.
4. Reference horizontal and vertical location of underground utilities and appurtenances to permanent surface improvements.
c. Reference location of internal utilities and appurtenances concealed in construction to visible and accessible features of structure.
d. Record field changes of dimensions and details.
e. Record changes made by Change Order or Field Order.
f. Record details not on original Contract Drawings.

I. Specifications and Addenda: Legibly mark up each Section to record the following:
1. Manufacturer, trade name, catalog number, and supplier of each product and item of equipment actually installed.
2. Changes made by Change Order and Field Order.
3. Other matters and materials not previously specified.
4. Shop Drawings: Maintain shop drawing record documents and legibly annotate drawings to record changes after review.

*****END OF SECTION*****

SECTION 01 91 13 - GENERAL COMMISSIONING REQUIREMENTS

PART 1 - GENERAL

1.1 SECTION INCLUDES

A. This section presents general commissioning requirements for the Pawtucket Central Falls New Passenger Facilities Building project to be met in addition to specific commissioning requirements for work on the commissioned systems in Divisions 22 and 23.

B. The Owner requires participation in comprehensive commissioning of selected systems, assemblies, and components. This section includes general requirements that apply to all commissioned systems, assemblies, or components. Additional specific requirements are found in Divisions 22 and 23. Systems and components to be commissioned on this project are listed in Paragraph 1.6 below.

C. This section includes the following Appendices:

"Appendix A" – Sample Training Agenda

"Appendix B" – Sample Commissioning Checklists

"Appendix C" – Sample Commissioning Test Procedures

"Appendix D" – Sample Component Commissioning Schedule

D. All requirements on drawings and in the general provisions of the Contract, including but not limited to the Agreement and General Conditions, apply to this Section.

1.2 RELATED COMMISSIONING SECTIONS

A. Section 22 08 00 Commissioning of Plumbing

B. Section 23 08 00 Commissioning of HVAC

1.3 ABBREVIATIONS AND DEFINITIONS

A. BOD: Basis of Design. A document that records concepts, calculations, decisions, operational performance criteria and product selections used to meet the OPR and to satisfy applicable regulatory requirements, standards, and guidelines. The document includes both narrative descriptions and lists of specific items required to meet the Owner's Project Requirements.

B. Commissioning Authority: The reviewing entity employed directly by the Owner to verify that the Owner's Project Requirements are met, and to assist the Owner by providing quality improvement services.

C. Commissioning Issues Log: The primary document for recording and communicating issues identified through the commissioning process.

D. Design Professional: The design professional or professionals of record responsible for sealing the construction documents, permit applications and for consultations with the authority having jurisdiction at various stages of plan review and construction. They are referred to separately when they perform distinct functions with respect to commissioning, such as considering commissioning comments during formal review of product data and other submittals.

E. FPT: Functional Performance Testing, including testing of individual components, entire systems, and intersystem performance.

F. O&M: Operations and Maintenance.

G. OPR: Owner's Project Requirements. A document that details the functional requirements of a project and the expectations of how it will be used and operated. These include Project goals, measurable performance criteria, cost considerations, benchmarks, success criteria, and supporting information. The commissioning process verifies and documents whether the final built commissioned systems in the project meet the OPR.

H. PFC: Pre-Functional Checklists developed by Stephen Turner Inc. for completion by Trade Contractors.

I. Submittals: Documents required by the contract documents including product data and other formal submittals.

J. Systems, Subsystems, Equipment, and Components: Where these terms are used together or separately, they shall mean "as-built" systems, subsystems, equipment, and components.

K. Systems Checklists: Checklists developed and completed by Stephen Turner Inc.

L. TAB: Test, Adjust and Balance.

1.4 COMMISSIONING PROCESS

A. For this project, Stephen Turner Inc. is the commissioning authority contracted directly by the Owner to lead the commissioning process. The design team, construction manager, and contractors, along with the Owner (Project Manager, Users, and Operations), form the commissioning team.

B. The commissioning process, including Functional Performance Tests, is separate from and does not reduce or replace the requirements of the formal acceptance process by the Owner and Design Professional or the requirements of the authorities having jurisdiction. Stephen Turner Inc. will accept documented testing performed as part of the formal acceptance process that is witnessed by the Owner, Design Professional or the authorities having jurisdiction in order to avoid duplicate testing where possible.

C. Sampling

1. Generally, representative samples of the work will be periodically verified by Stephen Turner Inc. as an indicator of the quality of the work.

2. This sampling method will be used as a quality check for equipment, piping, redline or record drawings, etc. The intent is that commissioning verification occurs when each aspect of commissioned work first begins, so that any resulting changes required are made after only a small portion of the work is put in place, not all of it.

D. Problem Solving

1. Stephen Turner Inc. will suggest solutions to issues but does not assume the burden of responsibility to solve and correct issues that are found.

E. Communication During Construction Phase

1. Coordination of Trade Contractor participation in the commissioning team is through the Construction Manager. Comments, observations, etc. resulting from commissioning activities will be recorded in the Commissioning Issues Log and relayed directly to the responsible party whenever possible, with copies to the Owner, Design Professional and Construction Manager, as applicable. This includes submittal comments, site observation reports, test reports, etc. This direct communication approach is intended to avoid delays from traditional remote paper exchanges, will encourage dialogue and discussion of options and alternatives, and generally maintain an atmosphere of cooperation and quality.
2. Stephen Turner Inc. is not responsible for design concept, design criteria, compliance with codes, design or general construction scheduling, cost estimating, or construction management.
3. Stephen Turner Inc. may assist with problem solving, non-conformance or deficiencies, but ultimately that responsibility resides with the construction manager.
4. The primary role of Stephen Turner Inc. is to develop and coordinate the execution of the commissioning plan including testing, to observe and document performance, and to document whether systems are functioning in accordance with the documented Owner's Project Requirements.
5. Stephen Turner Inc. does not direct or redirect the Construction Manager or the Trade Contractors in their contracted work, and no communication shall be construed as such direction.
6. Stephen Turner Inc. is not authorized to:
   a. Release, revoke, alter or expand requirements of Contract Documents.
   b. Approve or accept any portion of the work.
   c. Perform any duties of the Construction Manager, its consultants, or its contractors.

F. Response Times

1. Timeliness in delivering information or forming responses to Stephen Turner Inc., and back, are essential to providing the built project to the Owner on time, as well as to implementing commissioning.
2. The following are guidelines established to meet this objective and should be followed unless there are extenuating circumstances – in which case the delay shall be explained to each party in advance of the delay. Failure to avoid delays means that the delayed

work product may not be incorporated into the commissioning reporting process, requiring a separate resolution process with the Owner without commissioning assistance.

a. Construction schedule by the Construction Manager incorporating separate activities for commissioning activities, as a minimum including pre-functional checklists, equipment start-ups, controls completion, TAB, and functional performance testing.
    1) Within 10 business days after award of Division 22 and 23 work.
    2) Appendix C shows a typical component-level commissioning schedule by Stephen Turner Inc. with the dependencies between construction activities and commissioning activities.
b. Project-specific comments from Stephen Turner Inc. on how commissioning activities and dates are incorporated into the schedule:
    1) Within 10 business days after receiving component schedule for Division 22 and 23 work and updates throughout project.
c. Submittal comments by Stephen Turner Inc.:
    1) 7 business days from date of receipt by Stephen Turner Inc. for typical product submittals; 15 business days for Controls, TAB, energy recovery equipment, and other selected complex submittal packages. Stephen Turner Inc. will identify other selected complex submittal packages in advance if provided with the submittal register.
    2) For this paragraph's purposes, "receive" means electronic or hard copy in the hands of Stephen Turner Inc.
d. Approved submittals to Stephen Turner Inc.:
    1) Within 5 business days of receipt by construction manager.
e. Delivery of draft O&M manuals for Stephen Turner Inc. to review:
    1) 30 business days after approved submittals.
f. Delivery of final O&M manuals and training materials to Stephen Turner Inc.:
    1) 10 business days prior to each scheduled owner training session.
g. Delivery of record drawings marked to as-built conditions to Stephen Turner Inc.:
    1) Prior to each scheduled training session.
h. Delivery of final as-built drawings to Stephen Turner Inc.:
    1) Within 20 business days of start of warranty period(s).
i. Commissioning Issues Log entries by Stephen Turner Inc.:
    1) Within 5 business days after observation.
j. Response by Construction Manager and Trade Contractor to commissioning Issues Log entries and field comments:
    1) 5 business days after receipt of Issues Log where other parties are not involved, or at the next commissioning meeting.

k. Delivery of functional performance testing procedures by Stephen Turner Inc. to Construction Manager:

1) 20 business days before scheduled testing provided that schedule and draft O&M manuals have been provided to Stephen Turner Inc. at least 40 business days in advance of scheduled testing.

1.5 CONSTRUCTION MANAGER AND TRADE CONTRACTOR REQUIREMENTS

A. Construction Manager

1. The Construction Manager's responsibility for construction safety is unaffected by this section.
2. The Construction Manager's responsibility for the quality of the installed work is unaffected by this section.
3. The Construction Manager shall establish at least one contact person, plus alternates where appropriate, for each trade or system involved in the commissioning process. This requirement facilitates effective communication during commissioning.
4. The Construction Manager shall communicate to the commissioning team the construction schedules, milestones, completion schedules, planned testing, etc., including updates. The Construction Manager shall incorporate commissioning activities closely tied to the construction activities into the project schedule as agreed by the Construction Manager, the Owner, and Stephen Turner Inc.
5. Stephen Turner Inc. has no authority to change the contract or direct the Construction Manager in any of their work, only to provide comments and suggestions. Any issues that Stephen Turner Inc. identifies that cannot be resolved with the Construction Manager and the Trade Contractors will be jointly presented to the Owner for resolution.
6. As each commissioning issue is identified, the Construction Manager shall consider it with the Trade Contractors and respond to Stephen Turner Inc. The Construction Manager shall cooperate in resolving commissioning issues that are within the project scope.
7. The Construction Manager shall ensure that each required Trade Contractor and direct Supplier participates and cooperates in commissioning, and provides information, assistance, and responses within the time frames in this section.
8. The Construction Manager shall ensure that each required trade supports integrated testing and commissioning of inter-related work.
9. Warranty
   a. The Construction Manager shall provide a summary of warranty items as specified, delineated by specification section number, title, and description. Stephen Turner Inc. will use this as part of the commissioning comparison and verification of warranty items. This step is intended to assure the Owner that the intended warranty protection will be provided.
   b. For each warranty item, include the date when the warranty is to begin, the duration of the warranty, and Owner's obligations to maintain to protect warranty.
10. The Construction Manager shall schedule in advance and coordinate execution of seasonal or deferred commissioning testing by the Trade Contractors, which shall be

witnessed by Stephen Turner Inc. The Construction Manager and the Trade Contractors shall correct deficiencies and make necessary adjustments to O&M manuals and as-built drawings for applicable issues identified in seasonal testing.

B. Trade Contractors

1. The Trade Contractors' responsibility for construction safety in their work is unaffected by this section.
2. The Trade Contractors' responsibility for the quality of their installed work is unaffected by this section.
3. The Trade Contractors for commissioned systems and related work will be required to perform certain tasks to assist in the commissioning process. These tasks are described in this section and the commissioning section of each Division that includes commissioned systems. Sample documents relating to these tasks are included in the appendix section of this specification to further clarify this work.
4. The responsibility for safe operation of components, equipment, and systems during commissioning testing rests with the Trade Contractors.
5. Stephen Turner Inc. has no authority to change the contract or direct the Trade Contractors in any of their work, only to provide comments and suggestions. Any issues that Stephen Turner Inc. cannot resolve with the Construction Manager and the Trade Contractors will be jointly presented to the Owner for resolution.
6. As each commissioning issue is identified, the Trade Contractors shall, with the Construction Manager, consider the issue and respond to Stephen Turner Inc. Trade Contractors shall cooperate in the resolution of commissioning issues that are within their contracted scope.
7. FPT procedures will be developed and led by Stephen Turner Inc. and performed by the Trade Contractors on each commissioned system.
8. Inter-related work is subject to integrated inter-system functional performance testing and participation of each related trade is required. This includes seasonal performance testing.

1.6 INCLUDED SYSTEMS

A. For the following tables listing systems and their components by Division, Stephen Turner Inc. will develop Functional Performance Tests (FPT) that are executed by the Trade Contractors with Stephen Turner Inc. The installing contractors must complete Pre-Functional Checklists developed by Stephen Turner Inc. for components and systems listed; no sampling is allowed. Installing contractors are required to participate in all Functional Performance Testing.

Building Systems to be Commissioned	Pre-Functional Checklists	Functional Performance Testing
HVAC Systems and Associated Controls		
Air Handling Unit(s)	Yes	100%

Building Systems to be Commissioned	Pre-Functional Checklists	Functional Performance Testing
Pumps	Yes	100%
Exhaust Fans	Yes	100%
Unit Heaters	Yes	100%
Ductless AC Units	Yes	100%
Electrical Systems		
Lighting and Lighting Controls	Yes	100%
Connections to Equipment Listed in Section 019113	Yes	Support
Plumbing Systems		
Domestic Hot Water	Yes	100%

PART 2 – PRODUCTS

2.1 TEST EQUIPMENT

A. Standard testing equipment required to perform startup, initial checkout, and required testing shall be provided by the Contractor, and shall remain the property of the Contractor.

B. System-specific test equipment, tools and instruments (e.g. test equipment specific to a piece of equipment) required shall be included in the base bid price by the Contractor.

C. Equipment and software provided by Stephen Turner Inc. to test equipment shall not become the property of the Owner.

D. Testing equipment shall be of sufficient quality and accuracy to measure system performance with the tolerances listed in the system or product specifications.

E. Calibration tags shall be affixed or certificates readily available. Equipment shall be calibrated according to the manufacturer's recommended intervals, recalibrated when dropped, and repaired and recalibrated when damaged.

PART 3 - EXECUTION

3.1 COMMISSIONING TEAM

A. The Construction Manager and each Trade Contractor performing work on commissioned systems or equipment shall designate personnel to the commissioning team. Such personnel, including knowledgeable sub-contractors or equipment suppliers, shall be responsible for coordinating commissioning activities with Stephen Turner Inc. and attending meetings.

3.2 COMMISSIONING TEAM RESPONSIBILITIES

A. The Commissioning Personnel for the Construction Manager and each Trade Contractor and equipment supplier for commissioned systems or equipment shall have expertise and authority to act on their firm's behalf and shall be scheduled to participate in and perform commissioning activities including, but not limited to:

1. Cooperate with Stephen Turner Inc. for resolution of issues recorded in the Issues Log.
2. Attend commissioning team meetings. Construction Manager and Trade Contractors for commissioned systems to attend each commissioning meeting.
3. Integrate and coordinate commissioning process activities into the construction schedule.
4. Consider and respond to commissioning issues in the Issues Log, which shall be the central communication and record for the commissioning team's efforts and progress.
5. Review commissioning process test procedures provided by Stephen Turner Inc.
6. Prepare and pre-check components and systems to ensure successful functional performance testing.
7. Execute commissioning functional performance test procedures.
8. Evaluate performance issues identified in test reports and, in collaboration with entity responsible for system and equipment installation, recommend corrective action.
9. In the event retesting is required, pre-check components and systems to ensure successful re-testing. Stephen Turner Inc. provides effort for initial and final testing. The Construction Manager and Trade Contractors shall provide the efforts required to ensure that subsequent additional re-testing is not required.
10. Review Training Manuals.

3.3 COMMISSIONING MEETINGS

A. A one hour Construction Phase kick-off meeting will be held during the construction period and will be a separate meeting, not part of another meeting such as Owner's, Design Professional, OAC Meetings, Coordination Meetings, etc.)

B. At least one (1) representative from the Construction Manager and each Trade Contractor of the systems being commissioned shall participate in scheduled construction phase commissioning activities. These persons should be prepared and qualified to discuss system items relevant to commissioning.

3.4 SUBMITTALS

A. The Construction Manager and the Trade Contractors shall provide a submittal log from which Stephen Turner Inc. will determine what system/component submittals should be forwarded to Stephen Turner Inc. for review in addition to the copies sent to the Design Professional. Stephen Turner Inc. will review selected submittals with respect to the Owner's Project Requirements.

B. Submittals shall show evidence that they have been reviewed and approved for submittal by the Construction Manager and the Trade Contractors prior to circulation to Owner, Stephen Turner Inc., the Design Professionals, and others for review or action. The Construction Manager's and the Trade Contractors' pre-review shall include a technical review of the material compared to the drawings and specifications, by persons familiar with that field. Submittals that do not meet the specifications are to be corrected prior to sending to Stephen Turner Inc. for review.

C. Submittals for products that are a substitution shall be clearly indicated on the cover page.

D. Submittals shall be marked to show exact items, sizes, components, electrical characteristics, operating characteristics, details required for this project, service clearances, and shall be annotated to match drawing schedules.

1. Product data sheets not showing clearly marked the individual specific type, model, and options intended for use on the project will be returned by Stephen Turner Inc. as not suitable for further review until revised.

E. Catalog information which makes reference to several options, variations, sizes, etc. shall be clearly marked (arrow, underline, circled, etc.) to indicate exactly the intended item. Generic cut sheets are not acceptable.

F. Provide Manufacturers' detailed installation requirements clearly marked (arrow, underline, circled, etc.) to exactly indicate the intended item.

G. Provide Manufacturers' detailed start-up requirements and procedures clearly marked (arrow, underline, circled, etc.) to indicate only the intended item.

H. Provide Manufacturers' operation instructions clearly marked (arrow, underline, circled, etc.) to indicate only the intended item.

I. Provide Manufacturers' recommended maintenance and troubleshooting procedures clearly marked (arrow, underline, circled, etc.) to indicate only the intended item.

J. Provide Warranty and clear statement of Owner's obligations to maintain equipment to preserve warranty.

K. Product data submittals for any OEM Variable Speed Drives shall include details of compliance with the Owner's standards for VSDs.

L. Stephen Turner Inc. shall be provided commissioning-related submittals for review in parallel with the Design Professional review. The focus of this commissioning review will be to:

1. Verify that the equipment or system meets the Owner's Project Requirements.
2. Verify that equipment or system includes provisions and accessories for access, maintenance, start-up and functional performance testing.

M. Stephen Turner Inc. will forward review comments to the Owner with copies sent simultaneously to the Design Professional. The Design Professional will select which of these commissioning comments are appropriate to incorporate in their submittal actions.

N. Training Manuals for commissioned equipment and systems shall be provided as formal submittals.

O. O&Ms, As-Builts, and BAS programming files shall be provided as formal submittals.

3.5 O&M MANUALS

A. General

1. O&M manuals in electronic format shall be submitted to Stephen Turner Inc. for review in addition to the other parties.
2. Stephen Turner Inc. will provide their review comments to the Design Professional, who will select which of these commissioning comments are appropriate to incorporate in their submittal actions.
3. The Construction Manager and Trade Contractors shall make changes to the O&M manual based on the comments of the Design Professional and Owner.
4. After delivering final copies of O&M manuals to the owner, confirm in writing the person who took delivery of the manuals and the date and time they were received.

B. Content

1. Include in the O&M Manuals all information required elsewhere, but not less than the following:
   a. A one-page informational sheet with:
      1) Tag number or system name
      2) Location / room number
      3) Manufacturer, model number, serial number, and other informational data listed on the nameplate
      4) Name, address, and telephone number of installing Contractor and equipment vendor
      5) Names, telephone numbers, and URL (internet address) of sources of service and repair parts
      6) Date of installation and of start-up
      7) Operational and performance data per installed conditions
      8) Setpoints at time of start-up
   b. A copy of equipment specifications
   c. A copy of the approved submittal (and/or RFI or change order if applicable)
   d. Manufacturer’s installation, operation, and maintenance manuals, including:
      1) Installation instructions

2) Operation instructions, including start-up, break-in, shutdown, seasonal, emergency, and special operation procedures

3) Maintenance instructions, including intervals, procedures and instructions for problem corrections, preventive maintenance, testing, alignment, adjustment, and repair

4) Removal and replacement instructions, including removal, replacement, disassembly, and assembly instructions, including any specific tools required, required tolerances, settings, or adjustments

5) Troubleshooting and diagnostic procedures, including troubleshooting and diagnostic procedures for common component malfunctions and the tools required for these procedures

e. Manufacturer's recommended preventive maintenance tasks for the component in a timeline fashion. Includes:

1) Preventive maintenance task

2) Procedure for the task

3) Special tools and instruments required for the task

4) Frequency of the task

f. Inspection and testing reports, including all documentation related to the start-up, balancing, and certification of the component

g. Maintenance records, indicating maintenance performed by the Construction Manager and Trade Contractors prior to operation of the component being turned over to the owner

h. A copy of the warranty, including the covered items, date of inception, and date of expiration

i. A single page document listing any special tools or testing equipment required for the operation, testing, or maintenance of the component

j. The sequence of operation and control diagrams for components controlled by the building automation system, or other commissioned controls

k. Wiring diagrams

C. Electronic O&M Manual Edits and Mark-Ups

1. O&M manual data should be edited and marked up to clearly indicate which products, model numbers, accessories, and options were provided with the equipment for this project.

2. The O&M manual shall be organized by system, equipment type, and component name (tag number).

D. Electronic O&M Manual Format

1. If a paper O&M Manual is also submitted, the electronic O&M should be labeled and organized so that all its sections appear in the same order in both versions.
2. All documents shall be submitted in standard formats acceptable to the Owner.
3. All electronic O&M data is to be delivered on CDs or DVD-ROM disks that are formatted for reading from a standard drive.
4. CDs are to be contained in durable plastic cases.
5. The CDs or DVD-ROM disks shall be labeled permanently in legible ink with the project name, "OPERATION AND MAINTENANCE MANUAL – VOLUME _ OF _" and a description of the contents, e.g., which systems are contained on the CD or DVD-ROM disks.
6. The O&M data shall be organized by the following naming structure for the electronic files:
    a. (Equipment Type Name)_(DOCUMENT TYPE IN CAPS).(file extension)
    b. Example: a manufacturer's O&M manual for air handling unit AHU-1 would be named: AHU-1_OM.pdf.
    c. Example: a chilled water piping submittal would be named CHW Pipe_SUB.pdf.
    d. The following are additional examples of documentation type abbreviations:
        1) O&M Manual: OM
        2) Installation Instructions: INSTL
        3) Submittal: SUB
        4) Specification Section: SPEC
        5) Change Order: CO
        6) Sequence Of Operation: SOO
        7) Control Diagrams: CRTLD
        8) Preventive Maintenance Instructions: PM
        9) Warranty: WTY
        10) Parts List: PL
        11) Tools List: TL
        12) Inspection/Test Reports: ITR
        13) Maintenance Records: MR
        14) Spare Parts List: SPL
        15) Wiring Diagrams: WD
7. The files on each CD or DVD-ROM disk should be organized by system according to the following folder structure:
    a. System name (e.g., Chilled Water System)
        1) Component Type / System Type (e.g., pumps, chilled water piping)
        2) Tag number or system name (e.g., Pump P-1, chilled water piping)

3) For numerous, repetitive equipment such as terminal units, the O&M documentation does not need to be separated by tag number. Rather, similar types of the equipment (e.g., fan powered with reheat, fan powered without reheat, etc.) can be grouped into one file and a table provided to document the tag numbers, model numbers, and capacity/performance data.

8. Where more than one CD or DVD-ROM disk is required, do not split the documentation for a system apart and include parts on two different CDs or DVD-ROM disks.

9. All documentation provided shall be clearly marked to indicate the installation for the present project. Unedited general cut sheets and manuals for multiple models, installations, etc. are not acceptable.

3.6 EQUIPMENT START-UP

A. The Construction Manager will coordinate start-up of commissioned systems and equipment by the Trade Contractors, and provide at least two working days notice to Stephen Turner Inc.

B. Stephen Turner Inc. will witness selected start-up of commissioned systems and equipment for compliance with the Owner's Project Requirements.

C. For all commissioned systems and equipment, one copy of the start-up report shall be forwarded to Stephen Turner Inc. for review and to document that the equipment is installed, operational, and ready for commissioning testing.

3.7 COMMISSIONING FUNCTIONAL PERFORMANCE TESTING

A. All Pre-Functional Checklists, start-ups, adjustments, controls programming, and verification of proper operation shall be completed by the Contractors prior to Functional Performance Testing.

1. While components can be tested as work is completed, system functional performance testing requires completion of all testing prerequisites: checklists, start-up, start-up forms, controls point-to-point checks, controls sequences programming and debugging, TAB, and other contractual requirements.

B. In general, Functional Performance Testing shall include testing each sequence in the sequence of operations, and other significant modes, sequences and control strategies not mentioned in the written sequences; including, but not limited to startup, shutdown, unoccupied and manual modes, modulation up and down the unit's range of capacity, power failure, alarms, component staging and backup upon failure, interlocks with other equipment, and sensor and actuator calibrations.

1. All interlocks and interactions between systems shall be tested.

2. All larger equipment will be individually tested.

3. Like units or assemblies that are numerous (many smaller rooftop packaged units, air terminal units, exhaust fans, windows, etc.) may have an appropriate sampling strategy applied per the list in the Table in Paragraph 1.6 above.

4. Heating equipment must be tested appropriately during winter and air conditioning equipment must be tested appropriately during summer to demonstrate performance under near-design conditions.

C. For systems and components in the Table in Paragraph 1.6 above, perform Functional Performance Tests as developed and led by Stephen Turner Inc. with the commissioning team.

1. Stephen Turner Inc. will provide draft Functional Performance Test procedures for review by the commissioning team members. Stephen Turner Inc. will incorporate any comments received into revised procedures. No response within five business days indicates approval.
2. The contractors will provide all tools or the use of tools to start, access equipment, check-out and functionally test equipment and systems, except for specified testing with portable data-loggers, which shall be supplied and installed by Stephen Turner Inc.

D. If major problems are discovered during any test (i.e. problems that will delay the completion of the test), the Construction Manager, with the responsible Trade Contractors, will fix the problem after the conclusion of testing. Once the Construction Manager and Trade Contractors have resolved the problem, testing shall be rescheduled and redone. If the issue is still not resolved, Stephen Turner Inc. shall determine with the Owner how Stephen Turner Inc.'s cost for subsequent retesting will be borne.

E. For identical or near-identical components (e.g., terminal units, diffusers, traps, valves, etc.): if 10%, or three, whichever is greater, of identical pieces of equipment fails to perform (size alone does not constitute a difference), not allowing it to meet its designed performance specification, all identical units may be considered unacceptable by the Owner. In such cases, the Contractor shall provide the Owner with the following:

1. Within one week of notification from the PM, the Contractor or manufacturer's representative shall examine all other identical units, making a record of the findings. The findings shall be provided to the PM and Construction Manager within two weeks of the original notice.
2. Within two weeks of the original notification, the Contractor or manufacturer shall provide a signed and dated, written explanation of the problem, cause of failures, etc. and all proposed solutions which shall include full equipment submittals. The proposed solutions shall not significantly exceed the specification requirements of the original installation.
3. The Owner will determine whether a replacement of all identical units or a repair is acceptable. Two examples of the proposed solution will be installed for examination by the Owner and Stephen Turner Inc.
4. Stephen Turner Inc. will be allowed to test the installations for up to one week, after which the Owner will decide whether to accept the solution.
5. Upon acceptance, the Contractor and/or manufacturer shall replace or repair all identical items, at their expense and extend the warranty accordingly, if the original equipment warranty had begun. The replacement/repair work shall proceed with reasonable speed beginning within one week from when parts can be obtained.

6. For any functional performance testing issue identified that is not related to any issue identified on a pre-functional checklist or to a start-up fault, Stephen Turner Inc. will direct the retesting of the equipment once after the Construction Manager indicates the issue has been resolved. If the issue is still not resolved, Stephen Turner Inc. shall determine with the Owner how Stephen Turner Inc.'s cost for subsequent retesting will be borne.

F. Any required retesting shall not be considered a justified reason for a claim of delay or for a time extension by the Contractor.

G. Every effort will be made to expedite the testing process and minimize unnecessary delays, while not compromising the integrity of the testing procedures. As tests progress and an issue is identified, Stephen Turner Inc. will discuss the issue with the appropriate Trade Contractor who is performing the test to determine how to proceed.

1. Corrections of minor issues identified may be made during testing at the discretion of Stephen Turner Inc. In such cases the issue and resolution will be documented on the test procedure form.
2. Major issues shall be corrected after the completion of testing. In such cases the issue and the Construction Manager and Trade Contractors proposed resolution will be documented on the test procedure form. Upon re-testing, the actual resolution will be documented.

H. Seasonal Commissioning Tests

1. Portions of the final commissioning test procedures including but not limited to FPTs will be seasonally dependent (e.g., cooling system needs to be tested in late spring, summer, or early fall) and will need to be performed at a different time of year than the rest of the final commissioning testing.

3.8 SITE OBSERVATIONS AND VERIFICATION

A. The Commissioning Authority will periodically visit the site to observe the work in progress. Observations and recommended corrective measures will be tracked in the commissioning issues log and communicated to the Construction Manager and Owner.

B. Any commissioning observation that does not meet the Owner's Project Requirements is a commissioning issue and will be included in the Commissioning Issues Log or other reports as appropriate. Each observation is intended to improve the project quality and achieve the Owner's Project Requirements.

3.9 DOCUMENTATION OF COMMISSIONING ISSUES

A. The Commissioning Issues Log focuses on systemic issues and is not a complete "punch list" containing all occurrences of the issue, i.e., all pieces of the equipment type mentioned in the issue may not have been individually verified.

B. To aid in issue resolution, any commissioning issues identified during commissioning testing will be noted in the Issues Log.

C. The Construction Manager shall respond to the Commissioning Authority and PM at least as often as commissioning meetings are being scheduled concerning the status of each outstanding issue identified during commissioning. Discussion shall cover explanations of any disagreements and proposals for their resolution.

1. If issues remain open for more than two commissioning meetings without steps taken toward resolution or without a plan communicated for resolving the issue, Stephen Turner may request, and the Construction Manager shall provide, a response in writing including explanations of any disagreements and proposals for their resolution.

D. If the commissioning team cannot reach a resolution to an issue or disagree on whether an item should be an issue, Stephen Turner Inc. and the Construction Manager will present the issue jointly to the Owner for direction.

3.10 AS-BUILT DRAWINGS

A. Redline or record drawings shall be kept up to date at all times.

B. The Construction Manager shall ensure that accurate red-line or record drawings of as-built conditions are maintained by each trade, at the job site, throughout the construction phase. The record drawings shall be available for review by Stephen Turner Inc. If discrepancies are noted on the Trade Contractor's record drawings, the Construction Manager will review the Trade Contractors' recording procedures and adjustments to ensure that the record drawings are kept up to date and accurate. The record drawings shall be corrected promptly to ensure the accuracy of the as-built drawings throughout the project.

C. The redline or record drawings maintained by the Trade Contractors will be periodically reviewed and verified during construction by Stephen Turner Inc. Discrepancies in the drawings will be documented and the Trade Contractors shall verify the as-built drawings against the installed system for all similar problems for correction.

D. As-built drawings in compliance with the Owner's requirements for electronic drawings shall be formally submitted and provided to Stephen Turner Inc. for review and use in commissioning documentation within 30 days of training.

E. As-built drawing one-lines and riser diagrams shall show the locations of all installed meters and sub-meters, as well as virtual meters, if applicable.

APPENDICES

APPENDIX A – Sample Commissioning Test Procedures

FUNCTIONAL PERFOMANCE TEST PROCEDURE: SAMPLE PROVIDED AS AN EXAMPLE OF THE LEVEL OF RIGOR REQUIRED

AHU CONTROL SEQUENCE TESTS

Date / Time:		Test Observed By:	

EQUIPMENT SAFETIES

PROCEDURE

Test 1: High Static Pressure. Install a manometer in the ductwork to read static pressure. Fan off during this test. Determine the design shutdown setting. If not specified on the drawings, get this information from the design engineer. Using a manometer and a squeeze bulb, slowly apply pressure to the switch sensing input until the threshold pressure is achieved. Verify that the switch activates. Release the pressure and verify that the switch remains activated (manual reset). Verify that the fan will not start in automatic or manual modes, either through the BAS, motor starter, or VFD as applicable. Press the manual reset and verify that the equipment will re-start.

This portion of the test will be considered successful if the high static switch shuts down the fan unconditionally, and cannot be bypassed by any manual controls.

Test 2: Low Temperature (Freeze Stat). Lower the temperature of the freeze stat sensing element. Verify that the switch activates. Raise the element temperature and verify that the switch remains activated (manual reset). Verify that isolation and outdoor air dampers close, that preheat valve opens, coil heats up, and that the fan will not start in automatic or manual modes, either through the BAS, motor starter, or VFD as applicable. Press the manual reset and verify that the equipment will re-start.

This portion of the test will be considered successful if the freeze stat shuts down the fan unconditionally, heating coil temperature rises, and the fan cannot be bypassed by any manual controls.

Test 3: AHU Fire Alarm Shutdown. Disconnect one end of the wire at the duct detector or fire alarm relay that is intended to shutdown the AHU. Verify that the fan will not start in automatic or manual modes, either through the BAS, motor starter, or VFD as applicable. Replace the wire and verify that the equipment will re-start.

This portion of the test will be considered successful if the control circuit as wired shuts down the fan unconditionally, and cannot be bypassed by any manual controls. NOTE: this is not a fire alarm test, this only tests that the interface method used will shut down the fan unconditionally.

When finished, return all overridden points, modes and sequences to their original state.

RESULTS & NOTES:

Test #	Acceptance Criteria	Tolerance	Accepted ? (Y / N)	Remarks
1	High Static Shutdown: The high static switch shuts down the fan unconditionally, and cannot be bypassed by any manual controls.	Shutdown at +/- 0.2 in.w.c. from setting		
2	Freeze Stat Shutdown: the freeze stat shuts down the fan unconditionally, and cannot be bypassed by any manual controls.	Shutdown at +/- 2°F from setting		
3	Fire Alarm Shutdown: The control circuit as wired shuts down the fan unconditionally, and cannot be bypassed by any manual controls.	None		

SUPPLY FAN VFD "RAMP-UP" AND "RAMP-DOWN"

PROCEDURE

Begin the test with the VFD driven motor in the off position. With the fan in manual control, cause a step change from 0 to 50% commanded output. Verify that the VFD "ramp up" settings cause the motor to slowly increase in speed, and do not cause a abrupt change in speed. Cause a step change from 50 to 25% commanded output. Verify that the VFD "ramp down" settings cause the motor to slowly decrease in speed, and do not cause a abrupt change in speed.

Once the test is completed, return all overridden points, modes and sequences to their original state.

This portion of the test will be considered successful if the motor speed changes gradually after a step change output from the control system, indicating the "ramp-up" and "ramp-down" controls have been set in the VFD.

1.1

RESULTS

Acceptance Criteria	Tolerance	Accepted ? (Y / N)	Remarks

The motor speed changes gradually after a step change output from the control system, indicating the "ramp-up" and "ramp-down" controls have been set in the VFD.	Abrupt changes not allowed		

SUPPLY FAN STATIC PRESSURE CONTROL TEST

PROCEDURE

Complete the high static pressure safety and VFD "Ramp-Up" and "Ramp-Down" tests before beginning this test.

Set up trends for the supply air static pressure, setpoint, and VFD percentage.

Begin the test with the fan at 0% capacity. With the duct static setpoint at 1.0 in. w.c., start the fan. Observe the VFD and motor to see if the control action is smooth and does not hunt. Allow sufficient time for the control system to stabilize, approximately 2 or 3 minutes maximum. Read the static pressure and verify that the setpoint was achieved. Decrease the static pressure setpoint by 0.5 in. w.c. and observe the control system reaction to the step change.

Return all overridden points, modes and sequences to their original state.

This portion of the test will be considered successful if the controls are stable and the duct static pressure controls achieve their setpoint.

RESULTS

Acceptance Criteria	Tolerance	AHU	Accepted ? (Y / N)	Remarks
The controls are stable and the duct static pressure controls achieve their setpoint.	+/-0.1 in. w.c.	B4		
		C2		

AIR-SIDE ECONOMIZER CONTROL TEST

PROCEDURE

High static pressure and freeze protection shutdown safety controls must be verified prior to this test, to avoid equipment damage during the test. For VAV system, open VAV boxes to permit unrestricted flow of the supply fan.

The relationship between the outside air temperature, return air temperature, and mixed air temperature setpoint must be appropriate for utilizing the outdoor air for cooling purposes. In general, the OAT should be 55°F or less in order to conduct this test, and colder is better. In general, this test can be conducted if the OAT meets these requirements: OAT below RAT, OAT above freezing. If the OAT is not in the proper range, a complete test of the mixed air system will require a subsequent visit when the conditions are appropriate (seasonal test).

Control the supply fan capacity for VAV air handlers manually during this test.

Set up trends for OA, MA, and RA temperatures; OA cfm and setpoint; and OA and RA damper positions.

Test 1: Override the outside air temperature value to a point just above the lower limit of the economizer enable threshold value (temperature or enthalpy as applicable). When the threshold value is crossed, the control should respond by entering and leaving the economizer mode. When entering the economizer mode, observe the dampers begin to modulate to maintain mixed air temperature setpoint. When leaving the economizer mode, observe the dampers revert to minimum outside air position.

This portion of the test will be considered successful if the system enters and leaves the economizer mode according to outside air temperatures at the specified thresholds, and maintains the minimum ventilation rate when the economizer is disabled.

Test 2: If there is an economizer "enable" or "lockout" temperature or enthalpy, temporarily manipulate this point as required to keep it from interfering with the test (e.g. enable the economizer without regard to OAT or enthalpy). Based on (OAT) and (RAT), determine a reasonable mixed air setpoint that will set the controls into motion. Observe the mixing dampers to see if the control action is smooth and does not hunt. Allow sufficient time for the control system to stabilize, approximately 2 or 3 minutes maximum. Read the mixed air temperature and verify that the setpoint was achieved. Select a different mixed air temperature setpoint, preferably at least 10 degrees different than the original setpoint, and observe the control system reaction to the step change.

Test #	Acceptance Criteria	Tolerance	AHU	Accepted ? (Y / N)	Remarks
1	The system enters and leaves the economizer mode according to outside air conditions at the specified thresholds, and maintains the minimum ventilation rate when the economizer is disabled.	Event occurs at specified temp.	B1		
			C2		
2	The mixed air controls are stable and achieve their setpoint.	+/- 10 % of setpoint	B1		

Return all overridden points, modes and sequences to their original state.

This portion of the test will be considered successful if the controls are stable and the mixed air controls achieve their setpoint.

RESULTS

SUPPLY AIR TEMPERATURE CONTROL TEST

PROCEDURE

High static pressure and freeze protection shutdown safety controls must be verified prior to this test, to avoid equipment damage during the test. For VAV system, open VAV boxes to permit unrestricted flow of the supply fan.

Temporarily disable the Air-Side Economizer Control operation before beginning this test.

Test 1: Temporarily disable the HW heating controls. Start the SA fan, and gradually increase the speed until 50 % capacity is reached. Adjust the SA heating temperature setpoint to 80°F and be sure it is higher than the SA temperature at this point. Release the HW controls. Observe the HW valve to see if the control action is smooth and does not hunt. Allow sufficient time for the control system to stabilize, approximately 2 or 3 minutes maximum. Read the SA temperature and verify that the setpoint was achieved. Gradually increase the SA fan capacity to 100 % and observe the control system reaction to the step change.

This portion of the test will be considered successful if the controls are stable and the SAT controls achieve their setpoint.

Test 2: Temporarily disable the CW cooling controls. Start the SA fan, and gradually increase the speed until 50 % capacity is reached. Adjust the SA cooling temperature setpoint to 55°F and be sure it is lower than the SA temperature at this point. Release the CW controls. Observe the CW valve to see if the control action is smooth and does not hunt. Allow sufficient time for the control system to stabilize, approximately 2 or 3 minutes maximum. Read the SA temperature and verify that the setpoint was achieved. Gradually increase the SA fan capacity to 100 % and observe the control system reaction to the step change.

Return all overridden points, modes, and sequences to their original state.

This portion of the test will be considered successful if the controls are stable and the SAT controls achieve their setpoint.

RESULTS

POWER FAILURE TEST

Date / Time: _____ **Investigator(s):** _____

This test must follow the regulations and requirement of local Fire Department. Perform this test before the building is occupied. Notify the Fire Department before this test is started.

1.1 OBJECTIVES

The purpose of this test is to verify that the generator starts within the designed time period after a power failure and supplies the power required by the systems. All systems and equipment must operate as intended after the power is restored and the power will maintain the specified quality as equipment start up. The circuit must be switched to supply generated power to all system and equipment required to be on emergency power. When power goes back to the normal condition the equipment and systems shall operate as normal without interruptions and the generators shall shut off.

1.2 PROCEDURE

Verify the generator start up time, voltage, and shut down. Verify that a random selection of equipment operates as intended.

The power failure procedure is as follows:

1. Notify the local fire department
2. Disconnect the electrical power supply to the building
3. Verify that all emergency functions are operable until the generator supplies power
4. Verify that the generator and all equipment operate as required
5. Connect the building to the electrical supply
6. Verify that the equipment continues to operate as intended
7. Notify the local fire department that the testing is completed

This test will require several observers (with 2-way radios) in different locations to verify when the equipment and systems are operational unless the building automation system is able to monitor all the

Test #	Acceptance Criteria	Tolerance	Accepted ? (Y / N)	Remarks
1	The HW controls are stable and the SAT controls achieve their setpoint.	+/- 2°F, no hunting		
2	The CW controls are stable and the SAT controls achieve their setpoint.	+/- 2°F, no hunting		

equipment and systems.

1.3 MEASURING EQUIPMENT

Prepare following measuring equipment, which shall have been calibrated less than 12 months before these tests:

- Stop watch
- Voltmeter
- Light meter

1.4 RESULTS

Emergency Lighting

Room number	Emergency Lighting ?	Room number	Emergency Lighting ?
	Yes / No		Yes / No
	Yes / No		Yes / No
	Yes / No		Yes / No
	Yes / No		Yes / No
	Yes / No		Yes / No
	Yes / No		Yes / No

Emergency Functions

Equipment	Power available ?	Equipment	Power available ?
	Yes / No		Yes / No
	Yes / No		Yes / No
	Yes / No		Yes / No

Generator

Start Up duration	( ) Sec.
Maintains required voltage during start-up	Yes / No
Maintains required voltage during power restoration	Yes / No
Shut Down duration	( ) Sec.

Equipment

Equipment type and #	Start up time after power failure (s)	Operates as intended during external power outage ?	Operates as intended after external power is restored ?	Comments
		Yes / No	Yes / No	
		Yes / No	Yes / No	
		Yes / No	Yes / No	
		Yes / No	Yes / No	
		Yes / No	Yes / No	
		Yes / No	Yes / No	
		Yes / No	Yes / No	
		Yes / No	Yes / No	
		Yes / No	Yes / No	
		Yes / No	Yes / No	
		Yes / No	Yes / No	

1.5 GENERAL COMMENTS:

END OF APPENDIX A

APPENDIX B: SAMPLE COMMISSIONING SCHEDULE

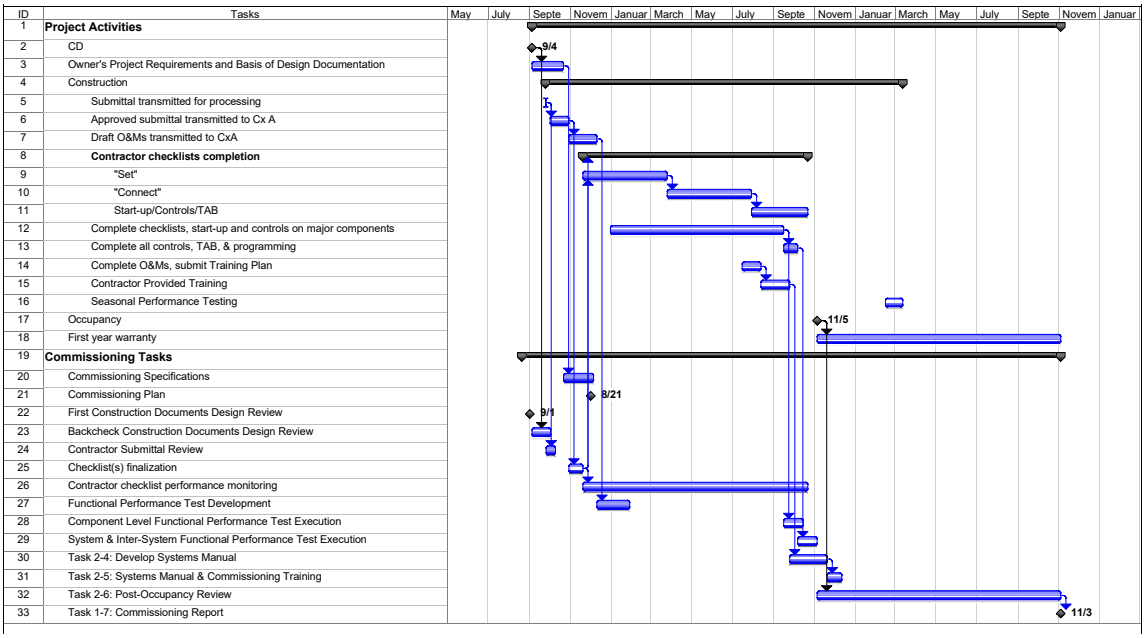

END OF APPENDIX D

APPENDIX E: SAMPLE CONTRACTOR'S AFFIDAVIT OF READINESS FOR TESTING COMMISSIONED SYSTEMS

CONTRACTOR'S AFFIDAVIT OF READINESS FOR TESTING COMMISSIONED SYSTEMS

Completion of this form is a required prerequisite before scheduling functional performance testing of each commissioned system. The Contractor shall complete and return this form to Stephen Turner Inc. before testing will be scheduled.

The following table lists the commissioned systems in the project. The contractor hereby confirms that the following systems are ready for testing and that all applicable prerequisites listed further below have been satisfied.

Commissioned System Name	Ready for Testing
[EQUIPMENT #1]	
[EQUIPMENT #2]	
[ETC]	

Note that BAS system configuration is considered a component of the installation for each relevant piece of commissioned equipment.

The following testing prerequisite documents have been provided to Stephen Turner Inc. for all of the applicable systems marked as "Ready for Testing".

- Start-Up Reports
- Approved Test and Balance Reports (air and water)
- Controls Point-to-Point Checkout Report
- Start-Up Reports for all major HVAC equipment
- BAS Trend Data for initial pre-testing commissioning analysis

A.

The following testing prerequisites have been completed for all of the systems marked as "Ready for Testing" above.

- The Contractor confirms Systems are on permanent power.
- The Contractor confirms Controls are on permanent network.
- The Contractor confirms that trend data has been set up for all controls input & output points.
- The Contractor confirms that control system alarms are programmed and ready for verification.
- The Contractor confirms that control system head-end graphics are completed and ready for verification.
- The Contractor confirms that redline drawings are current and available onsite for reference during testing.
- The Contractor confirms that they have reviewed the draft Functional Performance Tests and have completed all work required to execute the test procedures with Stephen Turner Inc.
- The Contractor confirms that all systems being commissioned by Stephen Turner Inc. have been installed and verified to be fully functioning in a manner consistent with the design and construction documentation.
- Any and all known incomplete work or deficiencies are listed below.

B.

Indicate whether the controls contractor has independently executed the test procedures prior to scheduling formal commissioning functional performance testing. **Yes / No**

Any known incomplete work or deficiencies on the above-listed systems:

_____

_____

Name of Contractor: _____

Name of Contractor's Project Manager: _____

Signature of Contractor's Project Manager: _____

Date: _____

END OF APPENDIX E

*****END OF SECTION*****

DIVISION 02

SECTION 024115

PAVEMENT REMOVAL

PART 1 - GENERAL

1.1 RELATED DOCUMENTS

A. Drawings and General Provisions of Contract, including General and Supplementary Conditions and other Division 1 Specifications Sections, apply to this Section.

1.2 SUMMARY

This section includes the following:

The Work under this section consists of the satisfactory removal of all asphalt pavement and/or bases, required for trench, driveway, roadway, structure and test pit excavation or directed by the Engineer.

PART 2 - PRODUCTS

2.1 MATERIALS

Not Applicable

PART 3 - EXECUTION

Pavement to be removed shall be cut uniformly along the lines shown on the Contract Drawings or as directed by the Engineer.

Concrete pavement and/or bases shall be cut with an approved concrete saw through a minimum of one third of the depth pavement/base.

Bituminous pavement/base to be removed shall be cut by saw or other approved methods.

After the pavement has been cut, care shall be exercised by the Contractor during breaking and removal of the pavement in order that the adjacent pavement outside the cut shall not be damaged.

No sections or pieces of pavement shall be used for trench backfill and all such materials shall be kept separate from other excavated materials.

END OF SECTION 024115

SECTION 024119

SELECTIVE DEMOLITION

PART 1 - GENERAL

1.1 RELATED DOCUMENTS

A. Drawings and General Provisions of Contract, including General and Supplementary Conditions and other Division 1 Specifications Sections, apply to this Section.

B. Rhode Island Department of Transportation Standard Specifications for Roads and Bridge Construction amended to February 2024.

1.2 SUMMARY

A. The Work of this Section Includes:

1. Demolition and removal of selected portions of exterior or interior of building or structure and site elements.
2. Removal and salvage of existing items for delivery to Owner and removal of existing items for reinstallation.

1.3 DEFINITIONS

A. Remove: Detach items from existing construction and legally dispose of off-site unless indicated to be removed and salvaged or removed and reinstalled.

B. Remove and Salvage: Detach items from existing construction, in a manner to prevent damage, and deliver to Owner as indicated.

C. Remove and Reinstall: Detach items from existing construction, in a manner to prevent damage; prepare for reuse; and reinstall where indicated.

D. Existing to Remain: Existing items of construction that are not to be removed.

1.4 MATERIAL OWNERSHIP

A. Unless otherwise indicated, demolition waste becomes property of Contractor.

B. Historic items, relics, antiques, and similar objects including, but not limited to, cornerstones and their contents, commemorative plaques and tablets, and other items of interest or value to Owner that may be uncovered during demolition remain the property of Owner.

1. Carefully salvage in a manner to prevent damage and promptly return to Owner.

1.5 COORDINATION

A. Arrange selective demolition schedule so as not to interfere with Owner's operations.

1.6 PREINSTALLATION MEETINGS

A. Predemolition Conference: Conduct conference at Project site unless otherwise determined.

1. Inspect and discuss condition of construction to be selectively demolished.
2. Review structural load limitations of existing structure.
3. Review and finalize selective demolition schedule and verify availability of demolition personnel, equipment, and facilities needed to make progress and avoid delays.
4. Review requirements of work performed by other trades that rely on substrates exposed by selective demolition operations.
5. Review areas where existing construction is to remain and requires protection.
6. Review and finalize protection requirements.
7. Review procedures for noise control and dust control].
8. Review storage, protection, and accounting for items to be removed for salvage or reinstallation.

1.7 INFORMATION SUBMITTALS

A. Qualification Statements: For refrigerant recovery technician.

B. Engineering Survey: Submit engineering survey of condition of building.

C. Survey of Existing Conditions: Submit survey.

D. Proposed Protection Measures: Submit report, including Drawings, that indicates the measures proposed for protecting individuals and property, for environmental protection, for dust control and, for noise control. Indicate proposed locations and construction of barriers.

E. Schedule of Selective Demolition Activities: Indicate the following:

1. Detailed sequence of selective demolition and removal work, with starting and ending dates for each activity. Ensure Owner's on-site operations are uninterrupted.
2. Temporary interruption of utility services. Indicate how long utility services will be interrupted.
3. Coordination for shutoff, capping, and continuation of utility services.
4. Use of elevator and stairs.
5. Coordination of Owner's continuing occupancy of portions of existing building and of Owner's partial occupancy of completed Work.

F. Statement of Refrigerant Recovery: Signed by refrigerant recovery technician responsible for recovering refrigerant, stating that all refrigerant that was present was recovered and that recovery was performed in accordance with EPA regulations. Include name and address of technician and date refrigerant was recovered.

G. Warranties: Documentation indicating that existing warranties are still in effect after completion of selective demolition.

1.8. CLOSEOUT SUBMITTALS

A. Inventory: Submit a list of items that have been removed and salvaged.

1.9 QUALITY ASSURANCE

A. Refrigerant Recovery Technician Qualifications: Universal certified by an EPA-approved certification program.

1.10 FIELD CONDITIONS

A. Owner will not occupy portions of building immediately adjacent to selective demolition area. Conduct selective demolition so Owner's operations will not be disrupted.

B. Conditions existing at time of inspection for bidding purpose will be maintained by Owner as far as practical.

1. Before selective demolition, Owner will remove the following items:
   a. To be determined by Owner.

C. Notify Architect of discrepancies between existing conditions and Drawings before proceeding with selective demolition.

D. Hazardous Materials:

1. It is not expected that hazardous materials will be encountered in the Work.
   a. Hazardous materials will be removed by Owner before start of the Work.
   b. If materials suspected of containing hazardous materials are encountered, do not disturb; immediately notify Architect and Owner. Hazardous materials will be removed by Owner under a separate contract.

E. On-site sale of removed items or materials is not permitted.

1.11 WARRANTY

A. Existing Warranties: Remove, replace, patch, and repair materials and surfaces cut or damaged during selective demolition, by methods and with materials and using approved contractors so as not to void existing warranties. Notify warrantor before proceeding.

B. Notify warrantor on completion of selective demolition, and obtain documentation verifying that existing system has been inspected and warranty remains in effect. Submit documentation at Project closeout.

PART 2 - PRODUCTS

2.1 PERFORMANCE REQUIREMENTS

A. Regulatory Requirements: Comply with governing EPA notification regulations before beginning selective demolition. Comply with hauling and disposal regulations of authorities having jurisdiction.

B. Standards: Comply with ANSI/ASSP A10.6 and NFPA 241.

PART 3 - EXECUTION

3.1 EXAMINATION

A. Verify that utilities have been disconnected and capped before starting selective demolition operations.

B. Review Project Record Documents of existing construction or other existing condition and hazardous material information provided by Owner. Owner does not guarantee that existing conditions are same as those indicated in Project Record Documents.

3.2 PREPARATION

A. Temporary Shoring: Design, provide, and maintain shoring, bracing, and structural supports as required to preserve stability and prevent movement, settlement, or collapse of construction and finishes to remain, and to prevent unexpected or uncontrolled movement or collapse of construction being demolished.

1. Strengthen or add new supports when required during progress of selective demolition.

B. Temporary Protection: Provide temporary barricades and other protection required to prevent injury to people and damage to adjacent buildings and facilities to remain.

1. Provide protection to ensure safe passage of people around selective demolition area and to and from occupied portions of building.
2. Provide temporary weather protection, during interval between selective demolition of existing construction on exterior surfaces and new construction, to prevent water leakage and damage to structure and interior areas.
3. Protect walls, ceilings, floors, and other existing finish work that are to remain or that are exposed during selective demolition operations.
4. Cover and protect furniture, furnishings, and equipment that have not been removed.
5. Comply with requirements for temporary enclosures, dust control, heating, and cooling specified in Section 015526 "Traffic Control."

C. Existing Items to Remain: Protect construction indicated to remain against damage and soiling during selective demolition. When permitted by Architect, items may be removed to a suitable, protected storage location and reinstalled in their original locations after selective demolition operations are complete.

3.3 UTILITY SERVICES AND BUILDING SYSTEMS

A. Existing Services/Systems to Remain: Maintain utilities and building systems and equipment to remain and protect against damage during selective demolition operations.

1. Maintain fire-protection facilities in service during selective demolition operations.

B. Existing Services/Systems to Be Removed, Relocated, or Abandoned: Locate, identify, disconnect, and seal or cap off utilities and building systems serving areas to be selectively demolished.

1. Owner will arrange to shut off indicated utilities when requested by Contractor.
2. Arrange to shut off utilities with utility companies.
3. If disconnection of utilities and building systems will affect adjacent occupied parts of the building, provide temporary services/systems that bypass area of selective demolition and that maintain continuity of services/systems to those parts of the building.
4. Demolish and remove existing building systems, equipment, and components indicated on Drawings to be removed.

a. Piping to Be Removed: Remove portion of piping indicated to be removed and cap or plug remaining piping with same or compatible piping material.
b. Equipment to Be Removed: Disconnect and cap services and remove equipment and components.

3.4 SALVAGE/REINSTALL

A. Removed and Salvaged Items:

1. Clean salvaged items.
2. Pack or crate items after cleaning. Identify contents of containers with label indicating elements, date of removal, quantity, and location where removed.
3. Store items in a secure area until delivery to Owner.
4. Transport items to Owner's storage area on-site.
5. Protect items from damage during transport and storage.

B. Removed and Reinstalled Items:

1. Clean and repair items to functional condition adequate for intended reuse.
2. Pack or crate items after cleaning and repairing. Identify contents of containers.
3. Protect items from damage during transport and storage.
4. Reinstall items in locations indicated. Comply with installation requirements for new materials and equipment. Provide connections, supports, and miscellaneous materials necessary to make item functional for use indicated.

3.5 SELECTIVE DEMOLITION, GENERAL

A. Site Access and Temporary Controls: Conduct selective demolition and debris-removal operations to ensure minimum interference with roads, streets, walks, walkways, and other adjacent occupied and used facilities.

1. Do not close or obstruct streets, walks, walkways, or other adjacent occupied or used facilities without permission from Owner and authorities having jurisdiction. Provide alternate routes around closed or obstructed trafficways if required by authorities having jurisdiction.
2. Use water mist and other suitable methods to limit spread of dust and dirt. Comply with governing environmental-protection regulations. Do not use water when it may damage adjacent construction or create hazardous or objectionable conditions, such as ice, flooding, and pollution.

3.6 SELECTIVE DEMOLITION PROCEDURES FOR SPECIFIC MATERIALS

A. Concrete:

1. Demolish in small sections. Using power-driven saw, cut concrete to a depth of at least 3/4 inch at junctures with construction to remain. Dislodge concrete from reinforcement at perimeter of areas being demolished, cut reinforcement, and then remove remainder of concrete. Neatly trim openings to dimensions indicated.
2. Demolish in sections. Cut concrete full depth at junctures with construction to remain and at regular intervals using power-driven saw, and then remove concrete between saw cuts.

B. Masonry: Demolish in small sections. Cut masonry at junctures with construction to remain, using power-driven saw, and then remove masonry between saw cuts.

C. Concrete Slabs-on-Grade: Saw-cut perimeter of area to be demolished, and then break up and remove.

3.7 DISPOSAL OF DEMOLISHED MATERIALS

A. Remove demolition waste materials from Project site and dispose of them in an EPA-approved construction and demolition waste landfill acceptable to authorities having jurisdiction.

1. Do not allow demolished materials to accumulate on-site.
2. Remove and transport debris in a manner that will prevent spillage on adjacent surfaces and areas.

B. Burning: Do not burn demolished materials.

3.8 CLEANING

A. Clean adjacent structures and improvements of dust, dirt, and debris caused by selective demolition operations. Return adjacent areas to condition existing before selective demolition operations began.

END OF SECTION 024119

DIVISION 03

SECTION 03 20 00 - CONCRETE REINFORCEMENT

PART 1 - GENERAL

1.1 WORK INCLUDED

A. This section of the specification covers the furnishing and installation of reinforcement for cast in place concrete.

1.2 RELATED DOCUMENTS

A. Drawings and General Provisions of Contract, including General and Supplementary Conditions and other Division 1 Specifications Sections, apply to this Section.
B. Rhode Island Department of Transportation Standard Specifications for Roads and Bridge Construction amended to February 2024.
C. Section 033000 Cast-in Place Concrete.

1.3 SYSTEM DESCRIPTION

A. Materials and construction shall conform to ACI 3l8 and ACI 350 unless otherwise noted on the design drawings or modified herein.

1.4 SUBMITTALS: IN ACCORDANCE WITH REQUIREMENTS OF GENERAL SPECIFICATIONS, SUBMIT THE FOLLOWING

A. The Contractor shall furnish the Engineer with complete checked, reinforcing steel shop drawings and bar lists. Shop drawing shall include grade of steel used as well as splice lengths.
B. Mill test reports shall accompany drawings. Fabrication shall not commence until the drawings and mill test reports have been released by the Engineer.

1.5 REFERENCES

A. The following standards form a part of these specifications:

American Concrete Institute (ACI)

ACI SP 66 ACI Detailing Manual

ACI 3l8 Building Code Requirements for Concrete

American Society for Testing and Materials (ASTM)

ASTM A185 Standard Specification for Welded Steel Wire Fabric for Concrete Reinforcement

ASTM A497 Specification for Welded Deformed Steel Wire Fabric for Concrete Reinforcement

ASTM A6l5 Deformed Billet Steel Bars for Concrete Reinforcement

ASTM A775 Epoxy-coated Reinforcing Steel Bars

ASTM A884 Epoxy-coated Welded Wire Fabric

American Welding Society (AWS)

AWS 12.1 Recommended Practices for Welding Reinforcing Steel, Metal Inserts and Connections in Reinforced Concrete Construction

PART 2 - PRODUCTS

2.1 MATERIALS

A. Steel reinforcing bars shall conform to ASTM A6l5, Grade 60, and A775 if epoxy-coated bars are specified.

B. Welded steel wire fabric shall conform to ASTM A185 or ASTM A497 and ASTM A884 if epoxy-coated fabric is specified. Gauge and spacing of wires shall be as indicated on the drawings.

C. Reinforcing steel shall be detailed in accordance with ACI SP 66 modified as applicable to conform to ACI 318.

D. Reinforcement shall be accurately formed to the dimensions indicated on the drawings. Bars shall be shipped to the site with bars of the same size and shape, fastened in bundles with securely wired on metal identification tags listing both size and mark.

E. Any bar showing cracks after bending shall be discarded.

F. Steel failing to meet the requirements of this specification, or the drawings will be rejected and shall be removed from the site immediately

PART 3 - EXECUTION

3.1 STEEL INSTALLATION

A. Before being placed in position, reinforcement shall be thoroughly cleaned of loose mill and rust scale, dirt, and other coatings (including ice), that reduce or destroy bond. When there is a delay in depositing concrete after reinforcement is in place, bars shall be reinspected and cleaned as necessary.

B. After forms have been oiled, but before concrete is placed, all steel shall be securely wired in the exact position called for and shall be maintained in that position until all concrete is placed and compacted. Chair bars and supports shall be provided in a number and arrangement satisfactory to the Engineer.

C. Concrete blocks having a minimum bearing area of 2 inches by 2 inches and equal in quality to that specified for the slab, shall be used for supporting reinforcing bars for slabs on grade. Wood blocks, stones, brick chips, etc., shall not be used to support reinforcement.

D. Metal supports shall be of types that will not penetrate the surface of formwork or slab and which will not show through or stain surfaces that are to be exposed to view, painted or unpainted.

E. Welding of reinforcing bars will be permitted only where permission of the Engineer has been obtained in advance. Such welding shall be performed only under conditions established by the Engineer, and in accordance with AWS 12.1.

F. Reinforcement, which is to be exposed for a considerable length of time after having been placed, shall be painted with a heavy coat of cement grout, if required by the Engineer.

END OF SECTION 032000

SECTION 03 30 00 - CAST-IN-PLACE CONCRETE

PART 1 - GENERAL

1.1 WORK INCLUDED

A. This Section covers all concrete and all related items necessary to place and finish the concrete work.

1.2 RELATED DOCUMENTS

A. Drawings and General Provisions of Contract, including General and Supplementary Conditions and other Division 1 Specifications Sections, apply to this Section.
B. Rhode Island Department of Transportation Standard Specifications for Roads and Bridge Construction amended to February 2024.
C. Section 032000 Concrete Reinforcement.
D. Section 312100 Earthwork
E. Items furnished under other Sections and installed under this Section include, but are not limited to:
- Items embedded in concrete, including anchors, sleeves, floor drains, castings, frames for hatches, angles, nosings, and other miscellaneous metals.

1.3 REFERENCES

A. The following standards form a part of these specifications:

American Concrete Institute (ACI)

ACI 30l Structural Concrete for Buildings

ACI 302 Recommended Practice for Concrete Floor and Slab Construction

ACI 304 Recommended Practice for Measuring, Mixing, Transporting, and Replacing Concrete

ACI 305 Recommended Practice for Hot Weather Concreting

ACI 306 Recommended Practice for Cold Weather Concreting

ACI 318 Building Code Requirements for Reinforced Concrete

ACI 347 Recommended Practice for Concrete Formwork

American Society for Testing and Materials (ASTM)

ASTM C33 Concrete Aggregates

ASTM C39 Compressive Strength of Cylindrical Concrete Specimens

ASTM C42 Obtaining and Testing Drilled Cores and Sawed Beams of Concrete

ASTM C87 Effect of Organic Impurities in Fine Aggregate on Strength of Mortar

ASTM C94 Ready Mixed Concrete

ASTM C143 Standard Method for Slumps of Portland Cement Concrete

ASTM C150 Portland Cement

ASTM C171 Sheet Materials for Curing Concrete

ASTM C231 Air Content of Freshly Mixed Concrete by the Pressure Method

ASTM C260 Air Entraining Admixtures for Concrete

ASTM C309 Liquid Membrane Forming Compounds for Curing Concrete

ASTM C494 Chemical Admixtures for Concrete

ASTM D1751 Preformed Expansion Joint Fillers for Concrete Paving and Structural Construction (Non-extruding and Resilient Bituminous Types)

ASTM D1752 Preformed Sponge Rubber and Cork Expansion Joint Fillers for Concrete Paving and Structural Construction

1.4 SUBMITTALS: IN ACCORDANCE WITH REQUIREMENTS OF GENERAL SPECIFICATIONS, SUBMIT THE FOLLOWING

A. Six sets of shop drawings of the materials specified herein shall be submitted to the Engineer for review.

B. Six copies of the statement of materials constituting the design of mixes which satisfy the specified strength for each size aggregate as required by ASTM C94 shall be submitted to the Engineer within one week following award of the contract.

C. Provide one copy of the "Certificate of Delivery" for each load of concrete as it arrives on the site, under the provisions of ASTM C94.

PART 2 - PRODUCTS

2.1 CONCRETE

A. Concrete conforming to the requirements listed below shall be used where indicated on the drawings. Unless otherwise indicated, or approved by the Engineer, concrete shall be the 4,500 psi mix.

TABLE

Minimum Comp. Strength at 28 days (psi)	Maximum Water/Cement ratio (gallons per bag of cement)*	Cement Factor: 94 lb. Bags per cubic yard minimum**
3000	0.59 (6.9)	5.5
4000	0.48 (5.6)	6.5
5000	0.40 (4.7)	7.4

* Based on air-entrained concrete. If non-air-entrained concrete is called for, the listed maximum water/cement ratios may be increased slightly, as approved by the Engineer. The water is the total water in the mix, including free water on the aggregate.

** These are minimum amounts; increase as necessary to meet mix requirements.

B. Concrete shall conform to ASTM C94. One copy of the Certificate of Delivery required by ASTM C94 shall be delivered to the Engineer immediately upon arrival of each load of concrete at the site. The Contractor shall be responsible for the design of the concrete mixtures.

C. Standard compression tests of all proposed mixes shall be made by the testing laboratory or other satisfactory evidence shall be presented that the design mixes will attain the minimum strengths listed on the design drawings or called for herein, within the limitations of the ACI Code. No concrete shall be delivered to the job site until the Engineer has approved the design mixes.

D. All concrete (unless otherwise directed) shall contain an air-entraining agent. Air entrained concrete shall have an air content by volume of 3 to 6 percent for 1½ inch aggregate and 4 to 8 percent for ¾ inch aggregate. The air content shall be the responsibility of the testing laboratory and in accordance with ASTM C23l.

E. All concrete shall contain a mid-range water reducer to minimize cement and water content of the mix, at the specified slump, in accordance with ASTM C494.

F. Slump for all concrete shall be from 3 inch to 4 inch, except for concrete using a superplasticizer, when the maximum slump shall be 8 inches. Any concrete having a slump greater than 4 inches (8 inches with superplasticizer) shall be promptly removed from the site.

G. No calcium chloride or admixtures containing calcium chloride shall be added to the concrete. No admixture other than those specified shall be used in concrete without the specific written permission of the Engineer in each case.

H. No additional water, except for the amount indicated by the design mix shall be added to the concrete without the prior permission of the Engineer.

2.2 CEMENT

A. The cement shall be an approved brand of American manufactured Portland Cement, Type II conforming to ASTM CI50. The brand name and type of cement proposed for use shall be submitted to the Engineer for approval immediately following award of contract. Only one color of cement, all of the same manufacture, shall be used for the work.

B. When the use of high early strength Portland cement (Type III) is permitted by the Engineer the same strength requirements shall apply, but the indicated strengths shall be attained in 7 days instead of 28 days.

2.3 ADMIXTURES

A. Air entraining agent shall be in accordance with ASTM C260.

B. Water reducing agent shall be a mid-range water reducer meeting ASTM C494, Type A.

C. Water reducing agent retarder shall be in accordance with ASTM C494, Type D.

D. Superplasticizer agent shall be in accordance with ASTM C494, Type F or Type G and contain no more than 0.1% chloride ions. Product may be plant added or field added based on the best application considering distance, temperature and time.

2.4 AGGREGATES

A. Except as otherwise noted, aggregate shall conform to the requirements of ASTM C33.

B. Fine aggregate shall consist of washed inert natural sand conforming to the requirements of ASTM C33.

C. Coarse aggregate shall consist of well graded crushed stone or washed gravel conforming to the requirements of ASTM C33.

D. The following designated sizes of aggregate shall be the maximum employed in concrete.

- inch for mass concrete
- 1½ inch for reinforced sections 18 inch and over in thickness
- ¾ inch for reinforced and un-reinforced sections less than 18 inch thickness.

2.5 WATER

Water for concrete shall be potable, free from injurious amounts of oil, acid, alkali, organic matter and other deleterious substances.

2.6 NON-METALLIC SHRINKAGE RESISTANT GROUT

A. Grout: ASTM C 1107, factory-packaged, nonmetallic aggregate grout, noncorrosive, nonstaining, mixed with water to consistency suitable for application and a 30-minute working time. The minimum ultimate compressive strength of the grout shall be 5000 psi at 7 days and 7500 psi at 28 days.

2.7 CURING MATERIALS

A. Curing compound shall be a curing/hardener compound such as Acurion by AntiHydro, Sikaguard Cure/Hard by Sika, Super Diamond Clear by Euclid or approved equal.

B. Curing paper shall be a fiber reinforced laminated Kraft bituminous product conforming to the requirements of ASTM Cl7l.

2.8 JOINT FILLER

A. Preformed joint filler strip shall conform to ASTM Dl75l or Dl752, having a thickness as indicated on the drawings.

B. Fillers shall be provided in pieces of the full thickness required. Use of multiple layers of thin pieces to make up the full thickness will not be permitted.

2.9 JOINT SEALANT

A. Joint sealant for construction and control joints shall be a two part polysulfide base sealant conforming to Thiokol's Building Trade Performance Specification, Class A (self leveling), Type II (hardness: 35 45 Shore A).

PART 3 - EXECUTION

3.1 GENERAL

A. Under no circumstances shall concrete that has set or partially set before placing be used; and no re-tampering of concrete or grout will be permitted.

3.2 PREPARATION

A. Before placing concrete, forms and the space to be occupied by the concrete shall be thoroughly cleaned, and reinforcing steel and embedded metal shall be free from dirt, oil, mill scale, loose rust, paint or other material which would tend to reduce the bond.

B. Earth, concrete, masonry, or other water permeable material against which concrete is to be placed shall be thoroughly saturated with water immediately before concrete is placed. No concrete shall be placed until the consolidation of the ground and the arrangement and details of forms and reinforcing have been inspected and approved by the Engineer.

C. When joining fresh concrete to concrete which has attained full set, the latter shall be cleaned by chipping and washing off all dirt and scum and laitance. It then shall be moistened prior to placing new concrete.

D. Concrete surfaces that act as a seat for structural members (other than those resting on grout) shall be troweled to an extremely flat and level surface. If necessary, such surfaces shall be ground off to achieve the required flatness and level.

E. Fill concrete on top of concrete shall be placed in the locations indicated on the drawings or designated by the Engineer. Before fill concrete is placed, the following procedures shall be used to prepare surfaces; all dirt, scum and laitance shall be removed by chipping and washing. The clean, roughened base surface shall be saturated with water, but shall have no free water on the surface. A coat of 1:2 cement sand grout, approximately 1/8 inch thick, shall be well scrubbed into the thoroughly dampened concrete base. The concrete fill shall be placed immediately, before grout has dried or set. Fill concrete shall be brought to the lines and grades shown on the drawings or approved by the Engineer.

F. Concrete for thrust and anchor blocks shall be placed against undisturbed earth and wooden side forms shall be used to provide satisfactory lines and dimensions. Felt roofing paper shall be placed to protect joints. No concrete shall be placed so as to cover joints, bolts or nuts, or to interfere with the removal of the joints. Minimum bearing areas and dimensions shall be as shown on the drawings.

3.3 MIXING

A. Concrete shall be ready mixed, or transit mixed, as produced by equipment acceptable to the Engineer. No hand mixing will be permitted. Adding water in controlled amounts during the mixing cycle shall be done only with the express approval of, and under the direction of, the Engineer.

B. Ready mix or transit mixed concrete shall be transported to the site in watertight agitator or mixer trucks loaded not in excess of rated capacities for the respective conditions as stated on the

nameplate. Discharge at the site shall be within 1½ hours after cement was first introduced into the mix. Central mixed concrete shall be plant mixed a minimum of 1½ minutes per batch and then shall be truck mixed or agitated a minimum of 8 minutes. Agitation shall begin immediately after the pre mixed concrete is placed in the truck and shall continue without interruption until discharge. Transit mixed concrete shall be mixed at mixing speed for at least 10 minutes immediately after charging the truck, followed by agitation without interruption until discharged.

C. All central plant and rolling stock equipment and methods shall conform to the latest Truck Mixer and Agitator Standards of the Truck Mixer Manufacturers' Bureau of the National Ready Mixed Concrete Association, as well as ACI 304 and ASTM C94.

D. Attention is called to the importance of dispatching trucks from the batching plant so that they shall arrive at the site of the work just before the concrete is required, thus avoiding excessive mixing of concrete while waiting or delays in placing successive layers of concrete in the forms.

3.4 INSTALLATION/APPLICATION/ERECTION

A. PLACING

1. No concrete shall be placed by pumping methods without the prior written approval of the Engineer. Should the Contractor be allowed to place concrete by pumping methods, procedures, mix design of concrete, and all other precautions shall be in accordance with ACI 304.2R and as approved by the Engineer.

2. Concrete shall be placed in alternate areas, as defined by the construction and control joints indicated on the design drawings. A minimum of 3 days shall elapse between placement of adjacent sections.

3. Segregation of the concrete shall be prevented during handling; should any segregation occur, the concrete should be remixed before it is placed. Concrete shall be placed in the forms in horizontal layers not over l to 2 feet thick. Concrete shall not be allowed to drop freely more than 4 feet. If the free drop to the point of placement must exceed 4 feet, the Contractor shall obtain the approval of the Engineer for the proposed method of depositing the concrete. The concrete shall not be required to flow over distances greater than 3 feet in any direction in the forms or on the ground, unless otherwise permitted by the Engineer.

4. Unless otherwise noted, the work begun on any day shall be completed in daylight of the same day.

5. "Cold Joints" are to be avoided, but if they occur, they are to be treated as bonded construction joints.

6. Chutes for conveying concrete shall be of U shaped design and sized to insure a continuous flow of concrete. Flat (coal) chutes shall not be employed. Chutes shall be metal or metal lined, and each section shall have approximately the same slope. The slope shall not be less than 25 nor more than 45 degrees and shall be such as to prevent segregation of the ingredients. The discharge end of the chute shall be provided with a baffle plate or spout to prevent segregation. If the discharge end of the chute is more than 5 feet above the surface of the concrete in the forms, a spout shall be used and the lower end maintained as near the surface of deposit as practicable. When the operation is intermittent, the chute shall discharge into a hopper. Chutes shall be thoroughly cleaned before and after each run, and the debris and any water shall be discharged outside the forms. Concrete shall not be allowed to flow horizontally more than 5 feet.

7. Concrete during and immediately after depositing shall be thoroughly compacted by means of suitable tools. Internal type mechanical vibrators shall be employed to produce the required quality of finish. Vibration shall be done by experienced operators under close supervision and

shall be carried on long enough to produce homogeneity and optimum consolidation without permitting segregation of the solid constituents or "pumping" or migration of air. All vibrators shall be supplemented by proper wooden spade puddling adjacent to forms to remove included bubbles and honeycomb. This is essential for the top lifts of walls. All vibrators shall travel at least 10,000 rpm and be of adequate capacity. At least one vibrator shall be used for every 10 cubic yards of concrete per hour. In addition, one spare vibrator in operating condition shall be on the site.

8. Concrete slabs on the ground shall be well tamped into place and foundation material shall be wet, tamped, and rolled until thoroughly compacted prior to placing concrete.

9. Concrete shall be deposited continuously in layers of such thickness that no concrete will be deposited on concrete which has hardened sufficiently to cause the formation of seams and planes of weakness within the section. If a section cannot be placed continuously, construction joints may be located at points as provided for in the drawings or approved by the Engineer.

10. Chutes, hoppers, spouts, adjacent work, etc., shall be thoroughly cleaned before and after each run, and the water and debris shall not be discharged inside the form.

B. CONCRETE PLACING DURING COLD WEATHER

1. Concrete shall not be placed on frozen ground, and no frozen material or material containing ice shall be used. Materials for concrete shall be heated when concrete is mixed, placed, or cured when the mean daily temperature is below 40°F, or is expected to fall to below 40°F, within 72 hours, and the concrete after placing shall be protected by covering, heat, or both. No accelerant shall be used to prevent freezing.

2. The temperature of concrete surfaces shall not be permitted to drop below 50ºF. for at least 7 days after placement of the concrete.

3. All details of Contractor's handling and protecting of concrete during freezing weather shall be subject to the approval and direction of the Engineer. All procedures shall be in accordance with provisions of ACI 306.

C. CONCRETE PLACING DURING HOT WEATHER

1. Concrete just placed shall be protected from the direct rays of the sun and the forms and reinforcement just prior to placing shall be sprinkled with cold water. The Contractor shall make every effort to minimize delays which will result in excessive mixing of the concrete after arrival on the job.

2. During periods of excessively hot weather (90°F, or above) ingredients in the concrete shall be cooled insofar as possible and cold mixing water shall be used to maintain the temperature of the concrete at permissible levels all in accordance with the provisions of ACI 305. Any concrete with a temperature above 90°F, when ready for placement will not be acceptable, and will be rejected.

3. Temperature records shall be maintained throughout the period of hot weather giving air temperature, general weather conditions (calm, windy, clear, cloudy, etc.) and relative humidity. The record shall include checks on temperature of concrete as delivered and after placing in forms. Data should be correlated with the progress of the work so that conditions surrounding the construction of any part of the structure can be ascertained.

D. PIPES AND EMBEDDED METALS

1. Special care shall be taken to bring the concrete into solid contact with pipes and iron work embedded in the walls and floors, particularly underneath and around all pipes where a head of water exists, making watertight joints.

2. In general, such embedded items are not shown on the structural design drawings. Design drawings of the other trades shall be consulted for their location and details.

3. Anchor bolt location, size and details shall be verified with the equipment manufacturers certified drawings before installation.

4. Anchor bolts, reglets, sleeves, edge angles and similar embedded items will be provided, delivered to the site under other Sections of the specification, for installation under this Section.

5. Where edge angles, etc., have nuts welded on to receive machine screws, the threads of the nuts shall be protected from concrete, and the concrete shall be excluded from the space to be occupied by the screw, by the use of wood plugs or other effective means.

6. Inserts required for hanging mechanical and electrical items will be provided and installed in the forms under the mechanical and electrical Sections of the specification.

7. Should the Contractor be allowed to leave openings in the concrete for pipes or ironwork, to await the arrival of items that would delay the prosecution of the work, the openings shall be subject to the approval of the Engineer. Appropriate construction joints shall be provided. In filling any such openings with concrete, a mixture of l: l l/2: 3 concrete shall be used and a watertight bond shall be secured between the old and new concrete.

8. In bolting miscellaneous items to concrete after the concrete has set, expansion bolts of an approved pattern and type shall be used. The Contractor shall submit to the Engineer, for approval, the types of expansion bolts. Expansion bolts shall not be used until they are approved.

E. CURING

1. Concrete curing shall be performed as specified in ACI 30l and as stated herein. All curing procedures shall have prior approval of the Engineer.

2. Concrete Floors: Concrete floors which are to receive paint, concrete fill, mortar setting beds, grout fill, or any other subsequent finish shall be cured by one of the following procedures immediately after completion of placement and finishing:

   a. Ponding or continuous sprinkling.

   b. Application of absorptive mats or fabric kept continuously wet.

   c. Application of sand kept continuously wet.

   d. Application of waterproof sheet materials conforming to ASTM Cl7l.

   e. Application of curing compounds conforming to ASTM C309, if it can be demonstrated to the Engineer's satisfaction that the compound is applicable and that it will not prevent bonding of the subsequent finish to be received. Compound shall be placed at a rate of 200 square feet per gallon, in two applications perpendicular to each other.

3. Curing procedure shall be continued for at least 7 days.

   a. Moisture loss from surface placed against metal or wood forms shall be minimized by keeping forms wet until removal.

b. Curing shall be continued for at least 7 days. When forms are removed during the curing period, surfaces shall be cured by spraying or by the use of a curing compound as previously specified.

c. Surfaces shall be protected from traffic or damage until surfaces have hardened sufficiently. If necessary, 1/2 inch thick plywood sheets shall be used to protect the exposed surface.

F. BRACING AND SUPPORTS

1. All concrete members shall be adequately and safely supported and braced until the permanent supports and braces are installed.

2. Backfilling against exterior walls shall not be done until supporting slabs are in place and have attained 70 percent of design strength, otherwise walls shall be braced against earth lateral pressure, using a system approved by the Engineer.

3. Backfilling against retaining walls shall not commence until the wall concrete has reached its 28-day strength.

G. REMOVING FORMS AND SUPPORTS

1. Removal of forms shall take place in accordance with ACI 347, Section 3.6. Except as otherwise specifically authorized by the Engineer, forms shall not be removed until the concrete has aged for the following number of day degrees or attained 50 percent strength. (Day degrees equals the total of number of days times the average daily air temperature at the surface of concrete. For example, 5 days at a daily average temperature of 60°F. equals 300 day degrees.)

Location	Day Degrees
Beams and Slabs	500
Walls and Vertical Surfaces	200

2. Shores under beams and slabs shall not be removed until the concrete has attained at least 70 percent of the specified cylinder strength and also sufficient strength to support safely its own weight and the construction loads upon it.

H. PATCHING

1. Defective concrete and honeycombed areas as determined by the Engineer shall be chipped down reasonably square and at least one inch deep to sound concrete by means of hand chisels or pneumatic chipping hammers. Irregular voids or surface stones need not be removed if they are sound, free of laitance, and firmly imbedded in the parent concrete, subject to Engineer's final inspection. If honeycomb exists around reinforcement, chip to provide a clear space at least 1 inch wide all around the steel. For areas less than 1 1/2 inches deep, the patch may be made following the procedure for filling form tie holes, described in the subsection below, using adequately dry (non trowelable) mixtures to avoid sagging. Thicker repairs will require build up in 1 inch layers on successive days. Unless otherwise indicated, thicker repairs shall be made with Vertipatch mortar mixture blended with Acryl Set, both by Master Builders, Inc., Cleveland, Ohio, or approved equal.

2. For concrete areas exposed to serious abrasion and/or impact forces, the Engineer may order the use of grout with a non shrink metallic aggregate (Embeco by Master Builders, Inc.; Ironite by Fox Industries, Madison, IL; or approved equal) as an additive in the proportions listed below:

	Small Patches		Large Formed Patches	
Material	Volumes	Weights	Volumes	Weights
Cement	1.0	1.0	1.0	1.0
Metal Aggregate	0.15	0.25	0.2	0.33
Sand	1.5	1.5	1.5	1.0
Pea Gravel	--	--	1.5	1.5

I. FINISHING OF FORMED SURFACES

1. All concrete which is to be left exposed to view shall be scraped to remove projecting imperfections left by voids in the forms.

2. In addition to scraping, exterior exposed concrete shall be covered with a cement-base plaster mix. The mix shall consist of Thoroseal Plastic Mix and Acryl 60, as manufactured by Standard Drywall Products, Miami, FL, or approved equal. It shall be mixed and applied in accordance with the manufacturer's recommendations.

3. To permit satisfactory finishing, forms shall be removed from the vertical faces of the concrete as early as is possible without damaging the surface. Immediately after stripping forms, any fins or projections left by the forms shall be chipped off, and the surfaces rubbed smooth.

4. Form tie holes and other voids and faults shall be patched. Voids shall be cleaned out, roughened, thoroughly wetted, coated with neat cement paste, and filled with mortar of cement and sand in the same proportions, materials, and color as used in the concrete. The surface of the patch shall be flush with the surrounding surface after finishing operations are complete. Surface shall be kept continuously damp until patches are firm enough to be rubbed without damage.

5. Rubbing shall be performed while the surface is wet using a carborundum or cement sand brick, to achieve a smooth uniform, even textured finish. Patched and chipped areas shall be blended to match as closely as possible the appearance of the rest of the surface. No cement wash or plastering will be permitted, and no mortar shall be used except as required above.

6. Where finishing is performed before the end of the curing period, concrete shall under no circumstances be permitted to dry out, and shall be kept continuously moist from time of placing until end of curing period, or until curing membrane is applied.

J. CONCRETE FLOOR FINISHING REQUIREMENTS

1. Unless designated otherwise, concrete floors shall have a troweled finish as specified in Section ll.7 of ACI 30l. Troweled finishes shall conform to the requirements of "Class A Tolerances," Section ll.9 as specified in ACI 30l.

K. TESTING

1. The Contractor shall provide all field testing and inspection services and shall pay for all such services. The Engineer shall approve the testing laboratory and shall inform the

Contractor when samples are to be taken for testing. The Contractor shall forward all test results to the Engineer as soon as they are available.

a. The Testing Laboratory shall conform to the requirements of ASTM E-329 as modified in 780 CMR R1 in the State Building Code. They shall be licensed by the State Board of Building Regulations and Standards.

2. At least one slump test shall be performed from each truck load of concrete. The sample for slump shall be taken from the middle third of a truck load. Air content tests shall be made at the discretion of the Engineer. If the measured slump or air content falls outside the specified limits, a check test shall be made immediately on another portion of the same sample. In the event of a second failure, the concrete shall be considered to have failed the requirements of the specification and shall be immediately removed from the jobsite to be discarded.

3. The Contractor shall advise the Engineer of his readiness to proceed with concrete placement at least one working day prior to each placement. The Engineer will inspect the preparations for concrete, including the preparation of previously placed concrete, the reinforcing, and the alignment and tightness of formwork. No placement shall be made without the prior approval of the Engineer.

4. A minimum of four standard compression test cylinders shall be made and tested for each 100 cubic yards or fraction thereof for each type and design strength of concrete from each day's placement of concrete. One cylinder shall be tested at 7 days and two cylinders at 28 days. The fourth cylinder from each set shall be kept until the 28-day test report on the second and third cylinders in the same set has been received. The Engineer reserves the right to require test cylinders to be made for each truckload of concrete if the nature of the project or project experience indicates such additional tests are required for proper control of concrete quality; such tests will be at the Owner’s expense.

5. The strength level shall be considered satisfactory so long as the averages of all sets of three consecutive strength test results equal or exceed the specified strength f'c, and no individual strength test (average of two cylinders) result falls below the specified strength f'c by more than 500 psi.

6. In the event the average compressive strength of the two 28-day cylinders do not achieve the required level, the Engineer may elect to test the fourth cylinder immediately or test it after 56 days.

L. FAILURE TO MEET REQUIREMENTS

1. The Engineer shall have the right to reject concrete represented by low strength tests or to agree to further testing of the concrete. Rejected concrete shall be promptly removed and replaced with concrete conforming to the specification. The decision of the Engineer as to whether substandard concrete is to be accepted or rejected or additional tests shall be conducted shall be final. All direct and indirect costs associated with further curing and testing of the concrete shall be at the Contractor's expense. All costs associated with removing rejected concrete, placing new concrete, and conducting tests on new concrete shall be at the Contractor’s expense.

2. If the Engineer agrees to consider further curing and/or testing of the concrete before making a final decision, the Contractor shall submit a detailed plan to the Engineer, including

proposed criteria for acceptance of the concrete. The plan may include additional curing of the concrete, drilling and testing of cores, load testing of the structure, or a combination.

3. If additional curing is permitted before further inspection and testing, the Contractor shall provide any necessary materials and labor to further cure the suspect concrete.

4. If drilling and testing of cores is permitted, the Contractor shall be responsible for obtaining the cores, including provision of ladders, scaffolding, and such incidental equipment as may be required. If additional curing is permitted, cores shall be drilled after the curing period, and shall be in accordance with ASTM Methods C39 and C42. The Contractor shall repair all core holes to the satisfaction of the Engineer.

5. The burden of proof, including, but not limited to the work of cutting and testing the cores, inspection, evaluation, engineering, repair of the holes, or removal and replacement of the concrete in question, and all associated costs therefor, shall be at the expense of the Contractor.

6. If load testing of the concrete is permitted, and if not otherwise indicated, slabs or beams under load test shall be loaded with their own weights plus a superimposed load of 2 times the design live load. The load shall be applied uniformly over the portion being tested in the approved manner and left in position for 24 hours. The structure shall be considered satisfactory if deflection "D" in feet, at end of 24-hour period, does not exceed the following value:

   D equals 0.001 (L x L)/t

   in which "L" is span in feet, "t" is depth of slab, or beam in inches. If deflection exceeds "D" in the above formula, the concrete shall be considered faulty unless within 24 hours after removal of the load, the slab, or beam under test recovers at least 75 percent of the observed deflection.

7. If the suspect concrete still fails to meet specification requirements, the Engineer shall have the right to reject the concrete, have it removed and replaced, in accordance with paragraph 5 above, or to require mechanical strengthening of the concrete to satisfy project requirements. The Contractor shall submit a removal and replacement plan for review by the Engineer.

END OF SECTION 033000

SECTION 03 30 00 - CAST-IN-PLACE CONCRETE

PART 1 - GENERAL

1.01 DESCRIPTION

A. Provide all materials, labor, equipment, service, etc., necessary and incidental to the completion of all Cast-In-Place Concrete work as shown on the drawings and as specified herein.

B. Work included consists of but is not limited to the following:

1. Footings, foundation walls, retaining walls, etc.
2. Slabs on grade interior and exterior of building.
3. Concrete sidewalks, curbs, stairs, and ramps.
4. Equipment bases, pads, transformer pads, and concrete for mechanical and electrical trades.
5. Foundation and slab insulation.
6. Concrete hardener, sealers, finishes for floors and exposed concrete.
7. Vapor barrier.

C. Related work specified elsewhere:

1. Setting of sleeves, under floor raceway, etc., for mechanical or electrical work – Divisions 15 and l6.

D. Work installed but furnished by others:

1. Setting and grouting of steel column-leveling plates and anchor bolts.
2. Setting of frames, angles, rough hardware, etc., embedded in concrete.
   a. Formwork subcontractor shall set those items installed in formwork.
3. Perimeter insulation.

E. This section specifies cast-in-place concrete, including form work, reinforcing, mix design, placement procedures and finishes. Concrete paving, walks and exterior pads are specified in Civil Construction Documents.

1.02 SUBMITTALS

A. General: Submit the following according to the Conditions of the Contract and Division 1 Specification Sections.

B. Product data for proprietary materials and items, including reinforcement and forming accessories, admixtures, patching compounds, waterstops, joint systems, curing compounds, sealers, and dry-shake finish materials as requested by the Owner.

C. Shop Drawings for Reinforcement detailing fabricating, bending, and placing concrete reinforcement. Comply with ACT 315 "Manual of Standard Practice for Detailing Reinforced Concrete Structures" showing bar schedules, stirrup spacing, bent bar diagrams, arrangement of concrete reinforcement. Include special reinforcement required for openings through concrete structures.

D. Shop drawings for form work indicating fabrication and erection of forms for specific finished concrete surfaces. Show form work construction including jointing, special form joints or reveals, location and pattern of form tie placement, and other items that affect

exposed concrete visually.

1. Owners review is for general architectural applications and features only. Designing form work for structural stability and efficiency is Contractor's responsibility.

E. Product data of materials as requested by the Owner, including names, sources and descriptions for the following items: corrosion inhibitor, and micro-silica based admixture.

F. Laboratory test reports for concrete materials and mix design test.

G. Materials Certificates in lieu of material laboratory test reports when permitted by the Owner. Materials certificates shall be signed by manufacturer and Contractor, certifying that each material item complies with, or exceeds, specified requirements. Provide certification from admixture manufacturers that chloride content complies with specification requirements.

H. Resubmitted shop drawings shall have revisions circled or clouded to identify the change. Resubmitted shop drawings lacking revision clouds or circles will be rejected and returned without review.

1.03 QUALITY ASSURANCE

A. Codes and Standards: Comply with provisions of following codes, specifications, and standards, except where more stringent requirements are shown or specified:

1. ACI 301 "Specifications for Structural Concrete for Buildings".
2. ACI 318 "Building Code Requirements for Structural Concrete".
3. Concrete Reinforcing Steel Institute (CRSI), "Manual of Standard Practice".
4. ACI 304R.89 "Guide for Measuring, Mixing, Transporting, and Placing Concrete".
5. ACI 305R.91 "Hot Weather Concreting".
6. ACI 306.1-90 "Standard Specification for Cold Weather Concreting".
7. ACI 315 "Details and Detailing of Concrete Reinforcement".
8. ACI 347 "Recommended Practice for Concrete Form work".
9. ACI 211 "Recommended Practice for Selecting Proportions for Normal and Heavyweight Concrete".
10. ACI 214 "Recommended Practice for Evaluation of Compressive Test Results of Concrete".
11. ACI 302 "Guide for Concrete Floor and Slab Construction".
12. ACI 201 "Guide to Durable Concrete".

B. Concrete Testing Service: Owner shall engage a testing agency acceptable to perform material evaluation tests and to design concrete mixes.

C. Materials and installed work may require testing and retesting at any time during progress of Work. Tests, including retesting of rejected materials for installed Work, shall be done at the Contractor's expense.

D. Shoring Design: Contractors shall employ and pay a Registered Professional Engineer to provide shoring design and recommended shoring removal schedule.

PART 2 - PRODUCTS

2.01 FORM MATERIALS

A. Forms for Exposed Finish Concrete: Plywood, metal, metal-framed plywood faced, or

other acceptable panel-type materials, to provide continuous, straight, smooth, exposed surfaces. Furnish in largest practicable sizes to minimize number of joints and to conform to joint system shown on drawings. Provide form material with sufficient strength and thickness to withstand pressure of newly placed concrete without bow or deflection.

1. Use plywood complying with U.S. Product Standard PS-1 "B-B (Concrete Form) Plywood", Class I, Exterior Grade or better, mill-oiled and edge-sealed, with each piece bearing legible inspection trademark.

B. Forms for Unexposed Finish Concrete: Plywood, lumber, metal, or other acceptable material. Provide lumber dressed on at least 2 edges and one side for tight fit.

C. Forms for Cylindrical Columns and Supports: Metal, glass-fiber reinforced plastic or paper or fiber tubes that will produce smooth surfaces without joint indications. Provide units with sufficient wall thickness to resist wet concrete loads without deformation.

D. Form Release Agent: Provide commercial formulation form release agent with a maximum of 350 g/L volatile organic compounds (VOCs) that will not bond with, stain, nor adversely affect concrete surfaces, and will not impair subsequent treatments of concrete surfaces.

E. Form Ties: Factory-fabricated, adjustable-length, removable or snap off metal form ties, designed to prevent form deflection and to prevent spalling concrete upon removal. Provide units which will leave no metal closer than 1-1/2" to the plane of the exposed concrete surface.

1. Provide ties which, when removed, will leave holes not larger than 1" diameter in concrete surface.

2.02 REINFORCING MATERIALS

A. Reinforcing Bars:

1. Non welded reinforcing bars: ASTM A 615, Grade 60, deformed.
2. Reinforcing bars to be welded: ASTM A706, Grade 60, deformed.

B. Steel Wire: ASTM A 82, plain, cold-drawn steel.

C. Welded Wire Fabric: ASTM A 185, welded steel wire fabric. All mesh reinforcement shall be furnished in flat sheets.

D. Supports for Reinforcement: Bolsters, chairs, spacers, and other devices for spacing, supporting, and fastening reinforcing bars and welded wire fabric in place. Use wire bar type supports complying with CRSI specifications. Solid concrete brick batts may be used to support reinforcing bars in foundation or wire fabric in slabs-on-grade. Maximum size of 1/2" brick may be used.

1. For slabs-on-grade, use supports with horizontal runners where base material will not support chair legs.
2. For exposed-to-view concrete surfaces, where legs of supports are in contact with forms, provide supports with legs which are plastic protected (CRSI, Class 1) or stainless steel protected (CRSI, Class 2).

2.03 CONCRETE MATERIALS

A. Portland Cement: ASTM C 150, Type I, American made.

1. Use one brand of cement throughout project, unless otherwise acceptable to Engineer.

B. Normal Weight Aggregates: ASTM C 33, and as herein specified. Provide aggregates from a single source for exposed concrete.

1. For exterior exposed surfaces, do not use fine or coarse aggregates containing spalling-causing deleterious substances.

C. Coarse aggregate: clean washed gravel or crushed trap rock, or combination thereof, graded in accordance with ASTM C 33 size number 67 (3/4" aggregate).

D. Water: Potable, clean, free from deleterious amounts of acid, alkalis, and organic materials.

E. Air-Entraining Admixture: ASTM C 260, certified by manufacturer to be compatible with other required admixtures. Provide one of the following:

1. Air-Mix or Perma-Air; Euclid Chemical Co.
2. MB-VR or Micro-Air; Master Builders.
3. Darex AEA or Daravair 1000; W.R. Grace.
4. Sika AER, Sika Corp.

F. Water-Reducing Admixture: ASTM C 494, Type A, and containing not more than 0.1 percent chloride ions by weight of cement. Subject to compliance with requirements, provide one of the following:

1. WRDA , W.R. Grace & Co.
2. Eucon WR-75; Euclid Chemical Co.
3. Pozzolith 122N or Polyheed; Master Builders.
4. Plastocrete 161, Sika Corp.

G. High-Range Water-Reducing Admixture (Superplasticizer): ASTM C 494, Type F or Type G and containing not more than 0.1 percent chloride ions by weight of cement. Subject to compliance with requirements, provide one of the following:

1. WRDA or Daracem; W.R. Grace.
2. Eucon 37; Euclid Chemical Co.
3. Rheobuild or Polyheed; Master Builders.
4. Sikament 300, Sika Corp.

H. Water-Reducing, Non-Chloride <u>Accelerator</u> Admixture: ASTM C 494, Type C or E, and containing not more than 0.1 percent chloride ions by weight of cement. Subject to compliance with requirements, provide one of the following:

1. Accelguard 80; Euclid Chemical Co.
2. Pozzotec 20; Master Builders.
3. Daraset: W. R. Grace

I. Water-Reducing, <u>Retarding</u> Admixture: ASTM C 494, Type D, and containing not more than 0.1 percent chloride ions by weight of cement. Subject to compliance with requirements, provide one of the following:

1. Pozzolith R; Master Builders.
2. Eucon Retarder 75; Euclid Chemical Co.
3. Daratard-17; W.R. Grace.
4. Plastiment, Sika Corporation

J. Prohibited Admixtures: Calcium chloride thyocyanates or admixtures containing more than 0.1 percent chloride ions are not permitted.

2.04 RELATED MATERIALS

A. Non-Shrink Grout: CRD-C 621, factory pre-mixed non-metallic grout. ASTM C1107 Grade B or C, factory pre-mixed grout. Subject to compliance with requirements, provide one of the following:

1. "Set Grout"; Master Builders.
2. "Euco-NS"; Euclid Chemical Co.
3. "Sure-Grip Grout"; Dayton Superior Corp.
4. "Five Star Grout"; U.S. Grout Corp.

B. Waterstops: Provide flat, dumbbell type or centerbulb type waterstops at construction joints and other joints as indicated. Size to suit joints. Polyvinyl Chloride Waterstops: Corps of Engineers CRD-C 572. Subject to compliance with requirements, provide products of one of the following manufacturers:

1. Anti-Hydro Waterproofing Co.
2. The Burke Co.
3. Harbour Town Products.
4. W.R. Meadows, Inc.

C. Waterstops: Provide where indicated on Contract Drawings, Volclay Waterstop-RX, RX102 or 102H, or equal. Install in strict accordance with Manufacturers requirements, using WB-Adhesive.

D. Compressible Backup Material: Closed cell polyethylene foam rod equivalent to Ethafoam sealant backer rod, manufactured by Dow Chemical Co.

E. Absorptive Cover: Burlap cloth made from jute or kenaf, weighing approximately 9 oz./sq. yd., complying with AASHTO M 182, Class 2.

F. Moisture-Retaining Cover: One of the following, complying with ASTM C 171.

1. Waterproof paper.
2. Polyethylene film.
3. Polyethylene-coated burlap.

G. Water Based Acrylic Membrane Curing Compound: Membrane curing compound complying with ASTM C309 Type I Class B. Maximum volatile organic compound (VOC) rating of 350 g/L. Subject to compliance with requirements, provide one of the following:

1. Masterkure 100W; Master Builders.
2. Aqua-cure; Euclid Chemical Co.
3. Safe Cure & Seal ; Dayton Superior
4. Highseal, Conspec Marketing & Mfg..

H. Bonding Agent: Polyvinyl acetate or acrylic base. Acrylic or Styrene Butadiene. Subject to compliance with requirements, provide one of the following:

1. Polyvinyl Acetate (Interior Only)
   a. Superior Concrete Bonder; Dayton Superior Corp.

b. Everweld; L & M Construction Chemicals.
c. Eucoweld; Euclid Chemical Co.

2. Acrylic or Steyrene Butadiene:
   a. Acrylic Bondrete, The Burke Co.
   b. Day-Chem Ad Bond,. Dayton Superior
   c. SBR Latex, Euclid Chemical
   d. Daraweld C, W. R. Grace
   e. Acryl-Set, Master Builders

I. Epoxy Adhesive: ASTM C 881, two component material suitable for use on dry or damp surfaces. Provide material "Type", "Grade", and "Class" to suit project requirements. Subject to compliance with requirements, provide one of the following:

1. Rezi-Weld 1000, W. R. Meadows, Inc..
2. Sikadur 32 Hi-Mod; Sika Chemical Corp.
3. Euco Epoxy 452 or 620; Euclid Chemical Co.

J. Vapor Retarder: 15 Mil minimum thickness. Provide vapor retarder over prepared subbase material. Tape and lap all seams per manufactures recommendations. Use only materials which have a vapor permeance of 0.010 perms or less when tested in accordance with ASTM E9, Procedure A and exceed requirements of ASTM E 1745 Class A Standards. Subject to compliance with requirements, provide products of one of the following manufacturers:

1. Moistop; Fortifiber
2. Plybar Plus II, Glass Kraft.
3. Stego Wrap Vapor Barrier.

K. Epoxy joint filler: Epoxy joint filler shall be three (3) component, 100% solids compound with a shore D hardness of 50.

1. Euclid Chemical Company's "Euco Epoxy #700"
2. Metzer/McGuire's, "MM-80"
3. Sika Corporation's, "Sikadur 51".

L. Premolded joint filler: standard cork, ASTM D1752-(1978) Type II, manufactured by Grace Construction Products, W.R. Meadows, Inc.

M. Structural repair compound: The Euclid Chemical Company's 'Euco Epoxy #460 or #463, Sika Corporation's, "Colma-Dur" or "Colma-Dur LV" or L & M Construction Chemical's "Epopatch".

N. Dovetail Slots: Shall be 22 gage material.

1. "D/A 100"; Dur-O-Wal
2. "AA 100"; AA Wire Products Company
3. "No. 100 Standard"; Heckmann

O. Granular Base: Evenly graded mixture of fine and coarse aggregates to provide, when compacted, a smooth and even surface below slabs on grade.

P. Evaporation Control Monomolecular film-forming compound applied to exposed concrete slab surfaces for temporary protection from rapid moisture loss. Subject to compliance with requirements, provide one of the following:

1. Ecuobar, Euclid Chemical
2. E-Con, L&M Construction Chemicals
3. Confilm, Master Builders Inc.

Q. Underlayment Compound: Free-flowing, self-leveling, pumpable, cement based compound for applications from 1" thick to feathered edges and shall have a minimum compressive strength of 3,000 psi. Subject to compliance with requirements, provide one of the following:

1. Level Layer II, Dayton Superior Corp.
2. Flo-Top, Euclid Chemical Co.
3. Underlayment 110, Master Builders, Inc.
4. Stoncrete UL1, Stonhard, Inc.

2.05 PROPORTIONING AND DESIGN OF MIXES

A. Prepare design mixes for each type and strength of concrete by either laboratory trial batch or field experience methods as specified in ACI 301. For the trial batch method, use an independent testing agency acceptable to Owner for preparing and reporting proposed mix designs.

1. Do not use the same testing agency for field quality control testing.

2. Selection of Concrete Proportions by Trial Batches:

a. The concrete shall be proportioned to produce an average strength level in 28 days exceeding the required strength by an amount specified under Excess Strength Requirements. Adequacy of concrete proportions shall be confirmed by an approved testing laboratory on the basis of trial laboratory batches of concrete with both air content and slump at the maximum permitted by the specifications. Tests shall be made in accordance with "Method of Test for Compressive Strength of Molded Concrete Cylinders" (ASTM C39) on specimens prepared in accordance with "Method of Making and Curing Test Specimens in the Laboratory" (ASTM C192). Trial batch determination of concrete proportions shall be performed for each class of concrete specified unless field performance data is provided as specified below.

3. Selection of Concrete Proportions by Performance Data:

a. The concrete shall be proportioned to produce an average strength level exceeding the required strength. Adequacy of concrete strength shall be confirmed by records of 30 <u>consecutive</u> strength tests representing concrete having identical materials, proportions, air content and slump to that specified for each class of concrete specified. The 30 <u>consecutive</u> strength test records must have been obtained within the year preceding submission.

4. Excess Strength Requirements:

a. Laboratory trial batches must verify strength attainment in 28 days which shall exceed the required compressive strength (fc') by the amount specified in the following:

1. If the production facility has established control records, based on at least 30 <u>consecutive</u> strength tests of a similar mix obtained within the

past year representing similar materials and conditions to those expected, the average strength used as a basis for selecting proportions shall exceed the required strength in accordance with Section 5.3 of ACI 318.

2. If suitable records of strength test performance are not available, proportions shall be selected to produce an average strength at least 1200 psi greater than the required strength.

B. Submit written reports to Owner of each proposed mix for each class of concrete at least 15 days prior to start of work. Do not begin concrete production until mixes have been reviewed by Engineer.

C. Adjustment to Concrete Mixes: Mix design adjustments may be requested by Contractor when characteristics of materials, job conditions, weather, test results, or other circumstances warrant; at no additional cost to Owner and as accepted by Architect. Laboratory test data for revised mix design and strength results must be submitted to and accepted by Architect before using in work.

D. Admixtures:

1. Use water-reducing admixture in concrete as required for placement and workability.
2. Use non-chloride accelerating admixture in concrete slabs placed at ambient temperatures below 50 deg F (10 deg C).
3. Use air-entraining admixture in exterior exposed concrete, unless otherwise indicated. Add air-entraining admixture at manufacturer's prescribed rate to result in concrete at point of placement having total air content with a tolerance of plus-or-minus 1-1/2% within following limits
   a. Concrete structure and slabs exposed to freezing and thawing, deicer chemicals, or subjected to hydraulic pressure: 6% air.
   b. Do not air entrain slab on grade concrete.

E. Use admixtures for water-reducing and set-control in strict compliance with manufacturer's directions, and only with Architect's approval.

F. The addition of water to the concrete mix, once it has reached the job site, is strictly prohibited.

G. Evaluation and acceptance of Concrete:

a. The evaluation and acceptance of concrete shall be governed by "Building Code Requirements for Reinforced Concrete" (ACI 318).

b. In general, the strength level of the concrete will be considered satisfactory if the averages of all sets of three consecutively tested concrete specimens equal or exceed the required strength and no individual strength test result falls below the required strength by more than 500 PSI.

c. If the above requirements are not met, and if the likelihood of low strength concrete is confirmed, additional tests shall be performed at the contractor's expense as outlined in Chapter 5 of the ACI 318 Code or other action appropriate to the circumstances and as determined by the Engineer shall be taken to assure the load-carrying capacity of the structure under design loads.

2.06 CONCRETE MIXING

A. Ready-Mix Concrete: Comply with requirements of ASTM C 94, and as herein specified.

1. Provide batch ticket for each batch discharged and used in work, indicating project identification name and number, date, mix type, mix time, quantity, and amount of water introduced.

2. When air temperature is between 85 and 90 degrees F, reduce mixing and delivery time from 1-1/2 hours to 75 minutes, when air temperature is above 90 degrees F, reduce mixing and delivery time to 60 minutes.

2.07 CONCRETE MIXTURES FOR BUILDING ELEMENTS

A. All interior and exterior concrete, including but not limited to, foundation walls, retaining walls and footings : Proportion normal-weight concrete mixture as follows:
1. Minimum Compressive Strength: 4000 psi at 28 days.
2. Maximum Water-Cementitious Materials Ratio: 0.50.
3. Slump Limit: four (4) inches or eight (8) inches for concrete with verified slump of two (2) to four (4) inches before adding high-range water-reducing admixture, plus or minus one (1) inch.
4. Air Content: six (6) percent, plus or minus 1.5 percent at point of delivery for 1-inch and 3/4-inch nominal maximum aggregate sizes.

B. Slabs-on-Grade: Proportion normal-weight concrete mixture as follows:
1. Minimum Compressive Strength: 4000 psi at 28 days.
2. Minimum Cementitious Materials Content: 520 lb/cu yd.
3. Maximum Water-Cementitious Materials Ratio: 0.45.
4. Aggregate size: nominal maximum aggregate size to be ASTM C33 number 57 (1-inch).
5. Slump Limit: three (3) inches or eight (8) inches for concrete with verified slump of two (2) to three (3) inches before adding high-range water-reducing admixture, plus or minus one (1) inch.
6. Air Content: Do not allow air content of troweled finished floors to exceed three (3) percent.

C. Concrete Subject to De-Icers: Proportion normal-weight concrete mixture as follows:
1. Minimum Compressive Strength: 5000 psi at 28 days.
2. Maximum Water-Cementitious Materials Ratio: 0.42.
3. Aggregate size: nominal maximum aggregate size to be ASTM C33 number 67 (3/4-inch).
4. Slump Limit: three (3) inches or eight (8) inches for concrete with verified slump of two (2) to three (3) inches before adding high-range water-reducing, plus or minus one (1) inch.
5. Air Content: six (6) percent, plus or minus 1.5 percent at point of delivery for 3/4-inch nominal maximum aggregate size.

2.08 MISCELLANEOUS ANCHORS

D. Dovetail Slots in Concrete: Furnish dovetail slots with filler strips, of slot size indicated, fabricated from galvanized steel sheet.

E. Anchor masonry veneers to concrete with masonry-veneer anchors to comply with the following requirements:

1. Corrugated dovetail brick tie and dovetail slot.

a. Hot dipped galvanized 1” wide 16 ga corrugated tie.
b. Hot dipped galvanized 24 ga dovetail slot.

PART 3 - EXECUTION

3.01 GENERAL

A. Coordinate the installation of joint materials, vapor retarder/barrier, and other related materials with placement of forms and reinforcing steel.

3.02 FORMS

A. Design, erect, support, brace, and maintain form work to support vertical and lateral, static, and dynamic loads that might be applied until such loads can be supported by concrete structure. Construct formwork so concrete members and structures are of correct size, shape, alignment, elevation, and position. Maintain formwork construction tolerances complying with ACI 347 limits:

1. Provide Class A tolerances for concrete surfaces exposed to view.
2. Provide Class C. tolerances for other concrete surfaces.

B. Fabricate forms for easy removal without hammering or prying against concrete surfaces. Provide crush plates or wrecking plates where stripping may damage cast concrete surfaces. Provide top forms for inclined surfaces where slope is too steep to place concrete with bottom forms only. Kerf wood inserts for forming keyways, reglets, recesses, and the like for easy removal.

C. Construct forms to sizes, shapes, lines, and dimensions shown, and to obtain accurate alignment, location, grades, level and plumb work in finished structures. Provide for openings, offsets, sinkages, keyways, recesses, blocking, screeds, bulkheads, anchorages and inserts, and other features required in work. Use selected materials to obtain required finishes. Solidly butt joints and provide back-up at joints to prevent leakage of cement paste.

D. Provide temporary openings for clean-outs and inspections where interior area of form work is inaccessible before and during concrete placement. Securely brace temporary openings and set tightly to forms to prevent losing concrete mortar. Locate temporary openings in forms at inconspicuous locations.

E. Chamfer exposed corners and edges using wood, metal, PVC, or rubber chamfer strips fabricated to produce uniform smooth lines and tight edge joints.

F. Provisions for Other Trades: Provide openings in concrete form work to accommodate work of other trades. Determine size and location of openings, recesses, and chases from trades providing such items. Accurately place and securely support items built into forms.

G. Cleaning and Tightening: Thoroughly clean forms and adjacent surfaces to receive concrete. Remove chips, wood, sawdust, dirt, or other debris just before concrete is placed. Retightening forms and bracing after concrete placement is required to eliminate mortar leaks and maintain proper alignment.

3.03 PLACING REINFORCEMENT

A. General: Comply with Concrete Reinforcing Steel Institute's recommended practice for "Placing Reinforcing Bars" for details and methods of reinforcement placement and

supports, and as herein specified.

1. Avoid cutting or puncturing vapor barrier/retarder during reinforcement placement and concreting operations. Repair damages before placing concrete.

B. Clean reinforcement of loose rust and mill scale, earth, ice, and other materials which reduce or destroy bond with concrete.

C. Accurately position, support, and secure reinforcement against displacement by formwork, construction, or concrete placement operations. Locate and support reinforcing by metal chairs, runners, bolsters, spacers, and hangers, as approved by the Owner.

D. Place reinforcement to obtain at least minimum coverages for concrete protection. Arrange, space, and securely tie bars and bar supports to hold reinforcement in position during concrete placement operations. Set wire ties so ends are directed into concrete, not toward exposed concrete surfaces.

3.04 JOINTS

A. Construction Joints: Locate and install construction joints as indicated or, if not indicated, locate so as not to impair strength and appearance of the structure, as acceptable to Owner.

B. Provide keyways at least 1-1/2" deep in construction joints in walls, slabs, and between walls and footings; accepted bulkheads designed for this purpose may be used for slabs.

C. Place construction joints perpendicular to main reinforcement. Continue reinforcement across construction joints, except as otherwise indicated. Do not continue reinforcement through sides of strip placements.

D. Waterstops: Provide waterstops in construction joints as indicated. Install waterstops to form continuous diaphragm in each joint. Make provisions to support and protect exposed waterstops during progress of work. Each piece of premolded waterstop shall be the maximum practicable length to limit the number of joints. Joint at intersections and at ends shall be made in accordance with the manufacturer's recommendations and shall develop effective water tightness equal to that of the continuous waterstop.

E. Isolation Joints in Slabs-on-Ground: Construct isolation joints in slabs-on-ground at points of contact between slabs-on-ground and vertical surfaces, such as column pedestals, foundation walls, grade beams, and elsewhere as indicated.

F. Contraction (Control) Joints in Slabs-on-Ground: Construct contraction joints in slabs-on-ground to form panels of patterns as shown. Use saw cuts 1/8" x 1/4 slab depth, or inserts 1/4 inch wide by on-fourth of the slab depth, unless otherwise indicated.

1. Form contraction joints by inserting premolded plastic, hardboard, or fiberboard strip into fresh concrete until top surface of strip is flush with concrete slab surface. Tool slab edges round on each side of insert. After concrete has cured, remove inserts and clean groove of loose debris.

2. Contraction joints in unexposed floor slabs shall be formed by saw cuts as soon as possible after slab finishing as may be safely done without dislodging aggregate.
3. If joint pattern is not shown, provide joints not exceeding 10', in either direction and located to conform to bay spacing wherever possible (at column centerlines, half bays, third-bays).

G. All exposed construction and contraction joints in slabs-on-grade shall be filled with the specified epoxy joint filler. Joint preparation and mixing and placing of the joint filler shall be in strict accordance with the directions of the manufacturer. Joints shall not be filled sooner than 90 days after slab placement. Carefully clean joints prior to filling with joint filler.

3.05 INSTALLATION OF EMBEDDED ITEMS

A. General: Set and build into work anchorage devices and other embedded items required for other work that is attached to, or supported by, cast-in-place concrete. Use setting drawings, diagrams, instructions, and directions provided by suppliers of items to be attached.

B. Thoroughly clean metal to be embedded in concrete of heavy rust scale, oil, paint, other foreign matter which would reduce its bond to concrete.

C. Permit subcontractors for other trades to install sleeves, inserts, plugs, etc., required for their work in forms before concrete is poured.

D. Provide anchors required to secure materials of other trades against concrete.

E. Edge Forms and Screed Strips for Slabs: Set edge forms or bulkheads and intermediate screed strips for slabs to obtain required elevations and contours in finished slab surface. Provide and secure units sufficiently strong to support types of screed strips by use of strike-off templates or accepted compacting type screeds.

3.06 PREPARING FORM SURFACES

A. General: Coat contact surfaces of forms with an approved, non-residual, low-VOC, form coating compound before placing reinforcement.

B. Do not allow excess form-coating material to accumulate in forms or come into contact with in-place concrete surfaces against which fresh concrete will be placed. Apply according to manufacturer's instructions.

1. Coat steel forms with a non-staining, rust-preventative material. Rust-stained steel formwork is not acceptable.

3.07 CONCRETE PLACEMENT

A. Convey concrete from mixer or truck to forms as rapidly as possible by methods which will prevent segregation or loss of ingredients. Place in forms as nearly as practicable to its final position. Thoroughly spade or tamp around reinforcing.

B. Preplacement Inspection: Before placing concrete, inspect and complete formwork installation, reinforcing steel, and items to be embedded or cast-in. Notify other crafts to permit installation of their work; cooperate with other trades in setting such work. Moisten wood forms immediately before placing concrete where form coatings are not used.

C. General: Comply with ACI 304 "Recommended Practice for Measuring, Mixing, Transporting, and Placing Concrete", and as herein specified.

D. Deposit concrete continuously or in layers of such thickness that no concrete will be placed on concrete which has hardened sufficiently to cause the formation of seams or planes of

weakness. If a section cannot be placed continuously, provide construction joints as herein specified. Deposit concrete as nearly as practicable to its final location to avoid segregation.

E. If concreting must be stopped before completing any particular section, build a keyed bulkhead in forms. Before continuing thoroughly dampen and apply the bonding compound. New concrete shall be placed only after the bonding compound has dried.

F. Placing Concrete in Forms: Deposit concrete in forms in horizontal layers not deeper than 24" and in a manner to avoid inclined construction joints. Where placement consists of several layers, place each layer while preceding layer is still plastic to avoid cold joints. When concrete is started, carry on as continuous operation until placing of section is completed. Cold joints will not be permitted.

1. Consolidate placed concrete by mechanical vibrating equipment supplemented by hand-spading, rodding, or tamping. Use equipment and procedures for consolidation of concrete in accordance with ACI 309.
2. Do not use vibrators to transport concrete inside forms. Insert and withdraw vibrators vertically at uniformly spaced locations not farther than visible effectiveness of machine. Place vibrators to rapidly penetrate placed layer and at least 6" into preceding layer. Do not insert vibrators into lower layers of concrete that have begun to set. At each insertion limit duration of vibration to time necessary to consolidate concrete and complete embedment of reinforcement and other embedded items without causing segregation of mix.

G. Placing Concrete Slabs: Deposit and consolidate concrete slabs in a continuous operation, within limits of construction joints, until the placing of a panel or section is completed.

1. Consolidate concrete during placing operations so that concrete is thoroughly worked around reinforcement and other embedded items and into corners.
2. Bring slab surfaces to correct level with straightedge and strikeoff. Use bull floats or darbies to smooth surface, free of humps or hollows. Do not disturb slab surfaces prior to beginning finishing operations.
3. Maintain reinforcing in proper position during concrete placement operations.

H. Cold Weather Placing: Protect concrete work from physical damage or reduced strength which could be caused by frost, freezing actions, or low temperatures, in compliance with ACI 306 and as herein specified.

1. When air temperature has fallen to or is expected to fall below 40 deg F (4 deg C), uniformly heat water and aggregates before mixing to obtain a concrete mixture temperature of not less than 50 deg F (10 deg C), and not more than 80 deg F (27 deg C) at point of placement.
3. Do not use frozen materials or materials containing ice or snow. Do not place concrete on frozen subgrade or on subgrade containing frozen materials.
4. Do not use calcium chloride, salt, and other materials containing antifreeze agents or chemical accelerators, unless otherwise accepted in mix designs.

I. Hot Weather Placing: When hot weather conditions exist that would seriously impair quality and strength of concrete, place concrete in compliance with ACI 305 and as herein specified.

1. Cool ingredients before mixing to maintain concrete temperature at time of placement below 90 deg F (32 deg C). Mixing water may be chilled, or chopped ice may be used to control temperature provided water equivalent of ice is calculated to

total amount of mixing water.

2. Cover reinforcing steel with water-soaked burlap if it becomes too hot, so that steel temperature will not exceed the ambient air temperature immediately before embedment in concrete.
3. Fog spray forms, reinforcing steel, and subgrade just before concrete is placed. Keep subgrade moisture uniform without puddles or dry areas.
4. Use water-reducing-retarding admixture (Type D) when required by high temperatures, low humidity, or other adverse placing conditions.

3.08 FINISH OF FORMED SURFACES

A. Rough Form Finish: For formed concrete surfaces not exposed-to- view in the finished work and not to receive any applied materials. This is the concrete surface having texture imparted by form facing material used. Patch and repair tie holes and defective areas. Rub down or chip off fins and other projections exceeding 1/4" in height.

B. Smooth Form Finish: Smooth Form Finish, as defined by ACI 301, shall be provided at concrete surfaces exposed-to-view, or that are to be covered with a coating material applied directly to concrete, or a covering material applied directly to concrete, such as waterproofing, dampproofing, veneer plaster, painting, or other similar system. This is finished cast-in- concrete surface obtained with selected form facing material, arranged orderly and symmetrically with a minimum of seams. The form facing material shall be supported by studs or other backing capable of preventing excessive deflections within tolerances defined in ACI 301. Material with raised grain, torn surfaces, worn edges, patches, dents, or other defects which will impair the texture of the concrete surface shall not be used. Repair and patch defective areas with fins or other projections completely removed and smoothed. Rub surfaces exposed-to-view smooth.

C. Related Unformed Surfaces: At tops of walls, horizontal offsets, and similar unformed surfaces occurring adjacent to formed surfaces, strike-off smooth and finish with a texture matching adjacent formed surfaces. Continue final surface treatment of formed surfaces uniformly across adjacent unformed surfaces, unless otherwise indicated.

3.09 MONOLITHIC SLAB FINISHES

A. Float Finish: Apply float finish to monolithic slab surface to receive trowel finish.

1. After screeding, consolidating, and leveling concrete slabs, do not work surface until ready for floating. Begin floating when surface water has disappeared or when concrete has stiffened sufficiently to permit operation of power-driven floats, or both. Consolidate surface with power-driven floats, or by hand-floating if area is small or inaccessible to power units. Cut down high spots and fill low spots. Uniformly slope surfaces to drains where required. Immediately after leveling, refloat surface to a uniform, smooth, granular texture.

C. Trowel Finish: Apply trowel finish to monolithic slab surfaces to be exposed-to-view.

1. After floating, begin first trowel finish operation using a power- driven trowel. Begin final troweling when surface produces a ringing sound as trowel is moved over surface. Consolidate concrete surface by final hand-troweling operation, free of trowel marks, uniform in texture and appearance, and with surface leveled to tolerances of F_F 20 - F_L 17, measured according to ASTM E 1155. Grind smooth surface defects which would telegraph through applied floor covering system.

D. Non-Slip Broom Finish: Apply non-slip broom finish to slabs for vehicular traffic, exterior

concrete slabs, platforms, steps, and ramps, and elsewhere as indicated.

1. Immediately after float finishing, slightly roughen concrete surface by brooming with fiber bristle broom perpendicular to main traffic route. Coordinate required final finish with Engineer before application.

3.10 MISCELLANEOUS CONCRETE ITEMS

A. Filling-In: Fill-in holes and openings left in concrete structures for passage of work by other trades, unless otherwise shown or directed, after work of other trades is in place. Mix, place, and cure concrete as herein specified, to blend with in-place construction. Provide other miscellaneous concrete filling shown or required to complete work.

B. Curbs: Provide monolithic finish to interior curbs by stripping forms while concrete is still green and steel-troweling surfaces to a hard, dense finish with corners, intersections, and terminations slightly rounded.

C. Equipment Bases and Foundations: Provide machine and equipment bases and foundations, as shown on drawings. Set anchor bolts for machines and equipment to template at correct elevations, complying with certified diagrams or templates of manufacturer furnishing machines and equipment.

D. Grout base plates and foundations as indicated, using specified non-shrink grout. Use non-metallic grout.

3.11 CONCRETE CURING AND PROTECTION

A. General: Protect freshly placed concrete from premature drying and excessive cold or hot temperatures. In hot, dry and windy weather protect concrete from rapid moisture loss before and during finishing operations with an evaporation-control material. Apply according to manufacturer's instructions after screeding and bull floating, but before power floating and troweling.

B. Start initial curing as soon as free water has disappeared from concrete surface after placing and finishing. Weather permitting, keep continuously moist for not less than 7 days.

C. Begin final curing procedures immediately following initial curing and before concrete has dried. Continue final curing for at least 7 days in accordance with ACI 301 procedures. Avoid rapid drying at end of final curing period.

D. Curing Methods: Perform curing of concrete by curing and sealing compound, by moist curing, by moisture-retaining cover curing, and by combinations thereof, as herein specified.

E. Provide moisture curing by following methods.

1. Keep concrete surface continuously wet by covering with water.
2. Use continuous water-fog spray.
3. Cover concrete surface with specified absorptive cover, thoroughly saturating cover with water and keeping continuously wet. Place absorptive cover to provide coverage of concrete surfaces and edges, with 4" lap over adjacent absorptive covers.

F. Provide moisture-cover curing as follows:

1. Cover concrete surfaces with moisture-retaining cover for curing concrete, placed in widest practicable width with sides and ends lapped at least 3" and sealed by waterproof tape of adhesive. Immediately repair any holes or tears during curing period using cover material and waterproof tape.

G. Apply curing and sealing compound to exposed interior slabs and to exterior slabs, walks, and curbs, as follows:

1. Apply specified curing and sealing compound to concrete slabs as soon as final finishing operations are complete (within 2 hours and after surface water sheen has disappeared). Apply uniformly in continuous operation by power-spray or roller in accordance with manufacturer's directions. Recoat areas subjected to heavy rainfall within 3 hours after initial application. Maintain continuity of coating and repair damage during curing period.
2. Do not use membrane curing compounds on any concrete surfaces which are to be covered with coating material applied directly to concrete, waterproofing, dampproofing, membrane roofing, painting, and other coatings and finish materials, including VCT, tile, etc., unless otherwise acceptable to Owner.

H. Curing Unformed Surfaces: Cure unformed surfaces, such as slabs, floor topping, and other flat surfaces by application of appropriate curing method.

1. Final cure concrete surfaces to receive finish flooring with a moisture-retaining cover, unless otherwise directed.

I. Curing Formed Surfaces: Cure formed concrete surfaces, including underside of beams, supported slabs and other similar surfaces, by moist curing with forms in place for the full curing period or until forms are removed. If forms are removed, continue curing by methods as specified above.

J. Sealer and Dustproofer: Apply a second coat of specified curing and sealing compound to surfaces.

K. Do not mark/layout on slabs with permanent markers. All slabs are exposed and should be kept clean.

3.12 REMOVAL OF FORMS

A. Form work not supporting weight of concrete, such as sides of beams, walls, columns, and similar parts of the work, may be removed after cumulatively curing at not less than 50 deg F (10 deg C) for 24 hours after placing concrete, provided concrete is sufficiently hard to not be damaged by form removal operations, and provided curing and protection operations are maintained.

B. If elsewhere required by the Owner, form work supporting weight of concrete, such as beam soffits, joists, slabs, and other structural elements, may not be removed in less than 14 days or until concrete has attained at least 75 percent of design minimum compressive strength at 28 days. Determine potential compressive strength of in-place concrete by testing field-cured specimens representative of concrete location or members.

C. Form facing material may be removed 4 days after placement, only if shores and other vertical supports have been arranged to permit removal of form facing material without loosening or disturbing shores and supports.

3.13 REUSING FORMS

A. Clean and repair surfaces of forms to be reused in the Work. Split, frayed or delaminated, or otherwise damaged form-facing material will not be acceptable for exposed surfaces. Apply new form-coating compound as specified for new form work.

B. When forms are extended for successive concrete placement, thoroughly clean surfaces, remove fins and laitence and tighten forms to close joints. Align and secure joints to avoid offsets. Do not use patched forms for exposed concrete surfaces except as acceptable to the Owner.

3.14 CONCRETE SURFACE REPAIRS

A. Patching Defective Areas: Repair and patch defective areas with cement mortar immediately after removal of forms, when acceptable to Owner.

1. Repair and patch with methods and visual effect approved by the Owner.

B. Mix dry-pack mortar, consisting of one part Portland cement to 2-1/2 parts fine aggregate passing a No. 16 mesh sieve, using only enough water as required for handling and placing.

1. Cut out honeycomb, rock pockets, voids over 1/4" in any dimension, and holes left by tie rods and bolts, down to solid concrete but, in no case to a depth of less than 1". Make edges of cuts perpendicular to the concrete surface. Thoroughly clean, dampen with water, and brush-coat the area to be patched with specified bonding agent. Place patching mortar after bonding compound has dried.
2. For surfaces exposed to view, blend white Portland cement and standard Portland cement so that, when dry, patching mortar will match surrounding color. Provide test areas at inconspicuous locations to verify mixture and color match before proceeding with patching. Compact mortar in place and strike-off slightly higher than surrounding surface.

C. Repair of Formed Surfaces: Remove and replace concrete having defective surfaces if defects cannot be repaired to satisfaction of Engineer. Surface defects, as such, include color and texture irregularities, cracks, spalls, air bubbles, honeycomb, rock pockets; fins and other projections on surface; and stains and other discolorations that cannot be removed by cleaning. Flush out form tie holes, fill with dry pack mortar, or precast cement cone plugs secured in place with bonding agent.

1. Repair concealed formed surfaces, where possible, that contain defects that affect the durability of concrete. If defects cannot be repaired, remove and replace concrete.

D. Repair of Unformed Surfaces: Test unformed surfaces, such as monolithic slabs, for smoothness and verify surface plane to tolerances specified for each surface and finish. Correct low and high areas as herein specified. Test unformed surfaces sloped to drain for trueness of slope, in addition to smoothness using a template having required slope.

1. Repair finished unformed surfaces that contain defects which affect durability of concrete. Surface defects, as such, include crazing, cracks in excess of 0.01" wide or which penetrate to reinforcement or completely through non-reinforced sections regardless of width, spalling, pop-outs, honeycomb, rock pockets, and other objectionable conditions.
2. Correct high areas in unformed surfaces by grinding, after concrete has cured at least 14 days.

3. Correct low areas in unformed surfaces during or immediately after completion of surface finishing operations by cutting out low areas and replacing with fresh concrete. Finish repaired areas to blend into adjacent concrete. Proprietary patching compounds may be used when acceptable to Engineer.
5. Repair defective areas, except random cracks and single holes not exceeding 1" diameter, by cutting out and replacing with fresh concrete. Remove defective areas to sound concrete with clean, square cuts and expose reinforcing steel with at least 3/4" clearance all around. Dampen concrete surfaces in contact with patching concrete and apply bonding compound. Mix patching concrete of same materials to provide concrete of same type or class as original concrete. Place, compact, and finish to blend with adjacent finished concrete. Cure in same manner as adjacent concrete.

E. Repair isolated random cracks and single holes not over 1" in diameter by dry-pack method. Groove top of cracks and cut-out holes to sound concrete and clean of dust, dirt, and loose particles. Dampen cleaned concrete surfaces and apply bonding compound. Mix dry-pack, consisting of one part Portland cement to 2-1/2 parts fine aggregate passing a No. 16 mesh sieve, using only enough water as required for handling and placing. Place dry pack after bonding compound has dried. Compact dry-pack mixture in place and finish to match adjacent concrete. Keep patched area continuously moist for not less than 72 hours.

F. Perform structural repairs with prior approval of Owner for method and procedure, using specified epoxy adhesive and mortar.

G. Repair methods not specified above may be used, subject to acceptance of Owner..

3.15 QUALITY CONTROL TESTING DURING CONSTRUCTION

A. The Owner will employ a testing laboratory to perform tests and to submit test reports.

B. The Testing Laboratory will analyze the proposed concrete design mix and sample and test aggregate and concrete as follows:

1. Fine aggregate tests: organic content, sieve analysis, fineness modulus.
2. Coarse aggregate tests: sieve analysis.
3. Mix design: refer to this Section for requirements and submittal format.

C. Sampling and testing for quality control during concrete placement may include the following, as directed by the Owner.

1. Sampling Fresh Concrete: ASTM C 172, except modified for slump to comply with ASTM C 94

a. Slump: ASTM C 143; one test for each 100 cubic yards, or fraction thereof, at point of discharge for each day's pour of each type of concrete; additional tests when concrete consistency seems to have changed.
b. Air Content: ASTM C 173, volumetric method for lightweight or normal weight concrete; ASTM C 231 pressure method for normal weight concrete; one for each day's pour of each type of air- entrained concrete.
c. Water/Cement Ratio.
d. Concrete Temperature: Test hourly when air temperature is 40 deg F (4 deg C) and below, and when 80 deg F (27 deg C) and above; and each time a set of compression test specimens made.
e. Compression Test Specimen: ASTM C 31; one set of 4 standard cylinders for each compressive strength test, unless otherwise directed. Mold and store

cylinders for laboratory cured test specimens except when field-cure test specimens are required.

f. Compressive Strength Tests: ASTM C 39; one set for each day's pour exceeding 5 cu. yds. plus additional sets for each 50 cu. yds. over and above the first 25 cu. yds. of each concrete class placed in any one day; one specimen tested at 7 days, two specimens tested at 28 days, and one specimen retained in reserve for later testing if required.

2. When frequency of testing will provide less than 5 strength tests for a given class of concrete, conduct testing from at least 5 randomly selected batches or from each batch if fewer than 5 are used.
3. When total quantity of a given class of concrete is less than 50 cu. yd., the Owner may waive strength testing if adequate evidence of satisfactory strength is provided.
4. When strength of field-cured cylinders is less than 85 percent of companion laboratory-cured cylinders, evaluate current operations and provide corrective procedures for protecting and curing the in-place concrete.
5. Strength level of concrete will be considered satisfactory if averages of sets of three consecutive strength test results equal or exceed specified compressive strength, and no individual strength test result falls below specified compressive strength by more than 500 psi.

D. Test results will be reported in writing to Owner, Engineer, and Contractor within 24 hours after tests. Reports of compressive strength tests shall contain the project identification name and number, date of concrete placement, name of concrete testing service, concrete type and class, location of concrete batch in structure, design compressive strength at 28 days, concrete mix proportions and materials; compressive breaking strength and type of break for both 7-day tests and 28-day tests.

E. Non-Destructive Testing: Impact hammer, sonoscope, or other non-destructive device may be permitted but shall not be the sole basis for acceptance or rejection.

F. Additional Tests: The testing service will make additional tests of in-place concrete when test results indicate specified concrete strengths and other characteristics have not been attained in the structure, as directed by Engineer. Testing service may conduct tests to determine adequacy of concrete by cored cylinders complying with ASTM C 42, or by other methods as directed. Contractor shall pay for such tests when unacceptable concrete is verified.

G. Reinforcing: The testing service will inspect the location and installation details of reinforcing steel for compliance with the approved drawings, specifications and ACI 318.

END OF SECTION 03 30 00

SECTION 03 35 43 - POLISHED CONCRETE FINISHING

PART 1 GENERAL

1. 01 SUMMARY

A. Section Includes:
   1. Grinding and honing of the slab surface to receive clear reactive, penetrating liquid hardener/densifier to interior concrete.
   2. Application of clear reactive, penetrating liquid hardener.
   3. Progressively polishing and burnishing of the slab surface to achieve Finish Requirements.
   4. Application of stain resistant surface treatment.
B. Related Requirements:
   1. Section 03 30 00- Cast-in-Place Concrete.
   2. Section 07 90 00- Joint Sealants.

1.02 REFERENCES

A. The date of the standard is that in effect as the date of receipt of bids for the project
B. Scientific Certification System (SCS) Indoor Air Quality Gold Certification.
C. NSF International/Nonfood Compound Registration.
D. American Concrete Institute (ACI) – Specification for Polished Concrete Slab Finishes ACI 310.1-20.
E. American National Standard Institute / National Floor Safety Institute
   1. ANSI/NSFI B101.1 Test Method for Measuring Wet SCOF of Common Hard-Surface Floor Materials.
   2. ANSI B101.3-Test Method for Measuring Wet DCOF of Common Hard-Surface Floor Materials.
F. American Society of Concrete Contractors (ASCC).
G. ASTM International (ASTM):
   1. C1028 - Standard Test Method for Determining the Static Coefficient of Friction of Ceramic Tile and Other Like Surfaces by the Horizontal Dynamometer Pull-Meter Method.
   2. C1353 – Standard Test Method for Abrasion Resistance of Dimension Stone Subjected to Foot Traffic Using a Rotary Platform, Double-Head Abraser
   3. D523- Standard Test Method for Specular Gloss.
   4. D1308 - Standard Test Method for Effect of Household Chemicals on Clear and Pigmented Organic Finishes.
   5. D4541 - Standard Test Method for Pull-Off Strength of Coatings Using Portable Adhesion Testers.
   6. E96/96M Method B (Water Method) - Standard Test Methods for Water Vapor Transmission of Materials.
   7. G154 -Standard Practice for Operating Fluorescent Ultraviolet (UV) Lamp Apparatus for Exposure of Nonmetallic Materials.

1.03 ADMINISTRATIVE REQUIREMENTS

A. Pre-Installation Meeting: Convene before the start of work on new concrete slabs, patching of [existing] concrete slabs and start of application of concrete finish system.
   1. Require attendance of parties directly affecting work of this Section, including the Owner's Representative, Contractor, Architect, concrete installer, and applicator. Meeting should only convene when required parties are present.
   2. Review the following:

a. Physical requirements of completed concrete slab and slab finish.
b. Locations and time of test areas.
c. Protection of surfaces not scheduled for finish application.
d. Surface preparation.
e. Application procedure.
f. Quality control.
g. Cleaning.
h. Protection of finish system.
i. Coordination with other work.

1.04 SUBMITTALS

A. Product Data:
   1. Submit manufacturer's product data sheets and tested physical and performance properties on products to be used for the work.
B. VOC Certification: Submit certification that products furnished comply with regulations controlling use of volatile organic compounds (VOC).
C. Certificates:
   1. Certificates by manufacturer stating that installer is listed applicator of special concrete finishes, and has completed the necessary training programs.
D. Floor Protection Plan.

1.05 QUALITY ASSURANCE

A. Installer Qualifications:
   1. Concrete Polishing Council (CPC) Craftsman Supervisor or equivalent on site during work.
   2. Applicator to be familiar with the specified requirements and the methods needed for proper performance of work of this section. Applicator must have availability of proper equipment to perform work within scope of this project on a timely basis. Applicator should have successfully performed a minimum of 5 projects of similar scope and complexity.
A. Inspection and testing: Cooperate and coordinate with the Owner's inspection and testing agency.
   1. Personnel performing field tests shall conform to ACI 310.1.
   2. Dynamic Coefficient of Friction Testing:
      a. Preparation: Begin DCOF testing only after cleaning the floor surface with a non-etching cleaner to remove topical coatings and contaminants. Allow test surfaces to dry completely.
      b. Test Method: Test DCOF on wet slab surface with 0.05% surfactant in accordance with the requirements of ANSI A 326.3 using BOT3000E equipment.
   3. Slab Aesthetics Testing: Record measurements of Distinction of Image (DOI), Gloss, and Haze at time of mock-up
      a. Test Methods:
         1) Test DOI in accordance with the requirements of ASTM D 5767 using the Rhopoint IQ GM14400 instrumentation.
      b. Measure DOI in locations adjacent to the location of the DCOF measurement.
B. Mock-up: On-site, prior to the start of the polished concrete finishing process.
   1. Require attendance of parties directly affecting work of this Section, including the Contractor, Architect, applicator, and Owner's Representative.
   2. Notify the above parties one week in advance of date and time when mock-up will be completed.
   3. Demonstrate the materials, equipment and application methods to be used for work specified herein in a pre-approved location approximately 50 sq. ft. in area or as directed by [Architect][Owner's Representative].

4. Retain approved mock-up during construction as a standard for judging the completed work. Areas may remain as part of the completed work.

1.06 DELIVERY, STORAGE, AND HANDLING

A. Deliver materials in original containers, with seals unbroken, bearing manufacturer labels indicating brand names and directions for storage.
B. Store concrete hardener/densifier and surface protectant treatment in environment recommended on published manufacturer's product data sheets.
   1. Store containers upright in a cool, dry, well-ventilated place, out of the sun, with temperature between 40 and 100 degrees Fahrenheit (4 and 38 degrees Celsius).
   2. Protect from freezing.
   3. Store away from other chemicals and potential sources of contamination.
   4. Keep lights, fire, sparks, and heat away from containers.
   5. Do not drop containers or slide across sharp objects.
   6. Do not stack pallets more than three high.
   7. Keep containers tightly closed when not in use.

1.07 FIELD CONDITIONS

A. Environmental limitations:
   1. Comply with manufacturer's written instructions for substrate temperature and moisture content, ambient temperature and humidity, ventilation, and other conditions affecting performance and finishing requirements.
B. Close areas to traffic during floor application and after application for time period recommended in writing by manufacturer.
C. Protect the completed slab to prevent damage by the other trades during floor completion.
D. Temperature Limitations:
   1. Apply when surface and air temperature are between 40 degrees Fahrenheit (4 degrees Celsius) and 95 degrees Fahrenheit (35 degrees Celsius) unless otherwise indicated by manufacturer's written instructions.
   2. Apply when surface and air temperatures are expected to remain above 40 degrees Fahrenheit (4 degrees Celsius) for a minimum of 8 hours after application unless otherwise indicated by manufacturer's written instructions.
E. Apply when air conditions are calm to minimize surface treatment contacting surface not intended to be finished.
F. Do not apply to frozen substrate. Allow adequate time for substrate to thaw if freezing conditions exist before application.
G. Apply a minimum of 24 hours after rain event. Suspend application when rain is anticipated for a period of 8 hours after application, unless otherwise indicated by manufacturer's written instructions.
H. Temporary Heat: Ambient temperature of 50 degrees Fahrenheit (10 degrees Celsius) minimum.
I. Ventilation: Provide adequate ventilation in confined or enclosed areas in accordance with manufacturer's instructions.

PART 2 PRODUCTS

2.01 MANUFACTURERS

A. Substitutions: In accordance with Section 01 25 00 – Substitution Procedures.

2.02 MATERIALS

A. Clear, water-based, blended surfactant cutting aid: Product used to extend the life of diamond tooling and minimize concrete surface scratches during the wet-grinding process.

1. Product: Consolideck First Cut manufactured by PROSOCO, Inc., Lawrence, KS, (800) 255-4255, www.prosoco.com.
2. Subject to compliance with the following requirements:
   a. Comply with national, state and district AIM VOC regulations and contains 0.5 g/L or less.

B. Liquid Concrete Repair Material: Low-odor, liquid fill material used to fill pinholes, small air voids and pop-outs, micro-cracks, and other gaps in concrete surface during grinding.
1. Product: Consolideck Grind-N-Fill manufactured by PROSOCO, Inc., Lawrence, KS, (800) 255-4255, www.prosoco.com.
2. Subject to compliance with the following requirements:
   a. Comply with national, state and district AIM VOC regulations and contain 100 g/L or less.

C. Pre-Densifier Concrete Cleaner: Cleaner to remove dirt, oil, grease, and other stains from existing slab surface.
1. Product: Consolideck Cleaner/Degreaser manufactured by PROSOCO, Inc., Lawrence, KS, (800) 255-4255, www.prosoco.com.

D. Penetrating Concrete Hardener/Densifier: Lithium silicate hardener/densifier.
1. Product: Consolideck LS, manufactured by PROSOCO, Inc., Lawrence, KS, (800) 255-4255, www.prosoco.com.
2. Subject to compliance with the following requirements:
   a. Recipient of Scientific Certification System (SCS) Indoor Air Quality Gold Certification.
   b. Comply with national, state and district AIM VOC regulations and contain 50 g/L or less.
   c. Registered as an approved NSF International/Nonfood Compound Registration.
   d. Abrasion Resistance: Greater than 50 percent improvement over untreated samples when tested in accordance with ASTM C1353.
   e. Achieve ‘High Traction Range’ readings when tested in accordance with ANSI B101.1 and ANSI B101.3.
   f. Coefficient of Friction: Greater than 0.60 dry, Greater than 0.60 wet when tested in accordance with ASTM C1028.
   g. Adhesion: Greater than10 percent increase in pull-off strength when compared to an untreated sample when tested in accordance with ASTM D4541.
   h. Water Vapor Transmission: 100 percent retained when compared to untreated samples when tested in accordance with ASTM E96/96M Method B (Water Method).
   i. UV Stability: No degradation or yellowing of material when tested in accordance with ASTM G154.

E. Interior Concrete Protective Treatments:
1. General Purpose high-gloss film forming premium sealer, lithium silicate hardener/densifier.
   a. Product: Consolideck LSGuard, manufactured by PROSOCO, Inc., Lawrence, KS, (800) 255-4255, www.prosoco.com.
   b. Subject to compliance with the following requirements:
      i. Recipient of Scientific Certification System (SCS) Indoor Air Quality Gold Certification.
      ii. Comply with national, state and district AIM VOC regulations.
      iii. Registered as an approved NSF International/Nonfood Compound Registration.
      iv. Achieve ‘High Traction Range’ readings when tested in accordance with ANSI B101.1 and ANSI B101.3.
      v. Coefficient of Friction: Greater than 0.60 dry, greater than0.60 wet when tested in accordance with ASTM C1028.
      vi. Adhesion: Greater than 10 percent increase in pull-off strength when compared to an untreated sample when tested in accordance with ASTM D4541.
      vii. Stain Resistance: Achieve limited or no adverse effects when tested in accordance with ASTM D1308
      viii. UV Stability: No degradation or yellowing of material when tested in accordance with ASTM G154.
2. General Purpose medium gloss, film forming sealer.
   a. Product: Consolideck PolishGuard, manufactured by PROSOCO, Inc., Lawrence, KS, (800) 255-4255, www.prosoco.com.
   b. Subject to compliance with the following requirements:

i. Recipient of Scientific Certification System (SCS) Indoor Air Quality Gold Certification.
ii. Comply with national, state and district AIM VOC regulations.
iii. Achieve 'High Traction Range' readings when tested in accordance with ANSI B101.1 and ANSI B101.3.
iv. Coefficient of Friction: Greater than0.60 dry, Greater than 0.60 wet when tested in accordance with ASTM C1028.
v. Stain Resistance: Achieve limited or no adverse effects when tested in accordance with ASTM D1308.
vi. UV Stability: No degradation or yellowing of material when tested in accordance with ASTM G154.

3. Solvent-based, penetrating clear sealer with a VOC content of 100 g/L or less shall resist oil and food stains and repel water and water-related stains.
   a. Product: Consolideck Concrete Protector SB, manufactured by PROSOCO, Inc., Lawrence, KS, (800) 255-4255, www.prosoco.com.
   b. Subject to compliance with the following requirements:
      i. Comply with national, state and district AIM VOC regulations.
      ii. Achieve 'High Traction Range' readings when tested in accordance with ANSI B101.1 and ANSI B101.3.
      iii. Stain Resistance: Achieve limited or no adverse effects when tested in accordance with ASTM D 1308.
      iv. UV Stability: No degradation or yellowing of material when tested in accordance with ASTM G154.

2.03 EQUIPMENT

A. Conform to ACI 310.1 Part 2.2, except where more stringent requirements are specified below.
B. Auto Scrubber Machine: For cleaning operations.
C. Hand Grinder or stand-up edger for edge grinding/polishing.
D. Grinding/Polishing Equipment:
   1. Dry grinding/polishing machines shall include a dust extraction system, including HEPA filtration vacuum.
E. Diamond Segments:
   1. Use heads from the same manufacturers throughout the entirety of the project.
F. Diamond Heads Types:
   1. Metal Diamonds: 80 or 150.
   2. Hybrid Style Diamonds: 50 or 100.
   3. Resin Bonded, Phenolic Diamonds: 100, 200, 400, 800, 1500, and 3000 (if necessary).
G. Burnishing Machine and Burnishing Pads to produce specified results.
   1. Burnishing Machine: High speed burnisher, generating pad speeds of 1,500 RPM or higher, as recommended by protective treatment manufacturer. Dust skirt must be installed at time of work.
   2. Burnishing Pads: as recommended by protective treatment manufacturer.
      a. White Burnishing Pad, non-abrasive.
      b. Consolideck Heat Pad manufactured by PROSOCO, Inc., Lawrence, KS, (800) 255-4255, www.prosoco.com.

PART 3 EXECUTION

3.01 EXAMINATION

A. Examine substrate with installer present for conditions affecting performance of finish. Correct conditions detrimental to timely and proper work. Notify the Architect in writing of conditions detrimental to the proper and timely completion of the work.

B. Do not begin installation until all unsatisfactory conditions are resolved. Beginning work constitutes acceptance of site conditions and responsibility for defective installation caused by prior observable conditions.

3.02 PREPARATION

A. Clean dirt, dust, oil, grease and other contaminants that interfere with penetration or performance of specified product from surfaces. Use appropriate concrete cleaners approved by the concrete surface treatment manufacturer where necessary. Rinse thoroughly using pressure water spray to remove cleaner residues. Allow surfaces to dry completely before application of product.
B. Repair, patch and fill cracks, voids, defects and damaged areas in surface as approved by the Architect. Allow repair materials to cure completely before application of product.
C. Variations in substrate texture and color will affect final appearance and should be corrected prior to application of sealer/hardener system and the polishing steps.
D. Protect surrounding areas prior to application. If product is accidentally misapplied to adjacent surfaces, flush with water immediately before material dries.
E. Avoid contact in areas not to be treated. Avoid contact with metal, glass and painted surfaces.
F. Seal open joints in accordance with Section 07 90 00.
G. Apply specified sealants and caulking and allow complete curing before application of penetrating concrete hardener/densifier.
H. Do not proceed until unsatisfactory conditions have been corrected.

3.03 CONCRETE GRINDING, HONING, AND POLISHING

A. Adhere to industry standard and conform to ACI 310.1 for grinding, honing, and polishing procedures for dry and wet grinding and honing, except where more stringent requirements are specified below.
B. Scrub and rinse slab surface with clean water and vacuum with auto-scrubber between and after final passes.
C. Sequential progression of diamond tooling steps shall be required and limited to no more than double the grit value of the previous diamonds used.
D. Overlap adjacent passes by 25 percent.
E. Perform each pass perpendicular to the other pass north/south then east/west; multiple passes may be needed.
F. Progressively grind, hone and polish the slab surface utilizing approved diamond segments as necessary to produce Finishing requirements.
    1. Apply liquid concrete repair material to fill gaps, voids and pop-outs during grinding operation per manufacturer’s published recommendations.

    2. Apply cutting aid chemical during the initial wet grinding process per manufacturer’s published recommendations. (Typically before the 200 grit resin or lower).

3.04 APPLICATION OF PENETRATING CONCRETE HARDENER/DENSIFIER

A. Apply hardener/densifier at the rate of 500 to 700 square feet per gallon with a low pressure sprayer fitted with a 0.5 gpm spray tip. (Typically after 200-grit and no later than 400 grit).
B. Apply sufficient material to keep concrete surface wet for 5 to 10 minute period, without producing puddles.
C. Allow treated surface to dry.
D. Continue progressively polishing floor with required resin diamonds as necessary to produce desired final finish.

3.05 APPLICATION OF INTERIOR CONCRETE PROTECTIVE TREATMENT

A. Application of general purpose, high gloss protective treatment:

1. Apply per manufacturer's published recommendations to clean, dry slab at the completion of mechanically polishing the slab surface.
2. Lightly wet a clean microfiber pad with protective treatment and wring out excess, leaving the pad damp.
3. Working from one control joint to another, apply a light, fine spray of protective treatment to a small section of the floor using a clean, pump-up sprayer fitted with a 0.5 gpm spray tip, at an estimated coverage rate of 2000 to 3000 square feet per gallon.
4. Using the damp microfiber pad and firm downward pressure, immediately spread the protective treatment to produce a thin, even coating. Spread the product as far as possible while maintaining a wet edge. Properly applied, protective treatment dries quickly. Stop spreading once drying begins. Avoid overlapping.
5. Allow to dry tack free, typically 20 to 60 minutes.
6. Once dry, high- speed burnish slab surface fitted with manufacturer recommended burnishing pad to increase gloss and to help the treatment fuse and bond with the concrete for increased durability and longevity. Surface temperatures immediately behind the burnisher must achieve 90.5 degrees Fahrenheit. (Burnish between coats if multiple applications are desired.)
7. Repeat above steps 1 through 6, as necessary for additional applications of protective treatment, to achieve desired final finish (Maximum 3 coats).

B. Application of general purpose, medium gloss protective treatment:
1. Apply per manufacturer's published recommendations to clean, dry slab at the completion of mechanically polishing the slab surface.
2. Lightly wet a clean microfiber pad with general purpose, medium gloss protective treatment and wring out excess, leaving the pad damp.
3. Spray-apply protective treatment using a clean, pump-up sprayer fitted with a 0.5 gpm conical or fan spray tip at an estimated coverage rate of 400 to 800 square feet per gallon. Work from one control joint to another.
4. Spread with the damp microfiber pad. Maintain a thin, even coating and wet edge. Stop spreading once drying begins. Do not overlap. Repeat steps 1 through 4. Two coats are recommended for maximum protection.
5. To increase gloss, wait at least 60 minutes after the final coat is applied, then use a high-speed burnisher fitted with a white polishing pad. Burnish at a fast walking pace.

C. Application of (low gloss with burnishing) solvent-based, penetrating oil, water and food stain protective treatment with a VOC content of 100 g/L or less:
1. Apply per manufacturer's published recommendations to clean, dry slab at the completion of mechanically polishing the slab surface.
2. Lightly wet a clean microfiber pad with protective treatment, leaving the pad damp.
3. Using a clean, pump-up sprayer, and working from one control joint to another, apply a light, fine spray to a small section of the floor. Apply per manufacturer's published recommended application rate.
4. Using the damp microfiber pad and firm downward pressure, immediately spread protective treatment to produce a thin, even application. Spread the product as far as possible while maintaining a wet edge.
5. Allow to dry tack free, typically 60–90 minutes.
6. Two coats are recommended for maximum protection. Repeat steps 1 through 4.
7. To remove any subsequent haze or for a high-gloss finish, wait until the final coat is dry, a minimum of 4 hours, then use a high- speed burnisher fitted with a PROSOCO heat polishing pad or 1500–3000 grit diamond polishing pad.

3.06 SLAB PROTECTION

A. Comply with provisions of ACI 310.1 specification for slab protection, except where more stringent requirements are specified below.
B. Protect finished floors to prevent damage including staining, gouges and scratching by construction traffic and activities until possession.
C. Do not drag or drop equipment or material across the slab which will scratch or chip it.

D. Inspect tires for debris prior to use on slab. Remove embedded items which may cause damage to floor slab.
E. Clean up spills on slab immediately. Provide cleaning chemicals and absorptive materials.
F. Develop a concrete protection procedure which addresses the following procedures:
   1. Communication of protection plan to subcontractors and vendors.
   2. Procedures for cleaning up slab spills, including use of and availability of cleaning chemicals and absorptive materials at Site.
G. Provide a clean slab surface using concrete maintenance cleaner within an auto scrubber, equipped with soft nylon brushes, in accordance with manufacturer's published recommendations.

3.07 FINISHING REQUIREMENTS

A. Appearance:
   1. Interior exposed finished slab areas must consist of the following:
      a. Slab surface must meet the desired sheen, as discussed in Pre-Installation meeting and be consistent with approved Mock-up.
      b. Slab surface must have a consistent look and exhibit a finish that has no evidence of streaking or burnish marks.
      c. White residue or hazy appearance is not acceptable.
      d. Exposure of aggregate ACI 310.1 Table 3.2.3.1, Aggregate Exposure Class C-Medium Aggregate.
   2. Interior exposed finished slab areas must consist of the following CPAA Gloss Level:
      a. Interior exposed finished slab areas must meet the ACI 310.1 Table 3.2.4.1- Appearance levels for distinctness of image (DOI) Level 3.

END OF SECTION

SECTION 03 35 43.13 - POLISHED AND DYED CONCRETE FINISHING

PART 1 GENERAL

1. 01 SUMMARY

A. Section Includes:
   1. Grinding of the slab surface to receive clear reactive, penetrating liquid hardener/densifier.
   2. Application of clear reactive, penetrating liquid hardener and concrete dye.
   3. Progressively polishing and burnishing of the slab surface to achieve Finish Requirements.
   4. Application of stain resistant surface treatment.
B. Related Requirements
   1. Section 03 30 00- Cast-in-Place Concrete.
   2. Section 07 90 00- Joint Sealants.

1.02 REFERENCES

A. The date of the standard is that in effect as the date of receipt of bids for the project.
B. Scientific Certification System (SCS) Indoor Air Quality Gold Certification.
C. NSF International/Nonfood Compound Registration.
D. American Concrete Institute (ACI) – Specification for Polished Concrete Slab Finishes ACI 310.1-20.
E. American National Standard Institute / National Floor Safety Institute:
   1. ANSI/NSFI B101.1 Test Method for Measuring Wet SCOF of Common Hard-Surface Floor Materials.
   2. ANSI B101.3-Test Method for Measuring Wet DCOF of Common Hard-Surface Floor Materials.
F. American Society of Concrete Contractors (ASCC).
G. ASTM International (ASTM):
   1. C1028 - Standard Test Method for Determining the Static Coefficient of Friction of Ceramic Tile and Other Like Surfaces by the Horizontal Dynamometer Pull-Meter Method.
   2. C1353 – Standard Test Method for Abrasion Resistance of Dimension Stone Subjected to Foot Traffic Using a Rotary Platform, Double-Head Abraser
   3. D523- Standard Test Method for Specular Gloss.
   4. D1308 - Standard Test Method for Effect of Household Chemicals on Clear and Pigmented Organic Finishes.
   5. D4541 - Standard Test Method for Pull-Off Strength of Coatings Using Portable Adhesion Testers.
   6. E96/96M Method B (Water Method) - Standard Test Methods for Water Vapor Transmission of Materials.
   7. G154 -Standard Practice for Operating Fluorescent Ultraviolet (UV) Lamp Apparatus for Exposure of Nonmetallic Materials.

1.03 ADMINISTRATIVE REQUIREMENTS

A. Pre-Installation Meeting: Convene before the start of work on new concrete slabs, patching of existing concrete slabs and start of application of concrete finish system.
   1. Require attendance of parties directly affecting work of this Section, including the Owner's Representative, Contractor, Architect, concrete installer, and applicator. Meeting should only convene when required parties are present.
   2. Review the following:
      a. Physical requirements of completed concrete slab and slab finish.

b. Locations and time of test areas.
c. Protection of surfaces not scheduled for finish application.
d. Surface preparation.
e. Application procedure.
f. Final appearance of dyed concrete.
g. Quality control.
h. Cleaning.
i. Protection of finish system.
j. Coordination with other work.

1.04 SUBMITTALS

A. Product Data:
   1. Submit manufacturer's product data sheets and tested physical and performance properties on products to be used for the work.
B. VOC Certification: Submit certification that products furnished comply with regulations controlling use of volatile organic compounds (VOC).
C. Certificates:
   1. Certificates by manufacturer stating that installer is listed applicator of special concrete finishes, and has completed the necessary training programs.
D. Floor Protection Plan.

1.05 QUALITY ASSURANCE

A. Installer Qualifications:
   1. Concrete Polishing Council (CPC) Craftsman Supervisor or equivalent on site during work.
   2. Applicator to be familiar with the specified requirements and the methods needed for proper performance of work of this section. Applicator must have availability of proper equipment to perform work within scope of this project on a timely basis. Applicator should have successfully performed a minimum of 5 projects of similar scope and complexity.
B. Inspection and testing: Cooperate and coordinate with the Owner's inspection and testing agency.
   1. Personnel performing field tests shall conform to ACI 310.1.
   2. Dynamic Coefficient of Friction Testing:
      a. Preparation: Begin DCOF testing only after cleaning the floor surface with a non-etching cleaner to remove topical coatings and contaminants. Allow test surfaces to dry completely.
      b. Test Method: Test DCOF on wet slab surface with 0.05% surfactant in accordance with the requirements of ANSI A 326.3 using BOT3000E equipment.
   3. Slab Aesthetics Testing: Record measurements of Distinction of Image (DOI), Gloss, and Haze at time of mock-up.
      a. Test Methods:
         1) Test DOI in accordance with the requirements of ASTM D 5767 using the Rhopoint IQ GM14400 instrumentation.
      b. Measure DOI in locations adjacent to the location of the DCOF measurement.
C. Mock-up: On site, prior to the start of the polished concrete finishing process.
   1. Require attendance of parties directly affecting work of this Section, including the Contractor, Architect, applicator, and Owner's Representative.
   2. Notify the above parties one week in advance of date and time when mock-up will be completed.
   3. Demonstrate the materials, equipment and application methods to be used for work specified herein in pre-approved location approximately 50 sq. ft. in area or as directed by the [Architect][Owner's Representative].

4. Retain approved mock-up during construction as a standard for judging the completed work. Areas may remain as part of the completed work.

1.06 DELIVERY, STORAGE AND HANDLING

A. Deliver materials in original containers, with seals unbroken, bearing manufacturer labels indicating brand name and directions for storage.
B. Store concrete hardener/densifier and surface protectant treatment in environment recommended on published manufacturer's product data sheets.
   1. Store containers upright in a cool, dry, well-ventilated place, out of the sun with temperature between 40 and 100 degrees Fahrenheit (4 and 38 degrees Celsius).
   2. Protect from freezing.
   3. Store away from other chemicals and potential sources of contamination.
   4. Keep lights, fire, sparks and heat away from containers.
   5. Do not drop containers or slide across sharp objects.
   6. Do not stack pallets more than three high.
   7. Keep containers tightly closed when not in use.

1.07 FIELD CONDITIONS

A. Environmental limitations:
   1. Comply with manufacturer's written instructions for substrate temperature and moisture content, ambient temperature and humidity, ventilation, and other conditions affecting performance and finishing requirements.
B. Close areas to traffic during floor application and after application for time period recommended in writing by manufacturer.
C. Protect the completed slab to prevent damage by the other trades during floor completion.
D. Temperature Limitations:
   1. Apply when surface and air temperature are between 40 degrees Fahrenheit (4 degrees Celsius) and 95 degrees Fahrenheit (35 degrees Celsius) unless otherwise indicated by manufacturer's written instructions.
   2. Apply when surface and air temperatures are expected to remain above 40 degrees Fahrenheit (4 degrees Celsius) for a minimum of 8 hours after application unless otherwise indicated by manufacturer's written instructions.
E. Apply when air conditions are calm to minimize surface treatment contacting surface not intended to be finished.
F. Do not apply to frozen substrate. Allow adequate time for substrate to thaw, if freezing conditions exist before application.
G. Apply a minimum of 24 hours after rain event. Suspend application when rain is anticipated for a period of 8 hours after application, unless otherwise indicated by manufacturer's written instructions.
H. Temporary Heat: Ambient temperature of 50 degrees Fahrenheit (10 degrees Celsius) minimum.
I. Ventilation: Provide adequate ventilation in confined or enclosed areas in accordance with manufacturer's instructions.

PART 2 PRODUCTS

2.01 MANUFACTURERS

A. Substitutions: Approved equal and in accordance with Section 01 25 00 – Substitution Procedures.

2.02 MATERIALS

A. Clear, water-based, blended surfactant cutting aid: Product used to extend the life of diamond tooling and minimize concrete surface scratches during the wet-grinding process.
   1. Product: Consolideck First Cut manufactured by PROSOCO, Inc., Lawrence, KS, (800) 255-4255, www.prosoco.com.
   2. Subject to compliance with the following requirements:
      a. Comply with national, state and district AIM VOC regulations and contains 0.5 g/L or less.
B. Liquid Concrete Repair Material: Low-odor, liquid fill material used to fill pinholes, small air voids and pop-outs, micro-cracks and other gaps in concrete surface during grinding.
   1. Product: Consolideck Grind-N-Fill manufactured by PROSOCO, Inc., Lawrence, KS, (800) 255-4255, www.prosoco.com.
   2. Subject to compliance with the following requirements:
      a. Comply with national, state and district AIM VOC regulations and contain 100 g/L or less.
C. Pre-Densifier Concrete Cleaner: Cleaner to remove dirt, oil, grease, and other stains from existing slab surface.
   1. Product: Consolideck Cleaner/Degreaser manufactured by PROSOCO, Inc., Lawrence, KS, (800) 255-4255, www.prosoco.com.
D. Penetrating Concrete Hardener/Densifier: Lithium silicate hardener/densifier.
   1. Product: Consolideck LS, manufactured by PROSOCO, Inc., Lawrence, KS, (800) 255-4255, www.prosoco.com.
   2. Subject to compliance with the following requirements:
      a. Recipient of Scientific Certification System (SCS) Indoor Air Quality Gold Certification.
      b. Comply with national, state and district AIM VOC regulations and contain 50 g/L or less.
      c. Abrasion Resistance: Greater than 50 percent improvement over untreated samples when tested in accordance with ASTM C1353.
      d. Achieve ‘High Traction Range’ readings when tested in accordance with ANSI B101.1.
      e. Coefficient of Friction: Greater than 0.60 dry, Greater than 0.60 wet when tested in accordance with ASTM C1028.
      f. Adhesion: Greater than 10 percent increase in pull-off strength when compared to an untreated sample when tested in accordance with ASTM D4541.
      g. Water Vapor Transmission: 100 percent retained when compared to untreated samples when tested in accordance with ASTM E96/96M Method B (Water Method).
      h. UV Stability: No degradation or yellowing of material when tested in accordance with ASTM G154.
E. Translucent Concrete Dye: General Purpose water-carried, penetrating, translucent colored dye.
   1. Product: Consolideck GemTone Stain manufactured by PROSOCO, Inc., Lawrence, KS, (800) 255-4255, www.prosoco.com.
   2. Subject to compliance with the following requirements:
      a. Recipient of Scientific Certification System (SCS) Indoor Air Quality Gold Certification.
      b. Comply with national, state and district AIM VOC regulations.
F. Interior Concrete Protective Treatments:
   1. General Purpose high-gloss film forming premium sealer, lithium silicate hardener/densifier.
      a. Product: Consolideck LSGuard, manufactured by PROSOCO, Inc., Lawrence, KS, (800) 255-4255, www.prosoco.com.
      b. Subject to compliance with the following requirements:
         i. Recipient of Scientific Certification System (SCS) Indoor Air Quality Gold Certification.
         ii. Comply with national, state and district AIM VOC regulations.
         iii. Achieve ‘High Traction Range’ readings when tested in accordance with ANSI B101.1 and ANSI B101.3.
         iv. Coefficient of Friction: Greater than 0.60 dry, Greater than 0.60 wet when tested in accordance with ASTM C1028.
         v. Adhesion: Greater than 10 percent increase in pull-off strength when compared to an untreated sample when tested in accordance with ASTM D4541.
         vi. Stain Resistance: Achieve limited or no adverse effects when tested in accordance with ASTM D1308.

vii. UV Stability: No degradation or yellowing of material when tested in accordance with ASTM G154.

2. General Purpose medium gloss, film forming sealer
   a. Product: Consolideck PolishGuard, manufactured by PROSOCO, Inc., Lawrence, KS, (800) 255-4255, www.prosoco.com.
   b. Subject to compliance with the following requirements:
      i. Living Building Challenge 2.0/2.1/3.0/3.1 Red List Compliant.
      ii. Recipient of Scientific Certification System (SCS) Indoor Air Quality Gold Certification.
      iii. Comply with national, state and district AIM VOC regulations.
      iv. Achieve 'High Traction Range' readings when tested in accordance with ANSI B101.1 and ANSI B101.3.
      v. Coefficient of Friction: Greater than 0.60 dry, greater than 0.60 wet when tested in accordance with ASTM C1028.
      vi. Stain Resistance: Achieve limited or no adverse effects when tested in accordance with ASTM D1308.
      vii. UV Stability: No degradation or yellowing of material when tested in accordance with ASTM G154.

2.03 EQUIPMENT

A. Conform to ACI 310.1 Part 2.2, except where more stringent requirements are specified below.
B. Auto Scrubber Machine: For cleaning operations.
C. Hand Grinder or stand-up edger for edge grinding/polishing.
D. Polishing Equipment:
   1. Dry grinding/polishing machines shall include a dust extraction system, including HEPA filtration vacuum.
E. Diamond Segments:
   1. Use heads from the same manufacturers throughout the entirety of the project.
F. Diamond Heads Types:
   1. Metal Diamonds: 60, 80 or 150.
   2. Hybrid Style Diamonds: 50 or 100.
   3. Resin Bonded, Phenolic Diamonds: 100, 200, 400, 800, 1300 and 3000 (if necessary).
G. Burnishing Machine and Burnishing Pads to produce specified results.
   1. Burnishing Machine: High speed burnisher, generating pad speeds of 1,500 RPM or higher, as recommended by protective treatment manufacturer. Dust skirt must be installed at time of work.
   2. Burnishing Pads: as recommended by protective treatment manufacturer.
      a. White Burnishing Pad, non-abrasive,
      b. Consolideck Heat Pad manufactured by PROSOCO, Inc., Lawrence, KS, (800) 255-4255, www.prosoco.com.

PART 3 EXECUTION

3.01 EXAMINATION

A. Examine substrate with installer present for conditions affecting performance of finish. Correct conditions detrimental to timely and proper work. Notify the [Architect][Owner's Representative] in writing of conditions detrimental to the proper and timely completion of the work.
B. Do not begin installation until unsatisfactory conditions are resolved. Beginning work constitutes acceptance of site conditions and responsibility for defective installation caused by prior observable conditions.

3.02 PREPARATION

A. Clean dirt, dust, oil, grease and other contaminants that interfere with penetration or performance of specified product from surfaces. Use appropriate concrete cleaners approved by the concrete surface treatment manufacturer where necessary. Rinse thoroughly using pressure water spray to remove cleaner residues. Allow surfaces to dry completely before application of product.
B. Repair, patch and fill cracks, voids, defects and damaged areas in surface as approved by the Architect. Allow repair materials to cure completely before application of product.
C. Variations in substrate texture and color will affect final appearance and should be corrected prior to application of sealer/hardener system and the polishing steps.
D. Protect surrounding areas prior to application. If product is accidentally misapplied to adjacent surfaces, flush with water immediately before material dries.
E. Avoid contact in areas not to be treated. Avoid contact with metal, glass and painted surfaces.
F. Seal open joints in accordance with Section 07 90 00.
G. Apply specified sealants and caulking and allow complete curing before application of penetrating concrete hardener/densifier.
H. Do not proceed until unsatisfactory conditions have been corrected.

3.03 CONCRETE POLISHING

A. Adhere to industry standard and conform to ACI 310.1 for grinding, honing, and polishing procedures for dry and wet grinding and honing, except where more stringent requirements are specified below.
B. Scrub and rinse slab surface with clean water and vacuum with auto-scrubber between and after final polishing passes.
C. Sequential progression of diamond polishing steps shall be required and limited to no more than double the grit value of the previous diamonds used.
D. Overlap adjacent polishing passes by 25 percent
E. Perform each pass perpendicular to the other pass north/south then east/west; multiple passes may be needed.
F. Progressively grind and polish the slab surface utilizing approved diamond segments as necessary to produce Finishing requirements.
    1. Apply liquid concrete repair material to fill gaps, voids and pop-outs during grinding operation per manufacturer's published recommendations.

    2. Apply cutting aid chemical during the initial wet grinding process per manufacturer's published recommendations. (Typically before the 200 grit resin or lower).

3.04 APPLICATION OF PENETRATING TRANSLUCENT DYE AND CONCRETE HARDENER/DENSIFIER

A. Dilute translucent dye with fresh water, or other approved solvent as recommended by manufacturer to create desired color. (Apply within 24 hours of dilution).
B. Lightly wet a clean microfiber pad with diluted translucent concrete dye, leaving the pad damp.
C. Apply prepared diluted translucent dye to the clean, dry concrete with a low pressure sprayer with a conical spray pattern per manufacturer's recommendations. (Typically after 200 -grit).
D. Using pre-wet microfiber pad, immediately spread the spray-applied diluted translucent dye to ensure uniform wetting and color distribution.
E. Allow treated surface to dry for one hour minimum prior to walking on or auto scrubbing.
F. Remove excess stain residue by cleaning slab with auto scrubber or dry burnisher and allow treated surface to dry.
G. Dry polish floor with 400 grit resin diamonds.
H. Clean slab with auto scrubber and allow surface to dry.
I. Apply second coat of penetrating diluted translucent dye, if desired. (Repeating above steps A through E) Allow treated surface to dry for one hour minimum prior to auto scrubbing or burnishing (As an alternative, both coats of dye may be applied at 400 grit, waiting one hour after each coat prior to auto-scrubbing or burnishing).

J. Remove excess stain residue by cleaning slab with auto scrubber or dry burnisher and allow treated surface to dry.
K. Apply a single coat of hardener/densifier with a low pressure sprayer fitted with a 0.5 gpm spray tip
L. Apply sufficient material to wet the surface without producing puddles. Use a clean soft-bristle push broom or microfiber pad to spread the hardener/densifier evenly to achieve uniform wetting. Avoid spreading once drying begins. Scrubbing is not necessary.
M. Allow treated surface to dry.
N. Continue progressively dry polishing floor with required resin diamonds to produce desired final finish.

3.05 APPLICATION OF INTERIOR CONCRETE PROTECTIVE TREATMENT

A. Application of general purpose, high gloss protective treatment:
   1. Apply per manufacturer's published recommendations to clean, dry slab at the completion of mechanically polishing the slab surface.
   2. Lightly wet a clean microfiber pad with concrete protective treatment and wring out excess, leaving the pad damp.
   3. Working from one control joint to another, apply a light, fine spray of concrete protective treatment to a small section of the floor using a clean, pump-up sprayer fitted with a 0.5 gpm spray tip , at an estimated coverage rate of 2000 to 3000 square feet per gallon.
   4. Using the damp microfiber pad and firm downward pressure, immediately spread the protective treatment to produce a thin, even coating. Spread the product as far as possible while maintaining a wet edge. Properly applied, protective treatment dries quickly. Stop spreading once drying begins. Avoid overlapping.
   5. Allow to dry tack free, typically 20 to 60 minutes.
   6. Once dry, high- speed burnish slab surface fitted with burnishing pad to increase gloss and to help the treatment fuse and bond with the concrete for increased durability and longevity. Surface temperatures immediately behind the burnisher must achieve 90.5 degrees Fahrenheit. (Burnish between coats if multiple applications are desired.)
   7. Repeat above steps 1 through 6, as necessary for additional applications of protective treatment, to achieve desired final finish (Maximum 3 coats).
A. Application of general purpose, medium gloss protective treatment:
   1. Apply per manufacturer's published recommendations to clean, dry slab at the completion of mechanically polishing the slab surface.
   2. Lightly wet a clean microfiber pad with general purpose, medium gloss protective treatment and wring out excess, leaving the pad damp.
   3. Spray-apply protective treatment using a clean, pump-up sprayer fitted with a 0.5 gpm conical or fan spray tip at an estimated coverage rate of 400 to 800 square feet per gallon. Work from one control joint to another.
   4. Spread with the damp microfiber pad. Maintain a thin, even coating and wet edge. Stop spreading once drying begins. Do not overlap. Repeat steps 1 through 4. Two coats are recommended for maximum protection.
   5. To increase gloss, wait at least 60 minutes after the final coat is applied, and then use a high-speed burnisher fitted with a white polishing pad. Burnish at a fast walking pace.

3.06 SLAB PROTECTION

A. Comply with provisions of ACI 310.1 specification for slab protection, except where more stringent requirements are specified below.
B. Protect finished floors to prevent damage including staining, gouges and scratching by construction traffic and activities until possession.
C. Do not drag or drop equipment or material across the slab which will scratch or chip it.
D. Inspect tires for debris prior to use on slab. Remove embedded items which may cause damage to floor slab.
E. Clean up spills on slab immediately. Provide cleaning chemicals and absorptive materials.

F. Develop a concrete protection procedure which addresses the following procedures:
   1. Communication of protection plan to subcontractors and vendors.
   2. Procedures for cleaning up slab spills, including use of and availability of cleaning chemicals and absorptive materials at Site.
G. Provide a clean slab using concrete maintenance cleaner within an auto scrubber, equipped with soft nylon brushes, in accordance with manufacturer's recommendations.

3.07 FINISHING REQUIREMENTS

A. Appearance:
   1. Interior exposed finished slab areas must consist of the following:
      a. Slab surface must meet the desired sheen, as discussed in Pre-Installation meeting and be consistent with approved Mock-up.
      b. Slab surface must have a consistent look and exhibit a finish that has no evidence of streaking or burnish marks.
      c. White residue or hazy appearance is not acceptable.
      d. Exposure of aggregate ACI 310.1 Table 3.2.3.1, Aggregate Exposure Class C-Medium Aggregate.
   2. Interior exposed finished slab areas must consist of the following CPAA Gloss Level:
      a. Interior exposed finished slab areas must meet the ACI 310.1 Table 3.2.4.1- Appearance levels for distinctness of image (DOI) Level 3.

END OF SECTION03 35 43.13

DIVISION 04

SECTION 04 051 - MORTAR AND MASONRY GROUT

PART 1 GENERAL

1.01 SECTION INCLUDES

A. Mortar for CMU veneer.

B. Grout for CMU veneer.

1.02 RELATED REQUIREMENTS

A. Section 04 2613 – Brick Veneer – Mortar at Brick locations.

B. Section 04 2723 – Cavity Wall Unit Masonry: Installation of mortar.

C. Section 08 1113 - Hollow Metal Frames: steel door frames installed in masonry.

1.03 REFERENCE STANDARDS

A. ASTM C94/C94M - Standard Specification for Ready-Mixed Concrete; 2016a.

B. ASTM C270 - Standard Specification for Mortar for Unit Masonry; 2014a.

C. ASTM C387/C387M - Standard Specification for Packaged, Dry, Combined Materials for Concrete and High Strength Mortar; 2015.

D. ASTM C476 - Standard Specification for Grout for Masonry; 2016.

1.04 SUBMITTALS

A. See Section 01 3000 - Administrative Requirements, for submittal procedures.

B. Product Data: Include design mix and indicate whether the Proportion or Property specification of ASTM C270 is to be used. Also include required environmental conditions and admixture limitations.

C. Samples: Submit two samples of mortar, illustrating mortar color and color range.

1.05 DELIVERY, STORAGE, AND HANDLING

A. Maintain packaged materials clean, dry, and protected against dampness, freezing, and foreign matter.

1.06 FIELD CONDITIONS

A. Maintain materials and surrounding air temperature to minimum 40 degrees F (5 degrees C) prior to, during, and 48 hours after completion of masonry work.

B. Maintain materials and surrounding air temperature to maximum 90 degrees F (32 degrees C) prior to, during, and 48 hours after completion of masonry work.

PART 2 PRODUCTS

2.01 MORTAR AND GROUT APPLICATIONS

A. Use only factory premixed packaged dry materials for mortar and grout, with addition of water only at project site.

B. Mortar Color: Natural gray unless otherwise indicated.

C. Mortar Mix Designs: ASTM C270, Property Specification.
   1. Exterior Masonry Veneer: Type N.

D. Grout Mix Designs:
   1. Engineered Masonry: 3,000 psi (21 MPa) strength at 28 days; 8-10 inches (200-250 mm) slump; provide premixed type in accordance with ASTM C 94/C 94M.
      a. Fine grout for spaces with smallest horizontal dimension of 2 inches (50 mm) or less.
      b. Coarse grout for spaces with smallest horizontal dimension greater than 2 inches (50 mm).

2.02 MATERIALS

A. Packaged Dry Material for Mortar for Unit Masonry: Premixed Portland cement, hydrated lime, and sand; complying with ASTM C387/C387M and capable of producing mortar of the specified strength in accordance with ASTM C270 with the addition of water only.
   1. Color: Standard gray at CMU.
   2. Color:

B. Packaged Dry Material for Grout for Masonry: Premixed cementitious materials and dried aggregates; capable of producing grout of the specified strength in accordance with ASTM C476 with the addition of water only.
   1. Manufacturers:
      a. Amerimix, an Oldcastle brand; AMX 600: www.amerimix.com.

C. Water: Clean and potable.

2.03 MORTAR MIXING

A. Thoroughly mix mortar ingredients using mechanical batch mixer, in accordance with ASTM C270 and in quantities needed for immediate use.

B. Maintain sand uniformly damp immediately before the mixing process.

C. Do not use anti-freeze compounds to lower the freezing point of mortar.

D. If water is lost by evaporation, re-temper only within two hours of mixing.

2.04 GROUT MIXING

A. Mix grout in accordance with ASTM C94/C94M.

B. Thoroughly mix grout ingredients in quantities needed for immediate use in accordance with ASTM C476 for fine and coarse grout.

PART 3 EXECUTION

3.01 INSTALLATION

A. Install mortar and grout to requirements of section(s) in which masonry is specified.

B. Work grout into masonry cores and cavities to eliminate voids.

C. Do not install grout in lifts greater than 16 inches (400 mm) without consolidating grout by rodding.

D. Do not displace reinforcement while placing grout.

E. Remove excess mortar from grout spaces.

3.02 GROUTING

A. Perform all grouting by means of low-lift technique. Do not employ high-lift grouting.

B. Low-Lift Grouting:
   1. Limit height of pours to 12 inches (300 mm).
   2. Limit height of masonry to 16 inches (400 mm) above each pour.
   3. Pour grout only after vertical reinforcing is in place; place horizontal reinforcing as grout is poured. Prevent displacement of bars as grout is poured.

4. Place grout for each pour continuously and consolidate immediately; do not interrupt pours for more than 1-1/2 hours.

END OF SECTION 04 05 11

SECTION 04 26 13 - BRICK VENEER

PART 1 - GENERAL

1.1 SUMMARY

A. Section Includes:

1. Brick.
2. Mortar materials.
3. Ties and anchors.
4. Embedded flashing.
5. Accessories.
6. Mortar mixes.

B. Products Installed but not Furnished under This Section:

1. Cast-stone trim in masonry veneer.
2. Steel lintels in masonry veneer.
3. Steel shelf angles for supporting masonry veneer.

C. Related Requirements:

1. Section 051200 "Structural Steel Framing" for installing anchor sections of adjustable masonry anchors for connecting to structural steel frame.
2. Section 076200 "Sheet Metal Flashing and Trim" for sheet metal flashing and for furnishing manufactured reglets installed in masonry joints.

1.2 ACTION SUBMITTALS

A. Product Data: For each type of product.

B. Shop Drawings: For the following:

1. Masonry Units: Indicate sizes, profiles, coursing, and locations of special shapes.
2. Fabricated Flashing: Detail corner units, end-dam units, and other special applications.

C. Samples for Initial Selection:

1. Clay face brick**.**
2. Colored mortar.
3. Weep/cavity vents.

D. Samples for Verification: For each type and color of the following:

1. Clay face brick.
2. Colored mortar. Make Samples using same sand and mortar ingredients to be used on Project.
3. Weep/cavity vents.
4. Cavity drainage material.
5. Accessories embedded in masonry.

1.3 INFORMATIONAL SUBMITTALS

A. List of Materials Used in Constructing Mockups: List generic product names together with manufacturers, manufacturers' product names, model numbers, lot numbers, batch numbers, source of supply, and other information as required to identify materials used. Include mix proportions for mortar and grout and source of aggregates.

1. Submittal is for information only. Receipt of list does not constitute approval of deviations from the Contract Documents unless such deviations are specifically brought to the attention of Architect and approved in writing.

B. Material Certificates: For each type and size of the following:

1. Masonry units.

a. Include material test reports substantiating compliance with requirements.
b. For brick, include size-variation data verifying that actual range of sizes falls within specified tolerances.
c. For exposed brick, include test report for efflorescence in accordance with ASTM C67/C67M.
d. For surface-coated brick, include test report for durability of surface appearance after 50 cycles of freezing and thawing in accordance with ASTM C67/C67M.

2. Integral water repellant used in decorative CMUs.
3. Cementitious materials. Include name of manufacturer, brand name, and type.
4. Mortar admixtures.
5. Preblended, dry mortar mixes. Include description of type and proportions of ingredients.
6. Anchors, ties, and metal accessories.

C. Mix Designs: For each type of mortar. Include description of type and proportions of ingredients.

1. Include test reports for mortar mixes required to comply with property specification. Test in accordance with ASTM C109/C109M for compressive strength, ASTM C1506 for water retention, and ASTM C91/C91M for air content.

D. Cold-Weather and Hot-Weather Procedures: Detailed description of methods, materials, and equipment to be used to comply with requirements.

1.4 QUALITY ASSURANCE

A. Qualifications:

1. Installers: All masonry flashing installers must complete the International Masonry Institute Flashing Upgrade training course.
2. Testing Agency: Qualified in accordance with ASTM C1093 for testing indicated.

1.5 MOCKUPS

A. Sample Panels: Build sample panels to verify selections made under Sample submittals and to demonstrate aesthetic effects. Comply with requirements in Section 014000 "Quality Requirements" for mockups.

1. Build sample panels for typical exterior wall in sizes approximately 48 inches (1219 mm) long by 48 inches (1219 mm)] by full thickness.
2. Build sample panels facing south.
3. Clean one-half of exposed faces of panels with masonry cleaner indicated.
4. Protect approved sample panels from the elements with weather-resistant membrane.
5. Approval of sample panels is for color, texture, and blending of masonry units; relationship of mortar and sealant colors to masonry unit colors; tooling of joints; aesthetic qualities of workmanship; and other material and construction qualities specifically approved by Architect in writing.

    a. Approval of sample panels does not constitute approval of deviations from the Contract Documents contained in sample panels unless such deviations are specifically approved by Architect in writing.

1.6 DELIVERY, STORAGE, AND HANDLING

A. Store masonry units on elevated platforms in a dry location. If units are not stored in an enclosed location, cover tops and sides of stacks with waterproof sheeting, securely tied. If units become wet, do not install until they are dry.

B. Deliver preblended, dry mortar mix in moisture-resistant containers. Store preblended, dry mortar mix in delivery containers on elevated platforms in a dry location or in covered weatherproof dispensing silos.

C. Store masonry accessories, including metal items, to prevent corrosion and accumulation of dirt and oil.

1.7 FIELD CONDITIONS

A. Protection of Masonry: During construction, cover tops of veneer, projections, and sills with waterproof sheeting at end of each day's work. Cover partially completed masonry when construction is not in progress.

    1. Extend cover a minimum of 24 inches (610 mm) down face of veneer, and hold cover securely in place.

B. Stain Prevention: Prevent grout, mortar, and soil from staining the face of masonry. Immediately remove grout, mortar, and soil that come in contact with masonry.

    1. Protect base of walls from rain-splashed mud and from mortar splatter by spreading coverings on ground and over wall surface.
    2. Protect sills, ledges, and projections from mortar droppings.
    3. Protect surfaces of window and door frames, as well as similar products with painted and integral finishes, from mortar droppings.
    4. Turn scaffold boards near the wall on edge at the end of each day to prevent rain from splashing mortar and dirt onto completed masonry.

C. Cold-Weather Requirements: Do not use frozen materials or materials mixed or coated with ice or frost. Do not build on frozen substrates. Remove and replace unit masonry damaged by frost or by freezing conditions. Comply with cold-weather construction requirements contained in TMS 602.

1. Cold-Weather Cleaning: Use liquid cleaning methods only when air temperature is 40 deg F (4 deg C) and higher and will remain so until masonry has dried, but not less than seven days after completing cleaning.

D. Hot-Weather Requirements: Comply with hot-weather construction requirements contained in TMS 602.

PART 2 - PRODUCTS

2.1 UNIT MASONRY, GENERAL

A. Masonry Standard: Comply with TMS 602, except as modified by requirements in the Contract Documents.

B. Defective Units: Referenced masonry unit standards may allow a certain percentage of units to contain chips, cracks, or other defects exceeding limits stated. Do not use units where such defects will be exposed in the completed Work and will be within 20 ft. (6 m) vertically and horizontally of a walking surface.

2.2 BRICK

A. General: Provide shapes indicated and as follows, with exposed surfaces matching finish and color of exposed faces of adjacent units.

1. For ends of sills and caps and for similar applications that would otherwise expose unfinished brick surfaces, provide units without cores or frogs and with exposed surfaces finished.
2. Provide special shapes for applications where stretcher units cannot accommodate special conditions, including corners, movement joints, bond beams, sashes, and lintel and requiring brick of size, form, color, and texture on exposed surfaces that cannot be produced by sawing, where shapes produced by sawing would result in sawed surfaces being exposed to view.

B. Clay Face Brick:
1. Basis of Design: Watsontown Brick: Columbia Collection: Red Wirecut
2. Efflorescence: Provide brick that has been tested in accordance with ASTM C67/C67M and is rated "not effloresced."
3. Size (Actual Dimensions): **3-1/2 inches (89 mm)**] by [**2-1/4 inches (57 mm)**] by [**7-5/8 inches (194 mm)**].
4. Application: Use where brick is exposed unless otherwise indicated.

2.3 MORTAR MATERIALS

A. Portland Cement: ASTM C150/C150M, Type I or II, except Type III may be used for cold-weather construction. Provide natural color or white cement as required to produce mortar color indicated.

1. Alkali content will not be more than 0.1 percent when tested in accordance with ASTM C114.

B. Hydrated Lime: ASTM C207, Type S.

C. Portland Cement-Lime Mix: Packaged blend of portland cement and hydrated lime containing no other ingredients.

D. Masonry Cement: ASTM C91/C91M.

1. Manufacturers: Subject to compliance with requirements, provide products by one of the following:

a. Argos USA LLC.
b. Cemex S.A.B. de C.V.
c. Fairborn Cement Company.
d. Federal White Cement, Ltd.
e. Holcim (US) Inc.
f. Lafarge North America Inc.
g. Lehigh Hanson; HeidelbergCement Group.
h. Lehigh White Cement Company.
i. QUIKRETE.
j. SAKRETE of North America LLC.

E. Mortar Cement: ASTM C1329/C1329M.

1. Manufacturers: Subject to compliance with requirements, provide products by one of the following:

a. Lafarge North America Inc.

F. Mortar Pigments: Natural and synthetic iron oxides and chromium oxides, compounded for use in mortar mixes and complying with ASTM C979/C979M. Use only pigments with a record of satisfactory performance in masonry mortar.

1. Manufacturers: Subject to compliance with requirements, provide products by one of the following:

a. Davis Colors.
b. Euclid Chemical Company (The); an RPM company.
c. Lanxess Corporation.
d. Solomon Colors, Inc.

G. Colored Cement Products: Packaged blend made from portland cement and hydrated lime and mortar pigments, all complying with specified requirements, and containing no other ingredients.

1. Colored Portland Cement-Lime Mix:
2. Manufacturers: Subject to compliance with requirements, provide products by one of the following:

1) Argos USA LLC.
2) Holcim (US) Inc.
3) Lehigh Hanson; HeidelbergCement Group.

3. Colored Masonry Cement:

a. Manufacturers: Subject to compliance with requirements, provide products by one of the following:

1) Argos USA LLC.
2) Cemex S.A.B. de C.V.
3) Fairborn Cement Company.
4) Holcim (US) Inc.
5) Lafarge North America Inc.
6) Lehigh Hanson; HeidelbergCement Group.

4. Formulate blend as required to produce color indicated or, if not indicated, as selected from manufacturer's standard colors.
5. Pigments do not exceed 10 percent of portland cement by weight.
6. Pigments do not exceed 5 percent of **masonry cement or mortar cement** by weight.

H. Preblended Dry Mortar Mix: Packaged blend made from portland cement and hydrated lime, sand, mortar pigments, water repellents, and admixtures and complying with ASTM C1714/C1714M.

1. Preblended Dry Portland Cement Mortar Mix:
   a. Manufacturers: Subject to compliance with requirements, provide products by one of the following:
      1) SPEC MIX® Portland Lime & Sand masonry mortar
      2) Amerimix.
      3) QUIKRETE.
      4) SAKRETE of North America LLC.

2. Preblended Dry Masonry Cement Mortar Mix

   a. Manufacturers: Subject to compliance with requirements, provide products by one of the following:

      1) Amerimix.
      2) Spec Mix, LLC.

I. Aggregate for Mortar: ASTM C144.

1. For mortar that is exposed to view, use washed aggregate consisting of natural sand or crushed stone.
2. For joints less than 1/4 inch (6.4 mm) thick, use aggregate graded with 100 percent passing the No. 16 (1.18-mm) sieve.
3. White-Mortar Aggregates: Natural white sand or crushed white stone.
4. Colored-Mortar Aggregates: Natural sand or crushed stone of color necessary to produce required mortar color.

J. Cold-Weather Admixture: Nonchloride, noncorrosive, accelerating admixture complying with **ASTM C494/C494M, Type C**, and recommended by manufacturer for use in masonry mortar of composition indicated.

1. Manufacturers: Subject to compliance with requirements, provide products by one of the following:

   a. BASF Corporation; Construction Systems.
   b. Euclid Chemical Company (The); an RPM company.
   c. GCP Applied Technologies Inc. (formerly Grace Construction Products).

K. Water-Repellent Admixture: Liquid water-repellent mortar admixture intended for use with CMUs containing integral water repellent from same manufacturer.

1. Manufacturers: Subject to compliance with requirements, provide products by one of the following:

   a. ACM Chemistries.
   b. BASF Corporation - Admixture Systems.
   c. GCP Applied Technologies Inc. (formerly Grace Construction Products).

L. Water: Potable.

2.4 TIES AND ANCHORS

A. General: Ties and anchors extend at least 1-1/2 inches (38 mm) into veneer but with at least a 5/8-inch (16-mm) cover on outside face.

B. Materials: Provide ties and anchors specified in this article that are made from materials that comply with the following unless otherwise indicated:
   1. Hot-Dip Galvanized, Carbon-Steel Wire: ASTM A1064/A1064M, with ASTM A153/A153M, Class B-2 coating.
   2. Stainless Steel Wire: ASTM A580/A580M, [**Type 304**] .
   3. Steel Sheet, Galvanized after Fabrication: ASTM A1008/A1008M, Commercial Steel, with ASTM A153/A153M, Class B coating.
   4. Stainless Steel Sheet: ASTM A240/A240M or ASTM A666, [**Type 304**].

C. Adjustable Anchors for Connecting to Structural Steel Framing: Provide anchors that allow vertical or horizontal adjustment but resist tension and compression forces perpendicular to plane of wall.

   1. Anchor Section for Welding to Steel Frame: Crimped 1/4-inch- (6.4-mm-) diameter, **stainless steel** wire.
   2. Tie Section: Triangular-shaped wire tie made from [**0.187-inch- (4.76-mm-)**] [**0.25-inch- (6.4-mm-)**] diameter, **stainless steel** wire.

D. Adjustable Masonry-Veneer Anchors:

   1. General: Provide anchors that allow vertical adjustment but resist a 100 lbf (445 N) load in both tension and compression perpendicular to plane of wall without deforming or developing play in excess of 1/16 inch (1.6 mm).
   2. Fabricate sheet metal anchor sections and other sheet metal parts from [**0.0781-inch- (1.98-mm-) thick, stainless steel sheet**].
   3. Fabricate wire ties from [**0.187-inch- (4.76-mm-)**] [**0.25-inch- (6.4-mm-)**] diameter, **stainless steel** wire unless otherwise indicated.
   4. Contractor's Option: Unless otherwise indicated, provide any of the adjustable masonry-veneer anchors specified.
   5. Masonry-Veneer Anchors; Vertical Slotted L-Plate: Rib-stiffened, sheet metal anchor section with screw holes at top and bottom, projecting vertical leg with slotted hole for wire tie **and washer at face of insulation**.

      a. Manufacturers: Subject to compliance with requirements, provide products by one of the following:

         1) FERO Corporation.
         2) Hohmann & Barnard, Inc.

6. Masonry-Veneer Anchors; Double-Pintle Plate: Rib-stiffened, sheet metal anchor section with screw holes at top and bottom, projecting horizontal leg with slots for vertical legs of double pintle wire tie

   a. Manufacturers: Subject to compliance with requirements, provide products by one of the following:

      1) Heckmann Building Products, Inc.
      2) Hohmann & Barnard, Inc.
      3) Wire-Bond.

7. Masonry-Veneer Anchors; Slotted Plate: Sheet metal anchor section, with screw holes at top and bottom; and raised rib-stiffened strap, stamped into center to provide a slot between strap and base for wire tie. **Use self-adhering tape to seal penetration behind anchor plate.**

   a. Manufacturers: Subject to compliance with requirements, provide products by one of the following:

      1) Heckmann Building Products, Inc.
      2) Hohmann & Barnard, Inc.
      3) Quality Steel and Wire LLC.
      4) Wire-Bond.

8. Masonry-Veneer Anchors; Slotted Plate with Prongs: Sheet metal anchor section, with screw holes at top and bottom; top and bottom ends bent to form pronged legs of length to match thickness of insulation; and raised rib-stiffened strap, stamped into center to provide a slot between strap and base for wire tie. **Use self-adhering tape to seal penetration behind anchor plate.**

   a. Manufacturers: Subject to compliance with requirements, provide products by one of the following:

      1) Hohmann & Barnard, Inc.
      2) Wire-Bond.

9. Polymer-Coated, Steel Drill Screws for Steel Studs: ASTM C954 except manufactured with hex washer head and neoprene or EPDM washer, No. 10 (4.83 mm) diameter by length required to penetrate steel stud flange with not less than three exposed threads, and with organic polymer coating with salt-spray resistance to red rust of more than 800 hours in accordance with ASTM B117.
10. Stainless Steel Drill Screws for Steel Studs: ASTM C954 except manufactured with hex washer head and neoprene or EPDM washer, No. 10 (4.83 mm) diameter by length required to penetrate steel stud flange with not less than three exposed threads; either made from Type 410 stainless steel or made with a carbon-steel drill point and 300 Series stainless steel shank.

2.5 EMBEDDED FLASHING

A. Metal Flashing: Provide metal flashing complying with SMACNA's "Architectural Sheet Metal Manual" and as follows:

   1. Stainless Steel: ASTM A240/A240M or ASTM A666, [**Type 304**], 0.016 inch (0.40 mm) thick.

2. Fabricate continuous flashings in sections 96 inches (2438 mm) long minimum, but not exceeding 12 ft. (3.7 m). Provide splice plates at joints of formed, smooth metal flashing.

    1) Cheney Flashing Company.
    2) Hohmann & Barnard, Inc.
    3) Keystone Flashing Company, Inc.
3. Fabricate through-wall flashing with drip edge **unless otherwise** indicated. Fabricate by extending flashing 1/2 inch (13 mm) out from wall, with outer edge bent down 30 degrees **and hemmed**.
4. Fabricate through-wall flashing with sealant stop **unless otherwise** indicated. Fabricate by bending metal back on itself 3/4 inch (19 mm) at exterior face of wall and down into joint 1/4 inch (6.4 mm) to form a stop for retaining sealant backer rod.
5. Fabricate metal expansion-joint strips from **stainless steel** to shapes indicated.
6. Solder metal items at corners.

B. Drainage Plane Flashing: Fabricate from **stainless steel** and drainage membrane to shapes indicated**, including weep tabs, termination bar and drip edge**. Provide flashing materials as follows:

1. Manufacturers: Subject to compliance with requirements, provide products by one of the following:

    a. Mortar Net Solutions.
    b. STS Coatings, Inc.
    c. York Manufacturing, Inc.
2. Stainless Steel: ASTM A240/A240M or ASTM A666, [**Type 304**] [**Type 316**], 0.016 inch (0.40 mm) thick.
3. Fabricate continuous flashings in sections 60 inches (1524 mm) long, minimum.
4. Accessories: Provide preformed corners, end dams, other special shapes, and seaming materials produced by flashing manufacturer.

C. Solder and Sealants for Sheet Metal Flashings:

1. Solder for Stainless Steel: ASTM B32, [**Grade Sn60**] [**Grade Sn96**], with acid flux of type recommended by stainless steel sheet manufacturer.
2. Elastomeric Sealant: ASTM C920, chemically curing [**silicone**] sealant; of type, grade, class, and use classifications required to seal joints in sheet metal flashing and remain watertight.

D. Adhesives, Primers, and Seam Tapes for Flashings: Flashing manufacturer's standard products or products recommended by flashing manufacturer for bonding flashing sheets to each other and to substrates.

E. Termination Bars for Flexible Flashing: **Stainless steel** steel bars [**0.075 inch by 1 inch (1.9 mm by 25 mm)**].

2.6 ACCESSORIES

A. Compressible Filler: Premolded filler strips complying with ASTM D1056, Grade 2A1; compressible up to 35 percent; of width and thickness indicated; formulated from **neoprene**, **urethane, or PVC**.

B. Weep/Vent Products: Use the following unless otherwise indicated:

1. Cellular Plastic Weep/Vent: One-piece, flexible extrusion made from UV-resistant polypropylene copolymer, full height and width of head joint and depth 1/8 inch (3.2 mm) less than depth of outer wythe, in color selected from manufacturer's standard.

    a. Manufacturers: Subject to compliance with requirements, provide products by one of the following:

        1) Advanced Building Products Inc.
        2) Heckmann Building Products, Inc.
        3) Hohmann & Barnard, Inc.
        4) Wire-Bond.

C. Cavity Drainage Material: Free-draining mesh, made from polymer strands that will not degrade within the wall cavity.

1. Mortar Deflector: Strips, **1-1/2 inches (38 mm) thick** and [**10 inches (254 mm)** high, with **dovetail-shaped notches** that prevent clogging with mortar droppings.

    a. Manufacturers: Subject to compliance with requirements, provide products by one of the following:

        1) Advanced Building Products Inc.
        2) CavClear/Archovations, Inc.
        3) Heckmann Building Products, Inc.
        4) Hohmann & Barnard, Inc.
        5) Mortar Net Solutions.
        6) Wire-Bond.

2. Rainscreen Drainage Mat: Sheets or strips not less than **1-1/2 inches (38 mm)** thick and installed to full height of cavity, to prevent weep holes from clogging with mortar.

    a. Manufacturers: Subject to compliance with requirements, provide products by one of the following:

        1) Advanced Building Products Inc.
        2) CavClear/Archovations, Inc.
        3) Keene Building Products.
        4) Mortar Net Solutions.
        5) Wire-Bond.

D. Offset Angle Supports: Steel plate brackets anchored to structure, allowing continuous insulation behind shelf angle supporting veneer. Component and anchor size and spacing engineered by manufacturer.

1. Manufacturers: Subject to compliance with requirements, provide products by one of the following:

    a. FERO Corporation.
    b. Halfen USA, Inc.
    c. Hohmann & Barnard, Inc.

E. Proprietary Acidic Masonry Cleaner: Manufacturer's standard-strength cleaner designed for removing mortar/grout stains, efflorescence, and other new construction stains from new masonry without discoloring or damaging masonry surfaces. Use product expressly approved for intended use by cleaner manufacturer and manufacturer of masonry units being cleaned.

1. Manufacturers: Subject to compliance with requirements, provide products by one of the following:

    a. Diedrich Technologies, Inc.; a Hohmann & Barnard company.
    b. EaCo Chem, Inc.
    c. PROSOCO, Inc.

2.7 MORTAR MIXES

A. General: Do not use admixtures, including pigments, air-entraining agents, accelerators, retarders, water-repellent agents, antifreeze compounds, or other admixtures unless otherwise indicated.

1. Do not use calcium chloride in mortar or grout.
2. Use **portland cement-lime** mortar unless otherwise indicated.

B. Preblended, Dry Mortar Mix: Furnish dry mortar ingredients in form of a preblended mix. Measure quantities by weight to ensure accurate proportions, and thoroughly blend ingredients before delivering to Project site.

1. For masonry below grade or in contact with earth, use **Type S**.

PART 3 - EXECUTION

3.1 EXAMINATION

A. Examine conditions, with Installer present, for compliance with requirements for installation tolerances and other conditions affecting performance of the Work.

1. For the record, prepare written report, endorsed by Installer, listing conditions detrimental to performance of the Work.

B. Proceed with installation only after unsatisfactory conditions have been corrected.

3.2 INSTALLATION, GENERAL

A. Leave openings for equipment to be installed before completing masonry. After installing equipment, complete masonry to match the construction immediately adjacent to opening.

B. Use full-size units without cutting if possible. If cutting is required to provide a continuous pattern or to fit adjoining construction, cut units with motor-driven saws; provide clean, sharp, unchipped edges. Allow units to dry before laying unless wetting of units is specified. Install cut units with cut surfaces and, where possible, cut edges concealed.

C. Select and arrange units for exposed unit masonry to produce a uniform blend of colors and textures. Mix units from several pallets or cubes as they are placed.

D. Matching Existing Masonry: Match coursing, bonding, color, and texture of existing masonry.

E. Wetting of Brick: Wet brick before laying if initial rate of absorption exceeds 30 g/30 sq. in. (30 g/194 sq. cm) per minute when tested in accordance with ASTM C67/C67M. Allow units to absorb water so they are damp but not wet at time of laying.

3.3 TOLERANCES

A. Dimensions and Locations of Elements:

1. For dimensions in cross section or elevation, do not vary by more than plus 1/2 inch (13 mm) or minus 1/4 inch (6.4 mm).
2. For location of elements in plan, do not vary from that indicated by more than plus or minus 1/2 inch (13 mm).
3. For location of elements in elevation, do not vary from that indicated by more than plus or minus 1/4 inch (6.4 mm) in a story height or 1/2 inch (13 mm) total.

B. Lines and Levels:

1. For bed joints and top surfaces of bearing walls, do not vary from level by more than 1/4 inch in 10 ft. (6.4 mm in 3 m), or 1/2-inch (13-mm) maximum.
2. For conspicuous horizontal lines, such as lintels, sills, parapets, and reveals, do not vary from level by more than 1/8 inch in 10 ft. (3.2 mm in 3 m), 1/4 inch in 20 ft. (6.4 mm in 6 m), or 1/2-inch (13-mm) maximum.
3. For vertical lines and surfaces, do not vary from plumb by more than 1/4 inch in 10 ft. (6.4 mm in 3 m), 3/8 inch in 20 ft. (10 mm in 6 m), or 1/2-inch (13-mm) maximum.
4. For conspicuous vertical lines, such as external corners, door jambs, reveals, and expansion and control joints, do not vary from plumb by more than 1/8 inch in 10 ft. (3.2 mm in 3 m), 1/4 inch in 20 ft. (6.4 mm in 6 m), or 1/2-inch (13-mm) maximum.
5. For lines and surfaces, do not vary from straight by more than 1/4 inch in 10 ft. (6.4 mm in 3 m), 3/8 inch in 20 ft. (10 mm in 6 m), or 1/2-inch (13-mm) maximum.
6. For vertical alignment of exposed head joints, do not vary from plumb by more than 1/4 inch in 10 ft. (6.4 mm in 3 m), or 1/2-inch (13-mm) maximum.

C. Joints:

1. For bed joints, do not vary from thickness indicated by more than plus or minus 1/8 inch (3.2 mm), with a maximum thickness limited to 1/2 inch (13 mm).
2. For exposed bed joints, do not vary from bed-joint thickness of adjacent courses by more than 1/8 inch (3.2 mm).
3. For head and collar joints, do not vary from thickness indicated by more than plus 3/8 inch (10 mm) or minus 1/4 inch (6.4 mm).
4. For exposed head joints, do not vary from thickness indicated by more than plus or minus 1/8 inch (3.2 mm).[**Do not vary from adjacent bed-joint and head-joint thicknesses by more than 1/8 inch (3.2 mm).**]
5. For exposed bed joints and head joints of stacked bond, do not vary from a straight line by more than 1/16 inch (1.6 mm) from one masonry unit to the next.

3.4 LAYING MASONRY WALLS

A. Lay out walls in advance for accurate spacing of surface bond patterns with uniform joint thicknesses and for accurate location of openings, movement-type joints, returns, and offsets. Avoid using less-than-half-size units, particularly at corners, jambs, and, where possible, at other locations.

B. Bond Pattern for Exposed Masonry: Unless otherwise indicated, lay exposed masonry in **running bond**; do not use units with less-than-nominal 4-inch (102-mm) horizontal face dimensions at corners or jambs.

C. Stopping and Resuming Work: Stop work by stepping back units in each course from those in course below; do not tooth. When resuming work, clean masonry surfaces that are to receive mortar, remove loose masonry units and mortar, and wet brick if required before laying fresh masonry.

D. Built-in Work: As construction progresses, build in items specified in this and other Sections. Fill in solidly with masonry around built-in items.

E. Fill space between steel frames and masonry solidly with mortar unless otherwise indicated.

3.5 MORTAR BEDDING AND JOINTING

A. Lay **solid** masonry units with completely filled bed and head joints; butter ends with sufficient mortar to fill head joints and shove into place. Do not deeply furrow bed joints or slush head joints.

B. Lay **hollow brick** with face shells fully bedded in mortar and with head joints of depth equal to bed joints. At starting course, fully bed entire units, including area under cells.

1. At anchors and ties, fully bed units and fill cells with mortar as needed to fully embed anchors and ties in mortar.

C. Set **cast-stone** trim units in full bed of mortar with full vertical joints.

1. Clean soiled surfaces with fiber brush and soap powder and rinse thoroughly with clear water.
2. Allow cleaned surfaces to dry before setting.
3. Wet joint surfaces thoroughly before applying mortar.
4. Rake out mortar joints for pointing with sealant.

D. Tool exposed joints slightly concave when thumbprint hard, using a jointer larger than joint thickness unless otherwise indicated.

1. For glazed masonry units, use a nonmetallic jointer 3/4 inch (19 mm) or more in width.

3.6 ANCHORED MASONRY VENEERS

A. Anchor masonry veneers to **wall framing** with masonry-veneer anchors to comply with the following requirements:

1. Fasten **screw-attached** anchors **through sheathing to wall framing** with metal fasteners of type indicated. Use two fasteners unless anchor design only uses one fastener.
2. Embed **tie sections** in masonry joints.
3. Locate anchor sections to allow maximum vertical differential movement of ties up and down.
4. Space anchors as indicated, but not more than 18 inches (457 mm) o.c. vertically and horizontally. Install additional anchors within 12 inches (305 mm) of openings and at intervals, not exceeding 24 inches (610 mm), around perimeter.

B. Provide not less than [**1 inch (25 mm)**] of airspace between back of masonry veneer and face of [**insulation**].

1. Keep airspace clean of mortar droppings and other materials during construction. Bevel beds away from airspace, to minimize mortar protrusions into airspace. Do not attempt to trowel or remove mortar fins protruding into airspace.

3.7 ANCHORING MASONRY TO STRUCTURAL STEEL AND CONCRETE

A. Anchor masonry to structural steel and concrete, where masonry abuts or faces structural steel or concrete to comply with the following:

1. Provide an open space not less than [**1/2 inch (13 mm)**] [**1 inch (25 mm)**] [**2 inches (51 mm)**] wide between masonry and structural steel or concrete unless otherwise indicated. Keep open space free of mortar and other rigid materials.
2. Anchor masonry with anchors embedded in masonry joints and attached to structure.
3. Space anchors as indicated, but not more than 24 inches (610 mm) o.c. vertically and 36 inches (914 mm) o.c. horizontally.

3.8 EXPANSION JOINTS

A. General: Install expansion-joint materials in unit masonry as masonry progresses. Do not allow materials to span expansion joints without provision to allow for in-plane wall or partition movement.

B. Form expansion joints as follows:

1. Build flanges of metal expansion strips into masonry. Lap each joint 4 inches (102 mm) in direction of water flow. Seal joints below grade and at junctures with horizontal expansion joints if any.
2. Build flanges of factory-fabricated, expansion-joint units into masonry.
3. Build in compressible joint fillers where indicated.
4. Form open joint full depth of brick wythe and of width indicated, but not less than [**3/8 inch (10 mm)**] [**1/2 inch (13 mm)**] for installation of sealant and backer rod specified in Section 079200 "Joint Sealants."

C. Provide horizontal, pressure-relieving joints by either leaving an airspace or inserting a compressible filler of width required for installing sealant and backer rod specified in Section 079200 "Joint Sealants," but not less than [**3/8 inch (10 mm)**].

1. Locate horizontal, pressure-relieving joints beneath shelf angles supporting masonry.

3.9 LINTELS

A. Install steel lintels where indicated.

B. Provide offset angle supports where indicate and where openings of more than 12 inches (305 mm) for brick-size units and 24 inches (610 mm) for block-size units are indicated without structural steel or other supporting lintels.

C. Provide minimum bearing of 8 inches (203 mm) at each jamb unless otherwise indicated.

3.10 FLASHING, WEEP HOLES, AND VENTS

A. General: Install embedded flashing and weep holes in masonry at shelf angles, lintels, ledges, other obstructions to downward flow of water in wall, and where indicated. **Install vents at shelf angles, ledges, and other obstructions to upward flow of air in cavities, and where indicated.**

B. Install flashing as follows unless otherwise indicated:
   1. Extend flashing through veneer, across airspace behind veneer, and up face of sheathing at least 8 inches (203 mm); with upper edge tucked under **air barrier**, lapping at least 4 inches (102 mm).**Fasten upper edge of flexible flashing to sheathing through termination bar.**
   2. At lintels and shelf angles, extend flashing 6 inches (152 mm) minimum at each end. At heads and sills, extend flashing 6 inches (152 mm) minimum and turn ends up not less than 2 inches (51 mm) to form end dams.
   3. Interlock end joints of sawtooth sheet metal flashing by overlapping ribs not less than 1-1/2 inches (38 mm) or as recommended by flashing manufacturer, and seal lap with elastomeric sealant complying with requirements in Section 079200 "Joint Sealants" for application indicated.
   4. Install metal **drip edges and sealant stops** with sawtooth sheet metal flashing by interlocking hemmed edges to form hooked seam. Seal seam with elastomeric sealant complying with requirements in Section 079200 "Joint Sealants" for application indicated.

C. Install reglets and nailers for flashing and other related construction where they are indicated to be built into masonry.

D. Install weep holes in veneers in head joints of first course of masonry immediately above embedded flashing.

   1. Use **specified weep/cavity vent products** to form weep holes.
   2. Use wicking material to form weep holes above flashing under brick sills. Turn wicking down at lip of sill to be as inconspicuous as possible.
   3. Space weep holes 24 inches (610 mm) o.c. unless otherwise indicated.
   4. Space weep holes formed from **plastic tubing** 16 inches (406 mm) o.c.
   5. Cover cavity side of weep holes with plastic insect screening at cavities insulated with loose-fill insulation.
   6. Trim wicking material flush with outside face of wall after mortar has set.

E. Place cavity drainage material in airspace behind veneers to comply with configuration requirements for cavity drainage material in "Accessories" Article.

F. Install vents in head joints in exterior wythes at spacing indicated. Use **specified weep/cavity vent products** to form vents.

   1. Close cavities off vertically and horizontally with blocking in manner indicated. Install through-wall flashing and weep holes above horizontal blocking.

3.11 FIELD QUALITY CONTROL

A. Testing Agency: **Engage** a qualified testing agency to perform tests and inspections. Allow inspectors access to scaffolding and work areas as needed to perform tests and inspections. Retesting of materials that fail to comply with specified requirements will be at Contractor's expense.

B. Clay Masonry Unit Test: For each type of unit provided, in accordance with ASTM C67/C67M for compressive strength.

C. Mortar Aggregate Ratio Test (Proportion Specification): For each mix provided, in accordance with ASTM C780.

3.12 REPAIRING, POINTING, AND CLEANING

A. Remove and replace masonry units that are loose, chipped, broken, stained, or otherwise damaged or that do not match adjoining units. Install new units to match adjoining units; install in fresh mortar, pointed to eliminate evidence of replacement.

B. Pointing: During the tooling of joints, enlarge voids and holes, except weep holes, and completely fill with mortar. Point up joints, including corners, openings, and adjacent construction, to provide a neat, uniform appearance. Prepare joints for sealant application, where indicated.

C. In-Progress Cleaning: Clean unit masonry as work progresses by dry brushing to remove mortar fins and smears before tooling joints.

D. Final Cleaning: After mortar is thoroughly set and cured, clean exposed masonry as follows:

1. Remove large mortar particles by hand with wooden paddles and nonmetallic scrape hoes or chisels.
2. Test cleaning methods on sample wall panel; leave one-half of panel uncleaned for comparison purposes. Obtain Architect's approval of sample cleaning before proceeding with cleaning of masonry.
3. Protect adjacent stone and non-masonry surfaces from contact with cleaner by covering them with liquid strippable masking agent or polyethylene film and waterproof masking tape.
4. Wet wall surfaces with water before applying cleaners; remove cleaners promptly by rinsing surfaces thoroughly with clear water.
5. Clean brick by bucket-and-brush hand-cleaning method described in BIA Technical Notes 20.
6. Clean masonry with a proprietary acidic cleaner applied according to manufacturer's written instructions.

3.13 MASONRY WASTE DISPOSAL

A. Salvageable Materials: Unless otherwise indicated, excess masonry materials are Contractor's property. At completion of unit masonry work, remove from Project site.

END OF SECTION 04 26 13

SECTION 04 27 23 - CAVITY WALL UNIT MASONRY

PART 1 GENERAL

1.01 SECTION INCLUDES

A. Concrete Block.

B. Reinforcement and Anchorage.

C. Flashings.

D. Lintels.

E. Accessories.

1.02 RELATED REQUIREMENTS

A. Section 04 0511 - Mortar and Masonry Grout.

B. Section 07 2100 - Thermal Insulation: Insulation for cavity spaces.

C. Section 07 9200 - Joint Sealants: Sealing control and expansion joints.

1.03 REFERENCE STANDARDS

A. ASTM A153/A153M - Standard Specification for Zinc Coating (Hot-Dip) on Iron and Steel Hardware; 2016a.

B. ASTM A240/A240M - Standard Specification for Chromium and Chromium-Nickel Stainless Steel Plate, Sheet, and Strip for Pressure Vessels and for General Applications; 2016.

C. ASTM A666 - Standard Specification for Annealed or Cold-Worked Austenitic Stainless Steel Sheet, Strip, Plate, and Flat Bar; 2015.

D. ASTM A1064/A1064M - Standard Specification for Carbon-Steel Wire and Welded Wire Reinforcement, Plain and Deformed, for Concrete; 2017.

1.04 SUBMITTALS

A. See Section 01 3300 - Administrative Requirements, for Submittal Procedures.

B. Product Data: Provide data for masonry units, fabricated wire reinforcement, and mortar.

C. Samples: Submit four samples of decorative block units to illustrate color, texture, and extremes of color range.

1.05 QUALITY ASSURANCE

A. Manufacturer Qualifications: Company specializing in manufacturing the products specified in this section with minimum Five years of documented experience.

B. Installer Qualifications: Company specializing in performing work of the type specified and with at least Five years of documented experience.

1.06 MOCK-UP

A. Construct a masonry cavity wall as a mock-up panel sized 8 feet (2.4 m) long by 6 feet (1.8 m) high; include mortar and accessories, reinforcement, flashings, and wall insulation in mock-up.

B. Locate where directed.

C. Mock-up may remain as part of the Work.

1.07 DELIVERY, STORAGE, AND HANDLING

A. Deliver, handle, and store masonry units by means that will prevent mechanical damage and contamination by other materials.

1.08 FIELD CONDITIONS

A. Maintain materials and surrounding air temperature to minimum 40 degrees F (5 degrees C) prior to, during, and 48 hours after completion of masonry work.

B. Maintain materials and surrounding air temperature to maximum 90 degrees F (32 degrees C) prior to, during, and 48 hours after completion of masonry work.

PART 2 PRODUCTS

2.01 CONCRETE MASONRY UNITS

A. Concrete Block: Comply with referenced standards and as follows:
   1. Size: Standard units with nominal face dimensions of 16 by 8 inches (400 by 200 mm) and nominal depth of 4 inches (100 mm).
   2. Face: Standard Split Face

B. Manufacturers:
   1. Westbrook Block Company: Ground face block.
      a. Color: GF-106
   2. Or Equal.
      a. Jandris & Sons: www.jandrisandsons.com.

2.02 MORTAR AND GROUT MATERIALS

A. Mortar and Grout: As specified in Section 04 0511.

2.03 REINFORCEMENT AND ANCHORAGE

A. Manufacturers:
   1. Blok-Lok Limited: www.blok-lok.com.
   2. Hohmann & Barnard, Inc: www.h-b.com/sle.
   3. WIRE-BOND: www.wirebond.com.

B. Joint Reinforcement: Use ladder type joint reinforcement where vertical reinforcement is involved and truss type elsewhere, unless otherwise indicated.

C. Multiple Wythe Joint Reinforcement: Ladder type; fabricated with moisture drip; ASTM A1064/A1064M steel wire, hot dip galvanized after fabrication to ASTM A153/A153M, Class B; 0.1483 inch (3.8 mm) side rods with 0.1483 inch (3.8 mm) cross rods; width as required to provide not more than 1 inch (25 mm) and not less than 1/2 inch (13 mm) of mortar coverage on each exposure.

D. Flexible Anchors: 2-piece anchors that permit differential movement between masonry and building frame, sized to provide not more than 1 inch (25 mm) and not less than 1/2 inch (13 mm) of mortar coverage from masonry face.
   1. Steel frame: Crimped wire anchors for welding to frame, 0.25 inch (6.3 mm) thick, with trapezoidal wire ties 0.1875 inch (4.75 mm) thick, hot dip galvanized to ASTM A 153/A 153M, Class B.

2.04 FLASHINGS

A. Stainless Steel/Polymer Fabric Flashing: ASTM A240/A240M stainless steel sheet bonded with rubber-based adhesive to one sheet of polymer fabric, and manufacturer's standard, self adhering, stainless steel lap tape.
   1. Manufacturers:
      a. York Manufacturing, Inc; Multi-Flash SS: www.yorkmfg.com.

B. Stainless Steel/Polymer Fabric Flashing: Self-adhered ASTM A240/A240M stainless steel sheet bonded with rubber-based adhesive to one sheet of polymer fabric, and manufacturer's standard, self adhering, stainless steel lap tape.

1. Manufacturers:
   a. York Manufacturing, Inc; York 304: www.yorkmfg.com.

C. Stainless Steel: ASTM A666, Type 304, soft temper; 26 gage, 0.0187 inch (0.48 mm) thick; finish 2B to 2D.

2.05 ACCESSORIES

A. Preformed Control Joints: Rubber material. Provide with corner and tee accessories, fused joints.
   1. Manufacturers:
      a. Blok-Lok Limited: www.blok-lok.com.
      b. Hohmann & Barnard, Inc: www.h-b.com/sle.
      c. WIRE-BOND: www.wirebond.com.

B. Weeps: Polyester mesh.
   1. Manufacturers:
      a. Blok-Lok Limited: www.blok-lok.com.
      b. CavClear/Archovations, Inc: www.cavclear.com.
      c. Mortar Net USA, Ltd: www.mortarnet.com.

C. Cavity Mortar Control: Semi-rigid polyethylene or polyester mesh panels, sized to thickness of wall cavity, and designed to prevent mortar droppings from clogging weeps and cavity vents and allow proper cavity drainage.
   1. Full-Height Airspace Maintenance and Drainage Material: Polymer mesh panels attached to rigid insulation of type indicated, for fitting between masonry ties to loosely fill masonry cavity.
      a. Manufacturers:
         1) CavClear/Archovations, Inc; CavClear Masonry Mat: www.cavclear.com.
         2) Substitutions: Not permitted.

D. Cleaning Solution: Non-acidic, not harmful to masonry work or adjacent materials.

PART 3 EXECUTION

3.01 EXAMINATION

A. Verify that field conditions are acceptable and are ready to receive masonry.

B. Verify that related items provided under other sections are properly sized and located.

C. Verify that built-in items are in proper location, and ready for roughing into masonry work.

3.02 PREPARATION

A. Direct and coordinate placement of metal anchors supplied for installation under other sections.

B. Provide temporary bracing during installation of masonry work. Maintain in place until building structure provides permanent bracing.

3.03 COURSING

A. Establish lines, levels, and coursing indicated. Protect from displacement.

B. Maintain masonry courses to uniform dimension. Form vertical and horizontal joints of uniform thickness.

C. Concrete Masonry Units:
   1. Bond: Running.
   2. Coursing: One unit and one mortar joint to equal 8 inches (200 mm).
   3. Mortar Joints: Concave.

3.04 PLACING AND BONDING

A. Lay solid masonry units in full bed of mortar, with full head joints, uniformly jointed with other work.

B. Buttering corners of joints or excessive furrowing of mortar joints is not permitted.

C. Remove excess mortar as work progresses.

D. Interlock intersections and external corners.

E. Do not shift or tap masonry units after mortar has achieved initial set. Where adjustment must be made, remove mortar and replace.

F. Perform job site cutting of masonry units with proper tools to provide straight, clean, unchipped edges. Prevent broken masonry unit corners or edges.

G. Isolate top joint of masonry partitions from horizontal structural framing members and slabs or decks with compressible joint filler.

3.05 WEEPS/CAVITY VENTS

A. Install weeps in cavity walls at 24 inches (600 mm) on center horizontally above through-wall flashing, above shelf angles and lintels, and at bottom of walls.

3.06 CAVITY WALL CONSTRUCTION

A. Do not permit mortar to drop or accumulate into cavity air space or to plug weep/cavity vents.

B. Install cavity mortar control panels continuously throughout full height of exterior masonry cavities during construction of exterior wythe, complying with manufacturer's installation instructions. Verify that airspace width is no more than 3/8 inch (9 mm) greater than panel thickness. Install horizontally between joint reinforcement. Stagger end joints in adjacent rows. Fit to perimeter construction and penetrations without voids.

C. Build inner wythe ahead of outer wythe to receive accessories.

3.07 REINFORCEMENT AND ANCHORAGES - CAVITY WALL MASONRY

A. Install horizontal joint reinforcement 16 inches (400 mm) on center.

B. Place masonry joint reinforcement in first and second horizontal joints above and below openings. Extend minimum 16 inches (400 mm) each side of openings.

C. Place continuous joint reinforcement in first and second joint below top of walls.

D. Lap joint reinforcement ends minimum 6 inches (150 mm).

E. Fasten anchors to structural framing and embed in masonry joints as masonry is laid. Space anchors at maximum of 24 inches (600 mm) horizontally and 16 inches (400 mm) vertically.

F. Reinforce stack bonded unit joint corners and intersections with strap anchors 16 inches (400 mm) on center.

3.08 MASONRY FLASHINGS

A. Whether or not specifically indicated, install masonry flashing to divert water to exterior at all locations where downward flow of water will be interrupted.

B. Extend metal flashings through exterior face of masonry and turn down to form drip.

C. Lap end joints of flashings at least 6 inches (152 mm), minimum, and seal watertight with flashing sealant/adhesive.

3.09 LINTELS

A. Install loose steel lintels over openings.

3.10 CONTROL AND EXPANSION JOINTS

A. Do not continue horizontal joint reinforcement through control or expansion joints.

B. Install preformed control joint device in continuous lengths. Seal butt and corner joints in accordance with manufacturer's instructions.

C. Size control joints as indicated on drawings; if not indicated, 3/4 inch (19 mm) wide and deep.

3.11 BUILT-IN WORK

A. As work progresses, install built-in metal door frames and other items to be built into the work and furnished under other sections.

B. Install built-in items plumb, level, and true to line.

C. Bed anchors of metal door and glazed frames in adjacent mortar joints. Fill frame voids solid with grout.

1. Fill adjacent masonry cores with grout minimum 12 inches (300 mm) from framed openings.

3.12 TOLERANCES

A. Maximum Variation from Alignment of Columns: 1/4 inch (6 mm).

B. Maximum Variation From Unit to Adjacent Unit: 1/16 inch (1.6 mm).

C. Maximum Variation from Plane of Wall: 1/4 inch in 10 ft (6 mm/3 m) and 1/2 inch in 20 ft (13 mm/6 m) or more.

D. Maximum Variation from Plumb: 1/4 inch (6 mm) per story non-cumulative; 1/2 inch (13 mm) in two stories or more.

E. Maximum Variation from Level Coursing: 1/8 inch in 3 ft (3 mm/m) and 1/4 inch in 10 ft (6 mm/3 m); 1/2 inch in 30 ft (13 mm/9 m).

F. Maximum Variation of Joint Thickness: 1/8 inch in 3 ft (3 mm/m).

G. Maximum Variation from Cross Sectional Thickness of Walls: 1/4 inch (6 mm).

3.13 CLEANING

A. Remove excess mortar and mortar smears as work progresses.

B. Replace defective mortar. Match adjacent work.

C. Clean soiled surfaces with cleaning solution.

D. Use non-metallic tools in cleaning operations.

3.14 PROTECTION

A. Without damaging completed work, provide protective boards at exposed external corners that are subject to damage by construction activities.

END OF SECTION 04 27 23

SECTION 04 72 00 – CAST STONE MASONRY

PART 1 GENERAL

1.01 SUMMARY

A. Section Includes:
   1. Trim units.
   2. Accessories

B. Related Requirements:
   1. Section 040511 "Mortar."
   2. Section 042613 “Masonry Veneer.”

1.02 ACTION SUBMITTALS

A. Product Data: For each type of product.
   1. For cast stone units, include construction details, material descriptions, dimensions of individual components and profiles, and finishes.

B. Shop Drawings: Show fabrication and installation details for cast stone units. Include dimensions, details of reinforcement and anchorages if any, and indication of finished faces.
   1. Include building elevations showing layout of units and locations of joints and anchors.

C. Samples for Initial Selection: For colored mortar.

D. Samples for Verification:
   1. For each color and texture of cast stone required, [4 inches (100 mm) square] in size.
   2. For each trim shape required, [4 inches (100 mm)] in length.

1.03 INFORMATIONAL SUBMITTALS

A. Qualification Data: For manufacturer and testing agency.

1.04 QUALITY ASSURANCE

A. Manufacturer Qualifications: A qualified manufacturer of cast stone units similar to those indicated for this Project, that has sufficient production capacity to manufacture required units, and is a plant certified by CSI.

1.05 DELIVERY, STORAGE, AND HANDLING

A. Coordinate delivery of cast stone with unit masonry work to avoid delaying the Work.

B. Pack, handle, and ship cast stone units in suitable packs or pallets.

1. Lift with wide-belt slings; do not use wire rope or ropes that might cause staining. Move cast stone units if required, using dollies with wood supports.

2. Store cast stone units on wood skids or pallets with nonstaining, waterproof covers, securely tied. Arrange to distribute weight evenly and to prevent damage to units. Ventilate under covers to prevent condensation.

C. Store cementitious materials on elevated platforms, under cover, and in a dry location. Do not use cementitious materials that have become damp.

D. Store mortar aggregates where grading and other required characteristics can be maintained and contamination can be avoided.

1.06 PROJECT CONDITIONS

A. Cold-Weather Requirements: Do not use frozen materials or materials mixed or coated with ice or frost. Do not build on frozen substrates. Comply with cold-weather construction requirements in TMS 602

1. Cold-Weather Cleaning: Use liquid cleaning methods only when air temperature is 40 deg F (4 deg C) and above and will remain so until cast stone has dried, but no fewer than seven days after completing cleaning.

B. Locate where directed. Hot-Weather Requirements: Comply with hot-weather construction requirements in TMS 602.

PART 2 PRODUCTS

2.01 MANUFACTURERS

A. C Source Limitations for Cast Stone: Obtain cast stone units from single source from single manufacturer.

2.02 CAST STONE MATERIALS

A. General: Comply with ASTM C1364.

B. Portland Cement: ASTM C150/C150M, Type I or Type III, containing not more than 0.60 percent total alkali when tested according to ASTM C114. Provide natural color or white cement as required to produce cast stone color indicated.

C. Fine Aggregates: Natural sand or crushed stone complying with ASTM C33/C33M, gradation and colors as needed to produce required cast stone textures and colors.

D. Admixtures: Use only admixtures specified or approved in writing by Architect.
1. Do not use admixtures that contain more than 0.1 percent water-soluble chloride ions by mass of cementitious materials. Do not use admixtures containing calcium chloride.

2. Use only admixtures that are certified by manufacturer to be compatible with cement and

other admixtures used.

3. Air-Entraining Admixture: ASTM C260/C260M. Add to mixes for units exposed to the exterior at manufacturer's prescribed rate to result in an air content of 4 to 6 percent, except do not add to zero-slump concrete mixes.

4. Water-Reducing Admixture: ASTM C494/C494M, Type A.

5. Water-Reducing, Retarding Admixture: ASTM C494/C494M, Type D.

6. Water-Reducing, Accelerating Admixture: ASTM C494/C494M, Type E.

E. Reinforcement:

1. Deformed steel bars complying with ASTM A615/A615M, Grade 40 (Grade 280). Use galvanized or epoxy-coated reinforcement when covered with less than 1-1/2 inches (38 mm) of cast stone material.

a. Epoxy Coating: ASTM A775/A775M.

b. Galvanized Coating: ASTM A767/A767M.

2. Plain-Steel, Welded-Wire Reinforcement: ASTM A1064/A1064M, plain, fabricated from as-drawn steel wire into flat sheets.

3. Galvanized-Steel, Welded-Wire Reinforcement: ASTM A1064/A1064M, plain, fabricated from galvanized-steel wire into flat sheets.

4. Fiber Reinforcement: ASTM C1116/C1116M.

F. Embedded Anchors and Other Inserts: Fabricated from stainless steel complying with ASTM A240/A240M, ASTM A276/A276M, or ASTM A666, Type 304.

2.03 CAST STONE UNITS

A. Acceptable Manufacturers:

1. Architectural Cast Stone

2. Approved Equal

B. Cast Stone Units: Comply with ASTM C1364.

1. Units are manufactured using the manufacturer's selected method.

2. Trim units including window sills, lintels, water tables, and items as indicated on Drawings.

C. Multiple Fabricate units with sharp arris and accurately reproduced details, with indicated texture on all exposed surfaces unless otherwise indicated.

1. Slope exposed horizontal surfaces 1:12 to drain unless otherwise indicated.

2. Provide raised fillets at backs of sills and at ends indicated to be built into jambs.

3. Provide drips on projecting elements unless otherwise indicated.

D. Fabrication Tolerances:

1. Variation in Cross Section: Do not vary from indicated dimensions by more than 1/8 inch (3 mm).

2. Variation in Length: Do not vary from indicated dimensions by more than 1/360 of the length of unit or 1/8 inch (3 mm), whichever is greater, but in no case by more than 1/4 inch (6 mm).

3. Warp, Bow, and Twist: Not to exceed 1/360 of the length of unit or 1/8 inch (3 mm), whichever is greater.

4. Location of Grooves, False Joints, Holes, Anchorages, and Similar Features: Do not vary from indicated position by more than 1/8 inch (3 mm) on formed surfaces of units and 3/8 inch (10 mm) on unformed surfaces.

E. Cure Units as Follows:

1. Cure units in enclosed, moist curing room at 95 percent relative humidity and temperature of 100 deg F (38 deg C) for 12 hours or 70 deg F (21 deg C) for 16 hours.

2. Keep units damp and continue curing to comply with one of the following:

a. No fewer than five days at mean daily temperature of 70 deg F (21 deg C) or above.

b. No fewer than seven days at mean daily temperature of 50 deg F (10 deg C) or above.

F. Acid etch units after curing to remove cement film from surfaces to be exposed to view.

G. Colors and Textures: As selected by Architect from manufacturer's full range.

2.04 ACCESSORIES

A. Anchors: Type and size indicated, fabricated from Type 304 stainless steel complying with ASTM A240/A240M, ASTM A276/A276M, or ASTM A666.

B. Dowels: 1/2-inch- (12-mm-) diameter round bars, fabricated from Type 304 stainless steel complying with ASTM A240/A240M, ASTM A276/A276M, or ASTM A666.

C. Stainless Proprietary Acidic Cleaner: Manufacturer's standard-strength cleaner designed for removing mortar/grout stains, efflorescence, and other new construction stains from new masonry without discoloring or damaging masonry surfaces. Use product expressly approved for intended use by cast stone manufacturer and expressly approved by cleaner.

2.05 MORTAR MIXES

A. Comply with requirements in Section 040511 for mortar mixes.

B. Do not use admixtures including pigments, air-entraining agents, accelerators, retarders, water-repellent agents, antifreeze compounds, or other admixtures unless otherwise indicated.

1. Do not use calcium chloride in mortar or grout.
2. Use portland cement-lime or mortar cement mortar unless otherwise indicated.

C. Preblended dry mortar mix complying with ASTM C1714/C1714M and capable of producing mortar strength as indicated in ASTM C270.

1. For setting mortar, use Type N.
2. For pointing mortar, use Type N.

D. Colored: To be selected from manufacturer's standard colors.

PART 3 EXECUTION

3.01 EXAMINATION

A. Examine substrates and conditions, with Installer present, for compliance with requirements for installation tolerances and other conditions affecting performance of the Work.

B. Proceed with installation only after unsatisfactory conditions have been corrected.

3.02 SETTING CAST STONE IN MORTAR

A. Direct Set cast stone as indicated in TMS 604.

B. Set cast stone as indicated on Drawings. Set units accurately in locations indicated, with edges and faces aligned according to established relationships and indicated tolerances.

1. Install anchors, supports, fasteners, and other attachments indicated or necessary to secure units in place.
2. Coordinate installation of cast stone with installation of flashing specified in other Sections.

C. Wet joint surfaces thoroughly before applying mortar or setting in mortar.

D. Set units in full bed of mortar with full head joints unless otherwise indicated.

1. Set units with joints [1/4 to 3/8 inch (6 to 10 mm)] wide unless otherwise indicated.
2. Build anchors and ties into mortar joints as units are set.
3. Fill dowel holes and anchor slots with mortar.

E. Rake out joints for pointing with mortar to depths of not less than 3/4 inch (19 mm). Rake joints to uniform depths with square bottoms and clean sides. Scrub faces of units to remove excess mortar as joints are raked.

F. Point mortar joints by placing and compacting mortar in layers not greater than 3/8 inch (10 mm). Compact each layer thoroughly and allow it to become thumbprint hard before applying next layer.

G. Provide sealant joints at head joints of copings and other horizontal surfaces; at expansion, control, and pressure-relieving joints; and at locations indicated.

1. Keep joints free of mortar and other rigid materials.
2. Build in compressible foam-plastic joint fillers where indicated.
3. Form joint of width indicated, but not less than 3/8 inch (10 mm).
4. Prime cast stone surfaces to receive sealant and install compressible backer rod in joints before applying sealant unless otherwise indicated.
5. Prepare and apply sealant of type and at locations indicated to comply with applicable requirements in Section 079200 "Joint Sealants."

3.03 INSTALLATION TOLERANCES

A. Variation from Plumb: Do not exceed 1/8 inch in 10 ft. (3 mm in 3 m), or 1/2 inch (12 mm) maximum.

B. Variation from Level: Do not exceed 1/8 inch in 10 ft. (3 mm in 3 m), or 1/2 inch (12 mm) maximum.

C. Variation in Joint Width: Do not vary joint thickness more than 1/8 inch in 36 inches (3 mm in 900 mm) or one-fourth of nominal joint width, whichever is less.

D. Variation in Plane between Adjacent Surfaces (Lipping): Do not vary from flush alignment with adjacent units or adjacent surfaces indicated to be flush with units by more than 1/16 inch (1.5 mm), except where variation is due to warpage of units within tolerances specified.

3.04 ADJUSTING AND CLEANING

A. Remove and replace stained and otherwise damaged units and units not matching approved Samples. Cast stone may be repaired if methods and results are approved by Architect.

B. Replace units in a manner that results in cast stone matching approved Samples, complying with other requirements, and showing no evidence of replacement.

C. In-Progress Cleaning: Clean cast stone as work progresses

1. Remove mortar fins and smears before tooling joints.
2. Remove excess sealant immediately, including spills, smears, and spatter.

D. Final Cleaning: After mortar is thoroughly set and cured, clean exposed cast stone as follows:

1. Remove large mortar particles by hand with wooden paddles and nonmetallic scrape hoes or chisels.

2. Test cleaning methods on sample; leave one sample uncleaned for comparison purposes. Obtain Architect's approval of sample cleaning before proceeding with cleaning of cast stone.

3. Protect adjacent surfaces from contact with cleaner by covering them with liquid strippable masking agent or polyethylene film and waterproof masking tape.

4. Wet surfaces with water before applying cleaners; remove cleaners promptly by rinsing thoroughly with clear water.

5. Clean cast stone by methods described in Cast Stone Institute Technical Bulletin #39.

END OF SECTION 04 72 00

DIVISION 05

SECTION 05 05 13 - SHOP-APPLIED FLUOROPOLYMER COATINGS FOR METAL

PART 1 GENERAL

1.1 SUMMARY

A. Section Includes:

1. Shop-applied, spray coating system, 70% [Kynar 500® FSF® resin-based], fluoropolymer coating system.
2. Shop-applied, coil coating system, 70% [Kynar 500® FSF® resin-based], fluoropolymer coating system, on aluminum.

B. Related Sections

1. Division 05 Section "Pipe and Tube Railings".
2. Division 05 Section "Decorative Metal".
3. Division 07 Section "Metal Wall Panels".
4. Division 07 Section "Sheet Metal Flashing and Trim".
5. Division 07 Section "Roof Specialties".
6. Division 08 Section "Aluminum-Framed Entrances and Storefronts".

1.2 DEFINITIONS

A. FSF® resin: Arkema Inc. trademark denoting a PVDF resin made without the use of a fluor-surfactant.

B. PVDF: Polyvinylidene Fluoride.

C. VOC: Volatile Organic Compounds.

1.3 REFERENCE STANDARDS

A. American Architectural Manufacturers Association (AAMA).

1. AAMA 2604 Voluntary Specification, Performance Requirements and Test Procedures for High Performing Organic Coatings on Aluminum Extrusions and Panels.
2. AAMA 2605 Voluntary Specification, Performance Requirements and Test Procedures for Superior Performing Organic Coatings on Aluminum Extrusions and Panels.
3. AAMA 621 Voluntary Specifications for High Performance Organic Coatings on Coil Coated Architectural Hot Dipped Galvanized (HDG) and Zinc-Aluminum.

B. ASTM International (ASTM)

1. ASTM B 117 – Practice for Operating Salt Spray (Fog) Apparatus.
2. ASTM B 244 – Standard Test Method for Measurement of Thickness of Anodic. Coatings on Aluminum and of Other Nonconductive Coatings on Nonmagnetic Basis Metals with Eddy-Current Instruments.
3. ASTM D 523 – Standard Test Method for Specular Gloss.
4. ASTM D 968 – Standard Test Methods for Abrasion Resistance of Organic Coatings by Falling Abrasive.

5. ASTM D 1308 – Standard Test Method for Effect of Household Chemicals on Clear and Pigmented Organic Finishes.
6. ASTM D 1400 – Standard Test Method for Nondestructive Measurement of Dry Film Thickness of Nonconductive Coatings Applied to a Nonferrous Metal Base.
7. ASTM D 1654 – Standard Test Method for Evaluation of Painted or Coated Specimens Subjected to Corrosive Environments.
8. ASTM D 2244 – Test Method for Calculation of Color Differences from Instrumentally Measured Color Coordinates.
9. ASTM D 2247 – Standard Practice for Testing Water Resistance of Coatings in 100% Relative Humidity.
10. ASTM D 2248 – Standard Practice for Detergent Resistance of Organic Finishes.
11. ASTM D 2794 – Standard Test Method for Resistance of Organic Coatings to the Effects of Rapid Deformation (Impact).
12. ASTM D 3359 – Standard Test Methods for Measuring Adhesion by Tape Test.
13. ASTM D 3363 – Standard Test Method for Film Hardness by Pencil Test.
14. ASTM D 4214 – Test Methods for Evaluating Degree of Chalking of Exterior Paint Films.
15. ASTM E 1980 – Practice for Calculating Solar Reflectance Index of Horizontal and Low-Sloped Opaque Surfaces.

1.4 SUBMITTALS

A. Section 01 33 00 - Submittal Procedures: Requirementsfor submittals.
B. Product Data: Submit data on all finishing products and coatings.
C. Samples for Initial Selection:
   1. Submit manufacturer's complete set of color samples for initial selection.
D. Samples for Verification:
   1. Submit two [6 by 6 inches] [(150 by 150 mm)] in size illustrating color, gloss, and texture for each color selected and each material to be coated.
E. Certificates: Certify formulations being provided are free of fluorosurfactants, and meet or exceed specified requirements of this section.
F. Test and Evaluation Reports: Submit reports indicating conformance with physical propertiesspecified and requirements of AAMA 2605.
G. Qualification Statements: Submit documentation indicating that coating manufacturer is alicensee of the resin manufacturer.

1.5 QUALIFICATIONS

A. Manufacturer: Company specializing in the manufacture of coatings specified in this sectionthat is a licensee of the resin manufacturer.
B. Applicator: Company specializing in the applications of coatings specified in this section in adherence to AAMA 2604 or AAMA2605 and is approved by the coating manufacturer.

1.6 WARRANTY

A. Section [01 70 00 - Execution and Closeout Requirements] <insert section number and title>:Requirements for warranties.
B. Coating Applicator’s Warranty: Applicator agrees to repair finish or replace coated items that demonstrate deterioration of [shop-applied, spray coating system] [shop-applied, coilcoating system] finished within warranty period indicated.

1. Exposed Coating: Deterioration includes but is not limited to:

    a. Color fading in excess of 5 Delta E Hunter units per ASTM D 2244.
    b. Peeling, checking, or cracking of coating adhesion to metal.
    c. Chalking in excess of a No. 8 when tested per Method D 4214.
    d. Corrosion of substrate in excess of a No. 6 on cut edges and a No. 9 on fieldsurfaces, when measured per ASTM D1654.

2. Warranty Period: 20 years from date of Substantial Completion.

PART 2 PRODUCTS

2.1 MANUFACTURES

A. Manufacturer, Resin Basis of Design: Subject to compliance with requirements, provide coating systemscontaining Kynar 500® FSF® PVDF resin by:

1. Arkema Inc.

2.2 Superior Performance Organic Coating on Aluminum Extrusions

A. Liquid Fluoropolymer Aluminum Extrusion Coatings, AAMA 2605: Minimum 70 percent Kynar 500® FSF® PVDF resin, by weight, in color coat and clear coat

1. Pencil Hardness, ASTM D3363: F minimum.
2. Dry Film Thickness, ASTM D1400: 0.20 mil primer coat plus 1.0 mil color coat, 1.20 mil total, minimum thickness.
3. Dry Film Thickness, ASTM D1400: 0.20 mil primer coat plus [1 mil barrier coat,] 1.0 mil color coat and 0.4 mil clear topcoat, [1.6 mil] [2.6 mil] total, minimum thickness.

2.3 PRIMER MATERIALS

A. Manufacturer's standard for finish and substrate indicated.

2.4 SHOP FINISHING METHODS

A. Mechanically clean and chemically pretreat fabricated items in accordance with the coatingmanufacturer’s requirements and AAMA requirements for the finish indicated.

B. Apply primer and finish coats in accordance with the coating manufacturer’s requirements forthe finish indicated.

2.5 SOURCE QUALITY CONTROL AND TESTS

A. Section [01 40 00 - Quality Requirements] <insert section number and title>: Testing, inspection and analysis requirements.

B. Test coatings in accordance with requirements of AAMA 2605 to verify compliance with the following:

Property	ASTM Test Method	Performance
Color Uniformity		Meets or Exceeds Specification
Specular Gloss	D 523	Medium Gloss
Dry Film Hardness	D 3363	Meets or Exceeds Specification
Dry Film Adhesion	D 3359	No Adhesion Loss
Wet Film Adhesion	D 3359	No Adhesion Loss
Boiling Water Adhesion	D 3359	No Adhesion Loss
Impact Resistance	D 2794	No Cracking or Adhesion Loss
Abrasion Resistance	D 968	Meets or Exceeds Specification
Muriatic Acid Resistance	D 1308	No Effect
Mortar Resistance		No Effect
Nitric Acid Resistance		Meets or Exceeds Specification
Detergent Resistance	D 2248	No Effect
Humidity Resistance	D 2247 B 117	Meets or Exceeds Specification
Salt Spray Resistance	D 1654	Meets or Exceeds Specification
South Florida Weathering Exposure		Meets or Exceeds Specification
Color Retention	D 2244	Meets or Exceeds Specification
Chalk Resistance	D 4214	Meets or Exceeds Specification
Gloss Retention	D 523	Meets or Exceeds Specification
Erosion Resistance	B 244	Meets or Exceeds Specification

C. Make completed pieces available for inspection at manufacturer's factory prior to packaging for shipment. Notify Owner at least seven daysbefore inspection is allowed.

D. Allow witnessing of factory inspections and test at manufacturer's test facility. Notify Owner at least seven days before inspections and tests are scheduled.

PART 3 EXECUTION [Not Used]

*****END OF SECTION*****

SECTION 05 12 00 - STRUCTURAL STEEL

PART 1 GENERAL

1.01 RELATED WORK SPECIFIED IN OTHER SECTIONS

A. Concrete Work: Section 033000.

B. Metal Deck: Section 053000.

1.02 SUMMARY

A. Extent of Structural steel work is shown on drawings, including notes and details to show size and location of members and type of steel required. Extent of Structural Steel includes, but is not limited to, providing and installing beams, columns, base and cap plates, bearing plates, leveling plates, channels, angles, plates, bent plates, roof dunnage steel, and other items which are part of structural framing and bracing, or are secured to structural steel beams or columns, or are shown on the Structural Drawings. In addition, provide all items listed in Section 2 of the AISC Code of Standard Practice except loose lintels which are specified in Section 05500, Metal Fabrications.

B. Provide steel sections, anchors, headed studs, bolts, expansion bolts, and other items attached to structural steel for attachment of work of other trades.

C. Miscellaneous Metal Fabrications are specified elsewhere in Division 5.

D. Refer to Division 3 for anchor bolt installation in concrete.

E. Refer to Division 4 for anchor bolt installation in masonry.

F. Source quality control: materials and fabrication procedures are subject to inspection and tests in mill, shop, and field. Such inspections and tests will not relieve Contractor of responsibility for providing materials and fabrication procedures in compliance with specified requirements.

G. Design of connections: connection design parameters and member end reactions are indicated on the drawings. The Fabricator shall be responsible for the design and adequacy of all connections. Promptly notify the Engineer of Record whenever connection design parameters are not clearly understood.

H. Existing conditions: Verify dimensions at site whenever possible without causing delay in the work.

1.03 SUBMITTALS

A. Refer to Section 013300.

B. Product data: submit producer's or manufacturer's specifications and, when appropriate, installation/application instructions for the following products:

1. Shrinkage-resistant grout.

C. Certification of Conformance: state that products conform to construction document requirements for the following products:

1. Structural steel (each type).
2. High strength bolts including bolts and washers.

D. Shop drawings: Submit shop drawings including complete details for fabrication and assembly of structural steel. Include all erection plans, member details, and anchor bolt setting plans. Column details shall include column flange and/or web reinforcement sized by the Contractor in accordance with AISC requirements.

1. No changes shall be made on any approved shop drawings without the written authorization of the Engineer of Record.

2. The omission from the shop drawings of any material shown on the contract drawings shall not relieve the Contractor from furnishing same, even though the drawings have been returned reviewed.

3. Substitutions of shapes or sections, or modifications of details as well as any deviations from the Structural Design Drawings, and the reasons therefore, shall be submitted with shop drawings for approval and shall be specifically called to the attention of the Engineer of Record.

4. Resubmitted shop drawings shall have revisions circled or clouded to identify the change. Piece mark designations which may be added to erection drawings on successive submissions need not be identified.

5. The Contractor alone shall be responsible for all errors of detailing, fabrication, and for the correct fitting of the structural members.

6. The Contractor shall be responsible for the correct coordination of his work where it comes in conjunction and/or contact with any other work. Dimensions are the responsibility of the Contractor. Indicate provisions to be made for connection of other work such as stair stringers and supports for equipment and apparatus. Indicate information relative to holes, cut-outs, and fittings as required by the work of other trades.

7. Fabrication of any material or performance of any work shall not proceed until shop drawings have been reviewed by the Engineer of Record.

8. The details shall be prepared in such a way as to avoid having steel connections, bracing, etc., interfere with architectural details or in any way reduce the area of shafts, openings, clearances, etc.

9. All weld symbols, both shop and field shall be those shown in the latest edition of "Symbols for Welding and Nondestructive Testing", AWS A2.4.

E. Connection Design Calculation Package: The fabricator shall submit a calculation package all of the connections detailed. The calculation package shall be stamped by an engineer registered in the state of jurisdiction.

F. Welder Certification: Provide certification that welders to be employed in work have satisfactorily passed AWS qualification tests.

1.04 QUALITY ASSURANCE

A. Refer to Quality Control in this Section.

B. Codes and standards: Comply with provisions of following, except as otherwise indicated:

1. AISC "Code of Standard Practice for Steel Buildings and Bridges", dated June 10, 1992.

a. "Where the fabricator must select or complete connection details, this approval constitutes acceptance by the owner's authorized representative of design responsibility for the structural adequacy of such connections."

2. AISC "Specifications for Structural Steel Buildings, Allowable Stress Design and Plastic Design, June 1, 1989 with commentary".

3. AISC "Specifications for Structural Joints using ASTM A 325 or A 490 Bolts" approved by the Research Council on Riveted and Bolted Structural Joints of the Engineering Foundation, November 13, 1985.

4. American Welding Society (AWS) D1.1 "Structural Welding Code - Steel".

5. ASTM A 6 "General Requirements for Delivery of Rolled Steel Plates, Shapes, Sheet Piling and Bars for Structural Use".

C. Qualifications for Welding Work: Qualify welding processes and welding operators in accordance with AWS "Standard Qualification Procedure".

1.05 DELIVERY, STORAGE AND HANDLING

A. Deliver materials to site at such intervals to insure uninterrupted progress of work.

B. Deliver anchor bolts and anchorage devices, which are to be embedded in cast-in-place concrete or masonry, in ample time to not delay work. Provide setting drawings, templates, and directions for the installation of the anchor bolts and other devices.

C. Store materials to permit easy access for inspection and identification. Structural steel members which are stored at the project site shall be above ground on platforms, skids or other supports. Other materials shall be stored in a weather tight and dry place until ready for use in the work. Protect steel members and packaged materials from corrosion and deterioration.

D. Do not store materials on structure in a manner that might cause distortion or damage to members or supporting structures. Repair or replace damaged materials or structures as directed.

PART 2 - PRODUCTS

2.01 MATERIALS

A. Metal Surfaces General: For fabrication of work which will be exposed to view, use only materials which are smooth and free of surface blemishes including pitting, rust and scale, seam marks, roller marks, rolled trade names and roughness. Remove such blemishes by grinding, or by welding and grinding, prior to cleaning, treating and application of surface finishes.

B. Structural steel shapes, plates, and bars: ASTM A36 excluding W shapes which shall be A992, Grade 50 (fy = or >50 ksi).

C. Steel Pipe: ASTM A53, Type S, Grade B, open hearth or basic oxygen steel, with the stipulation that sulfur does not exceed 0.05 percent.

D. Cold-formed steel tubing: ASTM A 500, Grade B (Fy=46 ksi).

E. Anchor bolts: ASTM A 36, nonheaded type, unless otherwise indicated.

F. Headed Studs: Stud type conforming to ASTM A 108, Grade 1015 or 1020, of size indicated on drawings and of design suitable for arc welding to steel members with automatically timed stud welding equipment. Dimensions and tolerances in accordance with figure 4.22.1 of the AWS "Structural Welding Code - Steel".

1. An arc shield (ferrule) of heat resistant ceramic or other suitable material shall be furnished with each headed stud.

2. A suitable deoxidizing and arc stabilizing flux for welding shall be furnished with each headed stud.

G. High-strength Threaded Fasteners: American made, heavy hexagon structural bolts, heavy hexagon nuts, and hardened washers, as follows:

1. Quenched and tempered medium-carbon steel bolts, nuts and washers, complying with ASTM A 325/A 490.

H. Expansion bolts/anchors: Conforming to Federal Specification FF-S-325, Group II, Type 4, Class 1 for concrete expansion anchors.

I. Electrodes for welding: AISC Specification, Structural Steel for Buildings, Section 1.4.5, Series E70XX or E80XX.

J. Channel Slots: 16 gage mill galvanized. Channel slots for masonry anchors for beams parallel and adjacent to masonry walls shall be DUR-O-WAL, D/A 901. Channel slots for beams shall be shop attached and have a maximum spacing of 16" on center. Channel slots for columns shall be DUR-O-WAL, D/A 901 and shall be shop attached with a maximum spacing of 16" on center.

K. Hot-Dipped Galvanizing: in accordance with ASTM A 123.

L. Zinc rich coating: a liquid compound containing 95% zinc in the dried film equivalent to Z.R.C. Cold Galvanizing Compound

M. Non-Shrink Grout: ASTM C 1107 Grade B or C, factory pre-mixed grout.

1. Products: Provide one of the following:

"Set Grout"; Master Builders.
"Euco-NS"; Euclid Chemical Co.
"Sure-Grip Grout"; Dayton Superior Corp.
"Five Star Grout"; U.S. Grout Corp.

2.02 FABRICATION

A. Shop Fabrication and Assembly: Fabricate and assemble structural assemblies in shop to greatest extent possible. Fabricate items of structural steel in accordance with AISC Specifications and as indicated on final shop drawings. Provide camber in structural members where indicated.

B. Properly mark and match-mark materials for field assembly.

C. All beams, unless otherwise shown, shall be fabricated with the natural camber up.

D. Where finishing is required, complete assembly, including welding of units, before start of finishing operations. Provide finish surfaces of members exposed in final structure free of markings, burrs, and other defects.

E. High-strength bolted construction: install high-strength threaded fasteners in accordance with AISC "Specifications for Structural Joints using ASTM A 325 or A 490 Bolts". High-strength fasteners indicated as bearing connectors on the drawings shall be tightened to a "snug tight" condition in accordance with ASTM A325 or A490, Section 8(c).

F. Welded construction: comply with AWS Code for procedures, appearance and quality of welds, and methods used in correcting welding work.

G. Assemble and weld built-up sections by methods which will produce true alignment of axes without warp.

H. Holes for Other Work: Provide holes required for securing other work to structural steel framing, and for passage of other work through steel framing members, as shown on final shop drawings. Shop cut, drill, or punch holes perpendicular to metal surfaces. Do not flame cut holes or enlarge holes by burning. Drill holes in bearing plates.

2.03 SHOP PRIMING

A. General: The majority of the structural steel framing is to receive spray-on fireproofing and shop-primed steel is not required in any conditions.

2.04 GALVANIZING

A. General: Steel members exposed to weather in the completed construction shall be hot-dipped galvanized in accordance with ASTM A 123. Minimum acceptable zinc coating weight shall be 2 oz./sq. ft.

PART 3 - EXECUTION

3.01 ERECTION

A. Surveys: Check elevations of concrete, masonry bearing surfaces, cold formed metal framing surfaces, and locations of anchor bolts and similar devices, before erection work proceeds, and report discrepancies to the Engineer of Record. Do not proceed with erection until corrections have been made, or until compensating adjustments to structural steel work have been agreed upon with the Engineer of Record.

B. Temporary Shoring and Bracing: Provide temporary shoring and bracing members with connections of sufficient strength to bear dead, snow, wind and erection loads. Maintain

temporary shoring and bracing members and connections, until permanent members are in place and final connections are made and until all masonry walls have been erected and attached to steel framing. Provide temporary guy lines to achieve proper alignment of structures as erection proceeds.

C. Temporary Planking: Provide temporary planking and working platforms as necessary to effectively complete work.

D. Setting Bases and Bearing Plates: Clean concrete and masonry bearing surfaces of bond-reducing materials and roughen to improve bond to surfaces. Clean bottom surface of base and bearing plates.

E. Grouting: Pack grout solidly between bearing surfaces and bases or plates to ensure that no voids remain. Finish exposed surfaces, protect installed materials, and allow to cure.

1. For proprietary grout materials, comply with manufacturer's instructions.

F. Field assembly: set structural frames accurately to lines and elevations indicated. Align and adjust various members forming part of complete frame or structure before permanently fastening. Clean bearing surfaces and other surfaces which will be in permanent contact before assembly. Perform necessary adjustments to compensate for discrepancies in elevations and alignment.

G. Level and plumb individual members of structure within specified AISC tolerances.

H. All beams shall be erected with the natural camber up.

I. The Contractor shall be solely responsible for obtaining from the Heating, Ventilating and Air Conditioning; Electrical; Plumbing; and other Sub-Contractors the final approved sizes and location and framing requirements for openings and special supports to be provided for their trades.

J. Provide heavy washers above base plates at all anchor bolts and as otherwise required.

K. The Contractor shall be solely responsible that all welded connections, including moment connections, are completed and made in full compliance with all recommendations and requirements of the AWS Building Code.

L. The Contractor shall be solely responsible that all bolted connections are complete. Connections with high strength bolts shall be completed in full compliance with all requirements of the Specification for Structural Joints.

M. High strength threaded fasteners shall be used in all connections requiring bolting.

N. Splice members only where indicated and accepted on shop drawings.

O. Do not enlarge unfair holes in members by burning or by use of drift pins, except in secondary bracing members. Ream holes that must be enlarged to admit bolts.

P. Gas cutting: do not use gas cutting torches in field for correcting fabrication errors in primary structural framing. Cutting will be permitted only on secondary members which are not under stress, as acceptable to the Engineer of Record. Finish gas-cut sections equal to a sheared appearance when permitted.

Q. Touch-up galvanizing with Z.R.C. coating: immediately after erection, clean field welds, bolted connections, and abraded areas of galvanizing. Apply coating to areas in strict accordance with manufacturer's directions.

1. Apply by brush or spray to provide minimum dry film thickness of 1.5 mils.

3.02 QUALITY CONTROL

A. Owner will engage an independent testing and inspection agency to inspect high-strength bolted connections and welded connections and to perform tests and prepare test reports. Facilitate Owner's Testing Laboratory's monitoring activities and furnish the Owner's Testing Laboratory, upon request, with:

1. Complete sets of approved shop drawings and corrective work procedures at fabricating shop (s).

2. Cutting lists, order lists, material bills, shipping lists and mill reports.

3. Information as to time and place of all rollings and shipments of materials to shops and field.

4. Representative sample pieces requested for testing.

5. Free and safe access and assistance for testing materials

B. Testing agency shall conduct and interpret tests and state in each report whether test specimens comply with requirements, and specifically state any deviations therefrom.

C. Provide access for testing agency to places where structural steel work is being fabricated or produced so that required inspection and testing can be accomplished.

D. Testing agency may inspect structural steel at plant before shipment; however, Owner reserves right, at any time before final acceptance, to reject material not complying with specified requirements.

E. Correct deficiencies in structural steel work which inspections and laboratory test reports have indicated to be not in compliance with requirements. Perform additional tests, at Contractor's expense, as may be necessary to reconfirm any non-compliance of original work, and as may be necessary to show compliance of corrected work.

3.03 SOURCE QUALITY CONTROL.

A Shop Inspection and Testing of Materials: Perform 100% visual inspection of shop fabrication, and conduct ultrasonic testing on not less than the following items in accordance with AWS D1.1, using the same type of equipment and welds to be used in the work.

1. Column flanges greater than 1-1/2" thickness in the zone of welded moment connections. Test an area extending a minimum of 6" above and below each beam flange and continuity plate.

2. Gusset plate connections at flanges or plates greater than 1-1/2" thickness. Test an area extending a minimum 6" in any direction from each weld.

3. Material at designated locations.

B. Visual Inspection of Shop Connection: Perform 100% visual inspection of bolted and welded connections in the Work. Examine the surfaces, size, quality and placement of each connection to verify installation in accordance with the Contract Documents and actioned shop drawings.

1. Measure weld length and profile of welds.

2. Monitor bolt installation and tightening procedures to verify compliance with RCSC requirements.

C. Testing of High-Strength Bolted Shop Connections: Test with calibrated torque wrench on at least 25%, but not less than two of the bolts in each shop connection.

D. Magnetic Particle Testing of Shop Welds: Test in accordance with ASTM 709 and include not less than the following items.

1. 10% of fillet welds, selected at random, final pass only, except as noted below.

2. 20% of continuity plate and bracing gusset plate fillet welds, selected at random, final pass only.

3. 100% of tension member fillet welds, e.g. hanger rod connections and other similar connections, root and final passes.

E. Ultrasonic Testing of Shop Welds: Test in accordance with AWS D1.1 and ASTM E164 and at not less than the following items.

1. 100% of full penetration welds.

F. Testing of Stud Welds: Perform 100% visual inspection of studs. Conduct standard in-place shear stud ben test on 10% of the studs, selected at random, and a minimum of one (1) stud per fabricated member, in accordance with AWS D1.1 requirements.

3.04 FIELD QUALITY CONTROL

A. Surveys: Survey the base structure before proceeding with erection, for dimensional extremes to determine the range of required compensating adjustments. Make an accurate survey of actual column plan location and elevation immediately upon the completion of every tier of steel and promptly submit report to the owner. Resurvey shall include tier below. Should column locations vary beyond the allowable tolerances, take necessary corrective measures and modify de tails and/or procedure as required. Survey the final erected structural steel frame prior to the application of any other work, reporting any discrepancies from the Contract requirements to the Owner.

B Qualification for Field Welding: Qualify the field welding operators and welding procedures in accordance with AWS D1.1 requirements, using the same type of equipment and welds to be used in the work.

C. Visual inspection of Steel Erection: Perform full time inspection of the filed erection for 100% of the structural elements.

D. Visual Inspection of Field Connections: Perform 100% visual inspection of bolted and welded connections in the Work. Examine the surfaces, size, quality and placement of each connection to verify installation in accordance with the Contract Documents and actioned shop drawings.

1. Measure weld length and profile of welds.
2. Monitor bolt installation and tightening procedures to verify compliance with RCSC requirements.

E. Testing of Slip Critical Bolted Field Connections: Test with calibrated torque wrench on at least 25%, but not less than two of the bolts in each shop connection.

F. Magnetic Particle Testing of Field Welds: Test in accordance with ASTM E709 and include not less than the following items.

1. 10% of fillet welds, selected at random, final pass only, except as noted below.

2. 20% of continuity plate and bracing gusset plate fillet welds, selected at random, final pass only.

3. 100% of tension member fillet welds, e.g. hanger rod connections and other similar connections, root and final passes.

G. Ultrasonic Testing of Field Welds: Test in accordance with AWS D1.1 and ASTM E164 and at not less than the following items.

1. 100% of full penetration welds.

H. Testing of Stud Welds: Perform 100% visual inspection of studs. Conduct standard in-place shear stud ben test on 10% of the studs, selected at random, and a minimum of one (1) stud per fabricated member, in accordance with AWS D1.1 requirements.

I. Testing of Non-Shrink Grout: Observe mixing and placement of grout to verify compliance with manufacturer's recommendations. Make grout samples at point of deposit, one set of three (3) two inch cubes for each batch produced. Laboratory cure the cubes, test one sample at 7 days, two samples at 28 days, in accordance with ASTM C109 methods.

END OF SECTION 05 12 00

SECTION 05 30 00 - METAL DECK

PART 1 - GENERAL

1.01 SUMMARY

A. Work Included: Metal deck required for this work is indicated on the drawings and includes, but is not limited to, the following:

1. All steel framed areas: steel roof, including all edge and end closures, deck support angles at columns, reinforcing as hereinafter specified, and all accessories as may be required for a complete and properly erected installation. Decking shall be furnished and installed so as to require no shoring from below.

2. Welding: include all welding required to properly fabricate and erect the steel decking.

3. Openings: steel decking shall be cut by the Contractor as required to fit predetermined holes and structural steel framed openings which are located and dimensioned on the Architectural, Structural, Mechanical, or Electrical Drawings.

   a. All holes required by other trades shall be provided by the trades requiring the holes (other than predetermined holes). Cutting shall be performed as hereinafter specified.

   b. The reinforcing required for all openings and holes and openings passing through the steel decking shall be furnished and installed under this Contract regardless of by whom the holes have been cut.

4. Mechanical Fasteners: as an alternative to welding, decking may be fastened with mechanical fasteners.

B. Related Sections:

1. Concrete Work: Section 033000.
2. Structural Steel: Section 051200.

C. Additional Requirements

1. Shop and field cutting of steel decking shall be included under the Contract.
2. Hoisting of all materials required to be furnished and installed shall be included under this Contract.
3. Painting: All touch-up painting required for weld areas and damaged surfaces of steel decking and accessory items shall be performed under this Contract.
4. Safety requirements: the Contractor is responsible for compliance with the safety requirements of all agencies having jurisdiction, including the Occupational Safety and Health Administration.

1.02 SUBMITTALS

A. General: Refer to Section 013300.

B. Product data: submit manufacturer's specifications and installation instructions for steel decking and accessories.

C. Shop drawings: submit detailed drawings showing layout and types of deck panels, anchorage details (welding, screws, power actuated fasteners, etc.), and conditions

requiring closure panels, supplementary framing, sump pans, cant strips, cut openings, special jointing or other accessories.

D. Resubmitted shop drawings shall have revisions circled or clouded to identify the change. Resubmitted shop drawings without revisions circled or clouded will be rejected and returned without review.

E. Welder Certification: provide certification that welders to be employed have satisfactorily passed AWS qualification tests.

1.03 QUALITY ASSURANCE

A. Refer to Quality Control in this Section.

B. Codes and standards: comply with provisions of the following codes and standards, except as otherwise indicated or specified:

1. AISI "Specification for the Design of Cold-Formed Steel Structural Members".
2. AWS D1.3 "Structural Welding Code - Sheet Steel".
3. SDI "Design Manual for Floor Decks and Roof Decks".

C. Qualification of field welding: qualify welding processes and welding operators in accordance with "Welder Qualification" procedures of AWS D1.1.

D. Design Criteria for Metal Roof Deck:

1. Manufacture in accordance with Steel Deck Institute Basic Design Specification, SDI Standard No. 1, supporting design live load plus dead load with a maximum fiber stress of 20,000 psi and a maximum live load deflection of 1/240 of the span.

1.04 PRODUCT DELIVERY AND STORAGE

A. Exercise care during storage and handling of metal deck units to avoid damage. Deck units stored at the job shall be supported completely free of the ground and covered to avoid damage from the elements. Other materials shall be stored in a weather tight and dry place until ready for use in the work. Protect deck and packaged materials from corrosion and deterioration.

PART 2 - PRODUCTS

2.01 MATERIALS

A. Products of the following manufacturers, provided they comply with the requirements of the contract documents, will be among those considered acceptable:

1. Vulcraft/Nucor Corporation
2. United Steel Deck, Inc.
3. Wheeling Corrugating Co., Inc.

B. See drawings for location, type and extent of metal deck. Furnish in sheet lengths sufficient to extend over a minimum of four supports (three spans).

1. Metal roof deck: 1 1/2” deep, Type "B", 20 gage galvanized steel deck with nesting side seams formed from hot dipped galvanized steel sheets, conforming to ASTM 446, Grade A, with zinc coating conforming to ASTM A525, coating designation G-90.

Minimum acceptable metal thickness, before coating, of 20 gage deck shall be .0358 inches.

C. Miscellaneous Steel Shapes: all shapes excluding W shapes shall be ASTM A36; W shapes shall be ASTM A992, Grade 50 (Fy=50 ksi).

D. Sheet metal accessories: ASTM A526, commercial quality, galvanized.

1. Metal cover plates: fabricate metal cover plates for end-abutting floor deck units of not less than same thickness as decking. Form to match contour of deck units and approximately 6" wide.

2. Closure strips: fabricate from 16 gage minimum commercial quality steel sheets tight fitting closures at open ends and sides of metal deck units. Use strap reinforcing as required to provide concrete form without additional support.

3. Roof sump pans: fabricate from single piece of 0.071" min. (14 gage) galvanized sheet steel with level bottoms and sloping sides to direct water flow to drain, unless otherwise shown. Provide sump pans of adequate size to receive roof drains and with bearing flanges not less than 3" wide. Recess pans not less than 1-1/2" below roof deck surface, unless otherwise shown or required by deck configuration. Holes for drains will be cut in the field.

E. Galvanizing repair paint: high zinc-dust content paint for repair of damaged galvanized surfaces complying with Military Specifications MIL-P-21035 (Ships).

F. Structural steel bar-sized channels: ASTM A36-81a or ASTM A306-64, Grade 80.

G. Arc welding electrodes: AWS A5.1 "Specification for Mild Steel Covered Arc-Welding Electrodes" Type E70XX.

H. Mechanical Fasteners:

1. Frame Fasteners: Corrosion-resistant, low-velocity, power-actuated or pneumatically driven carbon-steel fasteners; or self-drilling, self-threading screws:

a. Material: AISI 1070 modified
b. Hardness: minimum rockwell hardness C 54.5
c. Strength: minimum tensile strength 285ksi, minimum shear strength 175ksi
d. Design and Manufacture: knurled shank with forged ballistic point, fastener shall exhibit steel ductility and prevent hydrogen embrittlement.
e. Washers:
   1) For steel bar joist framing: min. 12mm steel washers
   2) For structural steel framing: min. 15mm steel washers
f. Corrosion Resistance:
   1) For steel roof decks with waterproofing membrane: 5 micron zinc electroplated in accordance with ASTM B633 SCI type III
   2) For exposed steel roof decks: min. AISI 304 stainless steel sealing caps with bonded neoprene washer shall be installed over each fastener
g. Approved types:
   1) For use with bar joist and light structural steel framing supports with top cord or flange thickness 1/8” to 3/8”
      a) Hilti X-ENDNK22 THQ12 (1/8” up to and including ¼”)
      b) Hilti X-EDN19 THQ12 (3/16” up to and including 3/8’
      c) Or approved equal
   2) For use with structural steel framing supports with top flange thickness ¼” or thicker.

a) Hilti X-ENP19 L15 (1/4" or thicker)
b) Or approved equal

2. Sidelap connectors: Corrosion-resistant, hexagonal washer head, self-drilling or self-piercing carbon steel screws
   a. Acceptable types of side-lap connectors:
      1) Drive mechanical side-lap connectors completely through adjacent lapped roof deck sheets to achieve positive engagement of adjacent sheets with a minimum of three thread penentration.
   b. Approved types:
      1) Hilti S-MD 10-16 x ¾" HWH #3 self drilling screw
      2) Hilti S-SLC01 M HWH side-lap self piercing screw
      3) Hilti S-SLC02 M HWH side-lap self drilling screw
      4) Or approved equal.

PART 3 - EXECUTION

3.01 INSPECTION OF WORK-IN-PLACE

A. Examine work-in-place on which specified work is in any way dependent to ensure that conditions are satisfactory for the installation of specified work. Report any defects which may influence satisfactory completion of specified work. Absence of such notification will be construed as acceptance of work-in-place.

3.02 INSTALLATION

A. General: install deck units and accessories in accordance with manufacturer's recommendations and final shop drawings, and as specified herein. Place deck units on supporting steel framework in sheet lengths sufficient to extend over four supports (3 spans) wherever possible and adjust to final position with ends accurately aligned and bearing on supporting members before being permanently fastened. Do not stretch or contract side lap interlocks. Place deck units flat and square, secured to adjacent framing without warp or excessive deflection. Coordinate and cooperate with structural steel erector in locating decking bundles to prevent overloading of structural members.

B. Cutting and Fitting: Cut and neatly fit deck units and accessories around other work projecting through or adjacent to the decking, as shown.

C. Roof Sump Pans: Place over openings provided in roof decking and weld to top decking surface. Space welds not more than 12" o.c. with at least one weld at each corner. Cut opening in roof sump bottom to accommodate drain size indicated.

D. Column Closure: At Metal Floor Deck, fabricate metal closures to fit tight to columns and close the voids. Weld in position to prevent leakage of concrete.

E. Touch-up Painting: After decking installation, wire brush, clean and paint scarred areas, welds and rust spots on top and bottom surfaces of decking units and supporting steel members. Touch-up galvanized surfaces with a galvanizing compound applied to a dry film thickness of at least 3 mils.

3.03 FASTENING

A. Metal Roof Deck, 1 12" deep Type "B", 20 gage:

   1. As indicated on the drawings

3.04 PROTECTION

A. Do not use metal deck units for storage or working platform until permanently secured in position.

B. Assure that construction loads do not exceed carrying capacity of deck, indicated on the approved shop drawings.

C. Weight or otherwise secure loose units at all times to prevent their displacement by high winds, etc. Place only as much decking as may be completely secured by the end of each day's work.

3.05 QUALITY CONTROL

A. Owner will engage an independent testing and inspection agency to inspect welded connections and to prepare test reports.

B. Testing agency shall conduct and interpret tests and state in each report whether test specimens comply with requirements, and specifically state any deviations therefrom.

C. Inspection of steel decking shall include verification that all steel decking is erected in accordance with approved drawings, Contract Documents, and applicable code requirements.

D. The Inspection Service will inspect all field welds in accordance with Articles 4.4, 4.5 and 7 of the American Welding Society "Structural Welding Code - Sheet Steel" (AWS D1.3-81). Welds will be certified and daily reports submitted.

E. The Inspection Service will make certain that qualified and valid welding procedure specifications are determined and followed. Procedures and qualification requirements will be as required by Article 7 of the American Welding Society "Structural Welding Code - Sheet Steel" (AWS D1.3-81).

END OF SECTION 05 30 00

SECTION 05 31 00 TORIS-4A METAL DECK

PART 1: GENERAL

1.1 SUMMARY

The requirements of this specification section include all materials, equipment and labor necessary to furnish and install a(n) TORIS4A-18 acoustical roof deck.

A. TORIS4A-18 acoustical panels shall serve as a(n) acoustical ceiling and a structural roof deck as indicated on the contract drawings.

B. TORIS4A-18 acoustical panels shall provide an exposed bottom surface that is substantially flat. The narrow rib openings of the Roof Deck panels shall provide the appearance of a linear ceiling. Fasteners for sidelaps and overlying roofing materials shall be concealed within the depth of the dovetail shaped ribs.

C. Toris Ankore hanging devices that are specially configured to fit into the dovetail-shaped ribs of the TORIS4A-18 acoustical panels shall be available. These hanging devices shall be utilized wherever any related work is suspended from the TORIS4A-18 acoustical panels. Toris Ankore hanging devices shall be furnished by the installer of the related work unless otherwise indicated.

1.2 RELATED WORK

The following related work is not part of this specification:

A. Structural Steel: Supplementary framing.
B. Roofing: Other than structural roof deck and accessories
C. Painting: Preparation for and application of field painting
D Mechanical: Attachments to TORIS4A-18 acoustical roof deck.
E. Electrical: Attachments to TORIS4A-18 acoustical roof deck

1.3. SUBMITTALS

Submit the following items with the conditions of the contract and appropriate specification sections:

A. The manufacturer's specifications, section properties, load and span tables, dimensions and finishes shall be submitted.

B. Noise Reduction Coefficients should also be submitted.

C. Shop drawings shall be submitted showing panel placement, profiles, material thicknesses, finishes, layout, anchorage and openings as dimensioned on the Architectural drawings.

D. A full width sample shall be submitted as requested to verify compliance with the

specifications and the level of quality. Color chips shall be submitted separately.

1.4 REFERENCE STANDARDS

A. Section properties shall be computed in accordance with the American Iron and Steel Institute (AISI) Specification for Design of Cold-Formed Steel Structural Members.

B. Welding shall comply with the applicable provisions of the American Welding Society (AWS) D1.3 Structural Welding Code-Sheet Steel.

C. Superimposed load and diaphragm shear capacities shall be computed in accordance with the requirements of the Steel Deck Institute (SDI).

D. The manufacturer shall have been regularly engaged in the production of roof deck and ceiling systems with all of the required features for a period of at least ten years.

E. The ANSI/SDI-RD - Standard for Steel Roof Deck shall govern the materials, design, and erection of cold formed steel deck used for roof applications in buildings and similar structures.

F. Noise reduction coefficients shall be verified by the result of sound absorption tests conducted in accordance with ASTM C423 and E795.

1.5 DELIVERY, STORAGE, AND HANDLING

A. The TORIS4A-18 acoustical roof deck shall be protected from damage during delivery, storage, and handling.

B. If storage at the jobsite is required, TORIS4A-18 acoustical roof deck shall be elevated above the ground, sloped to provide drainage, and protected from the weather with a ventilated covering.

1.6 SUBSTITUTION

A. Reference in the specification to any product, material, type or form of construction shall establish the minimum standard of quality and performance. These standards shall not be abridged or modified for any reason for the purpose of substitution.

B. The contractor shall submit any proposed substitution in writing to the Architect of Record for consideration no less than thirty calendar days prior to the original bid date. The substitution proposal package shall include, at the architect's option, a sample product, structural and performance data, and finish description.

C. This data will be coordinated and reviewed by the project design professionals. Acceptance of any submitted substitution will be so stated and defined by addendum prior to the original bid date. Substitution without addendum is not accepted.

1.7 COORDINATION

A. Coordinate the fastener length for attaching roofing and thermal insulation to avoid penetrating the finished bottom surface of the roof deck.

1.8 QUALITY ASSURANCE

A. The TORIS4A-18 acoustical Roof Deck shall have been tested and approved by Factory Mutual Research Corporation for use in Class 1 insulated steel deck roofconstruction.

B. The TORIS4A-18 acoustical Roof Deck shall be listed in the FM Approval Guide. All bundles shall bear the appropriate FM approved label.

PART 2: PRODUCTS

2.1 MANUFACTURER

A. In accordance with the requirements of this specification section, provide products manufactured by EPIC METALS CORPORATION, Rankin, PA.

B. The TORIS4A-18 acoustical type roof deck, design thickness, section properties, and NRC shall be shown on the structural design drawings.

2.2 MATERIAL

A. The TORIS4A-18 acoustical roof deck shall be cold-formed from steel coils conforming toASTM A653, structural quality, with a minimum yield strength of 40ksi.

B. Before forming, the steel coils shall have received a hot-dip protective coating of zinc conforming to ASTM A924, G90, as defined in ASTMA653.

C. The minimum uncoated thickness of the steel furnished shall not be less than 95% of the design thickness.

2.3 FABRICATION

A. TORIS4A-18 acoustical roof deck shall be cold-formed by the continuous roll forming process.

A. TORIS4A-18 acoustical roof deck shall have continuous dovetail shaped ribs spaced 8" on center with a profile depth of 4". Salient feature shall be triple complex radii roll-formed into panel at edge of ribs to create reveals and cells yielding chamfered appearance for strength / capacity. Panels with reveals having simple linear appearance, or involving one radius at edge of reveal, or brake-formed panels shall not be acceptable.

B. TORIS4A-18 acoustical roof deck panels shall have positive registering sidelaps that can be fastened by welds or screws.

C. TORIS4A-18 acoustical panels shall be fabricated with perforated holes. Perforated areas shall be located in the areas between the dovetail-shaped ribs. Acoustic elements shall be provided for installation above the perforated holes in the bottom flat area between the dovetail-shaped ribs. To facilitate field painting of the perforated surfaces, the sound absorbing elements shall be supported above the surface on corrosion resistant spacers. Sound absorbing elements and spacers shall be furnished under this specification section for installation by others. A minimum NRC value of 0.95 shall be provided. This value shall be established by sound absorption tests without the use of thermal insulation above the panels.

D. TORIS4A-18 acoustical roof deck Primer Paint Option—Prior to forming, galvanized steel shall be chemically cleaned and pre-treated followed by an oven-cured epoxy primer and a second coat of oven-cured polyester primer paint applied to both sides in the manufacturer's standard color of off-white. Compatibility of field applied finish paint with factory applied primer paint shall be the responsibility of the painting contractor.

2.4 ACCESSORIES

A. TORIS4A-18 acoustical roof deck Ankore hanging devices (which include Ankore locks) shall be installable and relocatable anywhere along the length of the interior ribs of the TORIS4A-18 acoustical roof deck panels.

B. TORIS4A-18 acoustical roof deck Wedge Bolt hanging devices (which include Wedge Locks) shall be installable and relocatable anywhere along the length of the interior ribs of the TORIS4A-18 acoustical roof deck panels.

C. The manufacturer's standard ridge plates, valley plates, transition plates, and closures shall be provided as indicated on the structural drawings.

D. Openings and reinforcement for openings noted specifically by the deck

manufacturer on the structural drawings shall be provided.

E. Type TORIS4A-18 acoustical roof deck requiring access openings shall be shown on the structural or architectural drawings. Openings shall be factory cut in the bottom plate area between ribs as required. Access covers shall be fabricated to match the finish and profile of the adjacent deck surface, including any stiffening ribs, perforations, and embossing patterns. Covers shall be screw attached. Holes in access covers shall be pre-punched. Screws shall be furnished by deck manufacturer.

F. Where panels continue from the interior of the building through to the exterior of the building (for example as a cantilever canopy): the panels will be perforated on the interior and not perforated on the exterior, air dams will be provided to block the movement of conditioned air from the interior of the building to the exterior. Air Dam assembly shall have an allowable air infiltration of less than .02 cfm per square foot at 1.57 lb per square foot.

G. TORIS4A-18 acoustical Roof Deck will be supplied with factory assembled EpicTjoints® to provide a thermal break between panels that span from the interior to the exterior of the building. The Epic T-joints shall have been tested inaccordance with ASTM C1363.

PART 3: EXECUTION

3.1 GENERAL

A. The TORIS4A-18 acoustical roof deck shall be installed in strict accordance with the manufacturer's instructions, approved erection drawings, and all applicable safety regulations.

3.2 BEFORE INSTALLATION

A. The supporting frame and other work relating to the TORIS4A-18 acoustical roof deck shall be examined to determine if this work has been properlycompleted.

B. Bundles of material shall be located on the supporting frame in such a manner that overloading of any individual framing members does not occur.

C. All components of the TORIS4A-18 acoustical roof deck shall be protected from significant damage during shipment and handling. If storage at the jobsite is required, bundles or packages of these materials shall be elevated above the ground, sloped to provide drainage, and protected from the elements with a ventilated, waterproof covering.

3.3 INSTALLATION

A. Before being permanently fastened, TORIS4A-18 acoustical roof deck shall be placed on the supporting frame and adjusted to final position with ends accurately aligned and adequately bearing on the supporting frame. Consistent coverage shall be maintained so that panels located in adjacent bays will be properly aligned.

B. Cutting of TORIS4A-18 acoustical roof deck to suit jobsite conditions shall be performed in a neat and professional manner. Only those openings indicated on the structural drawings shall be cut. Other openings shall be cut and reinforced by those requiring the openings as approved by the structural engineer.

C. The TORIS4A-18 acoustical roof deck shall be fastened to all supporting members with three 3/4" diameter puddle welds per 24" wide panel or as indicated on the manufacturer's erection drawings.

1. The sides of TORIS4A-18 acoustical roof deck located at the perimeter of the building shall be fastened to supporting members with 3/4" diameter puddle welds at a maximum spacing of 36" on center or less as indicated on the manufacturer's erection drawings.

D. The sidelaps of TORIS4A-18 acoustical roof deck shall be fastened together with 3/8” x 1” long seam weld or with No. 12 screws at a maximum spacing of 36" on center or less as indicated on the manufacturer's erection drawings.

E. Construction loads shall not be applied to TORIS4A-18 acoustical roof deck until after the panels are permanently fastened to supporting members, and sidelaps are attached. The construction loads shall not exceed the capacity of the panels.

F. Items such as ceilings, light fixtures, conduit, pipe and ductwork shall not be suspended from TORIS4A-18 acoustical roof deck without specific approval of the structural engineer.

G. Sump pans, ridge plates, valley plates, transition plates, eave plates, and supplied reinforcement for small openings shall be fastened as indicated on the manufacturer's erection drawings.

3.4 AFTER INSTALLATION

A. Construction loads that could damage the TORIS4A-18 acoustical roof deck such as heavy concentrated loads and impact loads shall be avoided. Planking shall be used in all high traffic areas.

B. Galvanizing and other coatings that are damaged must be field repaired using

appropriate methods and shall be the responsibility of the contractor.

C. Cleaning the bottom surface of the TORIS4A-18 acoustical roof deck for field painting shall be the responsibility of the contractor.

END OF SECTION 05 31 00

SECTION 05 40 00 - COLD-FORMED METAL FRAMING

PART 1 - GENERAL

1.01 RELATED DOCUMENTS

A. Drawings and general provisions of the Contract, including General and Supplementary Conditions and Division 01 specification sections, apply to this section.

1.02 SECTION INCLUDES

A. Exterior non-load-bearing framing.

B. Soffit Framing.

1.03 RELATED SECTIONS

A. Section 092900 – Gypsum Board Assemblies.

1.04 PERFORMANCE REQUIREMENTS

A. Structural Performance: Provide cold-formed metal framing capable of withstanding design loads within limits and under conditions indicated.
   1. Design Loads: As indicated on structural drawings.
   2. Deflection Limits: Design framing systems to withstand design loads without deflections greater than the following:
      a. Exterior Non-Load-Bearing Framing: Horizontal deflection of 1/8” but not less than what is required by insulated metal panel manufacture.
   3. Design framing systems to provide for movement of framing members without damage or overstressing, sheathing failure, connection failure, undue strain on fasteners and anchors, or other detrimental effects when subject to a maximum ambient temperature change of 120 degrees F.
   4. Design framing system to maintain clearances at openings, to allow for construction tolerance.
   5. Interior non load barring partition framing to allow for ¼” of building deflection upward and downward.

B. Cold-Formed Steel Framing, General: Design according to AISI's "Standard for Cold-Formed Steel Framing - General Provisions."
   1. Design exterior non-load-bearing wall framing to accommodate horizontal deflection without regard for contribution of sheathing materials.

1.05 SUBMITTALS

A. Submit under provisions of Section 013300.

B. Product Data: For each type of cold-formed metal framing product and accessory indicated.

C. Delegated-Design Submittal: for Cold-Formed steel framing.

D. Shop Drawings: Show layout, spacings, sizes, thicknesses, and types of cold-formed metal framing; fabrication; and fastening and anchorage details, including mechanical fasteners. Show reinforcing channels, opening framing, supplemental framing, strapping, bracing, bridging, splices, accessories, connection details, and attachment to adjoining work.
   1. For cold-formed metal framing indicated to comply with design loads, include structural analysis data signed and sealed by the qualified professional engineer registered in the jurisdiction in which the work is be performed.
   2. Submit approved signed shop drawings to the building department.

E. Welding certificates.

F. Qualification Data: For professional engineer.

G. Product Test Reports: From a qualified testing agency, unless otherwise stated, indicating that each of the following complies with requirements, based on evaluation of comprehensive tests for current products:
   1. Steel sheet.
   2. Expansion anchors.
   3. Power-actuated anchors.
   4. Mechanical fasteners.
   5. Vertical deflection clips.
   6. Horizontal drift deflection clips
   7. Miscellaneous structural clips and accessories.

H. Research/Evaluation Reports: For cold-formed metal framing.

1.06 QUALITY ASSURANCE

A. Engineering Responsibility: Preparation of shop drawings, design calculations, and other structural data by a qualified professional engineer.
   1. Professional Engineer Qualifications: A professional engineer who is legally qualified to practice in jurisdiction where project is located and who is experienced in providing engineering services of the kind indicated. Engineering services are defined as those performed for installations of cold-formed metal framing that are similar to those indicated for this project in material, design, and extent.

B. Product Tests: Mill certificates or data from a qualified independent testing agency indicating steel sheet complies with requirements, including base-metal thickness, yield strength, tensile strength, total elongation, chemical requirements, and metallic-coating thickness.

C. Welding: Qualify procedures and personnel according to AWS D1.1, "Structural Welding Code--Steel," and AWS D1.3, "Structural Welding Code--Sheet Steel."

D. AISI Specifications and Standards: Comply with AISI's "North American Specification for the Design of Cold-Formed Steel Structural Members" and its "Standard for Cold-Formed Steel Framing - General Provisions."
   1. Comply with AISI's "Standard for Cold-Formed Steel Framing - Header Design."

1.07 DELIVERY, STORAGE AND HANDLING

A. Protect cold-formed metal framing from corrosion, deformation, and other damage during delivery, storage, and handling.

B. Store cold-formed metal framing, protect with a waterproof covering, and ventilate to avoid condensation.

PART 2 - PRODUCTS

2.01 MANUFACTURERS

A. Available Manufacturers: Subject to compliance with requirements, manufacturers offering cold-formed metal framing that may be incorporated into the Work include, but are not limited to, the following:
1. Clark Steel Framing.
2. Dale/Incor.
3. Dietrich Metal Framing; a Worthington Industries Company.
4. MarinoWare; a division of Ware Industries.

2.02 MATERIALS

A. Steel Sheet: ASTM A 1003/A 1003M, Metallic coated, of grade and coating weight as follows::
1. Grade: As required by structural performance.
2. Coating:
a. G60 minimum.
b. G90 for stud backup applications.

B. Steel Sheet for Vertical Deflection Clips: ASTM A653, structural steel, zinc coated, of grade and coating as follows:
1. Grade: As required for structural performance.
2. Coating: G90.

2.03 EXTERIOR NON-LOAD-BEARING FRAMING

A. Steel Studs: Manufacturer's standard C-shaped steel studs, of web depths indicated, punched, with stiffened flanges, and as follows:
1. Minimum Base-Metal Thickness: 0.0428-inch.
2. Flange Width: 1-5/8 inches.
3. Section Properties: As required for structural performance..

B. Steel Track: Manufacturer's standard U-shaped steel track, of web depths indicated, unpunched, with unstiffened flanges, and as follows:
1. Minimum Base-Metal Thickness: Matching steel studs.
2. Flange Width: 1-1/4 inches.

C. Vertical Deflection Clips: Manufacturer's standard head clips, capable of accommodating upward and downward vertical displacement of primary structure through positive mechanical attachment to stud web.

1. Available Manufacturers: Subject to compliance with requirements, manufacturers offering products that may be incorporated into the Work include, but are not limited to, the following:
   a. Dietrich Metal Framing; a Worthington Industries Company.
   b. MarinoWare, a division of Ware Industries.
   c. SCAFCO Corporation
   d. The Steel Network, Inc.

D. Single Deflection Track: Manufacturer's single, deep-leg, U-shaped steel track; unpunched, with unstiffened flanges, of web depth to contain studs while allowing free vertical movement, with flanges designed to support horizontal and lateral loads and transfer them to the primary structure, and as follows:
   1. Available Manufacturers: Subject to compliance with requirements, manufacturers offering products that may be incorporated into the Work include, but are not limited to, the following:
      a. Dietrich Metal Framing; a Worthington Industries Company.
   2. Minimum Base-Metal Thickness: 0.0538-inch.
   3. Flange Width: 2-1/2 inches.

E. Double Deflection Tracks: Manufacturer's double, deep-leg, U-shaped steel tracks, consisting of nested inner and outer tracks; unpunched, with unstiffened flanges.
   1. Outer Track: Of web depth to allow free vertical movement of inner track, with flanges designed to support horizontal and lateral loads and transfer them to the primary structure, and as follows:
      a. Minimum Base-Metal Thickness: 0.0538-inch.
      b. Flange Width: 2-1/2 inches..
   2. Inner Track: Of web depth indicated, and as follows:
      a. Minimum Base-Metal Thickness: 0.0538-inch.
      b. Flange Width: 3-1/2 inches.]

2.04 FRAMING ACCESSORIES

A. Fabricate steel-framing accessories from steel sheet, ASTM A1003, Structural Grade, Type H, metallic coated, of same grade and coating weight used for framing members.

B. Provide accessories of manufacturer's standard thickness and configuration, unless otherwise indicated, as follows:
   1. Supplementary framing.
   2. Bracing, bridging, and solid blocking.
   3. Web stiffeners.
   4. Anchor clips.
   5. End clips.
   6. Foundation clips.
   7. Gusset plates.
   8. Stud kickers, knee braces, and girts.
   9. Joist hangers and end closures.
   10. Hole reinforcing plates.
   11. Backer plates.

2.05 ANCHORS, CLIPS, AND FASTENERS

A. Steel Shapes and Clips: ASTM A36, zinc coated by hot-dip process according to ASTM A123.

B. Anchor Bolts: ASTM F1554, Grade 36, threaded carbon-steel hex-headed bolts and carbon-steel nuts; and flat, hardened-steel washers; zinc coated by hot-dip process according to ASTM A153, Class C.

C. Expansion Anchors: Fabricated from corrosion-resistant materials, with capability to sustain, without failure, a load equal to five (5) times design load, as determined by testing per ASTM E488 conducted by a qualified independent testing agency.

D. Power-Actuated Anchors: Fastener system of type suitable for application indicated, fabricated from corrosion-resistant materials, with capability to sustain, without failure, a load equal to 10 times design load, as determined by testing per ASTM E1190 conducted by a qualified independent testing agency.

E. Mechanical Fasteners: ASTM C1513, corrosion-resistant-coated, self-drilling, self-tapping steel drill screws.
   1. Head Type: Low-profile head beneath sheathing, manufacturer's standard elsewhere.

F. Welding Electrodes: Comply with AWS standards.

2.06 MISCELLANEOUS MATERIALS

A. Galvanizing Repair Paint: SSPC-Paint 20 or DOD-P-21035.

B. Nonmetallic, Non-shrink Grout: Premixed, nonmetallic, non-corrosive, non-staining grout containing selected silica sands, portland cement, shrinkage-compensating agents, and plasticizing and water-reducing agents, complying with ASTM C 1107, with fluid consistency and 30-minute working time.

C. Shims: Load bearing, high-density multi-monomer plastic, non-leaching.

D. Sealer Gaskets: Closed-cell neoprene foam, 1/4-inch thick, selected from manufacturer's standard widths to match width of bottom track or rim track members.

2.07 FABRICATION

A. Fabricate cold-formed metal framing and accessories plumb, square, and true to line, and with connections securely fastened, according to referenced AISI's specifications and standards, manufacturer's written instructions, and requirements in this section.
   1. Fabricate framing assemblies using jigs or templates.
   2. Cut framing members by sawing or shearing; do not torch cut.
   3. Fasten cold-formed metal framing members by welding, screw fastening, clinch fastening, or riveting as standard with fabricator. Wire tying of framing members is not permitted.
      a. Comply with AWS D1.3 requirements and procedures for welding, appearance and quality of welds, and methods used in correcting welding work.
      b. Locate mechanical fasteners and install according to shop drawings, with screw penetrating joined members by not less than three (3) exposed screw threads.
   4. Fasten other materials to cold-formed metal framing by welding, bolting, or screw fastening, according to shop drawings.

B. Reinforce, stiffen, and brace framing assemblies to withstand handling, delivery, and erection stresses. Lift fabricated assemblies to prevent damage or permanent distortion.

C. Fabrication Tolerances: Fabricate assemblies level, plumb, and true to line to a maximum allowable tolerance variation of 1/8-inch in 10 feet and as follows:
   1. Spacing: Space individual framing members no more than plus or minus 1/8-inch from plan location. Cumulative error shall not exceed minimum fastening requirements of sheathing or other finishing materials.
   2. Squareness: Fabricate each cold-formed metal framing assembly to a maximum out-of-square tolerance of 1/8-inch.

PART 3 - EXECUTION

3.01 EXAMINATION

A. Examine supporting substrates and abutting structural framing for compliance with requirements for installation tolerances and other conditions affecting performance.
   1. Proceed with installation only after unsatisfactory conditions have been corrected.

3.02 PREPARATION

A. Before sprayed fire-resistive materials are applied, attach continuous angles, supplementary framing, or tracks to structural members indicated to receive sprayed fire-resistive materials.

B. After applying sprayed fire-resistive materials, remove only as much of these materials as needed to complete installation of cold-formed framing without reducing thickness of fire-resistive materials below that are required to obtain fire-resistance rating indicated. Protect remaining fire-resistive materials from damage.

C. Install sealer gaskets to isolate the underside of wall bottom track or rim track and the top of foundation wall or slab at stud or joist locations.

3.03 INSTALLATION, GENERAL

A. Cold-formed metal framing may be shop or field fabricated for installation, or it may be field assembled.

B. Install cold-formed metal framing according to AISI's "Standard for Cold-Formed Steel Framing - General Provisions" and to manufacturer's written instructions unless more stringent requirements are indicated.

C. Install shop- or field-fabricated, cold-formed framing and securely anchor to supporting structure.
   1. Screw, bolt, or weld wall panels at horizontal and vertical junctures to produce flush, even, true-to-line joints with maximum variation in plane and true position between fabricated panels not exceeding 1/16-inch.

D. Install cold-formed metal framing and accessories plumb, square, and true to line, and with connections securely fastened.
   1. Cut framing members by sawing or shearing; do not torch cut.
   2. Fasten cold-formed metal framing members by welding, screw fastening, clinch fastening, or riveting. Wire tying of framing members is not permitted.

a. Comply with AWS D1.3 requirements and procedures for welding, appearance and quality of welds, and methods used in correcting welding work.
b. Locate mechanical fasteners and install according to shop drawings, and complying with requirements for spacing, edge distances, and screw penetration.

E. Install framing members in one-piece lengths unless splice connections are indicated for track or tension members.

F. Install temporary bracing and supports to secure framing and support loads comparable in intensity to those for which structure was designed. Maintain braces and supports in place, undisturbed, until entire integrated supporting structure has been completed and permanent connections to framing are secured.

G. Do not bridge building expansion and control joints with cold-formed metal framing. Independently frame both sides of joints.

H. Install insulation, specified in Section 07 21 00, in built-up exterior framing members, such as headers, sills, boxed joists, and multiple studs at openings, that are inaccessible on completion of framing work.

I. Fasten hole reinforcing plate over web penetrations that exceed size of manufacturer's standard punched openings.

J. Erection Tolerances: Install cold-formed metal framing level, plumb, and true to line to a maximum allowable tolerance variation of 1/8-inch in 10 feet and as follows:
1. Space individual framing members no more than plus or minus 1/8-inch from plan location. Cumulative error shall not exceed minimum fastening requirements of sheathing or other finishing materials.

3.04 EXTERIOR NON-LOAD-BEARING WALL INSTALLATION

A. Install continuous tracks sized to match studs. Align tracks accurately and securely anchor to supporting structure as indicated.

B. Fasten both flanges of studs to top and bottom track, unless otherwise indicated. Space studs as follows:
1. Stud Spacing: 48” or as required for insulated metal panel support, 24 inches other locations.

C. Set studs plumb, except as needed for diagonal bracing or required for non-plumb walls or warped surfaces and similar requirements.

D. Isolate non-load-bearing steel framing from building structure to prevent transfer of vertical loads while providing lateral support.
1. Install single-leg deflection tracks and anchor to building structure.
2. Install double deep-leg deflection tracks and anchor outer track to building structure.
3. Connect vertical deflection clips to infill studs and anchor to building structure.

E. Install horizontal bridging in wall studs, spaced in rows indicated on shop drawings but not more than 48 inches apart. Fasten at each stud intersection.
1. Top Bridging for Single Deflection Track: Install row of horizontal bridging within 12 inches of single deflection track. Install a combination of flat, taut, steel sheet straps of width and thickness indicated and stud or stud-track solid blocking of width and thickness matching studs. Fasten flat straps to stud flanges and secure solid blocking to stud webs or flanges.
a. Install solid blocking at every other stud.

2. Bridging: Cold-rolled steel channel, welded or mechanically fastened to webs of punched studs.
3. Bridging: Combination of flat, taut, steel sheet straps of width and thickness indicated and stud-track solid blocking of width and thickness to match studs. Fasten flat straps to stud flanges and secure solid blocking to stud webs or flanges.

F. Install miscellaneous framing and connections, including stud kickers, web stiffeners, clip angles, continuous angles, anchors, fasteners, and stud girts, to provide a complete and stable wall-framing system.

3.05 FIELD QUALITY CONTROL

A. Testing: Owner will engage a qualified independent testing and inspecting agency to perform field tests and inspections and prepare test reports.

B. Field and shop welds will be subject to testing and inspecting.

C. Testing agency will report test results promptly and in writing to Contractor and Architect.

D. Remove and replace work where test results indicate that it does not comply with specified requirements.

E. Additional testing and inspecting, at Contractor's expense, will be performed to determine compliance of replaced or additional work with specified requirements.

3.06 REPAIRS AND PROTECTION

A. Galvanizing Repairs: Prepare and repair damaged galvanized coatings on fabricated and installed cold-formed metal framing with galvanized repair paint according to ASTM A780 and manufacturer's written instructions.

B. Provide final protection and maintain conditions, in a manner acceptable to manufacturer and installer, that ensure that cold-formed metal framing is without damage or deterioration at time of Substantial Completion.

END OF SECTION 05 40 00

SECTION 055000 - METAL FABRICATIONS

PART 1 - GENERAL

1.01 RELATED DOCUMENTS

A. The Contractor, Subcontractors, and/or suppliers providing goods or services referenced in or related to this Section shall also be bound by the Documents identified in Division 01 Section “Summary of Work.”

1.02 SUMMARY

A. This Section includes the following:

1. Steel framing and supports for mechanical and electrical equipment.
2. Steel framing and supports for applications where framing and supports are not specified in other Sections.
3. Miscellaneous steel trim including steel angle corner guards and steel edgings.
4. Metal bollards.
5. Roof ladder.

B. Products furnished, but not installed, under this Section include the following:

1. Loose steel lintels.
2. Anchor bolts, steel pipe sleeves, and wedge-type inserts indicated to be cast into concrete or built into unit masonry.

C. Related Sections include the following:

1. Division 03 Section "Cast-in-Place Concrete" for installing anchor bolts, steel pipe sleeves, wedge-type inserts and other items indicated to be cast into concrete.
2. Division 04 Section "Unit Masonry" for installing loose lintels, anchor bolts, and other items indicated to be built into unit masonry.
3. Division 05 Section "Metal Stairs."
4. Division 09 Section “Painting” for field finishing metal fabrications.

1.03 COORDINATION

A. Coordinate selection of shop primers with topcoats to be applied over them. Comply with paint and coating manufacturers' written recommendations to ensure that shop primers and topcoats are compatible with one another.

B. Coordinate installation of anchorages for metal fabrications. Furnish setting drawings, templates, and directions for installing anchorages, including sleeves, concrete inserts, anchor bolts, and items with integral anchors, that are to be embedded in concrete or masonry. Deliver such items to Project site in time for installation.

1.04 ACTION SUBMITTALS

A. Product Data: For the following:

1. Paint products.
2. Grout.

B. Shop Drawings: Show fabrication and installation details. Include plans, elevations, sections, and details of metal fabrications and their connections. Show anchorage and accessory items.

1. Include plans, elevations, sections, and details of metal fabrications and their connections. Show anchorage and accessory items.
2. Provide templates for anchors and bolts specified for installation under other Sections.
3. For installed products indicated to comply with design loads, include structural analysis data signed and sealed by the qualified professional engineer licensed in the State of Rhode Island responsible for their preparation.
4. Provide Shop Drawings for the following:

a. Steel framing and supports for overhead doors.
b. Steel framing and supports for mechanical and electrical equipment.
c. Steel framing and supports for applications where framing and supports are not specified in other Sections.
d. Miscellaneous steel trim including steel angle corner guards and steel edgings.
e. Metal bollards.
f. Loose steel lintels.

1.05 INFORMATIONAL SUBMITTALS

A. Welding certificates.

B. Qualification Data: For professional engineer.

C. Paint Compatibility Certificates: From manufacturers of topcoats applied over shop primers, certifying that shop primers are compatible with topcoats.

D. Research/Evaluation Reports: For post-installed anchors, from ICC-ES

1.06 QUALITY ASSURANCE

A. Welding Qualifications: Qualify procedures and personnel according to AWS D1.1/D1.1M, "Structural Welding Code - Steel."

1.07 PROJECT CONDITIONS

A. Field Measurements: Verify actual locations of walls and other construction contiguous with metal fabrications by field measurements before fabrication and indicate measurements on Shop Drawings.

1. Provide allowance for trimming and fitting at site.

PART 2 - PRODUCTS

2.01 PERFORMANCE REQUIREMENTS

A. Thermal Movements: Provide exterior metal fabrications that allow for thermal movements resulting from the following maximum change (range) in ambient and surface temperatures by preventing buckling, opening of joints, overstressing of components, failure of connections, and other detrimental effects. Base engineering calculation on surface temperatures of materials due to both solar heat gain and nighttime-sky heat loss.

1. Temperature Change (Range): 120 deg F, ambient; 180 deg F, material surfaces.

2.02 METALS, GENERAL

A. Metal Surfaces, General: Provide materials with smooth, flat surfaces, unless otherwise indicated. For metal fabrications exposed to view in the completed Work, provide materials without seam marks, roller marks, rolled trade names, or blemishes.

2.03 FERROUS METALS

A. Steel Plates, Shapes, and Bars: ASTM A 36/A 36M.

B. Steel Pipe: ASTM A 53/A 53M, standard weight (Schedule 40), unless another weight is indicated or required by structural loads.

2.04 FASTENERS

A. General: Unless otherwise indicated, provide Type 304 stainless-steel fasteners for exterior use and zinc-plated fasteners with coating complying with ASTM B 633, Class Fe/Zn 5, at exterior walls. Provide stainless-steel fasteners for fastening aluminum. Select fasteners for type, grade, and class required.

B. Steel Bolts and Nuts: Regular hexagon-head bolts, ASTM A 307, Grade A; with hex nuts, ASTM A 563; and, where indicated, flat washers.

C. Stainless-Steel Bolts and Nuts: Regular hexagon-head annealed stainless-steel bolts, nuts and, where indicated, flat washers; ASTM F 593 for bolts and ASTM F 594 for nuts, Alloy Group 1.

D. Anchor Bolts: ASTM F 1554, Grade 36.

1. Provide hot-dip or mechanically deposited, zinc-coated anchor bolts where item being fastened is indicated to be galvanized.

E. Eyebolts: ASTM A 489.

F. Machine Screws: ASME B18.6.3.

G. Lag Bolts: ASME B18.2.1.

H. Wood Screws: Flat head, ASME B18.6.1.

I. Plain Washers: Round, ASME B18.22.1.

J. Lock Washers: Helical, spring type, ASME B18.21.1.

K. Cast-in-Place Anchors in Concrete: Anchors capable of sustaining, without failure, a load equal to four times the load imposed, as determined by testing according to ASTM E 488, conducted by a qualified independent testing agency.

1. Threaded or wedge type; galvanized ferrous castings, either ASTM A 47/A 47M malleable iron or ASTM A 27/A 27M cast steel. Provide bolts, washers, and shims as needed, hot-dip galvanized per ASTM A 153/A 153M.

L. Expansion Anchors: Anchor bolt and sleeve assembly with capability to sustain, without failure, a load equal to six times the load imposed when installed in unit masonry and four times the load imposed when installed in concrete, as determined by testing according to ASTM E 488, conducted by a qualified independent testing agency.

1. Material for Anchors in Interior Locations: Carbon-steel components zinc-plated to comply with ASTM B 633, Class Fe/Zn 5.
2. Material for Anchors in Exterior Locations: Alloy Group 1 stainless-steel bolts complying with ASTM F 593 and nuts complying with ASTM F 594.

2.05 MISCELLANEOUS MATERIALS

A. Welding Rods and Bare Electrodes: Select according to AWS specifications for metal alloy welded.

B. Universal Shop Primer: Fast-curing, lead- and chromate-free, universal modified-alkyd primer complying with MPI#79.

C. Galvanizing Repair Paint: High-zinc-dust-content paint for regalvanizing welds in steel, complying with SSPC-Paint 20.

D. Bituminous Paint: Cold-applied asphalt emulsion complying with ASTM D 1187.

E. Nonshrink, Nonmetallic Grout: Factory-packaged, nonstaining, noncorrosive, nongaseous grout complying with ASTM C 1107. Provide grout specifically recommended by manufacturer for interior and exterior applications.

2.06 FABRICATION, GENERAL

A. Shop Assembly: Preassemble items in the shop to greatest extent possible. Disassemble units only as necessary for shipping and handling limitations. Use connections that maintain structural value of joined pieces. Clearly mark units for reassembly and coordinated installation.

B. Cut, drill, and punch metals cleanly and accurately. Remove burrs and ease edges to a radius of approximately 1/32 inch, unless otherwise indicated. Remove sharp or rough areas on exposed surfaces.

C. Form bent-metal corners to smallest radius possible without causing grain separation or otherwise impairing work.

D. Form exposed work true to line and level with accurate angles and surfaces and straight edges.

E. Weld corners and seams continuously to comply with the following:

1. Use materials and methods that minimize distortion and develop strength and corrosion resistance of base metals.
2. Obtain fusion without undercut or overlap.
3. Remove welding flux immediately.
4. At exposed connections, finish exposed welds and surfaces smooth and blended so no roughness shows after finishing and contour of welded surface matches that of adjacent surface.

F. Form exposed connections with hairline joints, flush and smooth, using concealed fasteners where possible. Where exposed fasteners are required, use Phillips flat-head (countersunk) screws or bolts, unless otherwise indicated. Locate joints where least conspicuous.

G. Fabricate seams and other connections that will be exposed to weather in a manner to exclude water. Provide weep holes where water may accumulate.

H. Cut, reinforce, drill, and tap metal fabrications as indicated to receive finish hardware, screws, and similar items.

I. Provide for anchorage of type indicated; coordinate with supporting structure. Space anchoring devices to secure metal fabrications rigidly in place and to support indicated loads.

1. Where units are indicated to be cast into concrete or built into masonry, equip with integrally welded steel strap anchors, 1/8 by 1-1/2 inches, with a minimum 6-inch embedment and 2-inch hook, not less than 8 inches from ends and corners of units and 24 inches o.c., unless otherwise indicated.

2.07 MISCELLANEOUS FRAMING AND SUPPORTS

A. General: Provide steel framing and supports not specified in other Sections as needed to complete the Work.

B. Fabricate units from steel shapes, plates, and bars of welded construction, unless otherwise indicated. Fabricate to sizes, shapes, and profiles indicated and as necessary to receive adjacent construction retained by framing and supports. Cut, drill, and tap units to receive hardware, hangers, and similar items.

1. Furnish inserts if units are installed after concrete is placed.

C. Galvanize miscellaneous framing and supports where indicated.

2.08 LOOSE STEEL LINTELS

A. Fabricate loose steel lintels from steel angles and shapes of size indicated for openings and recesses in masonry walls and partitions at locations indicated. Weld adjoining members together to form a single unit where indicated.

B. Size loose lintels to provide bearing length at each side of openings equal to 1/12 of clear span but not less than 8 inches, unless otherwise indicated.

C. Galvanize loose steel lintels located in exterior walls.

2.09 MISCELLANEOUS STEEL TRIM

A. Unless otherwise indicated, fabricate units from steel shapes, plates, and bars of profiles shown with continuously welded joints and smooth exposed edges. Miter corners and use concealed field splices where possible.

B. Provide cutouts, fittings, and anchorages as needed to coordinate assembly and installation with other work.

1. Provide with integrally welded steel strap anchors for embedding in concrete or masonry construction.

C. Galvanize exterior miscellaneous steel trim.

2.10 METAL BOLLARDS

A. Fabricate metal bollards from Schedule 40 steel pipe.

1. Cap bollards with 1/4-inch- thick, plate with domed top.

B. Fabricate bollards with 1/2-inch- thick, steel baseplates for bolting to concrete slab. Drill baseplates at all four corners for 3/4-inch anchor bolts.

1. Where bollards are to be anchored to sloping concrete slabs, angle baseplates for plumb alignment of bollards.

2.11 ROOF LADDERS

A. Ladders to be 1'-6" wide with vertical stringers of 2½"x 3/8" steel bar and horizontal rungs of ¾" steel rod at 12" o.c. carried through stringers and welded continuously on the outside.

2.12 FINISHES, GENERAL

A. Comply with NAAMM's "Metal Finishes Manual for Architectural and Metal Products" for recommendations for applying and designating finishes.

B. Finish metal fabrications after assembly.

2.13 STEEL AND IRON FINISHES

A. Galvanizing: Hot-dip galvanize items as indicated to comply with applicable standard listed below:

1. ASTM A 123/A 123M, for galvanizing steel and iron products.
2. ASTM A 153/A 153M, for galvanizing steel and iron hardware.

B. Preparation for Shop Priming: Prepare uncoated ferrous-metal surfaces to comply with minimum requirements indicated below for SSPC surface preparation specifications and environmental exposure conditions of installed metal fabrications:

1. Exteriors (SSPC Zone 1B): SSPC-SP 6/NACE No. 3, "Commercial Blast Cleaning."
2. Interiors (SSPC Zone 1A): SSPC-SP 3, "Power Tool Cleaning."

C. Shop Priming: Apply shop primer to uncoated surfaces of metal fabrications, except those with galvanized finishes and those to be embedded in concrete, sprayed-on fireproofing, or masonry,

unless otherwise indicated. Comply with SSPC-PA 1, "Paint Application Specification No. 1: Shop, Field, and Maintenance Painting of Steel," for shop painting.

1. Stripe paint corners, crevices, bolts, welds, and sharp edges.

PART 3 - EXECUTION

3.01 INSTALLATION, GENERAL

A. Cutting, Fitting, and Placement: Perform cutting, drilling, and fitting required for installing metal fabrications. Set metal fabrications accurately in location, alignment, and elevation; with edges and surfaces level, plumb, true, and free of rack; and measured from established lines and levels.

B. Fit exposed connections accurately together to form hairline joints. Weld connections that are not to be left as exposed joints but cannot be shop welded because of shipping size limitations. Do not weld, cut, or abrade surfaces of exterior units that have been hot-dip galvanized after fabrication and are for bolted or screwed field connections.

C. Field Welding: Comply with the following requirements:

1. Use materials and methods that minimize distortion and develop strength and corrosion resistance of base metals.
2. Obtain fusion without undercut or overlap.
3. Remove welding flux immediately.
4. At exposed connections, finish exposed welds and surfaces smooth and blended so no roughness shows after finishing and contour of welded surface matches that of adjacent surface.

D. Fastening to In-Place Construction: Provide anchorage devices and fasteners where metal fabrications are required to be fastened to in-place construction. Provide threaded fasteners for use with concrete and masonry inserts, toggle bolts, through bolts, lag bolts, wood screws, and other connectors.

E. Provide temporary bracing or anchors in formwork for items that are to be built into concrete, masonry, or similar construction.

3.02 INSTALLING MISCELLANEOUS FRAMING AND SUPPORTS

A. General: Install framing and supports to comply with requirements of items being supported, including manufacturers' written instructions and requirements indicated on Shop Drawings.

3.03 INSTALLATION OF METAL BOLLARDS

A. Fill metal-capped bollards solidly with concrete and allow concrete to cure seven days before installing.

B. Anchor bollards to existing construction with anchor bolts. Provide four 3/4-inch bolts at each bollard unless otherwise indicated.

1. Embed anchor bolts at least 4 inches in concrete.

3.04 DJUSTING AND CLEANING

A. Touchup Painting: Immediately after erection, clean field welds, bolted connections, and abraded areas. Paint uncoated and abraded areas with the same material as used for shop painting to comply with SSPC-PA 1 for touching up shop-painted surfaces.

1. Apply by brush or spray to provide a minimum 2.0-mil dry film thickness.

B. Galvanized Surfaces: Clean field welds, bolted connections, and abraded areas and repair galvanizing to comply with ASTM A 780.

END OF SECTION 055000

SECTION 055213 - PIPE AND TUBE RAILINGS

PART 1 - GENERAL

1.01 RELATED DOCUMENTS

A. The Contractor, Subcontractors, and/or suppliers providing goods or services referenced in or related to this Section shall also be bound by the Documents identified in Division 01 Section "Summary of Work."

1.02 SUMMARY

A. Section Includes:

1. Steel pipe railings at exterior ramp/stair.

1.03 PERFORMANCE REQUIREMENTS

A. Delegated Design: Design railings, including comprehensive engineering analysis by a qualified professional engineer, using performance requirements and design criteria indicated.

B. Structural Performance: Railings shall withstand the effects of gravity loads and the following loads and stresses within limits and under conditions indicated:

1. Handrails:

a. Uniform load of 50 lbf/ ft. applied in any direction.
b. Concentrated load of 200 lbf applied in any direction.
c. Uniform and concentrated loads need not be assumed to act concurrently.

C. Thermal Movements: Allow for thermal movements from ambient and surface temperature changes acting on exterior metal fabrications by preventing buckling, opening of joints, overstressing of components, failure of connections, and other detrimental effects.

1. Temperature Change: 120 deg F, ambient; 180 deg F, material surfaces.

D. Control of Corrosion: Prevent galvanic action and other forms of corrosion by insulating metals and other materials from direct contact with incompatible materials.

1.04 ACTION SUBMITTALS

A. Product Data: For the following:

1. Grout, anchoring cement, and paint products.

B. Shop Drawings: Include plans, elevations, sections, details, and attachments to other work.

C. Delegated-Design Submittal: For installed products indicated to comply with performance requirements and design criteria, including analysis data signed and sealed by the qualified professional engineer responsible for their preparation.

1.05 INFORMATIONAL SUBMITTALS

A. Qualification Data: For qualified professional engineer, licensed in the State of Rhode Island.

B. Welding certificates.

C. Product Test Reports: Based on evaluation of comprehensive tests performed by a qualified testing agency, according to ASTM E 894 and ASTM E 935.

D. Certificate of Compliance for Items Coated by Galvanizer: Submit notarized Certificate of Compliance signed by the galvanizer, indicating compliance with requirements of specifications. Include scope of services provided, and quantity and itemized description of items processed.

E. Certificate of Compliance for Shop Drawing Review by Galvanizer: Submit galvanizer's certification that shop drawings for metal fabrications to receive metal coatings have been reviewed and that fabrications are acceptable to galvanizer for proper application of galvanizing and metal coatings. All drawings should be signed by the galvanizer to indicate acceptance of design for galvanizing.

F. Certificate of Compliance of Item Identification by Galvanizer: The galvanizer shall mark all lots of material with a clearly visible tag indicating the name of the galvanizer, the type and weight of the coating, and the applicable ASTM Specification Numbers.

1. Submit certification of compliance that items have been tagged.
2. Galvanizer/applicator shall supply a certificate of compliance that all coatings have been performed in accordance with SSPC Qualification Procedure Standard QP 3.

G. Warranty: Special warranty included in this Section.

H. Recycled, Recyclable, Bio-based and/or Indigenous Content

1. Not less than 65 percent of the total building materials used in the project shall comply with the Products Requirements in Section 08113

2. Measurement of percentage may be based on mass, volume or cost, but measurement must be consistent across all materials

3. Documentation of the portion that each component, or assemble contributes to the total percentage shall be submitted to Architect & Owner as noted in Section 08113

1.06 QUALITY ASSURANCE

A. Source Limitations: Obtain each type of railing from single source from single manufacturer.

B. Welding Qualifications: Qualify procedures and personnel according to AWS D1.1/D1.1M, "Structural Welding Code - Steel."

C. Galvanizer: Engage the services of a qualified galvanizer who has demonstrated a minimum of ten years' experience in the successful application of galvanized coatings specified in this specification in the facility where the work is to be performed and who will apply the coatings within the same facility.

1. Galvanizing shall be performed by a company with a minimum of ten years' experience in the successful application of hot-dip galvanizing utilizing the dry kettle process.

D. Pre-Construction Conference for Metal Fabrications to Receive Factory-Applied Metal Coatings: Schedule a meeting to be attended by Contractor, Architect, fabricator, and galvanizer. Agenda to include the following:

1. Project schedule, scope of services, coordination between fabricator and galvanizer, finish of surfaces, application of coatings, submittals, and approvals.

1.07 PROJECT CONDITIONS

A. Field Measurements: Verify actual locations of walls and other construction contiguous with metal fabrications by field measurements before fabrication.

1.08 COORDINATION AND SCHEDULING

A. Coordinate installation of anchorages for railings. Furnish setting drawings, templates, and directions for installing anchorages, including sleeves, concrete inserts, anchor bolts, and items with integral anchors, that are to be embedded in concrete or masonry. Deliver such items to Project site in time for installation.

B. Coordination between Fabricator and Galvanizer: Prior to fabrication and final submittal of shop drawings, direct fabricators to submit shop drawings to the galvanizer for all metal fabrications to receive factory-applied metal coatings. Direct galvanizer to review fabricator's shop drawings for suitability of materials for galvanizing and coatings and coordinate any required modifications to fabrications required to be performed by the fabricator.

1.09 WARRANTY

A. Special Warranty: Manufacturer's standard form for galvanizing of railings, in which manufacturer warrants the galvanizing to be free from 10% or more visible rust within the specified warranty period.

1. Warranty Period: Twenty (20) years from date of Substantial Completion.

PART 2 - PRODUCTS

2.01 METALS, GENERAL

A. Metal Surfaces, General: Provide materials with smooth surfaces, without seams, marks, holes

marks, rolled trade names, stains, discolorations, or blemishes.

B. Brackets, Flanges, and Anchors: Cast or formed metal of same type of material and finish as supported rails unless otherwise indicated.

2.02 STEEL AND IRON

A. Pipe: ASTM A 53/A 53M, Type F or Type S, Grade A, Standard Weight (Schedule 40), unless another grade and weight are required by structural loads.

1. Provide galvanized finish.

B. Plates, Shapes, and Bars: ASTM A 36/A 36M.

2.03 FASTENERS

A. General: Provide the following:

1. Hot-Dip Galvanized Railings: Type 304 stainless-steel or hot-dip zinc-coated steel fasteners complying with ASTM A 153/A 153M or ASTM F 2329 for zinc coating.

B. Fasteners for Anchoring Railings to Other Construction: Select fasteners of type, grade, and class required to produce connections suitable for anchoring railings to other types of construction indicated and capable of withstanding design loads.

C. Post-Installed Anchors: Torque-controlled expansion anchors capable of sustaining, without failure, a load equal to six times the load imposed when installed in unit masonry and four times the load imposed when installed in concrete, as determined by testing according to ASTM E 488, conducted by a qualified independent testing agency.

2.04 MISCELLANEOUS MATERIALS

A. Welding Rods and Bare Electrodes: Select according to AWS specifications for metal alloy welded.

B. Etching Cleaner for Galvanized Metal: Complying with MPI#25.

C. Galvanizing Repair Paint: High-zinc-dust-content paint complying with SSPC-Paint 20 and compatible with paints specified to be used over it.

D. Nonshrink, Nonmetallic Grout: Factory-packaged, nonstaining, noncorrosive, nongaseous grout complying with ASTM C 1107. Provide grout specifically recommended by manufacturer for interior and exterior applications.

2.05 FABRICATION

A. General: Fabricate railings to comply with requirements indicated for design, dimensions, member sizes and spacing, details, finish, and anchorage, but not less than that required to support structural loads.

B. Assemble railings in the shop to greatest extent possible to minimize field splicing and assembly. Disassemble units only as necessary for shipping and handling limitations. Clearly mark units for reassembly and coordinated installation. Use connections that maintain structural value of joined pieces.

C. Cut, drill, and punch metals cleanly and accurately. Remove burrs and ease edges to a radius of approximately 1/32 inch unless otherwise indicated. Remove sharp or rough areas on exposed surfaces.

D. Form work true to line and level with accurate angles and surfaces.

E. Fabricate connections that will be exposed to weather in a manner to exclude water. Provide weep holes where water may accumulate.

F. Cut, reinforce, drill, and tap as indicated to receive finish hardware, screws, and similar items.

G. Connections: Fabricate railings with welded connections unless otherwise indicated.

H. Welded Connections: Cope components at connections to provide close fit, or use fittings designed for this purpose. Weld all around at connections, including at fittings.

1. Use materials and methods that minimize distortion and develop strength and corrosion resistance of base metals.
2. Obtain fusion without undercut or overlap.
3. Remove flux immediately.
4. At exposed connections, finish exposed surfaces smooth and blended so no roughness shows after finishing and welded surface matches contours of adjoining surfaces.

I. Form changes in direction as follows:

1. By bending.

J. Bend members in jigs to produce uniform curvature for each configuration required; maintain cross section of member throughout entire bend without buckling, twisting, cracking, or otherwise deforming exposed surfaces of components.

K. Close exposed ends of railing members with prefabricated end fittings.

L. Provide inserts and other anchorage devices for connecting railings to concrete or masonry work. Fabricate anchorage devices capable of withstanding loads imposed by railings. Coordinate anchorage devices with supporting structure.

M. For railing posts set in concrete, provide steel sleeves not less than 6 inches long with inside dimensions not less than 1/2 inch greater than outside dimensions of post, with metal plate forming bottom closure.

2.06 FINISHES, GENERAL

A. Comply with NAAMM's "Metal Finishes Manual for Architectural and Metal Products" for recommendations for applying and designating finishes.

B. Protect mechanical finishes on exposed surfaces from damage by applying a strippable, temporary protective covering before shipping.

C. Appearance of Finished Work: Variations in appearance of abutting or adjacent pieces are acceptable if they are within one-half of the range of approved Samples. Noticeable variations in the same piece are not acceptable. Variations in appearance of other components are acceptable if they are within the range of approved Samples and are assembled or installed to minimize contrast.

D. Provide exposed fasteners with finish matching appearance, including color and texture, of railings.

2.07 STEEL AND IRON FINISHES

A. Galvanized Railings:

1. Hot-dip galvanize exterior steel and iron railings, including hardware, after fabrication.
2. Hot-dip galvanize indicated steel and iron railings, including hardware, after fabrication.
3. Comply with ASTM A 123/A 123M for hot-dip galvanized railings.
4. Comply with ASTM A 153/A 153M for hot-dip galvanized hardware.
5. Do not quench or apply post galvanizing treatments that might interfere with paint adhesion.
6. Fill vent and drain holes that will be exposed in the finished Work, unless indicated to remain as weep holes, by plugging with zinc solder and filing off smooth.

B. For galvanized railings, provide hot-dip galvanized fittings, brackets, fasteners, sleeves, and other ferrous components.

1. Inspect all galvanized materials for compliance with requirements and mark with stamp indicating the name of the galvanizer, ASTM specification, and weight of the zinc coating in oz./sq.ft.

   a. Rugosity: Not greater than 4 rug (16-20 microns of variation) when measured by a profilometer over a 1-inch straight line.
   b. Create a 1-3 mil profile on the surface to provide adhesion of thermoset coating.

2. Where galvanizing cannot be completed prior to fabrication, weld joints after fabrication, grind smooth and finish with applied galvanizing recommended by manufacturer.

PART 3 - EXECUTION

3.01 INSTALLATION, GENERAL

A. Fit exposed connections together to form tight, hairline joints.

B. Perform cutting, drilling, and fitting required for installing railings. Set railings accurately in location, alignment, and elevation; measured from established lines and levels and free of rack.

1. Do not weld, cut, or abrade surfaces of railing components that have been coated or finished after fabrication and that are intended for field connection by mechanical or other means without further cutting or fitting.
2. Set posts plumb within a tolerance of 1/16 inch in 3 feet.
3. Align rails so variations from level for horizontal members and variations from parallel with rake of steps and ramps for sloping members do not exceed 1/4 inch in 12 feet.

C. Adjust railings before anchoring to ensure matching alignment at abutting joints.

D. Fastening to In-Place Construction: Use anchorage devices and fasteners where necessary for securing railings and for properly transferring loads to in-place construction.

3.02 RAILING CONNECTIONS

A. Welded Connections: Use fully welded joints for permanently connecting railing components. Comply with requirements for welded connections in "Fabrication" Article whether welding is performed in the shop or in the field.

B. Expansion Joints: Install expansion joints at locations indicated but not farther apart than required to accommodate thermal movement. Provide slip-joint internal sleeve extending 2 inches beyond joint on either side, fasten internal sleeve securely to one side, and locate joint within 6 inches of post.

3.03 ANCHORING POSTS

A. Use metal sleeves preset and anchored into concrete for installing posts. After posts have been inserted into sleeves, fill annular space between post and sleeve with nonshrink, nonmetallic grout, mixed and placed to comply with anchoring material manufacturer's written instructions.

B. Form or core-drill holes not less than 5 inches deep and 3/4 inch larger than OD of post for installing posts in concrete. Clean holes of loose material, insert posts, and fill annular space between post and concrete with nonshrink, nonmetallic grout, mixed and placed to comply with anchoring material manufacturer's written instructions.

C. Leave anchorage joint exposed with 1/8-inch buildup, sloped away from post.

3.04 APPLICATION OF FACTORY-APPLIED METAL COATINGS

A. Galvanizing Application: Galvanize materials in accordance with specified standards and this specification. Galvanizing shall provide an acceptable substrate for applied coatings. The dry kettle process shall be used to eliminate any flux inclusions on the surface of the galvanized material.

B. Prior to galvanizing, the steel shall be immersed in a pre-flux solution (zinc ammonium chloride). The pre flux tank must be 12 to 14 Baumé and contain less than 0.4 percent iron. The wet kettle process shall be prohibited.

C. To provide the galvanized surface required, the following procedures shall be implemented:

1. A monitoring recorder shall be utilized and inspected regularly to observe any variances in the galvanizing bath temperature.
2. The pickling tanks shall contain hydrochloric acid with an iron content less than 8 percent and zinc content less than 3 percent. Titrations shall be taken weekly at a minimum.
3. All chemicals and zinc shall be tested at least once a week to determine compliance with ASTM standards. All testing shall be done using atomic absorption spectrometry or x-ray fluorescence (XRF) equipment at a lab in the galvanizing plant.

3.05 ADJUSTING AND CLEANING

A. Touch-Up and Repair: For damaged and field-welded metal coated surfaces, clean welds, bolted connections and abraded areas.

1. For galvanized surfaces, apply organic zinc repair paint complying with requirements of ASTM A 780, modified to 95 percent zinc in dry film. Galvanizing repair paint shall have 95 percent zinc by weight. Thickness of applied galvanizing repair paint shall be not less than coating thickness required by ASTM A 123 or A 153 as applicable. Touch-up of galvanized surfaces with silver paint, brite paint, or aluminum paints is not acceptable.
2. A touch-up repair kit or touchup instructions shall be provided to the Owner for each type of factory-applied finish.

3.06 PROTECTION

A. Protect finishes of railings from damage during construction period with temporary protective coverings approved by railing manufacturer. Remove protective coverings at time of Substantial Completion.

END OF SECTION 05 52 13

DIVISION 06

SECTION 061053 - MISCELLANEOUS ROUGH CARPENTRY

PART 1 - GENERAL

1.01 RELATED DOCUMENTS

A. The Contractor, Subcontractors, and/or suppliers providing goods or services referenced in or related to this Section shall also be bound by the Documents identified in Division 01 Section "Summary of Work."

1.02 SUMMARY

A. This Section includes the following:

1. Wood blocking for installation of casework.
2. Wood blocking for toilet accessories.
3. Plywood backing panels.

1.03 DEFINITIONS

A. Dimension Lumber: Lumber of 2 inches nominal or greater but less than 5 inches nominal in least dimension.

B. Lumber grading agencies, and the abbreviations used to reference them, include the following:

1. NeLMA: Northeastern Lumber Manufacturers' Association.
2. NLGA: National Lumber Grades Authority.

1.04 ACTION SUBMITTALS

A. Product Data: For each type of process and factory-fabricated product. Indicate component materials and dimensions and include construction and application details.

1. Include data for fire-retardant treatment from chemical treatment manufacturer and certification by treating plant that treated materials comply with requirements. Include physical properties of treated materials based on testing by a qualified independent testing agency.
2. For products receiving a waterborne treatment, include statement that moisture content of treated materials was reduced to levels specified before shipment to Project site.
3. Include copies of warranties from chemical treatment manufacturers for each type of treatment.

1.05 INFORMATIONAL SUBMITTALS

A. Evaluation Reports: For the following, from ICC-ES:

1. Fire-retardant-treated wood.

1. Measurement of percentage may be based on mass, volume or cost, but measurement must be consistent across all materials

2. Documentation of the portion that each component, or assemble contributes to the total percentage shall be submitted to Architect & Owner as noted in Section 08113

2. Power-driven fasteners.
3. Powder-actuated fasteners.
4. Expansion anchors.

1.06 QUALITY ASSURANCE

A. Testing Agency Qualifications: For testing agency providing classification marking for fire-retardant-treated material, an inspection agency acceptable to authorities having jurisdiction that periodically performs inspections to verify that the material bearing the classification marking is representative of the material tested.

1.07 DELIVERY, STORAGE, AND HANDLING

A. Stack lumber flat with spacers between each bundle to provide air circulation. Provide for air circulation around stacks and under coverings.

B. Deliver interior wood materials that are to be exposed to view only after building is enclosed and weatherproof, wet work other than painting is dry, and HVAC system is operating and maintaining temperature and humidity at occupancy levels.

PART 2 - PRODUCTS

2.01 WOOD PRODUCTS, GENERAL

A. Lumber: DOC PS 20 and applicable rules of grading agencies indicated. If no grading agency is indicated, provide lumber that complies with the applicable rules of any rules-writing agency certified by the ALSC Board of Review. Provide lumber graded by an agency certified by the ALSC Board of Review to inspect and grade lumber under the rules indicated.

1. Factory mark each piece of lumber with grade stamp of grading agency.
2. Where nominal sizes are indicated, provide actual sizes required by DOC PS 20 for moisture content specified. Where actual sizes are indicated, they are minimum dressed sizes for dry lumber.
3. Provide dressed lumber, S4S, unless otherwise indicated.

B. Maximum Moisture Content of Lumber: 19 percent.

C. Plywood: DOC PS 1.

1. Thickness: As needed to comply with requirements specified, but not less than thickness indicated.
2. Factory mark panels to indicate compliance with applicable standard.

2.02 FIRE-RETARDANT-TREATED MATERIALS

A. General: Where fire-retardant-treated materials are indicated, use materials complying with requirements in this article, that are acceptable to authorities having jurisdiction, and with fire-test-response characteristics specified as determined by testing identical products per test method indicated by a qualified testing agency.

B. Fire-Retardant-Treated Lumber and Plywood by Pressure Process: Products with a flame spread index of 25 or less when tested according to ASTM E 84, and with no evidence of significant progressive combustion when the test is extended an additional 20 minutes, and with the flame front not extending more than 10.5 feet beyond the centerline of the burners at any time during the test.

1. Use treatment that does not promote corrosion of metal fasteners.
2. Interior Type A: Treated materials shall have a moisture content of 28 percent or less when tested according to ASTM D 3201 at 92 percent relative humidity. Use where exterior type is not indicated.
3. Design Value Adjustment Factors: Treated lumber shall be tested according to ASTM D 5664, and design value adjustment factors shall be calculated according to ASTM D 6841.

C. Kiln-dry lumber after treatment to a maximum moisture content of 19 percent. Kiln-dry plywood after treatment to a maximum moisture content of 15 percent.

D. Identify fire-retardant-treated wood with appropriate classification marking of testing and inspecting agency acceptable to authorities having jurisdiction.

E. Application: Treat the following:

1. Concealed blocking in wall framing.
2. Plywood backing panels.

F. Products: Subject to compliance with requirements, provide products by one of the following:

1. Dricon.
2. Hoover Treated Wood Products, Inc.
3. Koppers Performance Chemicals.

2.03 MISCELLANEOUS LUMBER

A. General: Provide miscellaneous lumber indicated and lumber for support or attachment of other construction, including the following:

1. Blocking.
2. Nailers.
3. Furring.

B. For items of dimension lumber size, provide Construction or No. 2 lumber with 15 percent maximum moisture content and the following species:

1. Hem-fir (north); NLGA.

C. For blocking not used for attachment of other construction Utility, Stud, or No. 3 grade lumber of any species may be used provided that it is cut and selected to eliminate defects that will interfere with its attachment and purpose.

D. For blocking and nailers used for attachment of other construction, select and cut lumber to eliminate knots and other defects that will interfere with attachment of other work.

E. For furring strips for installing plywood or hardboard paneling, select boards with no knots capable of producing bent-over nails and damage to paneling.

2.04 PLYWOOD BACKING PANELS

A. Telephone and Electrical Equipment Backing Panels: DOC PS 1, Exposure 1, C-D Plugged, fire-retardant treated, in thickness indicated or, if not indicated, not less than 1/2-inch nominal thickness.

2.05 FASTENERS

A. General: Provide fasteners of size and type indicated that comply with requirements specified in this Article for material and manufacture.

1. Where carpentry is exposed to weather, in ground contact, fire retardant treated, or in area of high relative humidity, provide fasteners of with hot-dip zinc coating complying with ASTM A 153/A 153M.

B. Nails, Brads, and Staples: ASTM F 1667.

C. Power-Driven Fasteners: NES NER-272.

D. Wood Screws: ASME B18.6.1.

E. Lag Bolts: ASME B18.2.1.

F. Bolts: Steel bolts complying with ASTM A 307, Grade A; with ASTM A 563 hex nuts and, where indicated, flat washers.

G. Expansion Anchors: Anchor bolt and sleeve assembly of material indicated below with capability to sustain, without failure, a load equal to 6 times the load imposed when installed in unit masonry assemblies and equal to 4 times the load imposed when installed in concrete as determined by testing per ASTM E 488 conducted by a qualified independent testing and inspecting agency.

1. Material: Stainless steel with bolts and nuts complying with ASTM F 593 and ASTM F 594, Alloy Group 1 or 2.

PART 3 - EXECUTION

3.01 INSTALLATION, GENERAL

A. Set carpentry to required levels and lines, with members plumb, true to line, cut, and fitted. Fit carpentry to other construction; scribe and cope as needed for accurate fit. Locate nailers, blocking, and similar supports to comply with requirements for attaching other construction.

B. Provide blocking and framing as indicated and as required to support facing materials, fixtures, specialty items, and trim.

C. Sort and select lumber so that natural characteristics will not interfere with installation or with fastening other materials to lumber. Do not use materials with defects that interfere with function of member or pieces that are too small to use with minimum number of joints or optimum joint arrangement.

D. Securely attach carpentry work to substrate by anchoring and fastening as indicated, complying with the following:

1. NES NER-272 for power-driven fasteners.
2. Table 2304.9.1, "Fastening Schedule," in ICC's International Building Code.

E. Use common wire nails, unless otherwise indicated. Select fasteners of size that will not fully penetrate members where opposite side will be exposed to view or will receive finish materials. Make tight connections between members. Install fasteners without splitting wood; do not countersink nail heads, unless otherwise indicated.

3.02 WOOD BLOCKING AND NAILER INSTALLATION

A. Install where indicated and where required for attaching other work. Form to shapes indicated and cut as required for true line and level of attached work. Coordinate locations with other work involved.

B. Attach items to substrates to support applied loading. Recess bolts and nuts flush with surfaces, unless otherwise indicated.

3.03 WOOD FURRING INSTALLATION

A. Install level and plumb with closure strips at edges and openings. Shim with wood as required for tolerance of finish work.

B. Furring to Receive Plywood: Install 1-by-3-inch nominal- size furring vertically 24 inches o.c.

3.04 FIRE-RETARDANT-TREATED (FRT) MATERIALS INSTALLATION

A. Cutting to length, drilling holes, joining cuts and light sanding are permissible. It is not necessary to field treat cut ends to maintain flame spread rating.

1. Ripping, milling, and surfacing of FRT lumber is not permitted.
2. FRT plywood can be cut in either direction without loss of fire protection.

3.05 PROTECTION

A. Protect rough carpentry from weather. If, despite protection, rough carpentry becomes wet, apply EPA-registered borate treatment. Apply borate solution by spraying to comply with EPA-registered label.

END OF SECTION 06 10 53

SECTION 06 40 23 - INTERIOR ARCHITECTURAL WOODWORK

PART 1 - GENERAL

1.01 RELATED DOCUMENTS

A. The Contractor, Subcontractors, and/or suppliers providing goods or services referenced in or related to this Section shall also be bound by the Documents identified in Division 01 Section “Summary of Work.”

1.02 SUMMARY

A. This Section includes the following:

1. Plastic-laminate-clad cabinets.
2. Cabinet hardware and accessories.

B. Section also includes:

1. Wood furring, blocking, shims, and hanging strips for installing interior architectural woodwork, unless concealed within other construction before cabinet installation.

C. Related Sections include the following:

1. Division 06 Section "Miscellaneous Rough Carpentry" for wood furring, blocking, shims, fire retardant treated plywood, and hanging strips required for installing woodwork and concealed within other construction before woodwork installation.
2. Division 12 Section “Simulated Stone Countertops” for solid surfacing countertops installed with plastic laminate cabinets.

1.03 DEFINITIONS

A. Interior architectural woodwork includes wood furring, blocking, shims, and hanging strips for installing woodwork items unless concealed within other construction before woodwork installation.

B. Exposed Exterior Surfaces of Cabinets: All exterior surfaces exposed to view as follows:

1. All surfaces visible when door and drawers are closed, including knee spaces.
2. Underside of cabinet bottoms over 42 inches above finish floor, including cabinet bottoms behind light valances and the bottom edge of light valances.
3. Cabinet tops under 80 inches above finish floor, or if over 80 inches and visible from an upper level.
4. Visible front edges of stretchers, ends, divisions, tops, bottoms, shelves and nailers.
5. Sloping tops of cabinets that are visible.

C. Exposed Interior Surfaces of Cabinets: All interior surfaces exposed to view in open casework or behind glass doors as follows:

1. Shelves, including edgebanding.
2. Divisions and partitions.
3. Interior face of ends (sides), backs, and bottoms (including pull-outs).
4. Interior surfaces of cabinet top members 36 inches or more above finished floor.
5. Interior face of door and applied drawer fronts.

D. Semi-exposed Surfaces of Cabinets: Interior surfaces exposed to view only when doors or drawers are opened as follows:

1. Shelves, including edgebanding.
2. Divisions and partitions.
3. Interior face of ends (sides), backs, and bottoms (including pull-outs).
4. Interior surfaces of cabinet top members 36 inches or more above finished floor.
5. Drawer sides, sub-fronts, backs, and bottoms.
6. Underside of cabinet bottoms between 24 and 42 inches above finished floor.
7. Security and dust panels or drawer stretchers.

E. Concealed Surfaces of Cabinets: Exterior or interior surfaces that are covered or not normally exposed to view, as follows:

1. Toe space, unless otherwise specified.
2. Sleepers, stretchers, and solid sub-tops.
3. Underside of cabinet bottoms less than 24 inches above finished floor.
4. Flat tops of cabinets 80 inches or more above finished floor, except if visible from an upper level.
5. The three non-visible sides of adjustable shelves.
6. The underside of countertops, knee spaces, and drawer aprons.
7. The faces of cabinet ends of adjoining units that butt together.

1.04 SUBMITTALS

A. Product Data: For each type of product, including panel products, cabinet hardware and accessories and finishing materials and processes.

B. Shop Drawings: Show location of each item, dimensioned plans and elevations, large-scale details, attachment devices, and other components.

1. Show details full size.
2. Show locations and sizes of furring, blocking, and hanging strips, including concealed blocking and reinforcement specified in other Sections.
3. Show locations and sizes of cutouts and holes for plumbing fixtures and faucets installed in architectural woodwork.

C. Samples for Initial Selection:

1. Plastic laminates.
2. PVC edge material.

D. Samples for Verification:

1. Plastic laminates, 8 by 10 inches, for each type, color, pattern, and surface finish.

2. Corner pieces as follows:

    a. Cabinet-front frame joints between stiles and rails, as well as exposed end pieces, 18 inches high by 18 inches wide by 6 inches deep.

3. Exposed cabinet hardware and accessories, one unit for each type.
4. Full size cabinet samples, including all mounting hardware and fasteners.

    a. One full size base cabinet with drawer and all hardware.
    b. One full size upper cabinet.

E. Product Certificates: For each type of product, signed by product manufacturer.

F. Qualification Data: For Fabricator.

1.05 QUALITY ASSURANCE

A. Fabricator Qualifications: Shop that employs skilled workers who custom-fabricate products similar to those required for this Project and whose products have a record of successful in-service performance.

B. Installer Qualifications: Fabricator of products, or installer approved by fabricator.

C. Accessibility: Comply with applicable provisions in the 2010 ADA Standards and AAB.

D. Quality Standard: Unless otherwise indicated, comply with AWI's "Architectural Woodwork Quality Standards" for grades of interior architectural woodwork indicated for construction, finishes, installation, and other requirements.

    1. The Contract Documents contain selections chosen from options in the quality standard and additional requirements beyond those of the quality standard. Comply with those selections and requirements in addition to the quality standard.

E. Mockups: Build mockups to verify selections made under sample submittals and to demonstrate aesthetic effects and set quality standards for materials and execution.

    1. Build mockups of typical plastic-laminate-clad cabinets, including the following:

        a. A minimum of two base cabinets, with countertop.
        b. One upper cabinet.

    2. Approved mockups may become part of the completed Work if undisturbed at time of Substantial Completion.

F. Preinstallation Conference: Conduct conference at Project site to comply with requirements in Division 01 Section "Project Management and Coordination."

1.06 DELIVERY, STORAGE, AND HANDLING

A. Do not deliver woodwork until painting and similar operations that could damage woodwork have been completed in installation areas. If woodwork must be stored in other than installation areas, store only in areas where environmental conditions comply with requirements specified in "Project Conditions" Article.

1.07 PROJECT CONDITIONS

A. Environmental Limitations: Do not deliver or install woodwork until building is enclosed, wet work is complete, and HVAC system is operating and maintaining temperature between 60 and
90 deg F and relative humidity between 25 and 55 percent during the remainder of the construction period.

B. Field Measurements: Where woodwork is indicated to fit to other construction, verify dimensions of other construction by field measurements before fabrication, and indicate measurements on Shop Drawings. Coordinate fabrication schedule with construction progress to avoid delaying the Work.

1. Locate concealed framing, blocking, and reinforcements that support woodwork by field measurements before being enclosed, and indicate measurements on Shop Drawings.

1.08 COORDINATION

A. Coordinate sizes and locations of framing, blocking, furring, reinforcements, and other related units of Work specified in other Sections to ensure that interior architectural woodwork can be supported and installed as indicated.

PART 2 - PRODUCTS

2.01 MATERIALS

A. General: Provide materials that comply with requirements of AWI's quality standard for each type of woodwork and quality grade specified, unless otherwise indicated.

B. Wood Products: Comply with the following:

1. Softwood Plywood: DOC PS 1.

C. Thermoset Decorative Panels: Particleboard or medium-density fiberboard finished with thermally fused, melamine-impregnated decorative paper complying with LMA SAT-1.

1. Provide PVC or polyester edge banding complying with LMA EDG-1 on components with exposed or semiexposed edges.

D. High-Pressure Decorative Laminate: NEMA LD 3, grades as indicated or, if not indicated, as required by woodwork quality standard.

1. Manufacturer: Subject to compliance with requirements, provide high-pressure decorative laminates by one of the following:

a. Formica Corporation.
b. Nevamar Decorative Surfaces.
c. Pionite Decorative Surfaces.
d. Wilsonart International.

2.02 Colors: See Finish Schedule on Drawings.

2.03 CABINET HARDWARE AND ACCESSORIES

A. General: Provide cabinet hardware and accessory materials associated with architectural cabinets.

B. Wire Pulls: Back mounted, solid metal, length indicated with 1-13/32-inch projection, 3/8-inch diameter, satin stainless steel finish.

C. Butt Hinges: 2-3/4-inch, 5-knuckle steel hinges made from 0.095-inch- thick metal, and as follows:

1. Semiconcealed Hinges for Overlay Doors: BHMA A156.9, B01521.

D. Door Restraint: Steel cabinet door restraint with nickel-plated finish, with mounting plates for screw fixing at each end.

1. Provide restraint at cabinet doors where cabinet is located adjacent to a wall or where an adjacent counter extends beyond the face of the cabinet.

E. Shelf Rests: BHMA A156.9, B04013; metal, two-pin type with shelf hold-down clip.

F. Catches: Magnetic catches, BHMA A156.9, B03141.

G. Drawer Slides: BHMA A156.9, B05091.

1. Heavy Duty (Grade 1HD-100 and Grade 1HD-200): Side mounted; full-extension type; zinc-plated steel ball-bearing slides.
2. Box Drawer Slides: Grade 1HD-100; for drawers not more than 6 inches high and 24 inches wide.

H. Locks: Furnish locks on all cabinet doors and drawers, keyed alike per room, with one master key.

1. Door Locks: BHMA A156.11, E07121.
2. Drawer Locks: BHMA A156.11, E07041.

I. Counter Support Brackets: Extruded aluminum, 0.25-inch thick, “T”-shaped bracket, welded along 45 degree mitered sides and back, with 5/16-inch holes to accept 1/4-inch screws.

1. Product: Subject to compliance with requirements, provide the following:

a. Rakks; Concealed leg Counter Bracket.

2. Load Capacity: Minimum 450 lbs.
3. Finish: Clear anodized.
4. Sizes:

a. Model EH-1818 for up to 24-inch deep counters: 18” vertical leg, 18” horizontal leg, 2 inches deep.

J. Exposed Hardware Finishes: For exposed hardware, provide finish that complies with BHMA A156.18 for BHMA finish number indicated.

1. Satin Chromium Plated: BHMA 626 for brass or bronze base; BHMA 652 for steel base.

K. For concealed hardware, provide manufacturer's standard finish that complies with product class requirements in BHMA A156.9.

2.04 SOLID SURFACE TRIM AT WINDOW SILLS

A. Thickness: 1/2”.

B. Edge: Eased on all exposed edges.

C. Color: White.

2.05 MISCELLANEOUS MATERIALS

A. Furring, Blocking, Shims, and Hanging Strips: Softwood or hardwood lumber, kiln dried to less than 15 percent moisture content.

B. Anchors: Select material, type, size, and finish required for each substrate for secure anchorage. Provide nonferrous-metal or hot-dip galvanized anchors and inserts on inside face of exterior walls and elsewhere as required for corrosion resistance. Provide toothed-steel or lead expansion sleeves for drilled-in-place anchors.

C. Adhesives, General: Do not use adhesives that contain urea formaldehyde.

D. Adhesive for Bonding Plastic Laminate: Contact cement.

E. VOC Limits for Installation Adhesives and Glues: Use installation adhesives that comply with the following limits for VOC content when calculated according to 40 CFR 59, Subpart D (EPA Method 24):

1. Wood Glues: 30 g/L.
2. Multipurpose Construction Adhesives: 70 g/L.
3. Contact Adhesive: 250 g/L.

2.06 FABRICATION, GENERAL

A. Interior Woodwork Grade: Unless otherwise indicated, provide Custom-grade interior woodwork complying with referenced quality standard.

B. Wood Moisture Content: Comply with requirements of referenced quality standard for wood moisture content in relation to ambient relative humidity during fabrication and in installation areas.

C. Fabricate woodwork to dimensions, profiles, and details indicated. Ease edges to radius indicated for the following:

1. Corners of Cabinets and Edges of Solid-Wood (Lumber) Members 3/4 Inch Thick or Less: 1/16 inch.

D. Complete fabrication, including assembly and hardware application, to maximum extent possible before shipment to Project site. Disassemble components only as necessary for shipment and installation. Where necessary for fitting at site, provide ample allowance for scribing, trimming, and fitting.

1. Trial fit assemblies at fabrication shop that cannot be shipped completely assembled. Install dowels, screws, bolted connectors, and other fastening devices that can be removed after trial fitting. Verify that various parts fit as intended and check measurements of assemblies against field measurements indicated on Shop Drawings before disassembling for shipment.

E. Shop-cut openings to maximum extent possible to receive hardware, appliances, plumbing fixtures, electrical work, and similar items. Locate openings accurately and use templates or roughing-in diagrams to produce accurately sized and shaped openings. Sand edges of cutouts to remove splinters and burrs.

2.07 PLASTIC-LAMINATE-CLAD CABINETS

A. Grade: Custom.

B. Type of Construction: Frameless.

C. Cabinet, Door, and Drawer Front Interface Style: Flush overlay.

D. Cabinet Fabrication: 3/4-inch particleboard.

E. Shelving: Fabricated from particleboard with surfaces indicated, in the following thicknesses:

1. Shelving up to 36- inches wide: 1-inch thick.
2. Shelving 36- inches to 48- inches wide: 1-1/4-inch thick.

F. Laminate Cladding for Exposed Surfaces: High-pressure decorative laminate complying with the following requirements:

1. Horizontal Surfaces Other Than Tops: Grade HGS.
2. Vertical Surfaces: Grade HGS.
3. Edges: PVC edge banding, 0.12 inch (3 mm) thick, in color selected by Architect from manufacturer's full range.
4. Pattern Direction: Vertically for drawer fronts, doors, and fixed panels.

G. Materials for Semiexposed Surfaces:

1. Horizontal Surfaces, Shelves: Grade HGS.
2. Surfaces Other Than Drawer Bodies: High-pressure decorative laminate, Grade VGS.

   a. Edges of Plastic-Laminate Shelves: PVC edge banding, 0.12 inch (3 mm) thick, in color as selected by Architect from manufacturer's full range.
   b. For semi-exposed backs of panels with exposed plastic-laminate surfaces, provide surface of high-pressure decorative laminate, Grade VGS.

3. Drawer Sides and Backs: Thermoset decorative panels.
4. Drawer Bottoms: Thermoset decorative panels.

H. Concealed Backs of Panels with Exposed Plastic Laminate Surfaces: High-pressure

decorative laminate, Grade BKL.

PART 3 - EXECUTION

3.01 PREPARATION

A. Before installation, condition woodwork to average prevailing humidity conditions in installation areas.

B. Before installing architectural woodwork, examine shop-fabricated work for completion and complete work as required, including removal of packing and back priming.

3.02 INSTALLATION

A. Grade: Install woodwork to comply with requirements for the same grade specified in Part 2 for fabrication of type of woodwork involved.

B. Assemble woodwork and complete fabrication at Project site to comply with requirements for fabrication in Part 2, to extent that it was not completed in the shop.

C. Install woodwork level, plumb, true, and straight. Shim as required with concealed shims. Install level and plumb (including tops) to a tolerance of 1/8 inch in 96 inches.

D. Scribe and cut woodwork to fit adjoining work, refinish cut surfaces, and repair damaged finish at cuts.

E. Anchor woodwork to anchors or blocking built in or directly attached to substrates. Secure with countersunk, concealed fasteners and blind nailing as required for complete installation. Use fine finishing nails for exposed fastening, countersunk and filled flush with woodwork and matching final finish if transparent finish is indicated.

F. Cabinets: Install without distortion so doors and drawers fit openings properly and are accurately aligned. Adjust hardware to center doors and drawers in openings and to provide unencumbered operation. Complete installation of hardware and accessory items as indicated.

1. Install cabinets with no more than 1/8 inch in 96-inch sag, bow, or other variation from a straight line.
2. Fasten wall cabinets through back, near top and bottom, at ends and not more than 16 inches o.c. with No. 10 wafer-head screws sized for 1-inch penetration into wood framing, blocking, or hanging strips.

G. Touch up finishing work specified in this Section after installation of woodwork. Fill nail holes with matching filler where exposed.

3.03 ADJUSTING AND CLEANING

A. Repair damaged and defective woodwork, where possible, to eliminate functional and visual defects; where not possible to repair, replace woodwork. Adjust joinery for uniform appearance.

B. Clean, lubricate, and adjust hardware.

C. Clean woodwork on exposed and semi exposed surfaces. Touch up shop-applied finishes to restore damaged or soiled areas.

END OF SECTION 06 40 23

SECTION 06 61 16 - SOLID SURFACING FABRICATIONS

PART 1 - GENERAL

1.01 SUMMARY

A. Section Includes: Provide solid surfacing fabrications including but not limited to following:

1. Work counter.
2. Breakroom counter with sink.
3. Window sills.

B. Related Sections:

1. Provision of finish carpentry and architectural woodwork: Section 06 40 00, Architectural Woodwork.
2. Provision of elastomeric joint sealants: Section 07 92 00, Joint Sealants.
3. Integral lavatory countertop and sinks: Section 123661.16
4. Provision of plumbing and plumbing fixtures: Division 22, Plumbing.

1.02 REFERENCES

A. Abbreviations and Acronyms:

1. MDF: Medium Density Fiberboard.
2. SCAQMD: South Coast Air Quality Management District; www.aqmd.gov.
3. VOC: Volatile Organic Compound.

B. Definitions:

1. Solid Surface: Non-porous, homogeneous material maintaining the same composition throughout the part with a composition of acrylic polymer, aluminum trihydrate filler and pigment.

C. Reference Standards:

1. ANSI/NPA A208.2-09 - Medium Density Fiberboard (MDF) For Interior Applications
2. ASTM C920-14a - Standard Specification for Elastomeric Joint Sealants
3. ASTM D638-10 - Standard Test Method for Tensile Properties of Plastics
4. ASTM D785-08 - Standard Test Method for Rockwell Hardness of Plastics and Electrical Insulating Materials
5. ASTM D790-10 - Standard Test Methods for Flexural Properties of Unreinforced and Reinforced Plastics and Electrical Insulating Materials
6. ASTM D5420-10 - Standard Test Method for Impact Resistance of Flat, Rigid Plastic Specimen by Means of a Striker Impacted by a Falling Weight (Gardner Impact)
7. ASTM E84-14 - Standard Test Method for Surface Burning Characteristics of Building Materials
8. ASTM E228-11 - Standard Test Method for Linear Thermal Expansion of Solid Materials with a Push-Rod Dilatometer
9. ASTM G21-13 - Standard Practice for Determining Resistance of Synthetic Polymeric Materials to Fungi
10. ASTM G22-76(96) - Standard Practice for Determining Resistance of Plastics to Bacteria

11.	ASTM G155-13	- Standard Practice for Operating Xenon Arc Light Apparatus for Exposure of Non-Metallic Materials
12.	CSA B45.5-11/ IAPMO Z124-2011	- Plastic Plumbing Fixtures
13.	NFPA 255-06	- Standard Method of Test of Surface Burning Characteristics of Building Materials
14.	NSF/ANSI 51-07	- Food Equipment Materials
15.	SCAQMD Rule 1168	- Adhesive and Sealant Applications (amended January 2005)
16.	UL 723	- Standard for Test for Surface Burning Characteristics of Building Materials

1.03 ADMINISTRATIVE REQUIREMENTS

A. Preinstallation Meetings: Arrange preinstallation meeting 1 week prior to commencing work with all parties associated with trade as designated in Contract Documents or as requested by Architect. Presided over by Contractor, include Architect who may attend, Subcontractor performing work of this trade, Owner's representative, testing company's representative and consultants of applicable discipline. Review Contract Documents for work included under this trade and determine complete understanding of requirements and responsibilities relative to work included, storage and handling of materials, materials to be used, installation of materials, sequence and quality control, Project staffing, restrictions on areas of work and other matters affecting construction, to permit compliance with intent of work of this Section.

1.04 SUBMITTALS

A. Product Data: Indicate Product description including solid surface sheets, sinks, bowls and illustrating full range of standard colors, fabrication information and compliance with specified performance requirements. Submit Product data with resistance to list of chemicals.

B. Shop Drawings: Submit Shop Drawings for work of this Section in accordance with Section 01 30 00. Indicate plans, sections, dimensions, component sizes, edge details, thermosetting requirements, fabrication details, attachment provisions, sizes of furring, blocking, including concealed blocking and coordination requirements with adjacent work. Show locations and sizes of cutouts and holes for plumbing fixtures, faucets, soap dispensers, waste receptacles and other items installed in solid surface.

C. Coordination Drawings: Submit coordination drawings indicating plumbing and miscellaneous steel work indicating locations of wall rated or non-rated, blocking requirements, locations and recessed wall items and similar items.

D. Samples: Submit samples in accordance with Section 01 30 00. Submit minimum 6" x 6" samples. Cut sample and seam together for representation of inconspicuous seam. Indicate full range of color and pattern variation. Approved samples will be retained as standards for work.

E. Test and Evaluation Reports: Submit flammability test.

1.05 CLOSEOUT SUBMITTALS

A. Operational and Maintenance Data:

1. Submit manufacturer's care and maintenance data, including repair and cleaning instructions. Include in Project closeout documents.
2. Provide a commercial care and maintenance kit and video. Review maintenance procedures and warranty details with Owner upon completion.

1.06 QUALITY ASSURANCE

A. Qualifications:

1. Installers: Provide work of this Section executed by competent installers with minimum 5 years experience in the application of Products, systems and assemblies specified and with approval and training of the Product manufacturers.

1.07 DELIVERY, STORAGE AND HANDLING

A. Delivery and Acceptance Requirements: Deliver no components to Project site until areas are ready for installation.

B. Storage and Handling Requirements:

1. Store components indoors prior to installation.
2. Handle materials to prevent damage to finished surfaces.

1.08 WARRANTY

A. Manufacturer Warranty: Provide manufacturer's standard warranty for material only for period of 10 years against defects and/or deficiencies in accordance with General Conditions of the Contract. Promptly correct any defects or deficiencies which become apparent within warranty period, to satisfaction of Architect and at no expense to Owner.

PART 2 - PRODUCTS

2.01 MANUFACTURERS

A. Manufacturer List: Products of following manufacturers are acceptable subject to conformance to requirements of Drawings, Schedules and Specifications:

1. Corian® by DuPont; www.corian.com
2. Samsung Chemical USA; www.staron.com
3. Wilsonart Contract; www.wilsonartcontract.com

B. Substitution Limitations: This Specification is based on Corian® Products. Comparable Products from manufacturers listed herein will be accepted provided they meet requirements of this Specification.

2.02 MATERIALS

A. Performance/Design Criteria:

	Property	**Requirement (min or max)**	**Test Procedure**
1.	Solid Surface Based Products:		
a.	Tensile Strength	6000 psi min	ASTM D638
b.	Tensile Modulus	1.5×10^6 psi min	ASTM D638
c.	Tensile Elongation	0.4% min.	ASTM D638
d.	Flexural Strength	10000 psi min	ASTM D790
e.	Flexural Modulus	1.2×10^6 psi min	ASTM D790
f.	Hardness	>85-Rockwell "M" scale min.	ASTM D785
g.	Thermal Expansion	2.2×10^{-5} in./in./°F	ASTM E228

h.	Fungi and Bacteria	Does not support microbial growth	ASTM G21 & G22
i.	Microbial Resistance	Highly resistant to mold growth	UL 2824
j.	Ball Impact	No fracture - 1/2 lb. Ball: 6 mm slab - 36" drop 12 mm slab - 144" drop	NEMA LD 3, Method 3.8
k.	Weatherability	ΔE*94<5 in 1,000 hrs	ASTM G155
l.	Flammability		ASTM E84, NFPA 255 & UL 723

		All Colors		
		6 mm	**12 mm**	
m.	Flame Spread	<25	<25	
n.	Smoke Developed	<25	<25	
o.	Class	A	A	NFPA 101®, Life Safety Code

B. Solid Surface Material:

C. Non-porous, homogeneous material maintaining the same composition throughout the part with a composition of acrylic polymer, aluminum trihydrate filler and pigment; not coated, laminated or of composite construction; meeting following criteria:

D. Flammability: Class 1 and A when tested to UL 723.

E. Adhesive for Bonding to Other Products: One component silicone to ASTM C920.

F. Sealant: A standard mildew-resistant, FDA/UL® [and NSF/ANSI 51 compliant in Food Zone area,] recognized silicone color matched sealant or clear silicone sealants.

G. Sink/Bowl Mounting Hardware: Manufacturer's approved bowl clips, brass inserts and fasteners for attachment of undermount sinks/bowls.

2.03 COMPONENTS

A. Window Sills: 1/2" thick solid surfacing material, adhesively joined with inconspicuous seams, edge details as indicated on Drawings. Color selected later by Architect from manufacturer's full color range.

B. Counter Perimeter Frame: Ensure 1/2" [3/4"] thick, moisture resistant [cores for counter tops in wet areas having sinks or lavatories are 3/4" thick exterior grade plywood with waterproof adhesive, Fir or Poplar plywood, veneer core only.] [MDF core conforming to ANSI/NPA A208.2 balanced design, manufactured from recycled materials, meeting ANSI Standards for emissions, of minimum density of 48 lb/cu ft and surface character to match sample approved by Architect. Ensure fire retardant Product contains fire-retardant chemicals injected with raw materials during manufacturing and achieves a maximum flame-spread rating of 25 with a maximum smoke development of 200 when tested to ASTM E84.]

C. Fabrication:

1. Fabricate components in shop to greatest extent practical to sizes and shapes indicated, in accordance with approved Shop Drawings and solid polymer manufacturer requirements. Form joints between components using manufacturer's standard joint adhesive without conspicuous joints. Provide factory cutouts for plumbing fittings and bath accessories as indicated on Drawings.
2. Where indicated, thermoform corners and edges or other objects to shapes and sizes indicated on Drawings, prior to seaming and joining. Cut components larger than finished dimensions and sand edges to remove nicks and scratches. Heat entire component uniformly prior to forming.
3. Ensure no blistering, whitening and cracking of components during forming.
4. Fabricate backsplashes from solid surfacing material with optional radius cove where counter and backsplashes meet as indicated on Drawings. Backsplashes for most colors may be fabricated by traditional means discussed in K-25294 *Backsplashe*s. Colors with metallic/mica particle or veined colors creating directional aesthetics (K-26833 *Directional Aesthetics*) may require the techniques in Technical Bulletin K-28235 *Thermoformed Backsplash*.
5. Fabricate joints between components using manufacturer's standard joint adhesive. Ensure joints are inconspicuous in appearance and without voids. Attach 50 mm (2") wide reinforcing strip of solid polymer material under each joint. Reinforcing strip of solid polymer material is not required when using DuPont™ Joint Adhesive 2.0.
6. Provide holes and cutouts for plumbing and bath accessories as indicated on Drawings.
7. Rout and finish component edges to a smooth, uniform finish. Rout cutouts, then sand edges smooth. Repair or reject defective or inaccurate work.

8. Finish: Ensure surfaces have uniform finish:

    a. Matte, with a 60° gloss rating of 5 - 20.

9. Fabrication Tolerances:

    a. Variation in Component Size: +/-1/8".
    b. Location of Openings: +/-1/8" from indicated location.

PART 3 - EXECUTION

3.01 EXAMINATION

A. Verification of Conditions:

1. Examine substrates and conditions, with fabricator present for compliance with requirements for installation tolerances and other conditions affecting performance of work. Proceed with installation only after unsatisfactory conditions have been corrected.
2. Verify actual site dimensions and location of adjacent materials prior to commencing work.
3. Examine cabinets upon which counter tops are to be installed. Verify cabinets are level to within 1/8" in 10' - 0".
4. Notify Architect in writing of any conditions which would be detrimental to installation.

B. Evaluation and Assessment: Commencement of work implies acceptance of previously completed work.

3.02 INSTALLATION

A. Install components plumb, level, rigid, scribed to adjacent finishes in accordance with reviewed Shop Drawings and Product installation details.

B. Fabricate field joints using manufacturer's recommended adhesive, with joints being inconspicuous in finished work. Exposed joints/seams are not permitted. Keep components and hands clean when making joints. Reinforce field joints as specified herein. Cut and finish component edges with clean, sharp returns.

C. Route radii and contours to template. Anchor securely to base component or other supports. Align adjacent components and form seams to comply with manufacturer's written recommendations using adhesive in color to match work. Carefully dress joints smooth, remove surface scratches and clean entire surface.

D. Install countertops with no more than 1/8" sag, bow or other variation from a straight line.

E. Adhere topmount sinks/bowls to countertops using manufacturer recommended adhesives and color-coordinated silicone sealant. [Secure seam mount bowls and sinks to counter tops using color matched joint adhesive.]

F. Seal between wall and components with joint sealant as specified herein and in Section 07 92 00, as applicable.

G. Provide backsplashes and endsplashes as indicated on Drawings. Adhere to countertops using a standard color-coordinated silicone sealant. Adhere applied sidesplashes to countertops using a standard color-matched silicone sealant. Provide coved backsplashes and sidesplashes at walls and adjacent millwork. Fabricate radius cove at intersection of counters with backsplashes to dimensions shown on reviewed Shop Drawings. Adhere to countertops using manufacturer's standard color-coordinated joint adhesive.

H. Keep components and hands clean during installation. Remove adhesives, sealants and other stains. Ensure components are clean on date of Substantial Completion of the Work.

I. Coordinate connections of plumbing fixtures with [Division 22]. Make plumbing connections to sinks in accordance with [Division 22].

3.03 REPAIR

A. Repair minor imperfections and cracked seams and replace areas of severely damaged surfaces in accordance with manufacturer's "Technical Bulletins".

3.04 SITE QUALITY CONTROL

A. Non-Conforming Work: Replace damaged work which cannot be satisfactorily repaired, restored or cleaned, to satisfaction of Architect at no cost to Owner.

3.05 CLEANING

A. Remove excess adhesive and sealant from visible surfaces.

B. Clean surfaces in accordance with manufacturer's "Care and Maintenance Instructions".

3.06 PROTECTION

A. Provide protective coverings to prevent physical damage or staining following installation for duration of Project.

B. Protect surfaces from damage until date of Substantial Completion of the Work.

END OF SECTION

SECTION 06 8316 - FIBERGLASS REINFORCED PANELING

PART 1 GENERAL

1.01 SECTION INCLUDES

A. Fiberglass reinforced plastic panels.

B. Trim.

1.02 RELATED SECTIONS

A. Section 01 6116 - Volatile Organic Compound (VOC) Content Restrictions.

1.03 REFERENCE STANDARDS

A. ASTM D5319 - Standard Specification for Glass-Fiber Reinforced Polyester Wall and Ceiling Panels; 2017.

B. ASTM E84 - Standard Test Method for Surface Burning Characteristics of Building Materials; 2016.

1.04 SUBMITTALS

A. See Section 01 3000 - Administrative Requirements, for submittal procedures.

B. Product Data: Provide data on specified products, describing physical and performance characteristics; including sizes, patterns and colors available; and installation instructions.

C. Maintenance Materials: Furnish the following for Owner's use in maintenance of project.
   1. See Section 01 6000 - Product Requirements, for additional provisions.

1.05 DELIVERY, STORAGE, AND HANDLING

A. Store panels flat, indoors, on a clean, dry surface. Remove packaging and allow panels to acclimate to room temperature for 48 hours prior to installation.

PART 2 PRODUCTS

2.01 MANUFACTURERS

A. Fiberglass Reinforced Plastic Panels:
   1. Crane Composites, Inc: www.cranecomposites.com.
   2. Marlite: www.marlite.com.
   3. Nudo: www.nudo.com.

2.02 PANEL SYSTEMS

A. Wall Panels:
   1. Panel Size: 4 by 8 feet (1.2 by 2.4 m).
   2. Panel Thickness: 0.10 inch (2.5 mm).
   3. Surface Design: Embossed.
   4. Color: White.
   5. Attachment Method: Adhesive only, sealant joints, no trim.

2.03 MATERIALS

A. Panels: Fiberglass reinforced plastic (FRP), complying with ASTM D5319.
   1. Surface Burning Characteristics: Maximum flame spread index of 25 and smoke developed index of 450; when system tested in accordance with ASTM E84.

B. Trim: Vinyl; color coordinating with panel.

C. Adhesive: Type recommended by panel manufacturer.

D. Sealant: Type recommended by panel manufacturer; white.

PART 3 EXECUTION

3.01 EXAMINATION

A. Verify existing conditions and substrate flatness before starting work.

B. Verify that substrate conditions are ready to receive the work of this section.

3.02 INSTALLATION - WALLS

A. Install panels in accordance with manufacturer's instructions.

B. Cut and drill panels with carbide tipped saw blades, drill bits, or snips.

C. Apply adhesive to the back side of the panel using trowel as recommended by adhesive manufacturer.

D. Apply panels to wall with seams plumb and pattern aligned with adjoining panels.

E. Install panels with manufacturer's recommended gap for panel field and corner joints.

F. Place trim on panel before fastening edges, as required.

G. Fill channels in trim with sealant before attaching to panel.

H. Install trim with adhesive and screws or nails, as required.

I. Seal gaps at floor, ceiling, and between panels with applicable sealant to prevent moisture intrusion.

J. Remove excess sealant after paneling is installed and prior to curing.

END OF SECTION 06 83 16

DIVISION 07

SECTION 07 21 00 - THERMAL INSULATION

PART 1 - GENERAL

1.01 RELATED DOCUMENTS

A. The Contractor, Subcontractors, and/or suppliers providing goods or services referenced in or related to this Section shall also be bound by the Documents identified in Division 01 Section "Summary of Work."

1.02 SUMMARY

A. This Section includes the following:

1. Perimeter wall insulation (supporting backfill).
2. Fiberglass Batt insulation

B. Related Sections include the following:

1. Section 072119 Foamed Inplace Insulation
2. Section 075400 Thermoplastic Membrane Roofing: For roofing insulation

1.03 ACTION SUBMITTALS

A. Product Data: For each type of product indicated.

B. Samples for Verification: Full-size units for each type of exposed insulation indicated.

C. Low-emitting product certification.

1.04 INFORMATIONAL SUBMITTALS

A. Product Test Reports: For each product, for tests performed by a qualified testing agency.

B. Research/Evaluation Reports: For foam-plastic insulation, from ICC-ES.

1.05 QUALITY ASSURANCE

A. Source Limitations: Obtain each type of building insulation through one source from a single manufacturer.

B. Fire-Test-Response Characteristics: Provide insulation and related materials with the fire-test-response characteristics indicated, as determined by testing identical products per test method indicated below by UL or another testing and inspecting agency acceptable to authorities having

jurisdiction. Identify materials with appropriate markings of applicable testing and inspecting agency.

1. Surface-Burning Characteristics: ASTM E 84.
2. Fire-Resistance Ratings: ASTM E 119.
3. Combustion Characteristics: ASTM E 136.

1.06 DELIVERY, STORAGE, AND HANDLING

A. Protect insulation materials from physical damage and from deterioration by moisture, soiling, and other sources. Store inside and in a dry location. Comply with manufacturer's written instructions for handling, storing, and protecting during installation.

B. Protect plastic insulation as follows:

1. Do not expose to sunlight, except to extent necessary for period of installation and concealment.
2. Protect against ignition at all times. Do not deliver plastic insulating materials to Project site before installation time.
3. Complete installation and concealment of plastic materials as rapidly as possible in each area of construction.

C. Indoor Air Quality Requirements: The following practices shall be implemented in accordance with Division 01 Section “Indoor Air Quality Requirements.”

1. Insulations are to be stored per manufacturer’s recommendations for allowable temperature and humidity range. Insulations shall not be allowed to become damp.
2. Where feasible, fiberglass, mineral wool, and other fibrous insulations shall be stored separately from materials which have high short-term emissions. Materials with high short-term emissions include, but are not limited to: adhesives, sealants and glazing compounds (specifically those with petrochemical vehicles or carriers); paint, wood preservatives, and finishes; control and/or expansion joint fillers; hard finishes requiring adhesive installation; gypsum board (with associated finish processes and products); and composite or engineered wood products with formaldehyde binders.
3. Where feasible, exposed fiberglass or mineral wool insulations shall not be stored in occupied spaces, near HVAC diffusers (supply or return), or near fresh air intakes.

PART 2 - PRODUCTS

2.01 FOAM-PLASTIC BOARD INSULATION

A. Extruded-Polystyrene Board Insulation (Perimeter Wall): ASTM C 578, of type and density indicated below, with maximum flame-spread and smoke-developed indexes of 75 and 450, respectively:

1. Products: Subject to compliance with requirements, provide one of the following:

a. Dow Chemical Company; Styrofoam Brand Square Edge.
b. GreenGuard; XPS Type IV.
c. Owens Corning; Foamular 250.

2. Type IV, 1.60 lb/cu. ft.
3. Thermal Resistance: 5 year aged R-values of 5.4 and 5.0 minimum, at 40 deg. F and 75 deg. F respectively.
4. Compressive Strength: ASTM D1621, 25 psi.
5. Water absorption: ASTM C272, 0.3% by volume maximum.
6. Flame Spread Index (FSI): Class A - 0 to 25, when tested in accordance with ASTM E84.
7. Smoke Developed Index (SDI): 450 or less, when tested in accordance with ASTM E84.

2.02 GLASS-FIBER BLANKET INSULATION

A. Glass-Fiber Blanket Insulation, Formaldehyde-free, unfaced: ASTM C665, Type I; passing ASTM E136 for combustion characteristics.

1. Manufacturers: Subject to compliance with roof application requirements, provide products by one of the following:

   a. Certainteed Corp
   b. Johns Manville Corp
   c. Knauf Fiber Glass
   d. Owens Corning
   e. Thermafiber, Inc
   f. Approved Equal

2. Flame-Spread Index: Not more than 25 when tested in accordance with ASTM E84.
3. Smoke-Developed Index: Not more than 50 when tested in accordance with ASTM E84.
4. Where included as part of a fire rated assembly, products must comply with applicable fire rated assembly listing of Underwriters Laboratory (UL) or other approved testing agency.
5. Labeling: Provide identification of mark indicating R-value of each piece of insulation 12 inches (305 mm) and wider in width.
6. Location: Floor assemblies, interior wall voids

B. Formaldehyde-Free sound attenuating fiberglass insulation:

1. Manufacturers: Subject to compliance with roof application requirements, provide products by one of the following:

   a. Certainteed Corp
   b. Johns Manville Corp
   c. Knauf Fiber Glass
   d. Owens Corning
   e. Thermafiber, Inc
   f. Approved Equal

2. Blanket/batt: White-colored, translucent, Formaldehyde-free, light weight, .5pcf fiberglass blanket, conforming to standard/Test Method ASTME84, UL273, CAN/ULZ S102, M88.
3. Flame spread: not greater than 25, maximum smoke Developed Index-50.
4. Where included as part of a fire rated assembly, products must comply with applicable fire rated assembly listing of Underwriters Laboratory (UL) or other approved testing agency.
5. Location: Floor assemblies, interior wall voids

PART 3 - EXECUTION

3.01 EXAMINATION

A. Examine substrates and conditions, with Installer present, for compliance with requirements of Sections in which substrates and related work are specified and for other conditions affecting performance.

1. Proceed with installation only after unsatisfactory conditions have been corrected. Commencement of work indicates acceptance of substrates.

3.02 PREPARATION

A. Clean substrates of substances harmful to insulation or vapor retarders, including removing projections capable of puncturing vapor retarders or of interfering with insulation attachment.

3.03 INSTALLATION, GENERAL

A. Comply with insulation manufacturer's written instructions applicable to products and application indicated.

B. Install insulation that is undamaged, dry, and unsoiled and that has not been left exposed at any time to ice, rain, and snow.

C. Extend insulation in thickness indicated to envelop entire area to be insulated. Cut and fit tightly around obstructions and fill voids with insulation. Remove projections that interfere with placement.

D. For preformed insulating units, provide sizes to fit applications indicated and selected from manufacturer's standard thicknesses, widths, and lengths. Apply single layer of insulation units to produce thickness indicated unless multiple layers are otherwise shown or required to make up total thickness.

3.04 INSTALLATION OF PERIMETER INSULATION

A. On vertical surfaces, set insulation units in adhesive applied according to manufacturer's written instructions. Use adhesive recommended by insulation manufacturer.

1. If not otherwise indicated, extend insulation a minimum of 48 inches below exterior grade line.

B. On horizontal surfaces, loosely lay insulation units according to manufacturer's written instructions. Stagger end joints and tightly abut insulation units.

C. Protect below-grade insulation on vertical surfaces from damage during backfilling by applying protection course with joints butted. Set in adhesive according to insulation manufacturer's written instructions.

D. Protect top surface of horizontal insulation from damage during concrete work by applying protection course with joints butted.

3.05 INSTALLATION OF INSULATION IN FRAMED CONSTRUCTION

A. Blanket Insulation: Install in cavities formed by framing members according to the following requirements:

1. Use insulation widths and lengths that fill the cavities formed by framing members. If more than one length is required to fill the cavities, provide lengths that will produce a snug fit between ends.
2. Place insulation in cavities formed by framing members to produce a friction fit between edges of insulation and adjoining framing members.
3. Maintain 3-inch (76-mm) clearance of insulation around recessed lighting fixtures not rated for or protected from contact with insulation.
4. For wood-framed construction, install blankets according to ASTM C1320 and as follows:

a. With faced blankets having stapling flanges, lap blanket flange over flange of adjacent blanket to maintain continuity of vapor retarder once finish material is installed over it.

B. Miscellaneous Voids: Install insulation in miscellaneous voids and cavity spaces where required to prevent gaps in insulation using the following materials:

1. Glass-Fiber Insulation: Compact to approximately 40 percent of normal maximum volume equaling a density of approximately 2.5 lb/cu. ft. (40 kg/cu. m).
2. Spray Polyurethane Insulation: Apply according to manufacturer's written instructions.

3.06 INSTALLATION OF GENERAL BUILDING INSULATION

A. Apply insulation units to substrates by method indicated, complying with manufacturer's written instructions. If no specific method is indicated, bond units to substrate with adhesive or use mechanical anchorage to provide permanent placement and support of units.

B. Install unfaced, slag-wool-fiber/rock-wool-fiber blanket insulation in penetrations in all non-fire rated horizontal floor/ceiling assemblies, including edge of slab conditions indicated. Fill annular space of penetration to resist the free passage of flame and the products of combustion.

3.07 PROTECTION

A. Protect installed insulation from damage due to harmful weather exposures, physical abuse, and other causes. Provide temporary coverings or enclosures where insulation is subject to abuse and cannot be concealed and protected by permanent construction immediately after installation.

END OF SECTION 07 21 00

SECTION 07 21 19 - FOAMED-IN-PLACE INSULATION

PART 1 GENERAL

1.01 SECTION INCLUDES

A. Foamed-in-place insulation for use at perimeters of door and window frames and locations shown in the drawings.

1.02 REFERENCE STANDARDS

A. ASTM C518 - Standard Test Method for Steady-State Thermal Transmission Properties by Means of the Heat Flow Meter Apparatus; 2015.

B. ASTM E84 - Standard Test Method for Surface Burning Characteristics of Building Materials; 2016.

C. ASTM E283 - Standard Test Method for Determining the Rate of Air Leakage Through Exterior Windows, Curtain Walls, and Doors Under Specified Pressure Differences Across the Specimen; 2004 (Reapproved 2012).

D. ASTM E2178 - Standard Test Method for Air Permeance of Building Materials; 2013.

1.03 ADMINISTRATIVE REQUIREMENTS

A. Preinstallation Meeting: Convene one week prior to commencing work of this section.

1.04 SUBMITTALS

A. See Section 01 3000 - Administrative Requirements, for submittal procedures.

B. Product Data: Provide product description, insulation properties, overcoat properties, and preparation requirements.

1.05 QUALITY ASSURANCE

A. Manufacturer Qualifications: Company specializing in manufacturing products of the type specified in this section, with not less than three years of documented experience.

B. Applicator Qualifications: Company specializing in performing work of the type specified, with minimum three years documented experience.

1.06 FIELD CONDITIONS

A. Do not apply foam when temperature is below that specified by the manufacturer for ambient air and substrate.

B. Do not apply foam when temperature is within 5 degrees F (2.78 degrees C) of dew point.

PART 2 PRODUCTS

2.01 MATERIALS

A. Foamed-In-Place Insulation: Low-density, flexible, open celled, water vapor permeable polyurethane foam; foamed on-site, using blowing agent of water.
   1. Thermal Resistance: R-value (RSI-value) of 3.0 (0.53), minimum, per 1 inch (25.4 mm) thickness at 75 degrees F (24 degrees C) mean temperature when tested in accordance with ASTM C518.
   2. Air Permeance: 0.004 cfm/sq ft (0.2 L/second sq meter), maximum, when tested at intended thickness in accordance with ASTM E2178 or ASTM E283 at 1.5 psf (75 Pa).
   3. Surface Burning Characteristics: Flame spread/Smoke developed index of 25/450, maximum, when tested in accordance with ASTM E84.
   4. Manufacturers:
      a. Icynene Inc; Icynene Classic Plus: www.icynene.com/#sle.

2.02 ACCESSORIES

A. Primer: As required by insulation manufacturer.

PART 3 EXECUTION

3.01 EXAMINATION

A. Verify work within construction spaces or crevices is complete prior to insulation application.

B. Verify that surfaces are clean, dry, and free of matter that may inhibit insulation or overcoat adhesion.

3.02 PREPARATION

A. Mask and protect adjacent surfaces from over spray or dusting.

B. Apply primer in accordance with manufacturer's instructions.

3.03 APPLICATION

A. Apply insulation in accordance with manufacturer's instructions.

B. Apply insulation by spray method, to a uniform monolithic density without voids.

C. Apply to a minimum cured thickness of 4.5 inch.

3.04 PROTECTION

A. Do not permit subsequent construction work to disturb applied insulation.

END OF SECTION

SECTION 07 27 13 - FIRE RESISTANT, SELF-ADHERING MEMBRANE AIR & VAPOR BARRIERS

PART 1 GENERAL

1.1 SECTION INCLUDES

A. A self-adhered membrane and accessory products of fire-resistant composition for use as an air and vapor barrier in exterior walls.

B. Materials and installation to bridge and seal the following air leakage pathways and gaps:
   1. Connections of the walls to the roof air barrier
   2. Connections of the walls to the foundations
   3. Seismic and expansion joints
   4. Openings and penetrations of window frames, door frames, store front, curtain wall
   5. Barrier pre-cast concrete and other envelope systems
   6. Door frames Piping, conduit, duct and similar penetrations
   7. Masonry ties, screws, bolts and similar penetrations
   8. All other air leakage pathways through the walls

1.2 RELATED SECTIONS

A. Section 03 30 00 - Cast-In-Place Concrete
B. Section 042613 – Masonry Veneer
C. Section 042723 – Cavity Wall Unit Masonry
D. Section 07 21 00 - Thermal Insulation
E. Section 07 62 00 - Sheet Metal Flashing and Trim: Metal through-wall flashings
F. Section 07 90 00 - Joint Protection: Joint sealant materials and installation.
G. Section 08 12 00 - Metal Door Frames
H. Section 08 43 00 – Storefronts
I. Section 09 29 00 - Gypsum Sheathing: Gypsum sheathing over metal studs.

1.3 REFERENCES

A. American Association of Textile Chemists and Colorists (AATCC) Test Method 127. “Water Resistance – Hydrostatic Pressure Test”

B. American Society of Heating, Refrigerating and Air-Conditioning Engineers (ASHRAE) Standard 90.1-2010 “Energy Standard for Buildings Except Low-Rise Residential Buildings”

C. ASTM C 920 Standard Specification for Elastomeric Joint Sealants

D. ASTM C 1305 Standard Test Method for Crack Bridging Ability of Liquid-Applied Waterproofing Membrane

E. ASTM D 882 Standard Test Methods for Vulcanized Rubber and Thermoplastic Elastomers – Tension

F. ASTM D 1876 Standard Test Method for Peel Resistance of Adhesive

G. ASTM D 1970 Standard Specification for Self-Adhering Polymer Modifed Bituminous Sheet Materials Used as Steep slope roofing Underlayment for Ice Dam Protection

H. ASTM D 4073 Standard Test Method for Tensile-Tear Strength of Bituminous Roofing Membranes

I. ASTM D 4541 Standard Test Method for Pull-Off Strength of Coatings Using Portable Adhesion Testers

J. ASTM E 84 Standard Test Method for Surface Burning Characteristics of Building Materials

K. ASTM E 96 Standard Test Methods for Water Vapor Transmission of Materials.

L. ASTM E 154 Standard Test Methods for Water Vapor Retarders used in Contact with Earth under Concrete Slabs, on Walls or as Ground Cover

M. ASTM E 783 Standard Test Method for Field Measurement of Air Leakage Through Installed Exterior Windows and Doors

N. ASTM E 1105 Standard Test Method for Field Determination of Water Penetration of Installed Exterior Windows, Skylights, Doors, and Curtain Walls by Uniform or Cyclic Static Air Pressure Difference.

O. ASTM E 1354 Standard Test Method for Heat and Visible Smoke Release Rates for Materials and Products Using an Oxygen Consumption Calorimeter

P. ASTM E 2178 Standard Test Method for Air Permeance of Building Materials

Q. ASTM E 2357 Standard Test Method for Determining Air Leakage of Air Barrier Assemblies

R. National Fire Protection Association (NFPA) 285 Standard Fire Test Method for Evaluation of Fire Propagation Characteristics of Exterior Non-Load-Bearing Wall Assemblies Containing Combustible Components

1.4 PERFORMANCE REQUIREMENTS

A. Installed product and accessories constitute a continuous air barrier, as described in ASHRAE Standard 90.1-2010 Section 5.4.3.1

B. Installed product and accessories shall perform as a liquid water drainage plane flashed to discharge to the exterior any incidental condensation or water

penetration.

C. Installed product and accessories shall exhibit an air leakage rate, infiltration and exfiltration modes, measured after pressure cycling, not to exceed 0.2 L/s*m^2 at 75 Pa (0.040 CFM/ft^2 at 1.57 PSF) according to ASTM E 2357.

D. Installed product and accessories shall perform as a vapor barrier, installed on the predominantly warm side of the insulation.

E. For Type I, II, III and IV construction: Installed product and accessories shall be evaluated to NFPA 285 in wall assemblies of Project.

F. Product shall consist of nominal 0.040 inch (40 mils) thickness composite membrane consisting of an aluminum-faced cross-laminated high density polyethylene sheet laminated with a styrene-butadiene-styrene modified asphalt adhesive.

G. Product shall meet the following requirements:

REQUIREMENT	RESULT	TEST METHOD
Air Permeance	Not more than 0.02 L/s*m^2 at 75 Pa (0.004 CFM/ft^2 at 1.57 PSF)	ASTM E-2178
Tensile Strength	Not less than 40 lb_f per inch	ASTM D-882
Puncture Resistance	Not less than 50 lb_f	ASTM E 154
Tear Initiation and Propagation	Not less than 30 lb_f, machine direction and cross direction	ASTM D 4073
Low Temperature Flexibility	No cracking at minus 20 degrees F, 1 inch mandrel	ASTM D 1970
Fastener Sealability	No water leaking through fastener penetration after 24 h.	ASTM D 1970
Water Resistance	Membrane specimen including a lap shall resist a 55 cm (22 inch) column of water for 5 hours, no leaking or wet through.	AATCC-127, modified static head generated with 5"diameter PVC pipe sealed to specimen
Pull Adhesion	Not less than 16 lb_f per square inch (or report value at substrate failure) on glass-faced gypsum sheathing and concrete masonry unit, substrate prepared with contact adhesive	ASTM D 4541, modified 4 inch puck
Lap Adhesion	Not less than 5 lb_f per inch of width	ASTM D 1876
Water Vapor Permeance	Not more than 0.1 Perm	ASTM E-96, Method B
Surface Burning Characteristics.	Flame Spread Index: Not more than 25 Smoke Generation Index: Not more than 450	ASTM E 84, sample tested at full coverage, cement board substrate, including surface preparation

Measurement of Heat Release Rate by Cone Calorimeter	Effective Heat of Combustion of 0 MJ/kg or less Peak heat release rate of 6.67 kW/m^2 or less Total heat release rate of 1.1 MJ/m^2 or less	ASTM E 1354, membrane applied to glass-faced gypsum sheathing, including surface preparation. 50 kW/m^2 heat flux.

1.5 SUBMITTALS

A. Provide submittals in accordance with Section 01 33 00.

B. At bid submission, provide evidence to the Architect of installer qualification by the air & vapor barrier manufacturer.

C. Shop drawings showing locations and extent of air & vapor barrier and details of all typical conditions.

D. Manufacturer’s list and description of wall assemblies, incorporating product, tested per NFPA 285

E. Manufacturer's technical data sheets and material safety data sheets for product and accessories.

F. Manufacturer's installation instructions.

G. Certification of compatibility by manufacturer, listing all materials on the project with which the product and accessories may come into contact.

H. Sample of product and transition membrane, minimum 2 inch by 3 inch size.

1.6 QUALITY ASSURANCE

A. Installer Qualifications: Shall be experienced in applying the same or similar materials and shall be specifically approved in writing by Manufacturer.

B. Single-Source Responsibility: Obtain product and accessories from single manufacturer.

C. Product and Accessories shall comply with all state and local regulations controlling use of volatile organic compounds (VOCs).

D. Pre-Installation Meeting: Convene one week prior to commencing Work of this Section.

F. Cooperate and coordinate with the Owner's inspection and testing agency. Do not cover any installed Product unless it has been inspected, tested and approved.

1.7 DELIVERY, STORAGE AND HANDLING

A. Deliver materials to Project site in original packages with seals unbroken, labeled with manufacturer's name, product, lot number and directions for storage.

B. Store materials in their original undamaged packages in a clean, dry, protected location and within temperature range required by Manufacturer.

C. Avoid spillage. Immediately notify Owner and Architect if spillage occurs and start clean up procedures. Clean spills and leave area as it was prior to spill.

1.8 WASTE MANAGEMENT AND DISPOSAL

A. Separate and recycle waste materials.
B.

B. Place materials defined as hazardous or toxic waste in designated containers.

C. Ensure emptied containers are stored safely for disposal away from children.

1.9 PROJECT CONDITIONS

A. Do not apply product or accessories during rain or accumulating snowfall.

B. Apply product and accessories within approved ambient and substrate temperature range stated in manufacturer’s literature.

C. Do not apply product or accessories over incompatible materials.

D. Observe safety and environmental measures indicated in manufacturer’s MSDS, and mandated by federal, state and local regulations.

1.10 WARRANTIES: Provide the manufacturer’s minimum five year material warranty.

PART 2 PRODUCTS

2.1 PRODUCTS AND MANUFACTURERS:

A. Basis of Design: Fire Resist™ 705 FR-A by Carlisle Coatings & Waterproofing, Incorporated (CCW). 900 Hensley Lane, Wylie, TX 75098. Phone 1-800-527-7092. Website http://www.carlisleccw.com

B. Other equivalent products and manufacturers as approved by Design Professional

2.2 ACCESSORIES: Provide from same manufacturer as air barrier membrane.

A. Detail Flashing: Similar composition to air barrier membrane. Factory slit to convenient sizes.
   1. CCW: Fire Resist 705 FR-A
   2. Others: As specified by air barrier membrane manufacturer

B. Contact Adhesive: Liquid or spray-applied for preparing surfaces accepting air barrier membrane
   1. CCW: CCW-702 Solvent-Based , CCW-702 LV VOC Compliant, Solvent-Based, CCW-702 WB Water-Based or CAV-GRIP™ Aerosol Spray
   2. Others: As specified by air barrier membrane manufacturer

C. Detail Mastic: 1-part material for sealing details. Installation over air barrier membrane.
   1. CCW: Universal Single Ply Sealant
   2. Others: As specified by air barrier membrane manufacturer

D. Transition Membrane: Tough, elastomeric sheet capable of bridging a 1" gap. Minimum 60 mils thickness
   1. CCW: SURE-SEAL Pressure-Sensitive Elastoform.
   2. Others: As specified by air barrier membrane manufacturer

E. Fill Compound: 2-part chemical cure sealant, compatible with adhesive side of air barrier membrane.
   1. CCW: CCW-703 V Modified polyurethane, 2-part or CCW-201 Polyurethane, 2-part
   2. Others: As specified by air barrier membrane manufacturer

2.3 RELATED MATERIALS

A. Polyurethane Sealant: used for sealing membrane surface defects, penetrations and terminations:
   1. Approved by CCW: Sonneborn NP-1, Dymonic FC, S-M 7100 Permathane Pro-Installer by Schnee-Morehead Div, ITW or Xtra-Bond 7500 TX by Premiere Industrial Supply
   2. Others: As specified by air barrier membrane manufacturer

B. Silicone Sealant: used for sealing fenestration to air barrier membrane, surface defects and penetrations
   1. Approved by CCW: Dow-Corning 758, 790, 791 or 795 or Pecora AVB Silicone, 890, 891 or 895 or GE Silpruf or Silpruf LM
   2. Others: As specified by air barrier membrane manufacturer

C. Polyurethane Foam Sealant: used for sealing gaps around fenestration and other penetrations
   1. Approved by CCW: Great Stuff by Dow Chemical Company, FireBlock Gun Foam by TVM Building Products or Fireblock Foam Sealant by FOMO
   2. Others: As specified by air barrier membrane manufacturer

D. Insulation Adhesive: used for bonding foam board insulation to air barrier membrane
   1. Approved by CCW for polyisocyanurate insulation: LM 800 XL or CAV-

GRIP Spray Contact Adhesive by Carlisle Coatings & Waterproofing Incorporated

2. Approved by CCW for extruded polystyrene insulation: CAV-GRIP Spray Contact Adhesive by CCW, QB-300 Multi-Pupose Construction Adhesive by OSI or PL-300 VOC Foamboard Adhesive by Loctite
3. Others: As specified by air barrier membrane manufacturer

PART 3 EXECUTION

3.1 EXAMINATION

A. Examine substrates, areas, and conditions affecting installation of the air & vapor barrier and accessory products for compliance with requirements. Verify that surfaces and conditions are suitable prior to commencing Work of this section. Do not proceed with installation until unsatisfactory conditions have been corrected.

B. Verify that wall assemblies are dried in, such that water intrusion will not occur from above, behind or around the air barrier installation.

C. Concrete shall be cured for a minimum of seven days. It shall be smooth, with sharp protrusions such as form joints ground flush. Honeycomb and holes/cracks exceeding ¼ inch across shall be filled with grout or mortar.

D. Surfaces shall be sound, dry and free of oil, grease, dirt, excess mortar or other contaminants.

E. Surfaces shall be supported and flush at joints without large voids or sharp protrusions.

F. Mortar joints shall be struck flush and shall be free of voids exceeding ¼ inch across. Mortar droppings shall be removed from brick ties and all other surfaces accepting air barrier.

G. Sheathing boards shall be flush at joints, with gaps between boards according to building code and sheathing manufacturer's requirements. Sheathing boards shall also be securely fastened to the structure with proper fastener type, technique and spacing according to building code and sheathing manufacturer's requirements. Sheathing boards shall be repaired or replaced if inspection reveals moisture damage, mechanical damage or if sheathing boards have exceeded the exposure duration or exposure conditions as required by the sheathing manufacturer.

H. Plywood, OSB, lumber or pressure-treated wood moisture content, measured with a wood moisture meter in the core of the substrate, shall be below 20%.

I. Inform Architect [Consultant] [Owner] in writing of
1. Cracks in concrete and masonry.
2. Gaps or obstructions such as steel beams, angles, plates and projections which cannot be spanned or covered by Product or

Accessories.

3. Anticipated problems applying Product and Accessories over substrate.

3.2 SURFACE PREPARATION

A. Fill cracks, gaps and joints exceeding ¼ inch width with fill compound or polyurethane sealant.

B. Fill rough gaps around pipe, conduit and similar penetrations with mortar, non-shrink grout, fill compound or polyurethane foam sealant shaved flush.

C. Apply a ¾ inch cant of fill compound at the intersection of the base of the wall and the footing.

3.3 INSTALLATION

A. Apply product over opaque wall surfaces as indicated in Project drawings.

B. Allow sealants used during surface preparation to cure fully before applying product.

C. Apply contact adhesive to all surfaces accepting product, according to manufacturer's instructions.

D. Apply product to prepared surfaces according to manufacturer's instructions and drawings.

E. Sequence installation to provide shingled laps. Lap neighboring sheets 2 inches minimum.

F. Install detail flashing or transition membrane according to manufacturer's drawings and instructions at expansion joints, seismic joints, mechanical/electrical penetrations and similar conditions.

G. Install detail mastic, polyurethane sealant or silicone sealant covering non- water shedding laps, penetrations and similar surface defects.

3.4 SCHEDULE

A. Wall substrates and roof or temporary roof shall be in place, effectively enclosing interior space before proceeding with air barrier installation

B. Seal penetrations made through installed product according to manufacturer's instructions and drawings.

C. Seal fenestration to product with detail membrane, transition membrane, polyurethane sealant, silicone sealant or polyurethane foam sealant according to Project drawings

D. Through-wall flashing may be installed before or after product. Seal termination of metal through-wall flashing to product with 6 inch width detail flashing.

E. Cladding shall be installed after product.

F. Rigid or semi-rigid insulation installed over product shall be attached with insulation adhesive and mechanical fastening according to insulation manufacturer and air barrier manufacturer's instructions.

G. Sequence Work to enable air barrier continuity at wall-to-foundation, shelf angle, wall-to-roof, fenestration, different wall assemblies and other conditions providing challenges to air barrier continuity.

3.5 REPAIR AND PROTECTION

A. Protect from damage during application and remainder of construction period.

B. Inspect before covering. Repair or replace damaged material according to Manufacturer's instructions and drawings.

C. Product and accessories are not designed for permanent exposure. Cover with insulation or exterior cladding as soon as schedule allows.

D. Outdoor exposure of installed product and accessories shall not exceed 180 days.

END OF SECTION 07 27 13

SECTION 07 41 00 - PREFORMED METAL WALL PANELS

PART 1 - GENERAL

1.1 DESCRIPTION OF WORK

A. This section covers the pre-finished, pre-fabricated Architectural metal wall panel system. All metal trim, accessories, fasteners, insulation and sealants indicated on the drawings as part of this section.
B. Drawings and general provisions of the Contract, including general and Supplementary Conditions and Division 01 Specifications, apply to this section.

1.2 SUMMARY

A. Section Includes
    1. Factory formed metal wall panels
B. Related work specified elsewhere (Note: select from the below or add appropriate sections)
    1. Metal Roof Deck: Division 5 - Metal Deck Sections
    2. Wood Framing and Decking: Division 6 Roof Carpentry Section
    3. Flashing and Trim: Division 7- Flashing and Sheet Metal
    4. Coping and Gravel Stops: Division 7 Roof Specialties and Accessories
    5. Sealants: Division 7 Joint Sealers Sections

1.3 Definitions

A. Metal Wall Panel Assembly: Metal wall panels, attachment system components, miscellaneous metal framing, thermal, and accessories necessary for a complete weathertight system.

1.4 QUALITY ASSURANCE

A. Petersen Aluminum Corp, Acworth, GA, 800-272-4482Petersen Aluminum Corp, Phoenix, AZ, 833-750-1935 products establish a minimum of quality required.
B. Manufacturer and erector shall demonstrate experience of a minimum of five (5) years in this type of project.
C. Sheet Metal Industry Standard: Comply with Sheet Metal and Air Conditioning Contractors National Association (SMACNA) *Architectural Sheet Metal Manual.*
D. Panels shall be factory-produced only. No portable, installer-owned or installer-rented machines will be permitted.

1.5 SUBSTITUTIONS

A. The material, products and equipment specified in this section establish a standard for required function, dimension, appearance and quality to be met by any proposed substitution.

1.6 SYSTEM DESCRIPTION

A. Material to comply with:
    1. ASTM B209 Standard Specification for Aluminum and Aluminum-Alloy Sheet and Plate

1.7 WALL PANEL SYSTEM PERFORMANCE TESTING

A. General Performance: Metal wall panels shall comply with performance requirements without failure due to defective manufacture, fabrication, installation or other defects in construction.
B. Panels to meet:
    1. Metal Wall or Metal Soffit System shall be designed to meet applicable Local Building Code and the Soffit System shall have been tested by the Manufacturer per ASTM E-330 and have the applicable Load Tables published from this Air Bag testing for negative loads.

1.8 WARRANTIES

A. Finish warranty: Manufacturer's standard form in which manufacturer agrees to repair finish or replace metal wall panels that show evidence of deterioration of factory-applied finish within specified warranty period.
    1. Exposed Panels Finish - deterioration includes the following:
        a. Color fading more than 5 hunter units when tested according to ASTM D 2244
        b. Chalking in excess of a No. 8 rating when tested according to ASTM D 4214
        c. Cracking, checking, peeling or failure of a paint to adhere to a bare metal.
    2. Warranty Period: 20 Years from the date of substantial completion
B. Applicator shall furnish written warranty for a two (2) year period from date of substantial completion of building covering repairs required to maintain roof and flashings in watertight condition

1.9 SUBMITTALS

A. Furnish detailed drawings showing profile and gauge of exterior sheets, location and type of fasteners, location, gauges, shape and method of attachment of all trim locations and types of sealants, and any other details as may be required for a weather-tight installation.
B. Provide finish samples of all colors specified.
C. Shop drawings: Show fabrication and installation layouts of metal wall panels or metal soffit panels, details of edge conditions, panel profiles, corners, anchorages, trim, flashings, closures and accessories, and special details. Distinguish between factory and field-assembled work
D. Coordination Drawings: Plans, drawn to scale, on which the following are shown and coordinated with each other, based on input from installer of the items involved.

1.10 DELIVERY, STORAGE AND HANDLING

A. Ordering: Comply with manufacturer's ordering instruction and lead time requirements to avoid construction delays.
B. Deliver components, sheets, metal wall panels and other manufactured items so as not to be damaged or deformed. Package metal wall panels for protection during transportation and handling.
C. Unload, store and erect metal wall panels in a manner to prevent bending, warping, twisting and surface damage.
D. Stack metal wall panels on platforms or pallets, covered with suitable weathertight and ventilated covering. Store metal wall panels to ensure dryness. Do not store metal wall panels in contact with other materials that might cause staining, denting or other surface damage.
E. Protect strippable protective coating on any metal coated product from exposure to sunlight and high humidity, except to the extent necessary for material installation.

1.11 PROJECT CONDITIONS

A. Weather Limitations: proceed with installation only when existing and forecasted weather conditions permit metal wall panel work to be performed.

B. Field Measurements: Verify actual dimensions of construction contiguous with metal roof panels by field measurements before fabrication.

PART 2 - PRODUCTS

2.1 PANEL DESIGN

A. General: Provide factory-formed metal wall panels designed for wall, soffit and fascia applications where a flush or flat appearance is desired. A round interlock leg and concealed fastening system act to improve the flush appearance while providing additional strength.
B. Wall panels shall be Flush Wall 12" widths with 1" height.
C. Panels to be produced Smooth - Factory Standard. Specifier note: Factory standard is smooth unless specified. Specifier Note: Depending on producing factory, panels may be specified with venting strips or perforated, aluminum panels only, for soffit applications. Check with local factory for capabilities.
D. Forming: Use continuous end rolling method. No end laps on panels. No portable rollforming machines will be permitted on this project, no installer-owned or installer-rented machines will be permitted. It is the intent of the Architect to provide Factory-Manufactured panel systems only for this project.

2.2 ACCEPTABLE MANUFACTURERS

A. This project is detailed around the metal wall product of Petersen Aluminum Corp, Acworth, GA, 800-272-4482Petersen Aluminum Corp, Phoenix, AZ, 833-750-1935 Flush Wall

2.3 MATERIALS AND FINISHES

A. Preformed metal panels shall be fabricated of .040 Aluminum and shall be Herr-Voss corrective leveled for flat appearance.
B. Color shall be Slate Gray
C. Finish shall be Kynar 500 or Hylar 5000 Fluorocarbon coating with a top side film thickness of 0.70 to 0.90 mil over a 0.25 to 0.3 mil prime coat to provide a total dry film thickness of 0.95 to 1.25 mil, to meet AAMA 621. Bottom side shall be coated with a primer with a dry film thickness of 0.25 mil. Finish shall conform to all tests for adhesions, flexibility and longevity as specified by Kynar 500 or Hylar 5000 finish supplier.
D. If Strippable coating to be applied on the pre-finished panels to the top side to protect the finish during fabrication, shipping and handling, film shall be removed before installation.
E. Trim: Trim shall be fabricated of the same material and finish to match the profile, and will be press broken in lengths of 10 to 12 feet. Trim shall be formed only by the manufacturer of their approved dealer. Trim to be erected in overlapped condition. Use lap strips only as indicated on drawings. Miter conditions shall be factory welded material to match the sheeting.
F. Accessories/Fasteners: Fasteners shall be of type, material, size, corrosion resistance, holding power and other properties required to fasten miscellaneous framing members to substrates. Accessories and their fasteners shall be capable of resisting the specified design wind uplift forces and shall allow for thermal movement of the wall panel system. Exposed fasteners shall not restrict free movement of the roof panel system resulting from thermal forces, except at designed points of roof panel fixity
G. Substrate shall be Plywood
H. Underlayment
    1. 1. On all surfaces to be covered with metal wall panels, furnish and install a 40 mil "Peel & Stick membrane", required as outlined by metal panel manufacturer. Membrane to be a

minimum of 40 mil thickness, smooth, non-granular, by one of the following manufacturers:
    a. W.R Grace "Ice & Water Shield"
    b. Cetco Strongseal
    c. Carlisle CCW WIP 300HT
    d. Interwrap Titanium PSU
    e. MFM Corp "Wind & Water Shield"
    f. Polyguard Deck Guard HT of Polyglas HT
    g. Tamko TW Tile and Metal Underlayment

I. Sealants
    1. Provide two-part polysulfide class B non-sag type for vertical and horizontal joints or
    2. One part polysulfide not containing pitch or phenolic extenders or
    3. Exterior grade silicone sealant recommended by roofing manufacturer or
    4. One part non-sag, gun grade exterior type polyurethane recommended by the roofing manufacturer.

2.4 FABRICATION

A. Comply with dimensions, profile limitations, gauges and fabrication details shown and if not shown, provide manufacturer's standard product fabrication.
    1. Max panel length is 55'.
B. Fabricate components of the system in factory, ready for field assembly.
C. Fabricate components and assemble units to comply with fire performance requirements specified.
D. Apply specified finishes in conformance with manufacturer's standard, and according to manufacturer's instructions.

PART 3 - EXECUTION

3.1 INSPECTION

A. Examine alignment of structural steel and related supports, primary and secondary roof framing, solid roof sheathing, prior to installation.
B. For the record, prepare written report, endorsed by installer, listing conditions detrimental to performance of the Work.
C. Proceed with installation only after unsatisfactory conditions have been corrected.

3.2 FASTENERS

A. Secure units to supports.
B. Place fasteners as indicated in manufacturer's standards.

3.3 INSTALLATION

A. Compliance: Comply with manufacturer's product data, recommendations and installation instructions for substrate verification, preparation requirements and installation.
B. Panels shall be installed plumb and true in a proper alignment and in relation to the structural framing. The erector must have at least five years successful experience with similar applications.
C. Install metal panels, fasteners, trim and related sealants in accordance with approved shop drawings and as may be required for a weather-tight installation.
D. Provide uniform, neat seams.

E. Fasteners: Conceal fasteners where possible in exposed work. Cover and seal fasteners and anchors for watertight and leakproof installation.
F. Remove all strippable coating and provide a dry-wipe down cleaning of the panels as they are erected.

3.4 DAMAGED MATERIAL

A. Upon determination of responsibility, repair or replace damaged metal panels and trim to the satisfaction of the Architect and Owner.

3.5 CLEANING

A. Cleaning: Remove temporary coverings and protection of adjacent work areas. Repair or replace damage installed products. Clean installed products in accordance with manufacturer's instruction prior to owner's acceptance. Remove construction debris from project site and legally dispose of debris.

END OF SECTION 07 41 00

SECTION 07 41 13 - PREFORMED METAL STANDING SEAM ROOFING

PART 1 - GENERAL

1.1 DESCRIPTION OF WORK

A. This section covers the pre-finished, pre-fabricated Architectural standing seam roof system. All metal trim, accessories, fasteners, insulation and sealants indicated on the drawings as part of this section.
B. Drawings and general provisions of the Contract, including general and Supplementary Conditions and Division 01 Specifications, apply to this section.
C. Related Work Specified Elsewhere
    1. Roof Deck structural steel, flat roof systems, perimeter edge systems. Roof hatches, firestopping not included in this section.

1.2 SUMMARY

A. Section Includes
    1. Factory formed Standing Seam metal roof panels
B. Related work specified elsewhere. (Note: select from the below or add appropriate sections)
    1. Section 05100 - Structural Steel
    2. Section 05200 or 05400 - Steel Joists
    3. Section 07600 - Flashing and Sheet Metal

1.3 DEFINITIONS

A. Metal Roof Panel Assembly: Metal roof panels, attachment system components, miscellaneous metal framing, thermal, and accessories necessary for a complete weathertight roofing system.
B. References:
    1. American Society for Testing and Materials (ASTM)
        a. ASTM A 653: Steel Sheet, Zinc Coated by the Hot Dip Process
        b. ASTM A 792: Steel Sheet, Aluminum-Zinc Alloy Coated by the Hot Dip Process
        c. ASTM B 209: Aluminum and Aluminum Alloy Sheet and Plate
        d. ASTM B370 Standard Specification for Copper Sheet and Strip for Building Construction
    2. Sheet Metal and Air Conditioning Contractors National Association (SMACNA)
        a. SMACNA Architectural Sheet Metal Manual, 1993 edition
    3. American Iron and Steel Institute (AISI)
        a. AISI Cold Formed Steel Design Manual
    4. Aluminum Association
        a. Aluminum Design Manual
    5. Metal Construction Association
        a. Preformed metal Wall Guidelines
    6. Code References
        a. ASCE, Minimum Loads for Buildings and Other Structures
        b. BOCA National Building Codes
        c. UBC Uniform Building Code
        d. SBC Standard Building Code

1.4 QUALITY ASSURANCE

A. Petersen Aluminum Corp, Annapolis Junction, MD, 800-344-1400 products establish a minimum of quality required.

B. Manufacturer and erector shall demonstrate experience of a minimum of five (5) years in this type of project.
C. Panels shall be factory-produced only. No portable, installer-owned or installer-rented machines will be permitted.

1.5 SUBSTITUTIONS

A. The material, products and equipment specified in this section establish a standard for required function, dimension, appearance and quality to be met by any proposed substitution.

1.6 SYSTEM DESCRIPTION

A. Material to comply with:
    1. ASTM B209 Standard Specification for Aluminum and Aluminum-Alloy Sheet and Plate

1.7 ROOF SYSTEM PERFORMANCE TESTING

A. General Performance: Metal roof panels shall comply with performance requirements without failure due to defective manufacture, fabrication, installation or other defects in construction.
B. Roof System shall be designed to meet Standard Building Code Wind Load requirements.
C. Panels to meet:
    1. Water Penetration: When tested per ASTM E-283/1680 and ASTM E-331/1646 there shall be no uncontrolled water penetration or air infiltration through the panel joints.
    2. Roof System shall be designed to meet a UL Class 90 wind uplift in accordance with UL standard 580 and panel system shall be ASTM 1592 Tested and approved
    3. UL 2218 - Impact Resistance rated.

1.8 WARRANTIES

A. Weathertight warranty: Manufacturer's standard form in which manufacturer agrees to repair or replace standing seam metal roof panel assemblies that fail to remain weathertight, including leaks, within specified warranty period.
    1. Warranty Period: 20 Years from date of Substantial Completion
B. Finish warranty: Manufacturer's standard form in which manufacturer agrees to repair finish or replace standing seam metal roof panels that show evidence of deterioration of factory-applied finish within specified warranty period.
    1. Exposed Panels Finish - deterioration includes the following:
        a. Color fading more than 5 hunter units when tested according to ASTM D 2244
        b. Chalking in excess of a No. 8 rating when tested according to ASTM D 4214
        c. Cracking, checking, peeling or failure of a paint to adhere to a bare metal.
    2. Warranty Period: 20 Years from the date of substantial completion
C. Applicator shall furnish written warranty for a two (2) year period from date of substantial completion of building covering repairs required to maintain roof and flashings in watertight condition.

1.9 SUBMITTALS

A. Furnish detailed drawings showing profile and gauge of exterior sheets, location and type of fasteners, location, gauges, shape and method of attachment of all trim locations and types of sealants, and any other details as may be required for a weather-tight installation.
B. Provide finish samples of all colors specified.
C. Shop drawings: Show fabrication and installation layouts of metal roof panels, metal wall panels or metal soffit panels, details of edge conditions, side-seam joints, panel profiles, corners,

anchorages, trim, flashings, closures and accessories, and special details. Distinguish between factory and field-assembled work

D. Coordination Drawings: Roof plans, drawn to scale, on which the following are shown and coordinated with each other, base don input from installer of the items involved:
    1. Roof panels and attachments
    2. Metal trusses, bracings and supports
    3. Roof-mounted items including snow guards and items mounted on roof curbs.

1.10 DELIVERY, STORAGE AND HANDLING

A. Ordering: Comply with manufacturer's ordering instruction and lead time requirements to avoid construction delays.
B. Deliver components, sheets, metal roof panels and other manufactured items so as not to be damaged or deformed. Package metal roof panels for protection during transportation and handling.
C. Unload, store and erect metal roof panels in a manner to prevent bending, warping, twisting and surface damage.
D. Stack metal roof panels on platforms or pallets, covered with suitable weathertight and ventilated covering. Store metal roof panels to ensure dryness. Do not store metal roof panels in contact with other materials that might cause staining, denting or other surface damage.
E. Protect strippable protective coating on any metal coated product from exposure to sunlight and high humidity, except to the extent necessary for material installation.

1.11 PROJECT CONDITIONS

A. Weather Limitations: proceed with installation only when existing and forecasted weather conditions permit metal roof panel work to be performed.
B. Field Measurements: Verify actual dimensions of construction contiguous with metal roof panels by field measurements before fabrication.

1.12 COORDINATION

A. Coordinate sizes and locations of roof curbs, equipment supports and roof penetrations with actual equipment provided.
B. Coordinate metal roof panels with rain drainage work, flashing, trim and construction of decks, parapet walls and other adjoining work to provide a leakproof, secure and noncorrosive installation.

PART 2 - PRODUCTS

2.1 PANEL DESIGN

A. General: Provide factory-formed metal roof panels designed to be installed by lapping and interconnecting raised side edges of adjacent panels with joint type indicated and mechanically attaching panels to supports using concealed clips in side laps. Include clips, cleats, pressure plates and accessories required for a weathertight installation.
B. Roof panels shall be Snap Clad standing seam in 12" widths with 1 3/4" high seam.
C. Panels to be produced with Factory supplied hot melt mastic in the seams.
D. Panels to be produced Smooth - Factory Standard.
E. Panels to be designed for attachment with concealed fastener clips, spaced as required by the manufacturer to provide for both positive and negative design loads, while allowing for the expansion and contraction of the entire roof system resulting from variations in temperature.
F. Forming: Use continuous end rolling method. No end laps on panels. No portable rollforming machines will be permitted on this project, no installer-owned or installer-rented machines will be

permitted. It is the intent of the Architect to provide Factory-Manufactured panel systems only for this project.

2.2 ACCEPTABLE MANUFACTURERS

A. This project is detailed around the roofing product of Petersen Aluminum Corporation Petersen Aluminum Corp, Annapolis Junction, MD, 800-344-1400, Snap Clad.
B. Equal: Centria – Standing Seam Metal Roof

2.3 MATERIALS AND FINISHES

A. Preformed roofing panels shall be fabricated of .040 Aluminum
B. Color shall be Slate Gray
C. Finish shall be Kynar 500 or Hylar 5000 Fluorocarbon coating with a top side film thickness of 0.70 to 0.90 mil over a 0.25 to 0.3 mil prime coat to provide a total dry film thickness of 0.95 to 1.25 mil, to meet AAMA 621. Bottom side shall be coated with a primer with a dry film thickness of 0.25 mil. Finish shall conform to all tests for adhesions, flexibility and longevity as specified by Kynar 500 or Hylar 5000 finish supplier.
D. If Strippable coating to be applied on the pre-finished panels to the top side to protect the finish during fabrication, shipping and handling, film shall be removed before installation.
E. Trim: Trim shall be fabricated of the same material and finish to match the profile, and will be press broken in lengths of 10 to 12 feet. Trim shall be formed only by the manufacturer of their approved dealer. Trim to be erected in overlapped condition. Use lap strips only as indicated on drawings. Miter conditions shall be factory welded material to match the sheeting.
F. Closures: use composition or metal profiled closures at the top of each elevation to close ends of the panels. Metal closures to be made in the same material and finish as face sheet.
G. Fasteners: Fasteners shall be of type, material, size, corrosion resistance, holding power and other properties required to fasten miscellaneous framing members to substrates.
H. Substrate shall be ISO
I. Roofing Underlayment
    1. On all surfaces to be covered with roofing material, furnish and install a 40 mil Peel & Stick membrane, required as outlined by metal panel manufacturer. Membrane to be a minimum of 40 mil thickness, smooth, non-granular, high temperature. **Basis of design:** Carlisle WIP 300 HT High Temperature Protection Self Adhering Roofing Underlayment. Other acceptable manufacturers include:
        a. W.R Grace "Ice & Water Shield"
        b. Interwrap Titanium PSU-30
        c. Tamko TW Tile and Metal Underlayment
    2. Underlayment shall be laid in horizontal layers with joints lapped toward the eaves a minimum of 6, and well secured along laps and at ends as necessary to properly hold the felt in place. All underlayment shall be preserved unbroken and whole.
    3. Peel and Stick Underlayment shall lap all hips and ridges at least 12 to form double thickness and shall be lapped 6 over the metal of any valley or built-in gutters and shall be installed as required by the Standing Seam Panel Manufacturer to attain the desired 20 Year Weathertightness Warranty.
J. Sealants
    1. Provide two-part polysulfide class B non-sag type for vertical and horizontal joints or
    2. one part polysulfide not containing pitch or phenolic extenders or
    3. Exterior grade silicone sealant recommended by roofing manufacturer or
    4. One part non-sag, gun grade exterior type polyurethane recommended by the roofing manufacturer.

2.4 FABRICATION

A. Comply with dimensions, profile limitations, gauges and fabrication details shown and if not shown, provide manufacturer's standard product fabrication.
B. Fabricate components of the system in factory, ready for field assembly.
C. Fabricate components and assemble units to comply with fire performance requirements specified.
D. Apply specified finishes in conformance with manufacturer's standard, and according to manufacturer's instructions.

PART 3 - EXECUTION

3.1 INSPECTION

A. Examine alignment of structural steel and related supports, primary and secondary roof framing, solid roof sheathing, prior to installation.
B. For the record, prepare written report, endorsed by installer, listing conditions detrimental to performance of the Work.
C. Proceed with installation only after unsatisfactory conditions have been corrected.

3.2 FASTENERS

A. Secure units to supports
B. Place fasteners as indicated in manufacturer's standards.

3.3 INSTALLATION

A. Panels shall be installed plumb and true in a proper alignment and in relation to the structural framing. The erector must have at least five years successful experience with similar applications.
B. Install metal panels, fasteners, trim and related sealants in accordance with approved shop drawings and as may be required for a weather-tight installation.
C. Remove all strippable coating and provide a dry-wipe down cleaning of the panels as they are erected.

3.4 DAMAGED MATERIAL

A. Upon determination of responsibility, repair or replace damaged metal panels and trim to the satisfaction of the Architect and Owner.

END OF SECTION 07 41 13

SECTION 07 54 00 - THERMOPLASTIC MEMBRANE ROOFING

PART 1 GENERAL

1.01 SECTION INCLUDES

A. Adhered system with thermoplastic roofing membrane.

B. Insulation, flat and tapered.

C. Flashings.

D. Roofing cant strips, stack boots, roofing expansion joints, and walkway pads.

1.02 RELATED REQUIREMENTS

A. Section 06 1000 - Rough Carpentry: Wood nailers and curbs.

B. Section 07 7100 - Roof Specialties: Prefabricated roofing expansion joint flashing.

C. Section 07 7200 - Roof Accessories: Roof-mounted units; prefabricated curbs.

1.03 REFERENCE STANDARDS

A. ASTM C1177/C1177M - Standard Specification for Glass Mat Gypsum Substrate for Use as Sheathing; 2013.

B. ASTM C1289 - Standard Specification for Faced Rigid Cellular Polyisocyanurate Thermal Insulation Board; 2016.

C. ASTM D6878/D6878M - Standard Specification for Thermoplastic Polyolefin Based Sheet Roofing; 2013.

D. NRCA (RM) - The NRCA Roofing Manual; 2017.

1.04 SUBMITTALS

A. See Section 01 3000 - Administrative Requirements, for submittal procedures.

B. Product Data: Provide data indicating membrane materials, flashing materials, insulation, and fasteners.

C. Shop Drawings: Indicate joint or termination detail conditions and conditions of interface with other materials.

D. Warranty Documentation:
   1. Submit manufacturer warranty and ensure that forms have been completed in Owner's name and registered with manufacturer.
   2. Submit installer's certification that installation complies with warranty conditions for waterproof membrane.

1.05 QUALITY ASSURANCE

A. Manufacturer Qualifications: Company specializing in manufacturing the products specified in this section with minimum three years of documented experience.

B. Installer Qualifications: Company specializing in performing the work of this section with at least three years of documented experience.

1.06 DELIVERY, STORAGE, AND HANDLING

A. Deliver products in manufacturer's original containers, dry, undamaged, with seals and labels intact.

B. Store products in weather protected environment, clear of ground and moisture.

C. Protect foam insulation from direct exposure to sunlight.

1.07 FIELD CONDITIONS

A. Do not apply roofing membrane during unsuitable weather.

B. Do not apply roofing membrane when ambient temperature is below 40 degrees F (5 degrees C) or above membrane manufacturer's recommendations.

C. Do not apply roofing membrane to damp or frozen deck surface or when precipitation is expected or occurring.

D. Do not expose materials vulnerable to water or sun damage in quantities greater than can be weatherproofed the same day.

1.08 WARRANTY

A. See Section 01 7800 - Closeout Submittals, for additional warranty requirements.

B. Material Warranty: Provide membrane manufacturer's warranty agreeing to replace material that shows manufacturing defects within 5 years after installation.

C. System Warranty: Provide manufacturer's system warranty agreeing to repair or replace roofing that leaks or is damaged due to wind or other natural causes.
   1. Warranty Term: 20 years.
   2. For repair and replacement include costs of both material and labor in warranty.

PART 2 PRODUCTS

2.01 MANUFACTURERS

A. Thermoplastic Polyolefin (TPO) Membrane Materials:
   1. Tremco; Inc:, www.tremcoroofing.com.
   2. Carlisle Roofing Systems, Inc; Sure-Weld TPO: www.carlisle-syntec.com/#sle.
   3. Holcim Elevate: https://www.holcimelevate.com/us-en

B. Insulation:
   1. BASF Corporation; BASF Neopor GPS: www.neopor.basf.us/#sle.
   2. Dow Chemical Co; www.dow.com/#sle.
   3. Hunter Panels, LLC; www.hpanels.com.
   4. Owens Corning Corporation; www.ocbuildingspec.com/#sle.

2.02 ROOFING

A. Thermoplastic Membrane Roofing: One ply membrane, fully adhered, over cover board and insulation.

B. Comply with applicable local building code requirements. Assume 3-second wind speed gusts of 115-mph, Surface Roughness C. Importance factor 1.15 and a safety factor of 2..

C. Acceptable Insulation Types - Tapered Application.

2.03 ROOFING MEMBRANE AND ASSOCIATED MATERIALS

A. Membrane:
   1. Material: Thermoplastic polyolefin (TPO) complying with ASTM D6878/D6878M.
   2. Reinforcing: Internal fabric.
   3. Thickness: 0.060 inch (1.5 mm), minimum.
   4. Sheet Width: Factory fabricated into largest sheets possible.
   5. Color: Gray.

B. Seaming Materials: As recommended by membrane manufacturer.

C. Flexible Flashing Material: Same material as membrane.

2.04 SUBSTRATE

A. Roof: Glass mat faced gypsum panels, ASTM C1177/C1177M, fire resistant type, 1/2 inch (13 mm) thick.
   1. Manufacturers:
      a. Georgia-Pacific; DensDeck: www.densdeck.com/#sle.
      b. National Gypsum Company; DEXcell Glass Mat Roof Board: www.nationalgypsum.com/#sle.

2.05 VAPOR BARRIER

A. Vapor Barrier: Continuous AVB between metal deck and insulation; provide product by same manufacturer as the roofing membrane.
   1. Manufacturers:
      a. Tremco: AVC Max Membrane
      b. Carlisle Roofing: VapAir Seal MD
      c. Holcim Elevate: V-Force

2.06 INSULATION

A. Polyisocyanurate Board Insulation: Rigid cellular foam, complying with ASTM C1289, Type I, aluminum foil both faces; Class 1, non-reinforced foam core and with the following characteristics:
   1. Compressive Strength: 20 psi (138 kPa).
   2. Board Size: 48 by 96 inch (1220 by 2440 mm).
   3. Total R Value: Total R Value: 25 minimum.
   4. Tapered Board: Slope as indicated; minimum thickness; fabricate of fewest layers possible.
   5. Manufacturers:
      a. Dow Chemical Co; www.dow.com.
      b. GAF; EnergyGuard Ultra Polyiso Tapered Insulation: www.gaf.com/#sle.
      c. Versico, a division of Carlisle Construction Materials, Inc; SecurShield Insulation: www.versico.com/#sle.

2.07 ACCESSORIES

A. Stack Boots: Prefabricated flexible boot and collar for pipe stacks through membrane; same material as membrane.

B. Membrane Adhesive: As recommended by membrane manufacturer.

C. Strip Reglet Devices: Extruded plastic, maximum possible lengths per location, with attachment flanges.

D. Sealants: As recommended by membrane manufacturer.

E. Walkway Pads: Suitable for maintenance traffic, contrasting color or otherwise visually distinctive from roof membrane.
   1. Composition: Asphaltic with mineral granule surface or Roofing membrane manufacturer's standard.
   2. Size: 18 by 18 inch (460 by 460 mm).
   3. Surface Color: White or yellow.

PART 3 EXECUTION

3.01 EXAMINATION

A. Verify that surfaces and site conditions are ready to receive work.

B. Verify deck is supported and secure.

C. Verify deck is clean and smooth, flat, free of depressions, waves, or projections,

properly sloped and suitable for installation of roof system.

D. Verify deck surfaces are dry and free of snow or ice.

E. Verify that roof openings, curbs, and penetrations through roof are solidly set, and cant strips are in place.

3.02 INSTALLATION - GENERAL

A. Perform work in accordance with manufacturer's instructions and NRCA (RM) applicable requirements.

B. Do not apply roofing membrane during unsuitable weather.

C. Do not apply roofing membrane when ambient temperature is outside the temperature range recommended by manufacturer.

D. Do not apply roofing membrane to damp or frozen deck surface or when precipitation is expected or occurring.

E. Do not expose materials vulnerable to water or sun damage in quantities greater than can be weatherproofed the same day.

3.03 INSULATION APPLICATION - UNDER MEMBRANE

A. Apply vapor barrier to deck surface with adhesive in accordance with manufacturer's instructions.
   1. Extend vapor barrier over cant strips and blocking to deck edge.
   2. Install flexible flashing from vapor barrier to air seal material of wall construction, lap and seal to provide continuity of the air barrier plane.

B. Lay subsequent layers of insulation with joints staggered minimum 6 inch (150 mm) from joints of preceding layer.

C. Place tapered insulation to the required slope pattern in accordance with manufacturer's instructions.

D. Lay boards with edges in moderate contact without forcing. Cut insulation to fit neatly to perimeter blocking and around penetrations through roof.

E. Do not apply more insulation than can be covered with membrane in same day.

3.04 MEMBRANE APPLICATION

A. Roll out membrane, free from wrinkles or tears. Place sheet into place without stretching.

B. Shingle joints on sloped substrate in direction of drainage.

C. Fully Adhered Application: Apply adhesive to substrate at rate according to manufacturer’s recommendations. Fully embed membrane in adhesive except in areas directly over or within 3 inches (75 mm) of expansion joints. Fully adhere one roll before proceeding to adjacent rolls.

D. Overlap edges and ends and seal seams by heat welding, minimum 3 inches (75 mm). Seal permanently waterproof. Apply uniform bead of sealant to joint edge.

E. At intersections with vertical surfaces:
   1. Extend membrane over cant strips and up a minimum of 4 inches (100 mm) onto vertical surfaces.
   2. Fully adhere flexible flashing over membrane and up to nailing strips.

F. Around roof penetrations, seal flanges and flashings with flexible flashing.

G. Coordinate installation of roof drains and related flashings.

3.05 FIELD QUALITY CONTROL

A. See Section 01 4000 - Quality Requirements, for general requirements for field quality control and inspection.

B. Require site attendance of roofing material manufacturer’s representative at start, during installation of the Work.

3.06 CLEANING

A. See Section 01 7419 - Construction Waste Management and Disposal, for additional requirements.

B. Remove bituminous markings from finished surfaces.

C. In areas where finished surfaces are soiled by work of this section, consult manufacturer of surfaces for cleaning advice and conform to their documented instructions.

D. Repair or replace defaced or damaged finishes caused by work of this section.

3.07 PROTECTION

A. Protect installed roofing and flashings from construction operations.

B. Where traffic must continue over finished roof membrane, protect surfaces using durable materials.

END OF SECTION 07 54 00

SECTION 07 62 00 - SHEET METAL FLASHING AND TRIM

PART 1 - GENERAL

1.1 RELATED DOCUMENTS

A. Drawings and general provisions of the Contract, including General and Supplementary Conditions and Division 01 Specification Sections, apply to this Section.

1.2 SUMMARY

A. Section Includes:

1. Formed roof drainage system.
2. Formed low-slope roof flashing and trim, prefinished.
3. Formed wall flashing and trim

B. Related Sections include the following:

1. Division 04 Section “Unit Masonry”
2. Division 06 Section "Rough Carpentry".
3. Division 07 Section “Sheathing”
4. Division 07 Section “Weather Barriers”
5. Division 07 Section "Roof Accessories".
6. Division 07 Section "Joint Sealants”.

1.3 ACTION SUBMITTALS

A. Product Data: For each type of product indicated. Include construction details, material descriptions, dimensions of individual components and profiles, and finishes. include conformance to green building criteria.

B. Shop Drawings: Show layouts of sheet metal flashing and trim, including plans and elevations. Distinguish between shop- and field-assembled work. Include the following:

1. Identify material, thickness, weight, and finish for each item and location in Project.
2. Details for forming sheet metal flashing and trim, including profiles, shapes, seams, and dimensions.
3. Details for fastening, joining, supporting, and anchoring sheet metal flashing and trim, including fasteners, clips, cleats, and attachments to adjoining work.

C. Samples for Initial Selection: For each type of sheet metal flashing and trim indicated with factory-applied color finishes.

1. Include similar Samples of trim and accessories involving color selection.

D. Samples for Verification: For each type of exposed finish required, prepared on Samples of size indicated below:

1. Sheet Metal Flashing: 12 inches (300 mm) long. Include fasteners, cleats, clips, closures, and other attachments.

2. Trim: 12 inches (300 mm) long. Include fasteners and other exposed accessories.
3. Accessories: Full-size Sample.

1.4 CLOSEOUT SUBMITTALS

A. Maintenance data.

B. Warranty: Special warranty specified in this Section.

1.5 QUALITY ASSURANCE

A. Sheet Metal Flashing and Trim Standard: Comply with SMACNA's "Architectural Sheet Metal Manual." Conform to dimensions and profiles shown unless more stringent requirements are indicated.

1.6 DELIVERY, STORAGE, AND HANDLING

A. Deliver sheet metal flashing materials and fabrications undamaged. Protect sheet metal flashing and trim materials and fabrications during transportation and handling.

B. Unload, store, and install sheet metal flashing materials and fabrications in a manner to prevent bending, warping, twisting, and surface damage.

C. Stack materials on platforms or pallets, covered with suitable weathertight and ventilated covering. Do not store sheet metal flashing and trim materials in contact with other materials that might cause staining, denting, or other surface damage.

1.7 COORDINATION

A. Coordinate installation of sheet metal flashing and trim with interfacing and adjoining construction to provide a leakproof, secure, and noncorrosive installation.

1.8 WARRANTY

A. Aluminum Finish: Provide manufacturer’s standard 20-year warranty covering factory-applied aluminum finish against chipping, fading, and peeling.

PART 2 - PRODUCTS

2.1 PERFORMANCE REQUIREMENTS

A. General: Install sheet metal flashing and trim to withstand wind loads, structural movement, thermally induced movement, and exposure to weather without failing, rattling, leaking, and fastener disengagement.

B. Thermal Movements: Provide sheet metal flashing and trim that allow for thermal movements resulting from the following maximum change (refer to structural drawings) in ambient and surface temperatures by preventing buckling, opening of joints, hole elongation, overstressing of

components, failure of joint sealants, failure of connections, and other detrimental effects. Provide clips that resist rotation and avoid shear stress as a result of sheet metal and trim thermal movements. Base engineering calculation on surface temperatures of materials due to both solar heat gain and nighttime-sky heat loss.

1. Temperature Change (Range): 120 deg F, ambient; 180 deg F, material surfaces.

C. Water Infiltration: Provide sheet metal flashing and trim that do not allow water infiltration to building interior.

2.2 MANUFACTURERS

A. Manufacturers: Subject to compliance with requirements, provide factory-fabricated units of one of following, or acceptable substitute, companies:

1. Alcoa Home Exteriors, Inc.
2. Cheney Flashing Co.
3. W.P. Hickman Co.

2.3 SHEET METALS

A. Aluminum: Provide aluminum of alloy and temper recommended by manufacturer for use intended, and as required for proper application of finish indicated.

1. For aluminum sheet, comply with ASTM B209, 3003-H19 alloy and temper, unless otherwise required.
2. For extruded aluminum, comply with ASTM B221, 60063-T42 alloy and temper, unless otherwise required.
3. Thickness: .040 inches
4. Finish: Provide shop-applied and baked-on fluoropolymer coating complying with AAMA 2605. Provide a 2-coat fluoropolymer finish coating which contains 70% (min.) Kynar 500 or Hylar 5000 fluoropolymer resin, applied over an epoxy primer. Apply coating in strict compliance with paint manufacturer's recommendations, using an applicator approved by paint manufacturer.

B. Stainless Steel Sheet: ASTM A240/A240M, Type 304, 0.0179 inch thick, dead soft, fully annealed; with smooth surface.

2.4 UNDERLAYMENT MATERIALS

A. Felt: ASTM D226/D226M, Type II (No. 30), asphalt-saturated organic felt; nonperforated.

B. Slip Sheet: Rosin-sized building paper, 3 lb/100 sq. ft. (0.16 kg/sq. m) minimum.

2.5 MISCELLANEOUS MATERIALS

A. Provide materials and types of fasteners, solder, welding rods, protective coatings, separators, sealants, and other miscellaneous items as required for complete sheet metal flashing and trim installation.

B. Fasteners: Wood screws, annular threaded nails, self-tapping screws, self-locking rivets and bolts, and other suitable fasteners designed to withstand design loads.

1. General: Blind fasteners or self-drilling screws, gasketed, with hex-washer head.

    a. Exposed Fasteners: Heads matching color of sheet metal by means of plastic caps or factory-applied coating.
    b. Fasteners for Flashing and Trim: Blind fasteners or self-drilling screws, gasketed, with hex washer head.
    c. Blind Fasteners: High-strength aluminum or stainless-steel rivets.

C. Solder:

1. For Stainless Steel: ASTM B 32, Grade Sn60, with acid flux of type recommended by stainless-steel sheet manufacturer.
2. For Zinc: ASTM B 32, 60 percent lead and 40 percent tin with low antimony, as recommended by manufacturer.

D. Sealant Tape: Pressure-sensitive, 100 percent solids, polyisobutylene compound sealing tape with release-paper backing. Provide permanently elastic, nonsag, nontoxic, nonstaining tape.

E. Elastomeric Sealant: ASTM C920, elastomeric silicone polymer sealant; of type, grade, class, and use classifications required to seal joints in sheet metal flashing and trim and remain watertight.

F. Butyl Sealant: ASTM C1311, single-component, solvent-release butyl rubber sealant; polyisobutylene plasticized; heavy bodied for hooked-type expansion joints with limited movement.

G. Epoxy Seam Sealer: Two-part, noncorrosive, aluminum seam-cementing compound, recommended by aluminum manufacturer for exterior nonmoving joints, including riveted joints.

H. Bituminous Coating: Cold-applied asphalt mastic, SSPC-Paint 12, compounded for 15-mil dry film thickness per coat. Provide inert-type noncorrosive compound free of asbestos fibers, sulfur components, and other deleterious impurities.

I. Asphalt Roofing Cement: ASTM D4586, asbestos free, of consistency required for application.

2.6 MANUFACTURED SHEET METAL FLASHING AND TRIM

A. Surface-mounted through wall Ribbed Sheet Metal Flashing: Manufacture surface-mounted through wall sheet metal flashing with ribs at 3-inch intervals along length of flashing. Manufacture with snaplock receiver on exterior face to receive counterflashing.

1. Stainless Steel: 0.0179 inch thick.

    a. Products:

        1) Cheney Flashing Company, Inc.; Cheney Flashing (Dovetail).
        2) Cheney Flashing Company, Inc.; Cheney Flashing (Sawtooth).
        3) Hohmann & Barnard, Inc.
        4) Keystone Flashing Company, Inc.; Keystone Three-Way Interlocking Thruwall Flashing.

B. Reglets: Units of type, material, and profile indicated, formed to provide secure interlocking of separate reglet and counterflashing pieces, and compatible with flashing indicated with factory-mitered and welded corners and junctions.

1. Manufacturers:

a. Cheney Flashing Company, Inc.
b. Heckmann Building Products Inc.
c. Hickman, W. P. Company.
d. Keystone Flashing Company, Inc.

2. Material: Stainless steel, 0.0187 inch thick.
3. Surface-Mounted Type: Provide with slotted holes for fastening to substrate, with neoprene or other suitable weatherproofing washers, and with channel for sealant at top edge.

2.7 FABRICATION, GENERAL

A. General: Custom fabricate sheet metal flashing and trim to comply with recommendations in SMACNA's "Architectural Sheet Metal Manual" that apply to design, dimensions, metal, and other characteristics of item indicated. Shop fabricate items where practicable. Obtain field measurements for accurate fit before shop fabrication.

B. Fabricate sheet metal flashing and trim in thickness or weight needed to comply with performance requirements, but not less than that specified for each application and metal.

C. Fabricate sheet metal flashing and trim without excessive oil canning, buckling, and tool marks and true to line and levels indicated, with exposed edges folded back to form hems.
1. Seams for Aluminum: Fabricate nonmoving seams with flat-lock seams. Form seams and seal with epoxy seam sealer. Rivet joints for additional strength.
2. Seams for Other Than Aluminum: Fabricate nonmoving seams in accessories with flat-lock seams.

D. Sealed Joints: Form non-expansion but movable joints in metal to accommodate elastomeric sealant to comply with SMACNA recommendations.

E. Expansion Provisions: Where lapped or bayonet-type expansion provisions in the Work cannot be used, form expansion joints of intermeshing hooked flanges, not less than 1 inch deep, filled with butyl sealant concealed within joints.

F. Conceal fasteners and expansion provisions where possible on exposed-to-view sheet metal flashing and trim, unless otherwise indicated.

G. Fabricate cleats and attachment devices from same material as accessory being anchored or from compatible, noncorrosive metal.

1. Thickness: As recommended by SMACNA's "Architectural Sheet Metal Manual" for application but not less than thickness of metal being secured.

2.8 LOW-SLOPE ROOF SHEET METAL FABRICATIONS

A. Roof Edge Flashing (Gravel Stop) and Fascia Caps: Fabricate in minimum 96-inch- long, but not exceeding 10-foot-long, sections. Furnish with 6-inch-wide joint cover plates.

1. Joint Style: Butt, with 12-inch- (300-mm-) wide concealed backup plate.
2. Fabricate with scuppers spaced 10 feet apart, of dimensions required with 4-inch wide flanges and base extending 4 inches beyond cant or tapered strip into field of roof. Fasten gravel guard angles to base of scupper.

B. Copings: Fabricate in minimum 96-inch-long, but not exceeding 10-foot-long, sections. Fabricate joint plates of same thickness as copings. Furnish with continuous cleats to support edge of external leg and drill elongated holes for fasteners on interior leg. Miter corners, seal, and solder or weld watertight.

1. Joint Style: Butt, with 12-inch- (300-mm-) wide concealed backup plate.
2. Fabricate copings from the following material:
   a. Aluminum: 0.050 inch (1.2 mm) thick.

C. Base Flashing: Fabricate from the following material:

1. Aluminum: 0.040 inch (1.0 mm) thick.

D. Counterflashing: Fabricate from the following material:

1. Aluminum: 0.0320 inch (0.8 mm) thick.

E. Flashing Receivers: Fabricate from the following material:

1. Aluminum: 0.0320 inch (0.8 mm) thick.

F. Roof-Penetration Flashing: Fabricate from the following material:

1. Galvanized Steel: 0.0276 inch (0.7 mm) thick.

G. Splash Pans: Fabricate from the following material:

1. Aluminum: 0.040 inch (1.0 mm) thick.

H. Roof-Drain Flashing: Fabricate from the following material:

1. Stainless Steel: 0.0156 inch thick.

2.9 WALL SHEET METAL FABRICATIONS

A. Through-Wall Flashing: Fabricate continuous flashings in minimum 96-inch-long, but not exceeding 12 foot long, sections, under copings, at shelf angles, and where indicated. Fabricate discontinuous lintel, sill, and similar flashings to extend 6 inches beyond each side of wall openings. Form with 2-inch-high end dams. Fabricate from the following material:

1. Aluminum: .040 inch (1.0 mm) thick.

B. Openings Flashing in Frame Construction: Fabricate head, sill, jamb, and similar flashings to extend 4 inches beyond wall openings. Form head and sill flashing with 2-inch-high end dams. Fabricate from the following material:

1. Aluminum: .040 inch (1.0 mm) thick.

2.10 MISCELLANEOUS SHEET METAL FABRICATIONS

A. Equipment Support Flashing: Fabricate from the following material:

1. Galvanized Steel: 0.0276 inch thick.

B. Overhead-Piping Safety Pans: Fabricate from the following material:

1. Galvanized Steel: 0.0396 inch thick.

PART 3 - EXECUTION

3.1 EXAMINATION

A. Examine substrates, areas, and conditions, with Installer present, to verify actual locations, dimensions and other conditions affecting performance of work.

1. Verify that substrate is sound, dry, smooth, clean, sloped for drainage, and securely anchored.
2. Proceed with installation only after unsatisfactory conditions have been corrected.

3.2 INSTALLATION, GENERAL

A. General: Anchor sheet metal flashing and trim and other components of the Work securely in place, with provisions for thermal and structural movement. Use fasteners, solder, welding rods, protective coatings, separators, sealants, and other miscellaneous items as required to complete sheet metal flashing and trim system.

1. Torch cutting of sheet metal flashing and trim is not permitted.

B. Metal Protection: Where dissimilar metals will contact each other or corrosive substrates, protect against galvanic action by painting contact surfaces with bituminous coating or by other permanent separation as recommended by fabricator or manufacturers of dissimilar metals.

1. Coat side of uncoated aluminum and stainless-steel sheet metal flashing and trim with bituminous coating where flashing and trim will contact wood, ferrous metal, or cementitious construction.
2. Underlayment: Where installing metal flashing directly on cementitious or wood substrates, install a course of felt underlayment and cover with a slip sheet or install a course of polyethylene underlayment.
3. Bed flanges in thick coat of asphalt roofing cement where required for waterproof performance.

C. Install exposed sheet metal flashing and trim without excessive oil canning, buckling, and tool marks.

D. Install sheet metal flashing and trim true to line and levels indicated. Provide uniform, neat seams with minimum exposure of solder, welds, and butyl sealant.

E. Install sheet metal flashing and trim to fit substrates and to result in watertight performance. Verify shapes and dimensions of surfaces to be covered before fabricating sheet metal.

1. Space cleats not more than 12 inches apart. Anchor each cleat with two fasteners. Bend tabs over fasteners.

F. Expansion Provisions: Provide for thermal expansion of exposed flashing and trim. Space movement joints at a maximum of 10 feet with no joints allowed within 24 inches of corner or intersection. Where lapped or bayonet-type expansion provisions cannot be used or would not be sufficiently watertight, form expansion joints of intermeshing hooked flanges, not less than 1 inch deep, filled with butyl sealant concealed within joints.

G. Fasteners: Use fasteners of sizes that will penetrate substrate not less than 1-1/4 inches for nails and not less than ¾ inch for wood screws.

1. Galvanized Steel: Use stainless-steel fasteners.
2. Aluminum: Use aluminum or stainless-steel fasteners.
3. Stainless Steel: Use stainless-steel fasteners.

H. Seal joints with butyl sealant as required for watertight construction.

1. Where sealant-filled joints are used, embed hooked flanges of joint members not less than 1 inch into sealant. Form joints to completely conceal sealant. When ambient temperature at time of installation is moderate, between 40 and 70 deg F, set joint members for 50 percent movement either way. Adjust setting proportionately for installation at higher ambient temperatures. Do not install sealant-type joints at temperatures below 40 deg F.
2. Prepare joints and apply sealants to comply with requirements in Division 7 Section "Joint Sealants."

3.3 INSTALLATION OF ROOF-DRAINAGE SYSTEM

A. Install sheet metal roof drainage items to produce complete roof drainage system according to SMACNA recommendations and as indicated. Coordinate installation of roof perimeter flashing with installation of roof drainage system.

B. Drip Edges: Install drip edges where indicated.

C. Splash Pans: Install where downspouts discharge on low-sloped roofs. Set in asphalt roofing cement compatible with roofing membrane.

3.4 INSTALLATION OF ROOF FLASHINGS

A. General: Install sheet metal roof flashing and trim to comply with performance requirements, sheet metal manufacturer's written installation instructions, and SMACNA's "Architectural Sheet Metal Manual." Provide concealed fasteners where possible, set units true to line, and level as indicated. Install work with laps, joints, and seams that will be permanently watertight.

B. Roof Edge Flashing: Anchor to resist uplift and outward forces according to recommendations in FMG Loss Prevention Data Sheet 1-49 for specified wind zone and as indicated.

1. Interlock bottom edge of roof edge flashing with continuous cleats anchored to substrate at 16-inch centers.

C. Copings: Anchor to resist uplift and outward forces according to recommendations in FMG Loss Prevention Data Sheet 1-49 for specified wind zone and as indicated.

1. Interlock exterior bottom edge of coping with continuous cleats anchored to substrate at 16-inch centers.
2. Anchor interior leg of coping with screw fasteners and washers at 18-inch centers.

D. Pipe or Post Counterflashing: Install counterflashing umbrella with close-fitting collar with top edge flared for butyl sealant, extending a minimum of 4 inches over base flashing. Install stainless-steel draw band and tighten.

E. Counterflashing: Coordinate installation of counterflashing with installation of base flashing. Insert counterflashing in reglets or receivers and fit tightly to base flashing. Extend

counterflashing 4 inches over base flashing. Lap counterflashing joints a minimum of 4 inches and bed with butyl sealant.

1. Secure in a waterproof manner by means of interlocking folded seam or blind rivets and sealant.

F. Roof-Penetration Flashing: Coordinate installation of roof-penetration flashing with installation of roofing and other items penetrating roof. Install flashing as follows:

1. Turn lead flashing down inside vent piping, being careful not to block vent piping with flashing.
2. Seal with butyl sealant and clamp flashing to pipes penetrating roof except for lead flashing on vent piping.

3.5 INSTALLATION OF WALL FLASHINGS

A. General: Install sheet metal wall flashing to intercept and exclude penetrating moisture according to SMACNA recommendations and as indicated. Coordinate installation of wall flashing with installation of wall-opening components such as windows, doors, and louvers.

B. Through-Wall Flashing: Installation of manufactured through-wall flashing is specified in Division 4 Section "Unit Masonry Assemblies."

C. Openings Flashing in Frame Construction: Install continuous head, sill, and similar flashings to extend 4 inches beyond wall openings.

3.6 MISCELLANEOUS FLASHING INSTALLATION

A. Overhead-Piping Safety Pans: Suspend pans from pipe and install drain line to plumbing waste or drain line.

B. Equipment Support Flashing: Coordinate installation of equipment support flashing with installation of roofing and equipment. Weld or seal flashing with butyl sealant to equipment support member.

3.7 CLEANING AND PROTECTION

A. Clean exposed metal surfaces of substances that interfere with uniform oxidation and weathering.

B. Clean and neutralize flux materials. Clean off excess solder and sealants.

C. Remove temporary protective coverings and strippable films as sheet metal flashing and trim are installed. On completion of installation, clean finished surfaces, including removing unused fasteners, metal filings, pop rivet stems, and pieces of flashing. Maintain in a clean condition during construction.

D. Replace sheet metal flashing and trim that have been damaged or that have deteriorated beyond successful repair by finish touchup or similar minor repair procedures.

END OF SECTION 076200

SECTION 07 71 00 - ROOF SPECIALTIES

PART 1 GENERAL

1.01 SECTION INCLUDES

A. Manufactured roof specialties, including fascias and gravel stops.

1.02 RELATED REQUIREMENTS

A. Section 07 7200 - Roof Accessories: Manufactured curbs, roof hatches, and snow guards.

B. Section 07 9005 - Joint Sealers.

1.03 REFERENCE STANDARDS

A. AAMA 611 - Voluntary Specification for Anodized Architectural Aluminum; 2014 (2015 Errata).

B. AAMA 2603 - Voluntary Specification, Performance Requirements and Test Procedures for Pigmented Organic Coatings on Aluminum Extrusions and Panels (with Coil Coating Appendix); 2017a.

C. AAMA 2604 - Voluntary Specification, Performance Requirements and Test Procedures for High Performance Organic Coatings on Aluminum Extrusions and Panels (with Coil Coating Appendix); 2017a.

D. ANSI/SPRI/FM 4435/ES-1 - Test Standard for Edge Systems Used with Low Slope Roofing Systems; 2017.

E. NRCA (RM) - The NRCA Roofing Manual; 2017.

1.04 SUBMITTALS

A. See Section 01 3000 - Administrative Requirements, for submittal procedures.

B. Product Data: Provide data on shape of components, materials and finishes, anchor types and locations.

C. Shop Drawings: Indicate configuration and dimension of components, adjacent construction, required clearances and tolerances, and other affected work.

PART 2 PRODUCTS

2.01 MANUFACTURERS

A. Roof Edge Flashings and Copings:
   1. Architectural Products Co; www.archprod.com.
   2. W.P. Hickman Company; PermaSnap 2 Coping: www.wph.com.
   3. Metal-Era Inc; www.metalera.com.
      a. Basis of Design: Anchor-Tite, Extended Fascia, AEF-115

2.02 COMPONENTS

A. Roof Edge Flashings: Factory fabricated to sizes required; mitered, welded corners; concealed fasteners.
   1. Facia Cover Dimension: 11 ½”
   2. Material: .050” Aluminum.
   3. Design Pressure: 176 psf.
   4. Splice Plate: Interlocking, concealed.
   5. Color: Selected from Manufacturers Standard Range

2.03 FINISHES

A. Fluoropolymer Coating: High Performance Organic Finish, AAMA 2604; multiple coat, thermally cured fluoropolymer finish system; color as indicated.

PART 3 EXECUTION

3.01 EXAMINATION

A. Verify that deck, curbs, roof membrane, base flashing, and other items affecting work of this Section are in place and positioned correctly.

3.02 INSTALLATION

A. Install components in accordance with manufacturer's instructions and NRCA (RM) applicable requirements.

B. Seal joints within components when required by component manufacturer.

END OF SECTION 07 71 00

SECTION 07 72 00 - ROOF ACCESSORIES

PART 1 GENERAL

1.1 SECTION INCLUDES

A. Roof hatches, ladder up safety post, and prefabricated hatch rail system.

1.2 RELATED REQUIREMENTS

A. Section 07 6200 - Sheet Metal Flashing and Trim: Roof accessory items fabricated from sheet metal.

1.3 SUBMITTALS

A. Product Data: Manufacturer's data sheets on each product to be used.

1.4 DELIVERY, STORAGE, AND HANDLING

A. Store products in manufacturer's unopened packaging until ready for installation.

B. Store products under cover and elevated above grade.

PART 2 PRODUCTS

2.1 ROOF HATCHES

A. Manufacturers - Roof Hatches:
   1. Acudor Products Inc: www.acudor.com.
   2. Babcock-Davis: www.babcockdavis.com.
   3. Bilco Co.: www.bilco.com
   4. Dur-Red Products: www.dur-red.com.

B. Roof Hatch Assembly Requirements:
   1. Design Wind Speed: See Structural Drawings. Loading shown on Structural Drawings.

C. Roof Hatches: Factory-assembled aluminum frame and cover, complete with operating and release hardware.
   1. Style: Provide flat metal covers unless otherwise indicated.
   2. For Stair Access: Single leaf; 37 by 96 inches.
   3. For Ladder Access: Single leaf: 30 by 36 inches.

D. Frames/Curbs: One-piece curb and frame with integral cap flashing to receive roof flashings; extended bottom flange to suit mounting.
   1. Material: Mill finished aluminum, 11-gauge, 0.0907 inch thick.
   2. Insulation: 1 inch rigid glass fiber, located on outside face of curb.
   3. Curb Height: 12 inches from surface of roof deck, minimum.

E. Metal Covers: Flush, insulated, hollow metal construction.
   1. Capable of supporting 40 psf live load.
   2. Material: Mill finished aluminum; outer cover 11 gage, 0.0907 inch thick, liner 0.04 inch thick.
   3. Insulation: 1 inch rigid glass fiber.
   4. Gasket: Neoprene, continuous around cover perimeter.

F. Safety Railing System: Manufacturer's standard accessory safety rail system mounted directly to curb.
   1. Comply with OSHA 29 CFR 1910.23, with a safety factor of two.

2. Posts and Rails: Fiberglass reinforced polymer.
3. Gate: Same material as railing; automatic closing with latch.
4. Finish: Manufacturer's standard; molded in integral safety yellow.
5. Gate Hinges and Post Guides: ASTM B221 (ASTM B221M), 6063 alloy, T5 temper aluminum.
6. Mounting Brackets: Hot dipped galvanized steel, 1/4 inch thick, minimum.
7. Fasteners: Type 316 stainless steel.

G. Hardware: Steel, zinc coated and chromate sealed, unless otherwise indicated or required by manufacturer.
1. Lifting Mechanisms: Compression or torsion spring operator with shock absorbers that automatically opens upon release of latch; capable of lifting covers despite 10 psf load.
2. Hinges: Heavy duty pintle type.
3. Hold open arm with vinyl-coated handle for manual release.
4. Latch: Upon closing, engage latch automatically and reset manual release.
5. Locking: Padlock hasp on interior.

2.2 LADDER UP SAFETY POST

A. Safety post shall be equal to LadderUP® safety post Model LU-1 as manufactured by The Bilco Company. Device shall be steel with black enamel finish. It shall be designed with a telescoping tubular section that locks automatically when fully extended. Upward and downward movement shall be controlled by a stainless steel spring balancing mechanism.

B. Install on fixed ladder below hatch cover. Unit shall be completely assembled with fasteners for securing to the ladder rungs in accordance with the manufacturer’s instructions.

PART 3 EXECUTION

3.1 INSTALLATION

A. Install in accordance with manufacturer's instructions, in manner that maintains roofing weather integrity.

B. Apply bituminous paint on surfaces of units in contact with cementitious materials or dissimilar metals.

C. Adjust hinges for smooth operation.

D. Secure telescoping safety post to top two rungs of access ladder.

END OF SECTION 07 72 00

SECTION 07 92 00 - JOINT SEALANTS

PART 1 - GENERAL

1.01 RELATED DOCUMENTS

A. The Contractor, Subcontractors, and/or suppliers providing goods or services referenced in or related to this Section shall also be bound by the Documents identified in Division 01 Section "Summary of Work."

1.02 SUMMARY

A. Section Includes:

1. Silicone joint sealants.
2. Urethane joint sealants.
3. Latex joint sealants.
4. Acoustical joint sealants.

B. Related Sections include the following:

1. Division 04 Section "Unit Masonry" for masonry control and expansion joint fillers and gaskets.
2. Division 08 Section "Glazing" for glazing sealants.
3. Division 09 Section "Tiling" for sealing tile joints.
4. Division 09 Section "Acoustical Panel Ceilings" for sealing edge moldings at perimeters of acoustical ceilings.

1.03 PRECONSTRUCTION TESTING

A. Preconstruction Compatibility and Adhesion Testing: Submit to joint-sealant manufacturers, for testing indicated below, samples of materials that will contact or affect joint sealants.

1. Use ASTM C 1087 to determine whether priming and other specific joint preparation techniques are required to obtain rapid, optimum adhesion of joint sealants to joint substrates.
2. Submit not fewer than eight pieces of each type of material, including joint substrates, shims, joint-sealant backings, secondary seals, and miscellaneous materials.
3. Schedule sufficient time for testing and analyzing results to prevent delaying the Work.
4. For materials failing tests, obtain joint-sealant manufacturer's written instructions for corrective measures including use of specially formulated primers.
5. Testing will not be required if joint-sealant manufacturers submit joint preparation data that are based on previous testing of current sealant products for adhesion to, and compatibility with, joint substrates and other materials matching those submitted.

1.04 PERFORMANCE REQUIREMENTS

A. Provide elastomeric joint sealants that establish and maintain watertight and airtight continuous joint seals without staining or deteriorating joint substrates.

B. Provide joint sealants for interior applications that establish and maintain airtight and water-resistant continuous joint seals without staining or deteriorating joint substrates.

1.05 ACTION SUBMITTALS

A. Product Data: For each joint-sealant product indicated.

B. Samples for Initial Selection: Manufacturer's color charts consisting of strips of cured sealants showing the full range of colors available for each product exposed to view.

C. Samples for Verification: For each type and color of joint sealant required, provide Samples with joint sealants in 1/2-inch- wide joints formed between two 6-inch- long strips of material matching the appearance of exposed surfaces adjacent to joint sealants.

D. Joint-Sealant Schedule: Include the following information:

1. Joint-sealant application, joint location, and designation.
2. Joint-sealant manufacturer and product name.
3. Joint-sealant formulation.
4. Joint-sealant color.

1.06 INFORMATIONAL SUBMITTALS

A. Product Certificates: For each type of joint sealant and accessory, signed by product manufacturer.

B. Qualification Data: For Installer.

C. Compatibility and Adhesion Test Reports: From sealant manufacturer, indicating the following:

1. Materials forming joint substrates and joint-sealant backings have been tested for compatibility and adhesion with joint sealants.
2. Interpretation of test results and written recommendations for primers and substrate preparation needed for adhesion.

D. Product Test Reports: Based on comprehensive testing of product formulations performed by a qualified testing agency, indicating that sealants comply with requirements.

E. Preconstruction Compatibility and Adhesion Test Reports: From sealant manufacturer, indicating the following:

1. Materials forming joint substrates and joint-sealant backings have been tested for compatibility and adhesion with joint sealants.
2. Interpretation of test results and written recommendations for primers and substrate preparation needed for adhesion.

F. Warranties: Special warranties specified in this Section.

1.07 QUALITY ASSURANCE

A. Installer Qualifications: Manufacturer's authorized Installer who is approved or licensed for installation of elastomeric sealants required for this Project.

B. Source Limitations: Obtain each type of joint sealant through one source from a single manufacturer.

C. Product Testing: Test joint sealants using a qualified testing agency.

1. Testing Agency Qualifications: An independent testing agency qualified according to ASTM C 1021 to conduct the testing indicated.
2. Test according to SWRI's Sealant Validation Program for compliance with requirements specified by reference to ASTM C 920 for adhesion and cohesion under cyclic movement, adhesion-in-peel, and indentation hardness.

D. Mockups: Build mockups incorporating sealant joints, as follows, to verify selections made under sample submittals and to demonstrate aesthetic effects and set quality standards for materials and execution:

1. Joints in mockups of assemblies specified in other Sections that are indicated to receive elastomeric joint sealants, which are specified by reference to this Section.
2. Each type of sealant and joint substrate indicated.

E. Preinstallation Conference: Conduct conference at Project site to comply with requirements in Division 01 Section "Project Management and Coordination."

1.08 PROJECT CONDITIONS

A. Do not proceed with installation of joint sealants under the following conditions:

1. When ambient and substrate temperature conditions are outside limits permitted by joint- sealant manufacturer or are below 40 deg F.
2. When joint substrates are wet.
3. Where joint widths are less than those allowed by joint-sealant manufacturer for applications indicated.
4. Contaminants capable of interfering with adhesion have not yet been removed from joint substrates.

1.09 WARRANTY

A. Special Installer's Warranty: Installer's standard form in which Installer agrees to repair or replace elastomeric joint sealants that do not comply with performance and other requirements specified in this Section within specified warranty period.

1. Warranty Period: Two years from date of Substantial Completion.

B. Special Manufacturer's Warranty: Manufacturer's standard form in which elastomeric sealant manufacturer agrees to furnish elastomeric joint sealants to repair or replace those that do not comply with performance and other requirements specified in this Section within specified warranty period.

1. Warranty Period: Five years from date of Substantial Completion.

C. Special warranties specified in this Article exclude deterioration or failure of elastomeric joint sealants from the following:

1. Movement of the structure resulting in stresses on the sealant exceeding sealant manufacturer's written specifications for sealant elongation and compression caused by structural settlement or errors attributable to design or construction.
2. Disintegration of joint substrates from natural causes exceeding design specifications.
3. Mechanical damage caused by individuals, tools, or other outside agents.
4. Changes in sealant appearance caused by accumulation of dirt or other atmospheric contaminants.

PART 2 - PRODUCTS

2.01 MATERIALS, GENERAL

A. Compatibility: Provide joint sealants, backings, and other related materials that are compatible with one another and with joint substrates under conditions of service and application, as demonstrated by joint-sealant manufacturer, based on testing and field experience.

B. VOC Content of Interior Sealants: Provide sealants and sealant primers for use inside the weatherproofing system that comply with the following limits for VOC content when calculated according to 40 CFR 59, Part 59, Subpart D (EPA Method 24):

1. Architectural Sealants: 250 g/L.
2. Sealant Primers for Nonporous Substrates: 250 g/L.
3. Sealant Primers for Porous Substrates: 775 g/L.

C. Liquid-Applied Joint Sealants: Comply with ASTM C 920 and other requirements indicated for each liquid-applied joint sealant specified, including those referencing ASTM C 920 classifications for type, grade, class, and uses related to exposure and joint substrates.

D. Stain-Test-Response Characteristics: Where sealants are specified to be nonstaining to porous substrates, provide products that have undergone testing according to ASTM C 1248 and have not stained porous joint substrates indicated for Project.

E. Suitability for Contact with Food: Where sealants are indicated for joints that will come in repeated contact with food, provide products that comply with 21 CFR 177.2600.

F. Colors of Exposed Joint Sealants: As selected by Architect from manufacturer's full range.

2.02 SILICONE JOINT SEALANTS

A. Mildew Resistant, Single-Component, Nonsag, Acid-Curing Silicone Joint Sealant: ASTM C 920, Type S, Grade NS, Class 25, for Use NT.

1. Products: Subject to compliance with requirements, provide one of the following:

a. Dow Corning Corporation; 786 Mildew Resistant.
b. GE Silicones; Sanitary SCS1700.
c. Tremco; Tremsil 200 Sanitary.

2.03 URETHANE JOINT SEALANTS

A. Multicomponent, Nonsag, Urethane Joint Sealant: ASTM C 920, Type M, Grade NS, Class 50, for Use NT.

1. Products: Subject to compliance with requirements, provide one of the following:

a. BASF Corporation-Construction Systems; MasterSeal NP 2 (formerly Sonolastic NP2).
c. Pecora Corporation; Dynatrol II.
d. Sherwin Williams; Loxon 2K NS.
e. Tremco; Dymeric 240 FC.

B. Multicomponent, Pourable, Traffic-Grade, Urethane Joint Sealant: ASTM C 920. Type M, Grade P, Class 25, for Use T and I.

1. Products: Subject to compliance with requirements, provide one of the following:

a. BASF Corporation-Construction Systems; MasterSeal SL 2 (formerly Sonolastic SL2).
b. Pecora Corporation; Dynatrol II-SG.
c. Sherwin Williams; Loxon 2K SL.
d. Tremco; THC-900.

2.04 LATEX JOINT SEALANTS

A. Acrylic Latex: Acrylic latex or siliconized acrylic latex, ASTM C 834, Type OP, Grade NF.

1. Products: Subject to compliance with requirements, provide one of the following:

a. American Sealants, Inc.; ASI 174.
b. Pecora Corporation; AC-20+.
c. Sherwin Williams; 950A.
d. Tremco; Tremflex 834.

2.05 ACOUSTICAL JOINT SEALANTS

A. Acoustical Sealant for Exposed and Concealed Joints: Manufacturer's standard nonsag, paintable, nonstaining latex sealant complying with ASTM C 834 and the following:

1. Product effectively reduces airborne sound transmission through perimeter joints and openings in building construction as demonstrated by testing representative assemblies according to ASTM E 90.
2. Products: Subject to compliance with requirements, provide one of the following:

a. Green Glue; Green Glue Noiseproofing Sealant.
b. Pecora Corporation; AC-20 FTR Acoustical and Insulation Sealant.
c. Sherwin Williams; 950A.
d. United States Gypsum Co.; SHEETROCK Acoustical Sealant.

2.06 JOINT-SEALANT BACKING

A. General: Provide sealant backings of material and type that are nonstaining; are compatible with joint substrates, sealants, primers, and other joint fillers; and are approved for applications indicated by sealant manufacturer based on field experience and laboratory testing.

B. Cylindrical Sealant Backings: ASTM C 1330, Type C (closed-cell material with a surface skin) as approved in writing by joint-sealant manufacturer for joint application indicated, and of size and density to control sealant depth and otherwise contribute to producing optimum sealant performance.

C. Bond-Breaker Tape: Polyethylene tape or other plastic tape recommended by sealant manufacturer for preventing sealant from adhering to rigid, inflexible joint-filler materials or joint surfaces at back of joint where such adhesion would result in sealant failure. Provide self-adhesive tape where applicable.

2.07 MISCELLANEOUS MATERIALS

A. Primer: Material recommended by joint-sealant manufacturer where required for adhesion of sealant to joint substrates indicated, as determined from preconstruction joint-sealant-substrate tests and field tests.

B. Cleaners for Nonporous Surfaces: Chemical cleaners acceptable to manufacturers of sealants and sealant backing materials, free of oily residues or other substances capable of staining or harming joint substrates and adjacent nonporous surfaces in any way, and formulated to promote optimum adhesion of sealants to joint substrates.

C. Masking Tape: Nonstaining, nonabsorbent material compatible with joint sealants and surfaces adjacent to joints.

PART 3 - EXECUTION

3.01 EXAMINATION

A. Examine joints indicated to receive joint sealants, with Installer present, for compliance with requirements for joint configuration, installation tolerances, and other conditions affecting joint-sealant performance.

B. Proceed with installation only after unsatisfactory conditions have been corrected.

3.02 PREPARATION

A. Surface Cleaning of Joints: Clean out joints immediately before installing joint sealants to comply with joint-sealant manufacturer's written instructions and the following requirements:

1. Remove all foreign material from joint substrates that could interfere with adhesion of joint sealant, including dust, paints (except for permanent, protective coatings tested and approved for sealant adhesion and compatibility by sealant manufacturer), old joint sealants, oil, grease, waterproofing, water repellents, water, surface dirt, and frost.

2. Clean porous joint substrate surfaces by brushing, grinding, blast cleaning, mechanical abrading, or a combination of these methods to produce a clean, sound substrate capable of developing optimum bond with joint sealants. Remove loose particles remaining after cleaning operations above by vacuuming or blowing out joints with oil-free compressed air. Porous joint substrates include the following:

    a. Concrete.
    b. Masonry.
    c. Unglazed surfaces of ceramic tile.

3. Remove laitance and form-release agents from concrete.
4. Clean nonporous surfaces with chemical cleaners or other means that do not stain, harm substrates, or leave residues capable of interfering with adhesion of joint sealants. Nonporous joint substrates include the following:

    a. Metal.
    b. Glass.
    c. Porcelain enamel.
    d. Glazed surfaces of ceramic tile.

B. Joint Priming: Prime joint substrates, where recommended in writing by joint-sealant manufacturer, based on preconstruction joint-sealant-substrate tests or prior experience. Apply primer to comply with joint-sealant manufacturer's written instructions. Confine primers to areas of joint-sealant bond; do not allow spillage or migration onto adjoining surfaces.

C. Masking Tape: Use masking tape where required to prevent contact of sealant with adjoining surfaces that otherwise would be permanently stained or damaged by such contact or by cleaning methods required to remove sealant smears. Remove tape immediately after tooling without disturbing joint seal.

3.03 INSTALLATION OF JOINT SEALANTS

A. General: Comply with joint-sealant manufacturer's written installation instructions for products and applications indicated, unless more stringent requirements apply.

B. Sealant Installation Standard: Comply with recommendations in ASTM C 1193 for use of joint sealants as applicable to materials, applications, and conditions indicated.

C. Install sealant backings of type indicated to support sealants during application and at position required to produce cross-sectional shapes and depths of installed sealants relative to joint widths that allow optimum sealant movement capability.

    1. Do not leave gaps between ends of sealant backings.
    2. Do not stretch, twist, puncture, or tear sealant backings.
    3. Remove absorbent sealant backings that have become wet before sealant application and replace them with dry materials.

D. Install bond-breaker tape behind sealants where sealant backings are not used between sealants and backs of joints.

E. Install sealants using proven techniques that comply with the following and at the same time backings are installed:

    1. Place sealants so they directly contact and fully wet joint substrates.

2. Completely fill recesses in each joint configuration.
3. Produce uniform, cross-sectional shapes and depths relative to joint widths that allow optimum sealant movement capability.

F. Tooling of Nonsag Sealants: Immediately after sealant application and before skinning or curing begins, tool sealants according to requirements specified below to form smooth, uniform beads of configuration indicated; to eliminate air pockets; and to ensure contact and adhesion of sealant with sides of joint.

1. Remove excess sealant from surfaces adjacent to joints.
2. Use tooling agents that are approved in writing by sealant manufacturer and that do not discolor sealants or adjacent surfaces.
3. Provide concave joint configuration per Figure 5A in ASTM C 1193, unless otherwise indicated.

G. Acoustical Sealant Installation: At sound-rated assemblies and elsewhere as indicated, seal construction at perimeters, behind control joints, and at openings and penetrations with a continuous bead of acoustical sealant. Install acoustical sealant at both faces of partitions at perimeters and through penetrations. Comply with ASTM C 919 and with manufacturer's written recommendations.

3.04 CLEANING

A. Clean off excess sealant or sealant smears adjacent to joints as the Work progresses by methods and with cleaning materials approved in writing by manufacturers of joint sealants and of products in which joints occur.

3.05 PROTECTION

A. Protect joint sealants during and after curing period from contact with contaminating substances and from damage resulting from construction operations or other causes so sealants are without deterioration or damage at time of Substantial Completion. If, despite such protection, damage or deterioration occurs, cut out and remove damaged or deteriorated joint sealants immediately so installations with repaired areas are indistinguishable from original work.

3.06 JOINT-SEALANT SCHEDULE

A. Joint-Sealant Application: Exterior joints in vertical surfaces and horizontal nontraffic surfaces.

1. Joint Locations:

a. Construction joints in cast-in-place concrete.
b. Control and expansion joints in unit masonry.
c. Joints between metal panels.
d. Joints between different materials listed above.
e. Perimeter joints between materials listed above and frames of doors, windows and louvers.
f. Control and expansion joints in ceilings and other overhead surfaces.
g. Other joints as indicated.

2. Urethane Joint Sealant: Multicomponent, nonsag, Class 50.

3. Joint-Sealant Color: As selected by Architect from manufacturer's full range of colors, for each material.

B. Joint-Sealant Application: Interior joints in horizontal traffic surfaces.

1. Joint Locations:

a. Isolation joints in cast-in-place concrete slabs.
b. Penetrations in cast-in-place concrete slabs on grade.
c. Control and expansion joints in tile flooring.
d. Other joints as indicated.

2. Urethane Joint Sealant: Multicomponent, pourable, traffic grade, Class 25.
3. Joint-Sealant Color: As selected by Architect from manufacturer's full range of colors, for each material.

C. Joint-Sealant Application: Interior joints in all other vertical surfaces and horizontal nontraffic surfaces.

1. Joint Locations:

a. Control and expansion joints on exposed interior surfaces of exterior walls.
b. Perimeter joints of exterior openings where indicated.
c. Tile control and expansion joints.
d. Vertical joints on exposed surfaces of interior unit masonry walls and partitions.
e. Perimeter joints between interior wall surfaces and frames of interior doors, and windows.
f. Other joints as indicated.

2. Joint Sealant: Latex.
3. Joint-Sealant Color: As selected by Architect from manufacturer's full range of colors.

D. Joint-Sealant Application: Mildew-resistant interior joints in vertical surfaces and horizontal nontraffic surfaces.

1. Joint Sealant Location:

a. Joints between plumbing fixtures and adjoining walls, floors, and counters.
b. Other joints as indicated.

2. Joint Sealant: Single component, nonsag, mildew resistant, acid curing silicone.
3. Joint-Sealant Color: White.

E. Joint-Sealant Application: Mildew-resistant interior joints in vertical surfaces and horizontal nontraffic surfaces at counters and backsplashes.

1. Joint Sealant Location:

a. Joints between counters and walls.
b. Joints between backsplashes and walls.
c. Joints between counters and backsplashes.
d. Other joints as indicated.

2. Joint Sealant: Single component, non-sag, mildew resistant, acid curing silicone.
3. Joint-Sealant Color: Clear.

F. Joint-Sealant Application: Interior acoustical joints in vertical surfaces and horizontal nontraffic surfaces.

1. Joint Location:

a. Acoustical joints where indicated.
b. Other joints as indicated.

2. Joint Sealant: Acoustical.
3. Joint-Sealant Color: As selected by Architect from manufacturer's full range.

END OF SECTION 07 92 00

DIVISION 08

SECTION 08 11 13 - HOLLOW METAL DOORS AND FRAMES

PART 1 - GENERAL

1.01 RELATED DOCUMENTS

A. The Contractor, Subcontractors, and/or suppliers providing goods or services referenced in or related to this Section shall also be bound by the Documents identified in Division 01 Section “Summary of Work.”

1.02 SUMMARY

A. Section includes hollow-metal work.

B. Related Requirements:

1. Division 04 Section "Unit Masonry" for building anchors into and grouting hollow metal frames in masonry construction.
2. Division 08 Section "Door Hardware" for door hardware for hollow metal doors.
3. Division 08 Section "Glazing" for glazed lites in hollow metal doors and frames.
4. Division 09 Section “Painting” for field painting hollow metal doors and frames.

1.03 DEFINITIONS

A. Minimum Thickness: Minimum thickness of base metal without coatings according to NAAMM- HMMA 803 or SDI A250.8.

1.04 COORDINATION

A. Coordinate anchorage installation for hollow-metal frames. Furnish setting drawings, templates, and directions for installing anchorages, including sleeves, concrete inserts, anchor bolts, and items with integral anchors. Deliver such items to Project site in time for installation.

1.05 PREINSTALLATION MEETINGS

A. Preinstallation Conference: Conduct conference at Project site.

1. Meet with Architect, electrical contractor, security systems supplier, and hardware installers whose work interfaces with or affects hollow metal doors and frames.
2. Review requirements for type of cut-out and back-box as part of the door and frame assembly.
3. Document proceedings, including receipt of samples and approved shop drawings of security contact devices which accurately represent the installation of the device, back-box, and conduit terminations required.
4. Distribute an installation book, including all manuals and instructions.

1.06 ACTION SUBMITTALS

A. Product Data: For each type of product.

1. Include construction details, material descriptions, core descriptions, fire-resistance ratings, and finishes.

B. Shop Drawings: Include the following:

1. Elevations of each door type.
2. Details of doors, including vertical- and horizontal-edge details and metal thicknesses.
3. Frame details for each frame type, including dimensioned profiles and metal thicknesses.
4. Locations of reinforcement and preparations for hardware.
5. Details of each different wall opening condition.
6. Details of anchorages, joints, field splices, and connections.
7. Details of accessories.
8. Details of moldings, removable stops, and glazing.
9. Details of conduit and preparations for power, signal, and control systems.

C. Schedule: Provide a schedule of hollow-metal work prepared by or under the supervision of supplier, using same reference numbers for details and openings as those on Drawings. Coordinate with final Door Hardware Schedule.

1.07 INFORMATIONAL SUBMITTALS

A. Product Test Reports: For each type of hollow-metal door and frame assembly, for tests performed by a qualified testing agency.

B. Recycled, Recyclable, Bio-based and/or Indigenous Content

1. Not less than 65 percent of the total building materials used in the project shall comply with the Products Requirements in Section 08113

2. Measurement of percentage may be based on mass, volume or cost, but measurement must be consistent across all materials

3. Documentation of the portion that each component, or assemble contributes to the total percentage shall be submitted to Architect & Owner as noted in Section 08113

1.08 PROJECT CONDITIONS

A. Field Measurements: Verify actual dimensions of openings by field measurements before fabrication.

1.09 DELIVERY, STORAGE, AND HANDLING

A. Deliver hollow-metal work palletized, packaged, or crated to provide protection during transit and Project-site storage. Do not use nonvented plastic.

1. Provide additional protection to prevent damage to factory-finished units.

B. Deliver welded frames with two removable spreader bars across bottom of frames, tack welded to jambs and mullions.

C. Store hollow-metal work vertically under cover at Project site with head up. Place on minimum 4-inch-high wood blocking. Provide minimum 1/4-inch space between each stacked door to permit air circulation.

PART 2 - PRODUCTS

2.01 MANUFACTURERS

A. Manufacturers: Subject to compliance with requirements, provide products by one of the following:

1. Ceco Door; ASSA ABLOY.
2. Curries Company; ASSA ABLOY.
3. DE LA FONTAINE.
4. Steelcraft; an Allegion brand.

B. Source Limitations: Obtain hollow-metal work from single source from single manufacturer.

2.02 INTERIOR DOORS AND FRAMES

A. Construct interior doors and frames to comply with the standards indicated for materials, fabrication, hardware locations, hardware reinforcement, tolerances, and clearances, and as specified.

B. Heavy-Duty Doors and Frames: SDI A250.8, Level 2.

1. Physical Performance: Level B according to SDI A250.4.
2. Doors:

a. Type: As indicated in the Door and Frame Schedule.
b. Thickness: 1-3/4 inches.
c. Face: Uncoated, cold-rolled steel sheet, minimum thickness of 0.042 inch (18 gauge).

1) Provide 16 gauge face sheets for doors over 3’-0” wide.

d. Edge Construction: Model 2, Seamless.
e. Core: Vertical steel stiffener with fiberglass insulation.

3. Frames:

a. Materials: Uncoated steel sheet, minimum thickness of 0.053 inch (16 gauge).
b. Construction: Face welded.

4. Exposed Finish: Prime.

2.03 EXTERIOR HOLLOW-METAL DOORS AND FRAMES

A. Construct exterior doors and frames to comply with the standards indicated for materials, fabrication, hardware locations, hardware reinforcement, tolerances, and clearances, and as specified.

B. Extra-Heavy-Duty Doors and Frames: SDI A250.8, Level 3.

1. Physical Performance: Level A according to SDI A250.4.
   a. Doors: Type: As indicated in the Door and Frame Schedule.
   b. Thickness: 1-3/4 inches
   c. Face: Metallic-coated steel sheet, minimum thickness of 0.053 inch (16 gauge), with minimum A60 coating.
   d. Edge Construction: Model 2, Seamless.
   e. Core: Polyurethane.
      1) Thermal-Rated Doors: Provide doors fabricated with an average U-factor of not more than **0.37** Btu/sq. ft. x h x deg F (R-value of 2.7 minimum) when tested according to ASTM C 1363 for operable door assembly.

2. Frames: Provide maximum-duty frames for exterior frames.
   a. Materials: Metallic-coated steel sheet, minimum thickness of 0.067 inch (14 gauge), with minimum A60 coating.
   b. Construction: Face welded.

3. Exposed Finish: Prime.

2.04 BORROWED LITES

A. Hollow-metal frames of uncoated steel sheet, minimum thickness of 0.053 inch (16 gauge).

B. Construction: Face welded.

2.05 FRAME ANCHORS

A. Jamb Anchors:

1. Masonry Type: Adjustable strap-and-stirrup or T-shaped anchors to suit frame size, not less than 0.042 inch thick, with corrugated or perforated straps not less than 2 inches wide by 10 inches long; or wire anchors not less than 0.177 inch thick.
2. Postinstalled Expansion Type for In-Place Concrete or Masonry: Minimum 3/8-inch-diameter bolts with expansion shields or inserts. Provide pipe spacer from frame to wall, with throat reinforcement plate, welded to frame at each anchor location.

B. Floor Anchors: Formed from same material as frames, minimum thickness of 0.042 inch, and as follows:

1. Monolithic Concrete Slabs: Clip-type anchors, with two holes to receive fasteners.

2.06 MATERIALS

A. Cold-Rolled Steel Sheet: ASTM A 1008/A 1008M, Commercial Steel (CS), Type B; suitable for exposed applications.

B. Metallic-Coated Steel Sheet: ASTM A 653/A 653M, Commercial Steel (CS), Type B, with minimum A60 metallic coating.

C. Frame Anchors: ASTM A 879/A 879M, Commercial Steel (CS), 04Z coating designation; mill phosphatized.

1. For anchors built into exterior walls, steel sheet complying with ASTM A 1008/A 1008M or ASTM A 1011/A 1011M, hot-dip galvanized according to ASTM A 153/A 153M, Class B.

D. Inserts, Bolts, and Fasteners: Hot-dip galvanized according to ASTM A 153/A 153M.

E. Power-Actuated Fasteners in Concrete: Fastener system of type suitable for application indicated, fabricated from corrosion-resistant materials, with clips or other accessory devices for attaching hollow-metal frames of type indicated.

F. Grout: ASTM C 476, except with a maximum slump of 4 inches, as measured according to ASTM C 143/C 143M. Comply with Division 04 Section “Unit Masonry.”

G. Glazing: Comply with Division 08 Section "Glazing."

H. Bituminous Coating: Cold-applied asphalt mastic, compounded for 15-mil dry film thickness per coat. Provide inert-type noncorrosive compound free of asbestos fibers, sulfur components, and other deleterious impurities.

2.07 FABRICATION

A. Fabricate hollow-metal work to be rigid and free of defects, warp, or buckle. Accurately form metal to required sizes and profiles, with minimum radius for metal thickness. Where practical, fit and assemble units in manufacturer's plant. To ensure proper assembly at Project site, clearly identify work that cannot be permanently factory assembled before shipment.

B. Hollow-Metal Doors:

1. Steel-Stiffened Door Cores: Provide minimum thickness 0.026 inch, steel vertical stiffeners of same material as face sheets extending full-door height, with vertical webs spaced not more than 6 inches apart. Spot weld to face sheets no more than 5 inches o.c. Fill spaces between stiffeners with glass- or mineral-fiber insulation.
2. Vertical Edges for Single-Acting Doors: Bevel edges 1/8 inch in 2 inches.
3. Top Edge Closures: Close top edges of doors with inverted closures, except provide flush closures at exterior doors of same material as face sheets.
4. Bottom Edge Closures: Close bottom edges of doors where required for attachment of weather stripping with end closures or channels of same material as face sheets.
5. Exterior Doors: Provide weep-hole openings in bottoms of exterior doors to permit moisture to escape. Seal joints in top edges of doors against water penetration.

C. Hollow-Metal Frames: Where frames are fabricated in sections due to shipping or handling limitations, provide alignment plates or angles at each joint, fabricated of same thickness metal as frames.

1. Provide countersunk, flat- or oval-head exposed screws and bolts for exposed fasteners

unless otherwise indicated.

2. Grout Guards: Weld guards to frame at back of hardware mortises in frames to be grouted.
3. Floor Anchors: Weld anchors to bottoms of jambs with at least four spot welds per anchor; however, for slip-on drywall frames, provide anchor clips or countersunk holes at bottoms of jambs.
4. Jamb Anchors: Provide number and spacing of anchors as follows:

a. Masonry Type: Locate anchors not more than 16 inches from top and bottom of frame. Space anchors not more than 32 inches o.c., to match coursing, and as follows:

1) Two anchors per jamb up to 60 inches high.
2) Three anchors per jamb from 60 to 90 inches high.
3) Four anchors per jamb from 90 to 120 inches high.

b. Postinstalled Expansion Type: Locate anchors not more than 6 inches from top and bottom of frame. Space anchors not more than 26 inches o.c.

5. Head Anchors: Two anchors per head for frames more than 42 inches wide and mounted in metal-stud partitions.
6. Door Silencers: Except on weather-stripped frames, drill stops to receive door silencers as follows. Keep holes clear during construction.

a. Single-Door Frames: Drill stop in strike jamb to receive three door silencers.
b. Double-Door Frames: Drill stop in head jamb to receive two door silencers.

D. Fabricate concealed stiffeners and edge channels from either cold- or hot-rolled steel sheet.

E. Hardware Preparation: Factory prepare hollow-metal work to receive templated mortised hardware; include cutouts, reinforcement, mortising, drilling, and tapping according to SDI A250.6, the Door Hardware Schedule, and templates.

1. Reinforce doors and frames to receive non-templated, mortised, and surface-mounted door hardware.
2. Comply with applicable requirements in SDI A250.6 and BHMA A156.115 for preparation of hollow-metal work for hardware.
3. Coordinate locations of conduit and wiring boxes for electrical connections with Division 26 Sections.

F. Hardware Reinforcement: Fabricate reinforcement plates from same material as frames to comply with manufacturer's standard gauges and sizes, but not less than the following minimum sizes.

1. Hinges: Minimum 10 gauge by 1-1/2 inches wide by 6 inches longer than hinge, secured by not less than 6 spot welds.
2. Lock Face, Flush and Surface Bolts, Closers, and Concealed Holders: Minimum 14 gauge.
3. Pull Plates and Bar: Minimum 16 gauge.

G. Stops and Moldings: Provide stops and moldings around glazed lites and louvers where indicated. Form corners of stops and moldings with mitered hairline joints.

1. Single Glazed Lites: Provide fixed stops and moldings welded on secure side of hollow- metal work.
2. Multiple Glazed Lites: Provide fixed and removable stops and moldings so that each glazed lite is capable of being removed independently.
3. Provide fixed frame moldings on outside of exterior and on secure side of interior doors and frames.
4. Provide loose stops and moldings on inside of hollow-metal work.
5. Coordinate rabbet width between fixed and removable stops with glazing and installation types indicated.

2.08 STEEL FINISHES

A. Prime Finish: Clean, pretreat, and apply manufacturer's standard primer.

1. Shop Primer: Manufacturer's standard, fast-curing, lead- and chromate-free primer complying with SDI A250.10; recommended by primer manufacturer for substrate; compatible with substrate and field-applied coatings despite prolonged exposure.

2.09 ACCESSORIES

A. Mullions: Join to adjacent members by welding or rigid mechanical anchors.

B. Grout Guards: Formed from same material as frames, not less than 0.016 inch thick.

PART 3 - EXECUTION

3.01 EXAMINATION

A. Examine substrates, areas, and conditions, with Installer present, for compliance with requirements for installation tolerances and other conditions affecting performance of the Work.

B. Examine roughing-in for embedded and built-in anchors to verify actual locations before frame installation.

C. Prepare written report, endorsed by Installer, listing conditions detrimental to performance of the Work.

D. Proceed with installation only after unsatisfactory conditions have been corrected.

3.02 PREPARATION

A. Remove welded-in shipping spreaders installed at factory. Restore exposed finish by grinding, filling, and dressing, as required to make repaired area smooth, flush, and invisible on exposed faces.

B. Drill and tap doors and frames to receive nontemplated, mortised, and surface-mounted door hardware.

3.03 INSTALLATION

A. General: Install hollow-metal work plumb, rigid, properly aligned, and securely fastened in place. Comply with Drawings and manufacturer's written instructions.

B. Hollow-Metal Frames: Install hollow-metal frames for doors, transoms, sidelites, borrowed lites, and other openings, of size and profile indicated. Comply with SDI A250.11 or NAAMM-HMMA 840 as required by standards specified.

1. Set frames accurately in position; plumbed, aligned, and braced securely until permanent anchors are set. After wall construction is complete, remove temporary

braces, leaving surfaces smooth and undamaged.

a. Where frames are fabricated in sections because of shipping or handling limitations, field splice at approved locations by welding face joint continuously; grind, fill, dress, and make splice smooth, flush, and invisible on exposed faces.
b. Install frames with removable stops located on secure side of opening.
c. Install door silencers in frames before grouting.
d. Remove temporary braces necessary for installation only after frames have been properly set and secured.
e. Check plumb, square, and twist of frames as walls are constructed. Shim as necessary to comply with installation tolerances.
f. Field apply bituminous coating to backs of frames that will be filled with grout containing antifreezing agents.

2. Floor Anchors: Provide floor anchors for each jamb and mullion that extends to floor, and secure with postinstalled expansion anchors.

a. Floor anchors may be set with power-actuated fasteners instead of postinstalled expansion anchors if so indicated and approved on Shop Drawings.

3. Metal-Stud Partitions: Solidly pack mineral-fiber insulation inside frames.
4. Masonry Walls: Coordinate installation of frames to allow for solidly filling space between frames and masonry with grout.
5. In-Place Concrete or Masonry Construction: Secure frames in place with postinstalled expansion anchors. Countersink anchors, and fill and make smooth, flush, and invisible on exposed faces.
6. Installation Tolerances: Adjust hollow-metal door frames for squareness, alignment, twist, and plumb to the following tolerances:

a. Squareness: Plus or minus 1/16 inch, measured at door rabbet on a line 90 degrees from jamb perpendicular to frame head.
b. Alignment: Plus or minus 1/16 inch, measured at jambs on a horizontal line parallel to plane of wall.
c. Twist: Plus or minus 1/16 inch, measured at opposite face corners of jambs on parallel lines, and perpendicular to plane of wall.
d. Plumbness: Plus or minus 1/16 inch, measured at jambs at floor.

C. Hollow-Metal Doors: Fit hollow-metal doors accurately in frames, within clearances specified below. Shim as necessary.

1. Non-Fire-Rated Steel Doors:

a. Between Door and Frame Jambs and Head: 1/8 inch plus or minus 1/32 inch.
b. Between Edges of Pairs of Doors: 1/8 inch to 1/4 inch plus or minus 1/32 inch.
c. Between Bottom of Door and Top of Threshold: Maximum 3/8 inch.
d. Between Bottom of Door and Top of Finish Floor (No Threshold): Maximum 3/4 inch.
e. Between Door Face and Stop: 1/16 inch to 1/8 inch plus or minus 1/32 inch.

D. Glazing: Comply with installation requirements in Division 08 Section "Glazing" and with hollow- metal manufacturer's written instructions.

1. Secure stops with countersunk flat- or oval-head machine screws spaced uniformly not more than 9 inches o.c. and not more than 2 inches o.c. from each corner.

3.04 ADJUSTING AND CLEANING

A. Final Adjustments: Check and readjust operating hardware items immediately before final inspection. Leave work in complete and proper operating condition. Remove and replace defective work, including hollow-metal work that is warped, bowed, or otherwise unacceptable.

B. Remove grout and other bonding material from hollow-metal work immediately after installation.

C. Prime-Coat Touchup: Immediately after erection, sand smooth rusted or damaged areas of prime coat and apply touchup of compatible air-drying, rust-inhibitive primer.

D. Metallic-Coated Surface Touchup: Clean abraded areas and repair with galvanizing repair paint according to manufacturer's written instructions.

E. Touchup Painting: Cleaning and touchup painting of abraded areas of paint are specified in Division 09 Section “Painting.”

END OF SECTION 08 11 13

SECTION 08 14 16 - FLUSH WOOD DOORS

PART 1 GENERAL

1.01 SECTION INCLUDES

A. Flush wood doors; flush configuration; non-rated, acoustical, and non-acoustical.

1.02 RELATED REQUIREMENTS

A. Section 081116: Aluminum Doors and Frames.

B. Section 08 7100 - Door Hardware.

C. Section 08 8000 - Glazing.

1.03 REFERENCE STANDARDS

A. AWI/AWMAC/WI (AWS) - Architectural Woodwork Standards; 2014.

B. AWMAC/WI (NAAWS) - North American Architectural Woodwork Standards, U.S. Version 3.0; 2016.

C. NFPA 80 - Standard for Fire Doors and Other Opening Protectives; 2016.

D. UL 10C - Standard for Positive Pressure Fire Tests of Door Assemblies; Current Edition, Including All Revisions.

E. WDMA I.S. 1A - Interior Architectural Wood Flush Doors; 2013.

1.04 SUBMITTALS

A. See Section 01 3000 - Administrative Requirements, for submittal procedures.

B. Product Data: Indicate door core materials and construction; veneer species, type and characteristics.

C. Shop Drawings: Show doors and frames, elevations, sizes, types, swings, undercuts, beveling, blocking for hardware, factory machining, factory finishing, cutouts for glazing and other details.

D. Warranty, executed in Owner's name.

1.05 QUALITY ASSURANCE

A. Manufacturer Qualifications: Company specializing in manufacturing the products specified in this section, with not less than three years of documented experience.

B. Installer Qualifications: Company specializing in performing work of the type specified in this section, with not less than three years of documented experience.

1.06 DELIVERY, STORAGE, AND HANDLING

A. Package, deliver and store doors in accordance with specified quality standard.

B. Accept doors on site in manufacturer's packaging. Inspect for damage.

C. Protect doors with resilient packaging sealed with heat shrunk plastic. Do not store in damp or wet areas; or in areas where sunlight might bleach veneer. Seal top and bottom edges with tinted sealer if stored more than one week. Break seal on site to permit ventilation.

1.07 WARRANTY

A. See Section 01 7800 - Closeout Submittals, for additional warranty requirements.

B. Interior Doors: Provide manufacturer's warranty for the life of the installation.

C. Include coverage for delamination of veneer, warping beyond specified installation tolerances, defective materials, and telegraphing core construction.

PART 2 PRODUCTS

2.01 MANUFACTURERS

A. Wood Veneer Faced Doors:
   1. Graham Wood Doors: www.grahamdoors.com.
   2. The Maiman Company; www.maiman.com.

2.02 DOORS

A. Doors: Refer to drawings for locations and additional requirements.
   1. Quality Standard: Custom Grade, Heavy Duty performance, in accordance with WDMA I.S. 1A.

B. Interior Doors: 1-3/4 inches (44 mm) thick unless otherwise indicated; flush construction.
   1. Provide solid core doors at each location.

2.03 DOOR AND PANEL CORES

A. Sound Resistant Doors: Equivalent to type, with particleboard core (PC) construction with core as required to achieve STC rating specified; plies and faces as indicated above.

2.04 DOOR FACINGS

A. Veneer Facing for Transparent Finish: White oak, veneer grade in accordance with quality standard indicated veneer grade in accordance with quality standard indicated, plain sliced (flat cut)plain sliced (flat cut), with book matchbook match between leaves of veneer, running match running match of spliced veneer leaves assembled on door or panel face.

2.05 DOOR CONSTRUCTION

A. Fabricate doors in accordance with door quality standard specified.

B. Cores Constructed with stiles and rails:
   1. Provide solid blocks at lock edge for hardware reinforcement.
   2. Provide solid blocking for other through bolted hardware.

C. Glazed Openings: Non-removable stops on non-secure side; sizes and configurations as indicated on drawings.

D. Factory machine doors for hardware other than surface-mounted hardware, in accordance with hardware requirements and dimensions.

E. Factory fit doors for frame opening dimensions identified on shop drawings, with edge clearances in accordance with specified quality standard.

F. Provide edge clearances in accordance with the quality standard specified.

2.06 FACTORY FINISHING - WOOD VENEER DOORS

A. Finish work in accordance with AWI/AWMAC/WI (AWS) or AWMAC/WI (NAAWS), Section 5 - Finishing for grade specified and as follows:
   1. Transparent:
      a. System - 12, Polyurethane, Water-based.
      b. Sheen: Semigloss.

B. Finish work in accordance with WDMA I.S. 1A for grade specified and as follows:

C. Seal door top edge with color sealer to match door facing.

2.07 ACCESSORIES

A. Glazing: As specified in Section 08 8000.

B. Glazing Stops: Wood, of same species as door facing, butted corners; prepared for countersink style tamper proof screws.

C. Door Hardware: As specified in Section 08 7100.

PART 3 EXECUTION

3.01 EXAMINATION

A. Verify existing conditions before starting work.

B. Verify that opening sizes and tolerances are acceptable.

C. Do not install doors in frame openings that are not plumb or are out-of-tolerance for size or alignment.

3.02 INSTALLATION

A. Install doors in accordance with manufacturer's instructions and specified quality standard.
   1. Install fire-rated doors in accordance with NFPA 80 requirements.

B. Factory-Finished Doors: Do not field cut or trim; if fit or clearance is not correct, replace door.

C. Use machine tools to cut or drill for hardware.

D. Coordinate installation of doors with installation of frames and hardware.

E. Coordinate installation of glazing.

3.03 TOLERANCES

A. Conform to specified quality standard for fit and clearance tolerances.

B. Conform to specified quality standard for telegraphing, warp, and squareness.

3.04 ADJUSTING

A. Adjust doors for smooth and balanced door movement.

B. Adjust closers for full closure.

3.05 SCHEDULE

A. Refer to Door and Frame Schedule on drawings.

END OF SECTION 08 14 16

SECTION 08 31 13 - ACCESS DOORS AND FRAMES

PART 1 - GENERAL

1.01 RELATED DOCUMENTS

A. The Contractor, Subcontractors, and/or suppliers providing goods or services referenced in or related to this Section shall also be bound by the Documents identified in Division 01 Section "Summary of Work."

1.02 SUMMARY

A. This Section includes the following:

1. Access doors and frames for walls and ceilings.

B. Related Sections include the following:

1. Division 04 Section "Unit Masonry" for anchoring and grouting access door frames in masonry construction.
2. Division 09 Section "Painting" for field finishing factory-primed access doors and frames.
3. Division 23 Section for heating and air-conditioning duct access doors.

1.03 SUBMITTALS

A. Product Data: For each type of access door and frame indicated. Include construction details, fire ratings, materials, individual components and profiles, and finishes.

B. Shop Drawings: Show fabrication and installation details of access doors and frames for each type of substrate. Include plans, elevations, sections, details, and attachments to other work.

C. Samples: For each door face material, at least 3 by 5 inches in size, in specified finish.

D. Access Door and Frame Schedule: Provide complete access door and frame schedule, including types, locations, sizes, latching or locking provisions, and other data pertinent to installation.

1.04 QUALITY ASSURANCE

A. Size Variations: Obtain Architect's acceptance of manufacturer's standard-size units, which may vary slightly from sizes indicated.

1.05 COORDINATION

A. Verification: Determine specific locations and sizes for access doors needed to gain access to concealed plumbing, mechanical, or other concealed work, and indicate in the schedule specified in "Submittals" Article.

PART 2 - PRODUCTS

2.01 ACCESS DOORS AND FRAMES FOR WALLS AND CEILINGS

A. Source Limitations: Obtain access doors and frames through one source from a single manufacturer.

B. Basis of Design Product: Subject to compliance with requirements, provide product indicated, or comparable product by one of the following:

1. J. L. Industries, Inc.
2. Karp Associates, Inc.
3. Larsen's Manufacturing Company.
4. Milcor Inc.
5. Nystrom, Inc.

A. Manufacturers:
1. ACUDOR Products Inc: www.acudor.com/#sle.
   a. Air-Tight, Water-Tight, Wall and Ceiling Mounted Units: ACUDOR ADWT.
   b. Wall and Ceiling Mounted Units: ACUDOR DW-5058.
2. Cendrex, Inc: www.cendrex.com/#sle.
   a. Concealed Flange and Latch Units: Cendrex CTR-MAG.
   b. Ceiling Mounted Units: Cendrex GFRG-PUR, with push up radius corners.
3. Williams Brothers Corporation of America: www.wbdoors.com/#sle.
   a. Tape-In Drywall Bead Flange Flush Access Door: WB DW 400 Series.
   b. Glass-Fiber-Reinforced Gypsum (GFRG) Ceiling Access Panel: WB GY 3000 Series.

C. Flush Access Doors with Exposed Flanges:

1. **Basis-of-Design Product: Babcock Davis; Model BNT.**
2. Assembly Description: Fabricate door to fit flush to frame. Provide manufacturer's standard-width exposed flange, proportional to door size.
3. Locations: Wall and ceiling, gypsum board and masonry walls.
4. Uncoated Steel Sheet for Door: Nominal 14 gage.

   a. Finish: Factory prime.

5. Frame Material: Nominal 16 gauge, factory prime.
6. Hinges: concealed pivoting rod hinge.
7. Door Size: 12x12.

D. Flush Access Doors with Exposed Flanges:

1. **Basis-of-Design Product: Babcock Davis; Model BNT.**
2. Assembly Description: Fabricate door to fit flush to frame. Provide manufacturer's standard-width exposed flange, proportional to door size.
3. Locations: Wall, masonry with ceramic tile finish.
4. Stainless-Steel Sheet for Door: Nominal 14 gage.

    a. Finish: No. 4.

5. Frame Material: Nominal 16 gauge, stainless steel.
6. Hinges: concealed pivoting rod hinge.
7. Door Size: 12x12.

E. Hardware:

1. Latch: Cam latch operated by screwdriver.

2.02 MATERIALS

A. Steel Sheet: Uncoated cold-rolled steel sheet substrate complying with ASTM A 1008/A 1008M, Commercial Steel (CS), exposed.

B. Stainless-Steel Sheet, Strip, Plate, and Flat Bars: ASTM A 666, Type 304. Remove tool and die marks and stretch lines or blend into finish.

C. Drywall Beads: Edge trim formed from 0.0299-inch zinc-coated steel sheet formed to receive joint compound and in size to suit thickness of gypsum board.

2.03 FABRICATION

A. General: Provide access door and frame assemblies manufactured as integral units ready for installation.

B. Metal Surfaces: For metal surfaces exposed to view in the completed Work, provide materials with smooth, flat surfaces without blemishes. Do not use materials with exposed pitting, seam marks, roller marks, rolled trade names, or roughness.

C. Doors and Frames: Grind exposed welds smooth and flush with adjacent surfaces. Furnish attachment devices and fasteners of type required to secure access panels to types of supports indicated.

1. Exposed Flanges: As indicated.
2. Provide mounting holes in frames for attachment of units to metal framing.

D. Latching Mechanisms: Furnish number required to hold doors in flush, smooth plane when closed.

2.04 FINISHES

A. Comply with NAAMM's "Metal Finishes Manual for Architectural and Metal Products" for recommendations for applying and designating finishes.

B. Protect mechanical finishes on exposed surfaces from damage by applying a strippable, temporary protective covering before shipping.

C. Appearance of Finished Work: Noticeable variations in same piece are not acceptable. Variations in appearance of adjoining components are acceptable if they are within the range of approved Samples and are assembled or installed to minimize contrast.

D. Steel and Metallic-Coated-Steel Finishes:

1. Factory Prime: Apply manufacturer's standard, fast-curing, lead- and chromate-free, universal primer immediately after surface preparation and pretreatment.

E. Stainless-Steel Finishes:

1. Surface Preparation: Remove tool and die marks and stretch lines, or blend into finish.
2. Polished Finishes: Grind and polish surfaces to produce uniform finish, free of cross scratches.
   a. Run grain of directional finishes with long dimension of each piece.
   b. When polishing is completed, passivate and rinse surfaces. Remove embedded foreign matter and leave surfaces chemically clean.
   c. Directional Satin Finish: No. 4.

PART 3 - EXECUTION

3.01 INSTALLATION

A. Comply with manufacturer's written instructions for installing access doors and frames.

B. Set frames accurately in position and attach securely to supports with plane of face panels aligned with adjacent finish surfaces.

C. Install doors flush with adjacent finish surfaces or recessed to receive finish material.

3.02 ADJUSTING AND CLEANING

A. Adjust doors and hardware after installation for proper operation.

B. Remove and replace doors and frames that are warped, bowed, or otherwise damaged.

END OF SECTION 08 31 13

SECTION 08 43 13 - ALUMINUM-FRAMED STOREFRONTS

PART 1 - GENERAL

1.01 RELATED DOCUMENTS

A. The Contractor, Subcontractors, and/or suppliers providing goods or services referenced in or related to this Section shall also be bound by the Documents identified in Division 01 Section “Summary of Work.”

1.02 SUMMARY

A. Section Includes:

1. Exterior storefront framing and entrance systems.

B. Related Sections:

1. Division 07 Section "Joint Sealants" for joint sealants installed with aluminum-framed systems and for sealants to the extent not specified in this Section.
2. Division 08 Section "Glazing" for glazing requirements to the extent not specified in this Section.

1.03 PREINSTALLATION MEETINGS

A. Preinstallation Conference: Conduct conference at Project site.

1.04 PERFORMANCE REQUIREMENTS

A. General Performance: Aluminum-framed systems shall withstand the effects of the following performance requirements without exceeding performance criteria or failure due to defective manufacture, fabrication, installation, or other defects in construction:

1. Movements of supporting structure indicated on Drawings including, but not limited to, story drift and deflection from uniformly distributed and concentrated live loads.
2. Dimensional tolerances of building frame and other adjacent construction.
3. Failure includes the following:

   a. Deflection exceeding specified limits.
   b. Thermal stresses transferring to building structure.
   c. Framing members transferring stresses, including those caused by thermal and structural movements to glazing.
   d. Glazing-to-glazing contact.
   e. Noise or vibration created by wind and by thermal and structural movements.
   f. Loosening or weakening of fasteners, attachments, and other components.
   g. Sealant failure.

B. Delegated Design: Design aluminum-framed systems, including comprehensive engineering analysis by a qualified professional engineer licensed in the State of Rhode Island, using performance requirements and design criteria indicated.

C. Structural Loads:

1. Wind Loads: Provide entrance systems capable of withstanding wind-load design pressures calculated using a “design wind pressure” as determined from the Rhode Island State Building Code, and as determined by the Fabricator’s design engineer.

2. Seismic Loads: Provide entrance systems capable of withstanding the effects of earthquake motions calculated according to the Rhode Island State Building Code, as determined by the Fabricator’s design engineer.

D. Deflection of Framing Members:

1. Deflection Normal to Wall Plane: Limited to 1/175 of clear span for spans up to 13 feet 6 inches and to 1/240 of clear span plus 1/4 inch for spans greater than 13 feet 6 inches or an amount that restricts edge deflection of individual glazing lites to 3/4 inch, whichever is less.
2. Deflection Parallel to Glazing Plane: Limited to amount not exceeding that which reduces glazing bite to less than 75 percent of design dimension and that which reduces edge clearance between framing members and glazing or other fixed components directly below them to less than 1/8 inch and clearance between members and operable units directly below them to less than 1/16 inch.

E. Structural-Test Performance: Provide aluminum-framed systems tested according to ASTM E 330 as follows:

1. When tested at positive and negative wind-load design pressures, systems do not evidence deflection exceeding specified limits.
2. When tested at 150 percent of positive and negative wind-load design pressures, systems, including anchorage, do not evidence material failures, structural distress, and permanent deformation of main framing members exceeding 0.2 percent of span.
3. Test Durations: As required by design wind velocity, but not fewer than 10 seconds.

F. Air Infiltration: Provide aluminum-framed systems with maximum air leakage through fixed glazing and framing areas of 0.06 cfm/sq. ft. of fixed wall area when tested according to ASTM E 283 at a minimum static-air-pressure difference of 1.57 lbf/sq. ft.

G. Water Penetration under Static Pressure: Provide aluminum-framed systems that do not evidence water penetration through fixed glazing and framing areas when tested according to ASTM E 331 at a minimum static-air-pressure difference of 20 percent of positive wind-load design pressure, but not less than 6.24 lbf/sq. ft.

H. Thermal Movements: Provide aluminum-framed systems that allow for thermal movements resulting from the following maximum change (range) in ambient and surface temperatures. Base engineering calculation on surface temperatures of materials due to both solar heat gain and nighttime-sky heat loss.

1. Temperature Change (Range): 120 deg F, ambient; 180 deg F, material surfaces.

2. Test Performance: No buckling; stress on glass; sealant failure; excess stress on framing, anchors, and fasteners; or reduction of performance when tested according to AAMA 501.5.

I. Condensation Resistance: Provide aluminum-framed systems with fixed glazing and framing areas having condensation-resistance factor (CRF) of not less than 55 when tested according to AAMA 1503.

J. Thermal Conductance: Provide aluminum-framed systems with fixed glazing and framing areas having an average U-factor of not more than 0.38 Btu/sq. ft. x h x deg F when tested according to AAMA 1503, and glazed with 1-inch insulated glass units.

1.05 ACTION SUBMITTALS

A. Product Data: For each type of product indicated. Include construction details, material descriptions, dimensions of individual components and profiles, and finishes for aluminum-framed systems.

B. Shop Drawings: For aluminum-framed systems. Include plans, elevations, sections, details, and attachments to other work.

1. Include details of provisions for system expansion and contraction and for drainage of moisture in the system to the exterior.

C. Delegated-Design Submittal: For aluminum-framed systems indicated to comply with performance requirements and design criteria, including analysis data signed and sealed by the qualified professional engineer responsible for their preparation.

1. Detail fabrication and assembly of aluminum-framed systems.
2. Include design calculations.

D. Samples for Verification: For each type of exposed finish required, in manufacturer's standard sizes.

E. Fabrication Sample: Of each vertical-to-horizontal intersection of aluminum-framed systems, made from 12-inch lengths of full-size components and showing details of the following:

1. Joinery, including concealed welds.
2. Anchorage.
3. Expansion provisions.
4. Glazing.
5. Flashing and drainage.

1.06 INFORMATIONAL SUBMITTALS

A. Qualification Data: For qualified Installer.

B. Seismic Qualification Certificates: For aluminum-framed systems, accessories, and components, from manufacturer.

1. Basis for Certification: Indicate whether withstand certification is based on actual test of assembled components or on calculation.

C. Welding certificates.

D. Preconstruction Test Reports: For sealant.

E. Product Test Reports: Based on evaluation of comprehensive tests performed by a qualified testing agency, for aluminum-framed systems, indicating compliance with performance requirements.

F. Source quality-control reports.

G. Warranties: Sample of special warranties.

1.07 CLOSEOUT SUBMITTALS

A. Maintenance Data: For aluminum-framed systems to include in maintenance manuals.

1.08 QUALITY ASSURANCE

A. Installer Qualifications: Manufacturer's authorized representative who is trained and approved for installation of units required for this Project.

B. Engineering Responsibility: Prepare data for aluminum-framed systems, including Shop Drawings, based on testing and engineering analysis of manufacturer's standard units in systems similar to those indicated for this Project.

C. Source Limitations for Aluminum-Framed Systems: Obtain aluminum-framed storefront systems from a single source from a single manufacturer.

D. Preinstallation Conference: Conduct conference at Project site.

1.09 PROJECT CONDITIONS

A. Field Measurements: Verify actual locations of structural supports for aluminum-framed systems by field measurements before fabrication and indicate measurements on Shop Drawings.

1.10 WARRANTY

A. Special Warranty: Manufacturer's standard form in which manufacturer agrees to repair or replace components of aluminum-framed systems that do not comply with requirements or that fail in materials or workmanship within specified warranty period.

1. Failures include, but are not limited to, the following:

a. Structural failures including, but not limited to, excessive deflection.
b. Noise or vibration caused by thermal movements.
c. Deterioration of metals, metal finishes, and other materials beyond normal weathering.
d. Adhesive or cohesive sealant failures.
e. Water leakage through fixed glazing and framing areas.
f. Failure of operating components.

2. Warranty Period: Two years from date of Substantial Completion.

PART 2 - PRODUCTS

2.01 MATERIALS

A. Aluminum: Alloy and temper recommended by manufacturer for type of use and finish indicated.

1. Sheet and Plate: ASTM B 209.
2. Extruded Bars, Rods, Profiles, and Tubes: ASTM B 221.
3. Extruded Structural Pipe and Tubes: ASTM B 429.
4. Structural Profiles: ASTM B 308/B 308M.
5. Welding Rods and Bare Electrodes: AWS A5.10/A5.10M.

B. Steel Reinforcement: Manufacturer's standard zinc-rich, corrosion-resistant primer, complying with SSPC-PS Guide No. 12.00; applied immediately after surface preparation and pretreatment. Select surface preparation methods according to recommendations in SSPC-SP COM and prepare surfaces according to applicable SSPC standard.

1. Structural Shapes, Plates, and Bars: ASTM A 36/A 36M.
2. Cold-Rolled Sheet and Strip: ASTM A 1008/A 1008M.
3. Hot-Rolled Sheet and Strip: ASTM A 1011/A 1011M.

2.02 FRAMING SYSTEMS, GENERAL

A. Brackets and Reinforcements: Manufacturer's standard high-strength aluminum with nonstaining, nonferrous shims for aligning system components.

B. Fasteners and Accessories: Manufacturer's standard corrosion-resistant, nonstaining, nonbleeding fasteners and accessories compatible with adjacent materials.

1. Use self-locking devices where fasteners are subject to loosening or turning out from thermal and structural movements, wind loads, or vibration.
2. Reinforce members as required to receive fastener threads.
3. Use exposed fasteners with countersunk Phillips screw heads to install hardware only, finished to match framing system.

C. Concrete and Masonry Inserts: Hot-dip galvanized cast-iron, malleable-iron, or steel inserts, complying with ASTM A 123/A 123M or ASTM A 153/A 153M.

D. Concealed Flashing: Manufacturer's standard corrosion-resistant, nonstaining, nonbleeding flashing compatible with adjacent materials.

E. Framing System Gaskets and Sealants: Manufacturer's standard, recommended by manufacturer for joint type.

2.03 FRAMING SYSTEMS

A. Basis of Design Product: Subject to compliance with requirements, provide **Kawneer; Trifab 451UT** or one of the following:

1. EFCO; Series 433T.
2. Wausau Window and Wall Systems; 14000 Series.

B. Framing Members: Manufacturer's standard extruded-aluminum framing members, minimum wall thickness of .080”, and reinforced as required to support imposed loads.

1. Construction: Thermally improved.
2. Glazing System: Retained mechanically with gaskets on four sides.
3. Glazing Plane: Front.
4. Depth of Frame: Not less than 4-1/2”.
5. Face of Frame: Not less than 2”.

2.04 GLAZING SYSTEMS

A. Glazing: Furnish and install insulated glazing as specified in Division 08 Section "Glazing."

B. Glazing Gaskets: Manufacturer's standard compression types; replaceable, molded or extruded, of profile and hardness required to maintain watertight seal.

C. Spacers and Setting Blocks: Manufacturer's standard elastomeric type.

D. Bond-Breaker Tape: Manufacturer's standard TFE-fluorocarbon or polyethylene material to which sealants will not develop adhesion.

2.05 ACCESSORY MATERIALS

A. Joint Sealants: For installation at perimeter of aluminum-framed systems, furnished and installed by Division 07 Section "Joint Sealants."

B. Bituminous Paint: Cold-applied, asphalt-mastic paint complying with SSPC-Paint 12 requirements except containing no asbestos; formulated for 30-mil thickness per coat.

2.06 FABRICATION

A. Form or extrude aluminum shapes before finishing.

B. Weld in concealed locations to greatest extent possible to minimize distortion or discoloration of finish. Remove weld spatter and welding oxides from exposed surfaces by descaling or grinding.

C. Framing Members, General: Fabricate components that, when assembled, have the following characteristics:

1. Profiles that are sharp, straight, and free of defects or deformations.
2. Accurately fitted joints with ends coped or mitered.
3. Means to drain water passing joints, condensation within framing members, and moisture migrating within the system to exterior.

4. Physical and thermal isolation of glazing from framing members.
5. Accommodations for thermal and mechanical movements of glazing and framing to maintain required glazing edge clearances.
6. Provisions for field replacement of glazing from exterior.
7. Fasteners, anchors, and connection devices that are concealed from view to greatest extent possible.

D. Mechanically Glazed Framing Members: Fabricate for flush glazing without projecting stops.

E. Storefront Framing: Fabricate components for assembly using screw-spline system.

F. After fabrication, clearly mark components to identify their locations in Project according to Shop Drawings.

2.07 ALUMINUM FINISHES

A. Clear Anodic Finish: AAMA 611, AA-M12C22A41, Class I, 0.018 mm or thicker.

PART 3 - EXECUTION

3.01 EXAMINATION

A. Examine areas and conditions, with Installer present, for compliance with requirements for installation tolerances and other conditions affecting performance of the Work.

B. Proceed with installation only after unsatisfactory conditions have been corrected. Commencement of work indicates acceptance of substrates.

3.02 INSTALLATION

A. General:

1. Comply with manufacturer's written instructions.
2. Do not install damaged components.
3. Fit joints to produce hairline joints free of burrs and distortion.
4. Rigidly secure nonmovement joints.
5. Install anchors with separators and isolators to prevent metal corrosion and electrolytic deterioration.
6. Seal joints watertight unless otherwise indicated.

B. Metal Protection:

1. Where aluminum will contact dissimilar metals, protect against galvanic action by painting contact surfaces with primer or applying sealant or tape, or by installing nonconductive spacers as recommended by manufacturer for this purpose.
2. Where aluminum will contact concrete or masonry, protect against corrosion by painting contact surfaces with bituminous paint.

C. Install components to drain water passing joints, condensation occurring within framing members, and moisture migrating within the system to exterior.

D. Set continuous sill members and flashing in full sealant bed as specified in Division 07 Section "Joint Sealants" to produce weathertight installation.

E. Install components plumb and true in alignment with established lines and grades, and without warp or rack.

F. Furnish and install glazing as specified in Division 08 Section "Glazing."

G. Install joint sealants to comply with Division 07 Section "Joint Sealants", to produce weathertight installation.

3.03 ERECTION TOLERANCES

A. Install aluminum-framed systems to comply with the following maximum erection tolerances:

1. Location and Plane: Limit variation from true location and plane to 1/8 inch in 12 feet; 1/4 inch over total length.
2. Alignment:

a. Where surfaces abut in line, limit offset from true alignment to 1/16 inch.
b. Where surfaces meet at corners, limit offset from true alignment to 1/32 inch.

B. Diagonal Measurements: Limit difference between diagonal measurements to 1/8 inch.

3.04 ADJUSTING, CLEANING, AND PROTECTION

A. Clean aluminum surfaces immediately after installing aluminum-framed systems. Avoid damaging protective coatings and finishes. Remove excess sealants, glazing materials, dirt, and other substances.

B. Clean glass immediately after installation. Comply with manufacturer's written recommendations for final cleaning and maintenance. Remove nonpermanent labels, and clean surfaces.

C. Remove and replace glass that has been broken, chipped, cracked, abraded, or damaged during construction period.

D. Protect aluminum framed surfaces from contact with contaminating substances resulting from construction operations. In addition, monitor surfaces adjacent to and below exterior concrete and masonry surfaces during construction for presence of dirt, scum, alkaline deposits, stains, or other contaminants. If contaminating substances do contact surfaces, remove contaminants immediately according to manufacturer's written recommendations.

END OF SECTION 08 43 13

SECTION 08 71 00 - DOOR HARDWARE

PART 1 - GENERAL

1.01 RELATED DOCUMENTS

A. Drawings and general provisions of the Contract, including General and Supplementary Conditions and Division 1 Specification Sections, apply to this Section.

1.02 SUMMARY

A. Section Includes

1. Furnishing and installation of all mechanical and electrical finish hardware necessary for all doors, and hardware as specified herein and as enumerated in hardware sets and as indicated and required by actual conditions at the building. The hardware shall include the furnishing of all necessary screws, bolts, expansion shields, drop plates, and all other devices necessary for the proper application of the hardware. Installation shall include field modification and preparation of existing doors and/or frames for new hardware being installed. Provide necessary fillers, Dutchmen, reinforcements, and fasteners for mounting new hardware and to cover existing door/frame preps.

B. Related Sections

1. Division 6 Section - Finish Carpentry

2. Division 8 Section - Hollow Metal Doors and Frames

3. Division 8 Section - Aluminum Framed Storefronts

4. Division 8 Section - Glass and Glazing

5. Division 26 Section - Electrical

6. Division 27 Section - Communications

7. Division 28 Section - Electronic Security and Safety

C. Specific Omissions: Hardware for the following is specified or indicated elsewhere, unless specifically listed in the hardware sets:

1. Windows

2. Cabinets of all kinds, including open wall shelving and locks.

3. Signage, except as noted.

4. Complete toilet accessories including coat hooks, unless note otherwise.

5. Overhead doors, unless noted otherwise.

1.03 REFERENCES

A. Applicable state and local building codes and standards.

B. FIRE/LIFE SAFETY

1. NFPA - National Fire Protection Association

a. NFPA 70 – National Electric Code
b. NFPA 80 - Standard for Fire Doors and Fire Windows
c. NFPA 101 - Life Safety Code
d. NFPA 105 - Smoke and Draft Control Door Assemblies

C. UL - Underwriters Laboratories

1. UL 10C - Positive Pressure Test of Fire Door Assemblies

2. UL 1784 - Air Leakage Tests of Door Assemblies

3. UL 305 - Panic Hardware

D. Accessibility

1. ADA - Americans with Disabilities Act

2. Rhode Island Accessibility Code – SBC-14, 15, 16

E. DHI - Door and Hardware Institute

1. Sequence and Format for the Hardware Schedule

2. Recommended Locations for Builders Hardware

F. ANSI - American National Standards Institute

1. ANSI/BHMA A156.1 - A156.29, and ANSI A156.31 - Standards for Hardware and Specialties

1.04 SUBMITTALS

A. General: Submit the following in accordance with Conditions of Contract and Division 1 requirements. Prior to submittal field verify existing doors and/or frames receiving new hardware and/or existing conditions receiving new openings. Verify new hardware is compatible with the existing door/frame preparation and/or existing conditions. Advise architect within the submittal package of incompatibility or issues.

B. Catalog Cuts: Product data including manufacturers' technical product data for each item of door hardware, installation instructions, maintenance of operating parts and finish, and other information necessary to show compliance with requirements.

C. Final Hardware Schedule Content: Submit schedule with hardware sets in vertical format as illustrated by the Sequence of Format for the Hardware Schedule as published by the Door and Hardware Institute. Indicate complete designations of each item required for each door or opening, Include the following information:

1. Door Index; include door number, heading number, and Architects hardware set number.

2. Opening Lock Function Spreadsheet; list locking device and function for each opening.

3. Type, style, function, size, and finish of each hardware item.

4. Name and manufacturer of each item.

5. Fastenings and other pertinent information.

6. Location of each hardware set cross-referenced to indications on Drawings.

7. Handing of each door and degree of opening.

8. Explanation of all abbreviations, symbols, and codes contained in schedule.

9. Mounting locations for hardware.

10. Door and frame sizes and materials and fire and/or smoke rating.

11. Name and phone number for the local manufacturer's representative for each product.

12. Operational Description of openings with any electrified hardware (locks, exits, electromagnetic locks, electric strikes, automatic operators, door position switches, magnetic holders or closer/holder units, and/or access control components). Operational description should include how the door will operate on egress, ingress, and/or fire/smoke alarm connection.

D. Key Schedule: After a keying meeting between representatives of the Owner, Architect, hardware supplier, and, if requested, the representative for the lock manufacturer, provide a keying schedule, listing the levels of keying, as well as an explanation of the key system's function, the key symbols used, and the door numbers controlled. Utilize ANSI A156.28 “Recommended Practices for Keying Systems” as a guideline for nomenclature, definitions, and approach for selecting the optimal keying system.

E. Samples: If requested by the Architect, submit production sample or sample installations as requested of each type of exposed hardware unit in the finish indicated, and tagged with a full description for coordination with the schedule.

1. Samples will be returned to the supplier in like-new condition. Units that are acceptable to the Architect may, after final check of operations, be incorporated into the Work, within limitations of key coordination requirements.

F. Templates: After final approval of the hardware schedule, provide templates for doors, frames, and other work specified to be factory prepared for the installation of door hardware.

G. Riser and Wiring Diagrams: After final approval of the hardware schedule, submit riser and wiring diagrams as required for the proper installation of complete electrical, electromechanical, and electromagnetic products.

H. Operations and Maintenance Data: Provide in accordance with Division 1 and include the following:

1. Complete information on care, maintenance, and adjustment; data on repair and replacement parts, and information on preservation of finishes.

2. Catalog pages for each product.

3. Name, address, and phone number of local representative for each manufacturer.

4. Parts list for each product.

5. Copy of final approved hardware schedule, edited to reflect “As installed.”

6. Copy of final keying schedule.

7. As installed “Wiring Diagrams” for each opening connected to power, both low voltage and 110 volts.

8. One (1) complete set of special tools required for maintenance and adjustment of hardware, including changing of cylinders.

9. Copy of warranties including appropriate reference numbers for manufacturers to identify the project.

I. Certificates of Compliance: Upon request of Architect or Authority Having Jurisdiction certificates of compliance for fire-rated hardware and installation instructions shall be made available.

1.05 QUALITY ASSURANCE

A. Substitutions: Products are to be those specified to ensure a uniform basis of acceptable materials. Requests for substitutions must be made in accordance with Division 1 requirements. If proposing a substitute product, submit product data for the proposed item with product data for the specified item and indicate basis for substitution and savings to be made. Provide sample if requested. Certain products have been selected for their unique characteristics and particular project suitability.

B. Supplier Qualifications: A recognized architectural hardware supplier, with warehousing facilities in the Project's vicinity, that has a record of successful in-service performance for supplying door hardware similar in quantity, type, and quality to that indicated for this Project and that provides a certified Architectural Hardware Consultant (AHC) available to the Owner, Architect, and Contractor, at reasonable times during the course of the Work for consultation.

C. Single Source Responsibility: Obtain each type of hardware (latch and locksets, hinges, exit devices, closers, etc.) from a single manufacturer.

D. Fire-Rated Openings: Provide door hardware for fire-rated openings that complies with NFPA Standard No. 80 and requirements of authorities having jurisdiction. Provide only items of door hardware that are listed and are identical to products tested by Underwrites Laboratories, Intertek Testing Services, or other testing and inspecting organizations acceptable to the authorities having jurisdiction for use on types and sizes of doors indicated in compliance with requirements of fire-rated door and door frame labels.

E. Electronic Security Hardware: When electrified hardware is included in the hardware specification, the hardware supplier must employ an individual knowledgeable in electrified components and systems, who is capable of producing wiring diagrams and consulting as

needed. Coordinate installation of the electronic security hardware with the Architect and electrical engineers and provide installation and technical data to the Architect and other related subcontractors. Upon completion of electronic security hardware installation, inspect and verify that all components are working properly.

1.06 DELIVERY, STORAGE, AND HANDLING

A. Tag each item or package separately with identification related to the final hardware schedule, and include installation instructions with each item or package.

B. Each article of hardware shall be individually packaged in manufacturer's original packaging.

C. Contractor will provide secure lock-up for door hardware delivered to the Project, but not yet installed. Control handling and installation of hardware items so that completion of Work will not be delayed by hardware losses both before and after installation.

D. Items damaged in shipment shall be replaced promptly and with proper material and paid for by whomever did the damage or caused the damage to occur.

E. Hardware shall be handled in a manner to avoid damage, marring, or scratching. Irregularities that occur to the hardware after it has been delivered to the Project shall be corrected, replaced, or repaired by the Contractor. Hardware shall be protected against malfunction due to paint, solvent, cleanser, or any chemical agent.

F. No direct shipments will be allowed unless approved by the Contractor.

1.07 WARRANTY

A. Provide manufacturer's warrantees as specified in Division 1 and as follows:

1. Closers: Limited Lifetime Warranty.

2. Exit Devices: 5 years, except electrified devices, 1 year.

3. Locksets: Limited lifetime warranty.

4. Continuous Hinges: Lifetime warranty

5. Other hardware: 1 year.

B. No liability is to be assumed where damage or faulty operation is due to improper installation, improper use, or abuse.

C. Products judged to be defective during the warranty period shall be replaced or repaired in accordance with the manufacturer's warranty, at no additional cost to the Owner.

1.08 MAINTENANCE

A. Maintenance Tools and Instructions: Furnish a complete set of specialized tools and maintenance instructions as needed for Owner's continued adjustment, maintenance, and removal and replacement of door hardware.

2 PRODUCTS

2.01 MANUFACTURERS

A. Approval of manufacturers other than those listed shall be in accordance with paragraph 1.05.A.

B. Note that even though an acceptable substitute manufacturer may be listed, the product must provide all the functions and features of the specified product or it will not be approved.

C. Hand of Door: Drawings show direction of slide, swing, or hand of each door leaf. Furnish each item of hardware for proper installation and operation of door movement as shown.

D. Where the hardware specified is not adaptable to the finished shape or size of the members requiring hardware, furnish suitable types having the same operation and quality as the type specified, subject to the Architect's approval.

2.02 MATERIALS

A. Fasteners

1. Provide hardware manufactured to conform to published templates, generally prepared for machine screw installation.

2. Furnish screws for installation with each hardware item. Finish exposed (exposed under any condition) screws to match hardware finish, or, if exposed in surfaces of other work, to match finish of this other work as closely as possible including "prepared for paint" surfaces to receive painted finish.

3. Provide concealed fasteners for hardware units that are exposed when door is closed except to the extent that no standard units of type specified are available with concealed fasteners. Do not use thru-bolts for installation where bolt head or nut on opposite face is exposed in other work unless their use is the only means of reinforcing the work adequately to fasten the hardware securely. Review door specification and advise Architect if thru-bolts are required.

4. Hardware shall be installed with the fasteners provided by the hardware manufacturer.

B. Hinges

1. Provide five-knuckle, concealed ball bearing hinges of type, material, and height as outlined in the following guide for this specification:

   a. 1-3/4 inch thick doors, up to and including 36 inches wide:
   Interior: standard weight, steel, 4-1/2 inches high
   b. 1-3/4 inch thick doors over 36 inches wide:
   Interior: heavy weight, steel, 5 inches high
   c. 2 inches or thicker doors:
   Exterior: heavy weight, stainless steel, 5 inches high
   Interior: heavy weight, steel, 5 inches high

2. Provide three hinges per door leaf for doors 90 inches or less in height, and one additional hinge for each 30 inches of additional door height.

3. Where new hinges are specified for existing doors and/or existing frames, the new hinge size must be identical to hinge preparation present in the existing door and/or existing frame.

4. Hinge Pins: Except as otherwise indicated, provide hinge pins as follows:

   a. Steel Hinges: Steel pins
   b. Non-Ferrous Hinges: Stainless steel pins
   c. Out-Swinging Exterior Doors: Non-removable pins
   d. Out-Swinging Interior Lockable Doors: Non-removable pins
   e. Interior Non-lockable Doors: Non-rising pins

5. The width of hinges shall be 4-1/2 inches at 1-3/4 inch thick doors, and 5 inches at 2 inches or thicker doors. Adjust hinge width as required for door, frame, and/or wall conditions to allow proper degree of opening.

6. Acceptable manufacturers and/or products: Stanley CB series, Hager AB series, Bommer LB series.

C. Continuous Hinges

1. Provide aluminum geared continuous hinges conforming to ANSI A156.25, Grade 2.

2. Provide aluminum geared continuous hinges, where specified in the hardware sets, fabricated from 6063-T6 aluminum, with .25 inch diameter Teflon coated stainless steel hinge pin.

3. Provide split nylon bearings at each hinge knuckle for quiet, smooth, self-lubricating operation.

4. Hinges shall be capable of supporting door weights up to 600 pounds, and shall be successfully tested for 1,500,000 cycles.

5. On fire-rated doors, provide aluminum geared continuous hinges that are classified for use on rated doors by a testing agency acceptable to the authority having jurisdiction.

6. Provide aluminum geared continuous hinges with electrified option where specified. Provide with sufficient number and gage of concealed wires to accommodate electric function of specified hardware.

7. Install hinges with fasteners supplied by manufacturer. Hole pattern shall be symmetrically patterned.

8. Acceptable manufacturers and/or products: Stanley, Select, Markar.

D. Flush Bolts

1. Provide automatic and manual flush bolts with forged bronze face plates, extruded brass levers, and with wrought brass guides and strikes. Provide 12 inch steel or brass rods at doors up to 90 inches in height. Top rods at manual flush bolts for doors over 90 inches in height shall be increased by 6 inches for each additional 6 inches of door height. Provide dust-proof strikes at each bottom flush bolt.

2. Acceptable manufacturers and/or products: Trimco, Don-Jo Mfg., Burns.

E. Mortise Locks

1. Provide mortise locks certified as ANSI A156.13, Grade 1 Operational, Grade 2 Security, and manufactured from heavy gauge steel, containing components of steel with a zinc dichromate plating for corrosion resistance. Lock case shall be multi-function and field reversible for handing without opening the case. Cylinders: Refer to 2.04 KEYING.

2. Provide locks with a standard 2-3/4 inches backset with a full 3/4 inch throw stainless steel mechanical anti-friction latchbolt. Deadbolt shall be a full 1 inch throw, constructed of stainless steel.

3. Provide standard ASA strikes unless extended lip strikes are necessary to protect trim.

4. Lever trim shall be solid brass, bronze, or stainless steel, cast or forged in the design specified, with wrought roses and external lever spring cages. Levers shall be thru-bolted to assure proper alignment, and shall have a 2-piece spindle.

   a. Lever design shall be Best 14R.
   b. Lever trim on the secure side of doors serving rooms considered by the authority having jurisdiction to be hazardous shall have a tactile warning.

5. Acceptable manufacturers and/or products: Best 45H series, Schlage L9000 series, Sargent 8200 series.

F. Exit Devices

1. Provide exit devices tested to ANSI/BHMA A156.3 Grade 1, and UL listed for Panic Exit and/or Fire Exit Hardware. Cylinders: Refer to 2.04 KEYING.

2. Exit devices shall be touchpad type, fabricated of brass, bronze, stainless steel, or aluminum, plated to the standard architectural finishes to match the balance of the door hardware.

3. Touchpad shall extend a minimum of one half of the door width. Touch-pad finish shall be compatible to exit device finish. Compression springs will be used in devices, latches, and outside trims or controls, tension springs also acceptable.

4. Devices to incorporate a deadlatching feature for security and/or for future addition of alarm kits and/or other electrical requirements.

5. Provide manufacturer's standard strikes.

6. Provide exit devices cut to door width and height. Locate exit devices at a height recommended by the exit device manufacturer, allowable by governing building codes, and approved by the Architect.

7. Mechanism case shall sit flush on the face of all flush doors, or spacers shall be furnished to fill gaps behind devices. Where glass trim or molding projects off the face of the door, provide glass bead kits.

8. Non-fire-rated exit devices shall have cylinder dogging.

9. Where lever handles are specified as outside trim for exit devices, provide heavy-duty lever trims with forged or cast escutcheon plates. Provide vandal-resistant levers that will travel to a 90-degree down position when more than 35 pounds of torque are applied, and which can easily be re-set.

    a. Lever style will match the lever style of the locksets.
    b. Lever trim on doors serving rooms considered by the authority having jurisdiction to be hazardous shall have a tactile warning.

10. Exit devices for fire rated openings shall be UL labeled fire exit hardware.

11. Acceptable manufacturers and/or products: Precision Apex series, Von Duprin 98 series, Sargent 80 series with deadlatching.

G. Door Closers

1. Provide door closers certified to ANSI/BHMA A156.4 Grade 1 requirements by a BHMA certified independent testing laboratory. Door closers shall have fully hydraulic, full rack and pinion action with a high strength cast iron or aluminum cylinder. Cylinder body shall be 1-1/2 inch diameter.

2. Provide hydraulic fluid requiring no seasonal closer adjustment. Fluid shall be fireproof and shall pass the requirements of the UL10C “positive pressure” fire test.

3. Spring power shall be continuously adjustable over the full range of closer sizes, and allow for reduced opening force as required by accessibility codes and standards. Closers shall have separate adjustment for latch speed, general speed, and backcheck.

4. Provide closers with heavy-duty forged forearms for parallel arm closers.

5. Closers shall not incorporate Pressure Relief Valve (PRV) technology.

6. Provide special templates, drop plates, mounting brackets, or adapters for arms as required for details, overhead stops, and other finish hardware items interfering with closer mounting.

7. Mount closers on room side of corridor doors, inside of exterior doors, and stair side of stairway doors from corridors. Closers shall not be visible in corridors, lobbies and other public spaces unless approved by Architect.

8. Door closers meeting this specification: Stanley Commercial Hardware QDC100 series, LCN 4040XP Series, and Sargent 280 series.

H. Door Trim

1. Provide push plates 8 inches wide x 16 inches high x 0.050 inch thick and beveled 4 edges. Where width of door stile prevents use of 4 inches wide plate, adjust width to fit.

2. Provide pulls of solid bar stock, diameter and length as scheduled. Where required, mount back to back with push bar.

3. Acceptable manufacturers and/or products: Trimco, Don-Jo Mfg., Burns.

I. Protection Plates

1. Provide kick plates, and mop plates, minimum of 0.050 inch thick as scheduled. Furnish with machine or wood screws, finished to match plates. Sizes of plates shall be as follows:

   a. Kick Plates – 8 inches high x 2 inches less width of door on single doors, 1 inch less width of door on pairs
   b. Mop Plates – 4 inches high x 2 inches less width of door on single doors, 1 inch less width of door on pairs

2. Acceptable manufacturers and/or products: Trimco, Don-Jo Mfg., Burns.

J. Overhead Stops

1. Provide heavy duty concealed mounted overhead stop as specified for exterior and interior vestibule single acting doors.

2. Provide medium duty surface for interior doors as specified. Provide medium duty surface mounted overhead stop for interior doors and at any door that swings more than 140 degrees before striking a wall, open against equipment, casework, sidelights, and/or where conditions do not allow a wall stop or a floor stop presents a tripping hazard.

3. Acceptable manufacturers and/or products: Dorma, ABH Manufacturing, Glynn-Johnson.

K. Door Stops

1. Provide door stops for all doors in accordance with the following requirements:

   a. Provide wall stops wherever possible. Provide convex type where mortise type locks are used and concave type where cylindrical type locks are used.
   b. Where wall stops cannot be used, provide dome type floor stops of the proper height.
   c. At any opening where a wall or floor stop cannot be used, a medium duty surface mounted overhead stop shall be used.

2. Acceptable manufacturers and/or products: Trimco, Don-Jo Mfg., Burns.

L. Thresholds, Seals, Door Sweeps, Automatic Door Bottoms, and Gasketing

1. Provide thresholds, weatherstripping (including door sweeps, seals, astragals) and gasketing systems (including smoke, sound, and light) as specified and per architectural details. Match finish of other items as closely as possible. Size of thresholds shall be as follows:

   a. Exterior Saddle Thresholds – 1/2 inch high x jamb width x door width
   b. Interior Saddle Thresholds – ¼ inch high x jamb width x door width
   c. Bumper Seal Thresholds – 1/2 inch high x 5 inches wide x door width

2. Provide door sweeps, seals, astragals, and auto door bottoms only of type where resilient or flexible seal strip is easily replaceable and readily available.

3. Acceptable manufacturers and/or products: National Guard, Zero, Reese.

M. Silencers

1. Provide "Push-in" type silencers for each hollow metal or wood frame. Provide three for each single frame and two for each pair frame. Omit where gasketing is specified or required by code.

2. Acceptable manufacturers and/or products: Trimco, Don-Jo Mfg., Burns.

2.03 FINISHES

A. Finish of all hardware shall be US26D (BHMA 626/652) with the exceptions as follows:

1. Alum. Geared Continuous Hinges: US28 (BHMA 628).

2. Hinges at warehouse and where schedule: US32D (BHMA 630).

3. Exit Devices: US32D (BHMA 630).

4. Push Plates, Pulls: US32D (BHMA 630).

5. Protection Plates: US32D (BHMA 630).

6. Concealed Overhead Stops: Aluminum Powder Coat (BHMA 689).

7. Door Closers: Powder Coat to Match.

8. Wall Stops: US32D (BHMA 630).

9. Weatherstripping: Clear Anodized Aluminum.

10. Thresholds: Mill Finish Aluminum.

2.04 KEYING

A. Provide a new key system from the same manufacturer as the locks conforming to the following requirements:

1. Provide restricted patented removable core cylinders at all exterior keyed devices, exterior and interior removable mullions, and exterior and interior exit device trim. Restricted shall control the access to the products by requiring a signed letter of authorization and/or authorization form from the Owner or authorized agent of the Owner. Patent shall protect against the unauthorized manufacturing and duplication of the products. Restricted patented cores shall not be operable by non-patented key blanks. Restricted patented cores shall incorporate a mechanism to check for the patented features on the keys. Provide construction cores with construction master keying for use during construction. The hardware supplier, accompanied by the Owner or Owner's security agent, shall install permanent keyed cores upon completion of the project. The temporary construction cores are to be returned to the hardware supplier.

2. Provide permanent cores and cylinders keyed by the manufacturer or authorized distributor as directed by the Owner. Provide owner with a copy of the bitting list, return receipt requested.

3. The hardware supplier, accompanied by a qualified factory representative for the manufacturer of the cores and cylinders, shall meet with Owner and Architect to review keying requirements and lock functions prior to ordering finish hardware. Submit a keying schedule to Architect for approval.

4. Provide cores and cylinders, unless noted otherwise, operated by a Grand Master Key System to be established for this project (Do not use the letter "I", “O”, or “X” for any of the grand masters). Allow for twenty-four Master Keys under each Grand Master, and sixty-four changes under each master key. All cylinders shall be keyed in alike or different sets as noted by their respective key set number. Do not use the letter "I" or “O” in any of the master key sets.

5. Provide patented restricted keys as follows:

   a. Ten grand master keys for each set.
   b. Ten master keys for each set.
   c. Three keys per core and/or cylinder.
   d. Two construction core control keys
   e. Two permanent core control keys
   f. Six construction master keys for each type (Contractor is to provide one set of construction keys to Architect)

6. Visual key control:

   a. Keys shall be stamped with their respective key set number and stamped “DO NOT DUPLICATE".
   b. Grand master and master keys shall be stamped with their respective key set letters.
   c. Do not stamp any keys with the factory key change number.
   d. Do not stamp any cores with key set on face (front) of Core. Stamp on back or side of cores so not to be visible when core is in cylinder.

7. Deliver grand master keys, master keys, change keys, and/or key blanks from the factory or authorized distributor directly to the Owner in sealed containers, return receipt requested. Failure to comply with these requirements may be cause to require replacement of all or any part of the keying system that was compromised at no additional cost to the Owner.

8. Approved products: Best Cormax, Schlage Everest 29T, Sargent Signature.

3 EXECUTION

3.01 EXAMINATION

A. Prior to installation of any hardware, examine all doors, frames, walls and related items for conditions that would prevent proper installation of finish hardware. Correct all defects prior to proceeding with installation.

3.02 INSTALLATION

A. Coordination:

1. Prior to installation of hardware, schedule and hold a meeting for the purpose of instructing installers on proper installation and adjustment of finish hardware. Representatives of locks, exit devices, closers, automatic operators, and electrified hardware shall conduct training; provide at least 10 days notice to representatives. After training a letter of compliance, indicating when the training was held and who was in attendance, shall be sent to the Architect.

2. Prior to ordering electrified hardware, schedule and hold a meeting for the purpose of coordinating finish hardware with security, electrical, doors and frames, and other related suppliers. A representative of the supplier of finish hardware, and doors and frames, the electrical subcontractor, and the Owner's security contractor shall meet with the Owner, Architect, and General Contractor prior to ordering finish hardware. After meeting a letter of compliance, indicating when the training was held and who was in attendance, shall be sent to the Architect.

B. Hardware will be installed by qualified tradesmen, skilled in the application of commercial grade hardware. For technical assistance if necessary, installers may contact the manufacturer's rep for the item in question, as listed in the hardware schedule.

C. Mount hardware units at heights indicated in "Recommended Locations for Builders Hardware for Standard Steel Doors and Frames" by the Door and Hardware Institute.

D. Install each hardware item in compliance with the manufacturer's instructions and recommendations, using only the fasteners provided by the manufacturer.

E. Do not install surface mounted items until finishes have been completed on the substrate. Protect all installed hardware during painting.

F. Set units level, plumb and true to line and location. Adjust and reinforce the attachment substrate as necessary for proper installation and operation.

G. Operating parts shall move freely and smoothly without binding, sticking, or excessive clearance.

H. Existing Doors and/or Frames: Remove existing hardware being replaced, tag, and store according to contract documents. Field modify and prepare existing door and/or frame for new hardware being installed. Provide necessary fillers, Dutchmen, reinforcements, and fasteners for mounting new hardware and to cover existing door/frame preps.

I. Wire (including low voltage), conduit, junction boxes, and pulling of wire is by Division 16, Electrical. Electrical Contractor shall connect wire to door position switches and run wire to central room or area as directed by the Architect. Wires shall be tested and labeled with the Architects opening number. Connections to/from power supplies to electrified hardware and any connection to fire/smoke alarm system, and/or smoke evacuation system where specified is by Division 26, Electrical.

3.03 ADJUSTING, CLEANING, AND DEMONSTRATING

A. Adjust and check each operating item of hardware and each door, to insure proper operation or function of every unit. Replace units which cannot be adjusted to operate freely and smoothly.

B. Where door hardware is installed more than one month prior to acceptance or occupancy of a space or area, return to the installation during the week prior to acceptance or occupancy and make a final check and adjustment of all hardware items in such space or area. Clean operating items as necessary to restore proper function and finish of hardware and doors. Adjust door control devices to compensate for final operation of heating and ventilating equipment.

C. Clean adjacent surfaces soiled by hardware installation.

D. Instruct Owner's personnel in the proper adjustment, lubrication, and maintenance of door hardware and hardware finishes.

3.04 FIELD QUALITY CONTROL

A. Prior to Substantial Completion, the installer, accompanied by representatives of the manufacturers of locks, exit devices, closer, and any electrified hardware, shall perform the following work:

1. Examine and re-adjust each item of door hardware as necessary to restore function of doors and hardware to comply with specified requirements.

2. Consult with and instruct Owner's personnel in recommended additions to the maintenance procedures.

3. Replace hardware items that have deteriorated or failed due to faulty design, materials, or installation of hardware units.

4. Prepare a written report of current and predictable problems of substantial nature in the performance of the hardware.

5. At completion of project, a qualified factory representative for the manufacturers of locksets, closer, exit devices, and access control products shall arrange and hold a training session to instruct the Owner's personnel on the proper maintenance, adjustment, and/or operation of their respective products. After training a letter of compliance, indicating when the training was held and who was in attendance, shall be sent to the Architect.

3.05 PROTECTION

A. Provide for the proper protection of complete items of hardware until the Owner accepts the project as complete. Damaged or disfigured hardware shall be replaced or repaired by the responsible party.

3.06 HARDWARE SCHEDULE

A. Provide hardware for each door to comply with requirements of Section "Finish Hardware," hardware set numbers indicated in door schedule, and in the following schedule of hardware sets.

B. It is intended that the following schedule includes complete items of finish hardware necessary to complete the work. If a discrepancy is found in the schedule, such as a missing item, improper hardware for a frame, door or fire codes, the preamble will be the deciding document.

C. Locksets, exit devices, and other hardware items are referenced in the Hardware Sets for series, type, and function. Refer to the preamble for special features, options, cylinders/keying, and other requirements.

D. Hardware Sets

SET HW-1 - EXTERIOR SINGLE ENTRY. - PANIC HARDWARE – Door 100

1	Continuous Hinge	661HD UL	AL	ST
1	Exit Device	2108 X 4908D CD	630	PR
1	Rim Cylinder	AS REQUIRED	626	BE
1	Mortise Cylinder	AS REQUIRED	626	BE
1	Door Closer	QDC115 R	689	SH
1	Overhead Stop	CONCEALED HEAVY DUTY 910 S SERIES	689	DM
1	Kick Plate	K0050 8" X 2" LDW B4E CSK	630	TR
1	Door Sweep	C627 A (DOOR WIDTH)		NA
1	Perimeter Seal	706 E (HEAD & JAMBS)		NA
1	Drip Cap	16 A - 4" ODW		NA
1	Threshold	8425 (DOOR WIDTH)	AL	NA
1	ADA Push Button Operator			

SET HW-2 - EXTERIOR PAIR ENTRY. - PANIC HARDWARE – Door 101A

2	Continuous Hinge	661HD UL	AL	ST
2	Exit Device	2108 X 4908D CD	630	PR
2	Rim Cylinder	AS REQUIRED	626	BE
2	Mortise Cylinder	AS REQUIRED	626	BE
2	Door Closer	QDC115 R	689	SH
2	Overhead Stop	CONCEALED HEAVY DUTY 910 S SERIES	689	DM
2	Kick Plate	K0050 8" X 2" LDW B4E CSK	630	TR
2	Door Sweep	C627 A (DOOR WIDTH)		NA
1	Perimeter Seal	706 E (HEAD & JAMBS)		NA
1	Drip Cap	16 A - 4" ODW (OPENING WIDTH)		NA
1	Threshold	8425 (OPENING WIDTH)	AL	NA
1	ADA Push Button Operator			

SET HW-3 - INTERIOR PAIR ENTRY - PUSH/PULL HARDWARE – Door 101B

6	Hinges	CB199 SERIES AS SPECIFIED	US32D	ST
2	Push Plate	1001-11	630	TR
2	Pull Plate	1018-3B	630	TR
2	Door Closer	QDC111 BF R	689	SH
2	Kick Plate	K0050 8" X 2" LDW B4E CSK	630	TR
2	Floor Stop	1211/1270CV AS REQUIRED	626	TR
1	Smoke Seal	5020 CL (HEADER ONLY)		NA
2	Smoke Seal	5020 CL (JAMBS ONLY)		NA
1	ADA Push Button Operator			

SET HW-4 - EXTERIOR SINGLE OFFICE – CARD READER – Door 105A

1Exit Device 2108 x 4908D CD 630 PR

1	Rim Cylinder	AS REQUIRED	626	BE
1	Mortise Cylinder	AS REQUIRED	626	BE
1	Door Closer	QDC115 R	689	SH
1	Overhead Stop	CONCEALED HEAVY DUTY 910 S SERIES	689	DM
1	Kick Plate	K0050 8" X 2" LDW B4E CSK	630	TR
1	Door Sweep	C627 A (DOOR WIDTH)		NA
1	Perimeter Seal	706 E (HEAD & JAMBS)		NA
1	Drip Cap	16 A - 4" ODW		NA
1	Threshold	8425 (DOOR WIDTH)	AL	NA
1	Card Reader			
1	Door Contact	679-05HM/WD		
1	Power Supply			

OPERATIONA DESCRIPTION: IMMEDIATE EGRESS ALWAYS ALLOWED.
ACCESS BY KEY OR BY CARD READER. CARD READER WILL UNLOCK LOCKSET AND ALLOW ACCESS

SET HW-5 - SINGLE OFFICE WITH CARD READER – Door 105B

3	Hinges	CB179 SERIES AS SPECIFIED	US26D	ST
1	Classroom Lock	45H-7R14R	626	BE
1	Wall Stop	1270CV	626	TR
3	Door Silencers	1229A	GREY	TR
2	Card Reader			
1	Door Contact	679-05HM/WD		
1	Power Supply			

OPERATIONAL DESCRIPTION:
LOCK SHALL BE ON OFFICE SIDE. CARD READERS LOCATED ON BOTH SIDES OF THE DOOR. THE CARD READER WILL UNLOCK THE LOCKSET AND ALLOW ACCESS INTO ROOM OR OUT OF ROOM INTO THE HALLWAY.

SET HW-6 - EXTERIOR SINGLE EGRESS – CARD READER – Door 106A

1	Continuous Hinge	661HD UL	AL	ST
1	Exit Device	2108 X 4908D CD	630	PR
1	Rim Cylinder	AS REQUIRED	626	BE
1	Mortise Cylinder	AS REQUIRED	626	BE
1	Door Closer	QDC115 R	689	SH
1	Overhead Stop	CONCEALED HEAVY DUTY 910 S SERIES	689	DM
1	Kick Plate	K0050 8" X 2" LDW B4E CSK	630	TR
1	Door Sweep	C627 A (DOOR WIDTH)		NA
1	Perimeter Seal	706 E (HEAD & JAMBS)		NA
1	Drip Cap	16 A - 4" ODW		NA
1	Threshold	8425 (DOOR WIDTH)	AL	NA
1	Card Reader			
1	Door Contact	679-05HM/WD		
1	Power Supply			

OPERATIONAL DESCRIPTION:
IMMEDIATE EGRESS ALWAYS ALLOWED. ACCESS BY KEY OR BY CARD READER. CARD READER WILL UNLOCK LOCKSET AND ALLOW ACCESS.

SET HW-7 - SINGLE WITH STOREROOM LOCK – CARD READER – Door 106B

3	Hinges	CB179 NRP SERIES AS SPECIFIED	US26D	ST
1	Storeroom Lock	45H-7R14R 7/8" LTC	626	BE
1	Door Closer	QDC115 BF R	689	SH
1	Kick Plate	K0050 8" X 2" LDW B4E CSK	630	TR
1	Floor Stop	1211/1270CV AS REQUIRED	626	TR
3	Door Silencers	1229A	GREY	TR
1	Card Reader			
1	Door Contact	679-05HM/WD		
1	Power Supply			

OPERATIONAL DESCRIPTION:
ACCESS BY KEY OR BY CARD READER. CARD READER WILL UNLOCK LOCKSET AND ALLOW ACCESS.

SET HW-8 - PAIR WITH STOREROOM LOCK – MECH – Door 114

6	Hinges	CB179 NRP SERIES AS SPECIFIED	US26D	ST
2	Flush Bolt	3917-12	626	TR
1	Door Coordinator			
1	Storeroom Lock	45H-7D14R 7/8" LTC	626	BE
2	Overhead Stop	SURFACE MEDIUM DUTY 700 S SERIES	626	DM
2	Door Silencers	1229A	GREY	TR

SET HW-9 - SINGLE AT RESTROOM WITH PRIVACY LOCKSET – Doors 107, 108

3	Hinges	CB191 NRP SERIES AS SPECIFIED	US32D	ST
1	Privacy Lever Lock	45H-O-L-14-H (Non-Keyed Curved Return)	626	BE
1	Wall Stop	1270CV	626	TR
3	Door Silencers	1229A	GREY	TR

SET HW-10 - SINGLE WITH STOREROOM LOCK – CARD READER – DATA – Door 109

3	Hinges	CB191 NRP SERIES AS SPECIFIED	US32D	ST
1	Storeroom Lock	45H-7D14R	626	BE
1	Floor Stop	1211/1270CV AS REQUIRED	626	TR
3	Door Silencers	1229A	GREY	TR
1	Card Reader			
1	Door Contact	679-05HM/WD		
1	Power Supply			

OPERATIONAL DESCRIPTION:
ACCESS BY KEY OR BY CARD READER. CARD READER WILL UNLOCK LOCKSET AND ALLOW ACCESS.

SET HW-11 - PAIR WITH STOREROOM LOCK – Door 110

6	Hinges	CB179 NRP SERIES AS SPECIFIED	US26D	ST	
2	Flush Bolt	3917-12		626	TR
1	Storeroom Lock	45H-7D14R 7/8" LTC		626	BE
2	Overhead Stop	SURFACE MEDIUM DUTY 700 S SERIES		626	DM
2	Door Silencers	1229A	GREY	TR	

SET HW-12 - SINGLE WITH STOREROOM LOCK – Door 111

3	Hinges	CB191 NRP SERIES AS SPECIFIED	US32D	ST	
1	Storeroom Lock	45H-7D14R		626	BE
1	Floor Stop	1211/1270CV AS REQUIRED		626	TR
3	Door Silencers	1229A	GREY	TR	

SET HW-13 - SINGLE AT RESTROOM WITH PUSH/PULL HDW. – Doors 112, 113

3	Hinges	CB199 SERIES AS SPECIFIED	US32D	ST	
1	Push Plate	1001-11		630	TR
1	Pull Plate	1018-3B		630	TR
1	Door Closer	QDC111 BF R		689	SH
1	Mop Plate	KM050 4" X 1" LDW B4E CSK		630	TR
1	Kick Plate	K0050 8" X 2" LDW B4E CSK		630	TR
1	Floor Stop	1211/1270CV AS REQUIRED		626	TR
3	Door Silencers	1229A	GREY	TR	
1	Deadbolt – keyed both sides				

END OF SECTION 087100

SECTION 08 80 00 - GLAZING

PART 1 - GENERAL

1.01 RELATED DOCUMENTS

A. The Contractor, Subcontractors, and/or suppliers providing goods or services referenced in or related to this Section shall also be bound by the Documents identified in Division 01 Section "Summary of Work."

1.02 SUMMARY

A. This Section includes glazing for the following products and applications, including those specified in other Sections where glazing requirements are specified by reference to this Section:

1. Hollow metal doors and frames.
2. Glazed storefront windows.
3. Transaction window.

B. Related Sections include the following:

1. Division 08 Section "Hollow Metal Doors and Frames."
2. Division 08 Section "Aluminum-Framed Storefronts."

1.03 DEFINITIONS

A. Manufacturers of Glass Products: Firms that produce primary glass, fabricated glass, or both, as defined in referenced glazing publications.

B. Interspace: Space between lites of an insulating-glass unit that contains dehydrated air or a specified gas.

1.04 PERFORMANCE REQUIREMENTS

A. General: Provide glazing systems capable of withstanding normal thermal movement and wind and impact loads (where applicable) without failure, including loss or glass breakage attributable to the following: defective manufacture, fabrication, and installation; failure of sealants or gaskets to remain watertight and airtight; deterioration of glazing materials; or other defects in construction.

B. Glass Design: Glass thickness designations indicated are minimums and are for detailing only. Confirm glass thicknesses by analyzing Project loads and in-service conditions. Provide glass lites in the thickness designations indicated for various size openings, but not less than thicknesses and in strengths (annealed or heat treated) required to meet or exceed the following criteria:

1. Glass Thicknesses: Select minimum glass thicknesses to comply with ASTM E 1300, according to the following requirements:

   a. Specified Design Wind Loads: As indicated, but not less than wind loads applicable to Project as required by ASCE 7 "Minimum Design Loads for Buildings and Other Structures": Section 6.0 "Wind Loads", and the Rhode Island State Building Code.

      1) Basic Wind Speed: 135 mph.

   b. Probability of Breakage for Vertical Glazing: 8 lites per 1000 for lites set vertically or not more than 15 degrees off vertical and under wind action.

      1) Load Duration: 3 seconds or less.

   c. Thickness of Tinted and Heat-Absorbing Glass: Provide the same thickness for each tint color indicated throughout Project.

C. Thermal Movements: Provide glazing that allows for thermal movements resulting from the following maximum change (range) in ambient and surface temperatures acting on glass framing members and glazing components. Base engineering calculation on surface temperatures of materials due to both solar heat gain and nighttime-sky heat loss.

   1. Temperature Change (Range): 120 deg F, ambient; 180 deg F, material surfaces.

D. Thermal and Optical Performance Properties: Provide glass with performance properties specified based on manufacturer's published test data, as determined according to procedures indicated below:

   1. Center-of-Glass Values: Based on using LBL-35298 WINDOW 5.2 computer program for the following methodologies:

      a. U-Factors: NFRC 100 expressed as Btu/ sq. ft. x h x deg F.
      b. Solar Heat Gain Coefficient: NFRC 200.
      c. Solar Optical Properties: NFRC 300.

1.05 PRECONSTRUCTION TESTING

A. Preconstruction Adhesion and Compatibility Testing: Submit to elastomeric glazing sealant manufacturers, for testing indicated below, samples of each glazing material type, tape sealant, gasket, glazing accessory, and glass-framing member that will contact or affect elastomeric glazing sealants:

   1. Use ASTM C 1087 to determine whether priming and other specific joint preparation techniques are required to obtain rapid, optimum adhesion of glazing sealants to glass, tape sealants, gaskets, and glazing channel substrates.
   2. Submit not fewer than eight pieces of each type of material, including joint substrates, shims, joint-sealant backings, secondary seals, and miscellaneous materials.
   3. Schedule sufficient time for testing and analyzing results to prevent delaying the Work.
   4. For materials failing tests, obtain sealant manufacturer's written instructions for corrective measures, including the use of specially formulated primers.
   5. Testing will not be required if elastomeric glazing sealant manufacturers submit data based on previous testing of current sealant products for adhesion to, and compatibility with, glazing materials matching those submitted.

1.06 ACTION SUBMITTALS

A. Product Data: For each glass product and glazing material indicated.

B. Samples: For the following products, in the form of 12-inch- square Samples for glass.

1. Insulating glass for each designation indicated.

C. Glazing Schedule: Use same designations indicated on Drawings for glazed openings in preparing a schedule listing glass types and thicknesses for each size opening and location.

D. Product Certificates: Signed by manufacturers of glass and glazing products certifying that products furnished comply with requirements.

1. For solar-control low-e-coated glass, provide documentation demonstrating that manufacturer of coated glass is certified by coating manufacturer.

1.07 INFORMATIONAL SUBMITTALS

A. Qualification Data: For installers.

B. Preconstruction Adhesion and Compatibility Test Report: From glazing sealant manufacturer indicating glazing sealants were tested for adhesion to glass and glazing channel substrates and for compatibility with glass and other glazing materials.

C. Product Test Reports: For each of the following types of glazing products:

1. Coated float glass.
2. Insulating glass.
3. Glazing sealants.

D. Warranties: Special warranties specified in this Section.

1.08 QUALITY ASSURANCE

A. Manufacturer Qualifications for Insulating-Glass Units with Sputter-Coated, Low-E Coatings: A qualified insulating-glass manufacturer who is approved and certified by coated-glass manufacturer.

B. Installer Qualifications: An experienced installer who has completed glazing similar in material, design, and extent to that indicated for this Project; whose work has resulted in glass installations with a record of successful in-service performance; and who employs glass installers for this Project who are certified under the National Glass Association's Certified Glass Installer Program.

C. Source Limitations for Glass: Obtain each type of glass through one source from a single manufacturer.

D. Source Limitations for Glass Sputter-Coated with Solar-Control Low-E Coatings: Where solar-control low-e coatings of a primary glass manufacturer that has established a certified fabricator program is specified, obtain sputter-coated solar-control low-e-coated glass in fabricated units from a manufacturer that is certified by coated-glass manufacturer.

E. Source Limitations for Glazing Accessories: Obtain glazing accessories through one source from a single manufacturer for each product and installation method indicated.

F. Glass Product Testing: Obtain glass test results for product test reports in "Submittals" Article from a qualified testing agency based on testing glass products.

1. Glass Testing Agency Qualifications: An independent testing agency with the experience and capability to conduct the testing indicated, as documented according to ASTM E 548.

G. Elastomeric Glazing Sealant Product Testing: Obtain sealant test results for product test reports in "Submittals" Article from a qualified testing agency based on testing current sealant formulations within a 36-month period.

1. Sealant Testing Agency Qualifications: An independent testing agency qualified according to ASTM C 1021 to conduct the testing indicated, as documented according to ASTM E 548.
2. Test elastomeric glazing sealants for compliance with requirements specified by reference to ASTM C 920, and where applicable, to other standard test methods.

H. Safety Glazing Products: Comply with testing requirements in 16 CFR 1201**.**

1. Subject to compliance with requirements, obtain safety glazing products permanently marked with certification label of the Safety Glazing Certification Council or another certification agency acceptable to authorities having jurisdiction.
2. Where glazing units, including Kind FT glass and laminated glass, are specified in Part 2 articles for glazing lites more than 9 sq. ft. in exposed surface area of one side, provide glazing products that comply with Category II materials, for lites 9 sq. ft. or less in exposed surface area of one side, provide glazing products that comply with Category I or II materials, except for hazardous locations where Category II materials are required by 16 CFR 1201 and regulations of authorities having jurisdiction.

I. Glazing Publications: Comply with published recommendations of glass product manufacturers and organizations below, unless more stringent requirements are indicated. Refer to these publications for glazing terms not otherwise defined in this Section or in referenced standards.

1. IGMA Publication for Insulating Glass: SIGMA TM-3000, "Glazing Guidelines for Sealed Insulating Glass Units."

J. Insulating-Glass Certification Program: Permanently marked either on spacers or on at least one component lite of units with appropriate certification label of the following testing and inspecting agency:

1. Insulating Glass Certification Council.

K. Mockups: Build mockups to verify selections made under sample submittals and to demonstrate aesthetic effects and set quality standards for materials and execution.

1. Build mockups in the location as directed by Architect.
2. Build glass mockups by installing the following kinds of glass in mockups specified in Division 08 Section "Aluminum-Framed Storefronts" to match glazing systems required for Project, including glazing methods:

a. Coated insulating glass.

3. Approved mockups may become part of the completed Work if undisturbed at time of Substantial Completion.

L. Preinstallation Conference: Conduct conference at Project site to comply with requirements in Division 01 Section "Project Management and Coordination."

1.09 DELIVERY, STORAGE, AND HANDLING

A. Protect glazing materials according to manufacturer's written instructions and as needed to prevent damage to glass and glazing materials from condensation, temperature changes, direct exposure to sun, or other causes.

B. For insulating-glass units that will be exposed to substantial altitude changes, comply with insulating-glass manufacturer's written recommendations for venting and sealing to avoid hermetic seal ruptures.

1.10 PROJECT CONDITIONS

A. Environmental Limitations: Do not proceed with glazing when ambient and substrate temperature conditions are outside limits permitted by glazing material manufacturers and when glazing channel substrates are wet from rain, frost, condensation, or other causes.

1. Do not install liquid glazing sealants when ambient and substrate temperature conditions are outside limits permitted by glazing sealant manufacturer or below 40 deg F.

1.11 WARRANTY

A. Manufacturer's Special Warranty for Coated-Glass Products: Manufacturer's standard form in which coated-glass manufacturer agrees to replace coated-glass units that deteriorate within specified warranty period. Deterioration of coated glass is defined as defects developed from normal use that are not attributed to glass breakage or to maintaining and cleaning coated glass contrary to manufacturer's written instructions. Defects include peeling, cracking, and other indications of deterioration in coating.

1. Warranty Period: 10 years from date of Substantial Completion.

B. Manufacturer's Special Warranty on Insulating Glass: Manufacturer's standard form in which insulating-glass manufacturer agrees to replace insulating-glass units that deteriorate within specified warranty period. Deterioration of insulating glass is defined as failure of hermetic seal under normal use that is not attributed to glass breakage or to maintaining and cleaning insulating glass contrary to manufacturer's written instructions. Evidence of failure is the obstruction of vision by dust, moisture, or film on interior surfaces of glass.

1. Warranty Period: 10 years from date of Substantial Completion.

PART 2 - PRODUCTS

2.01 GLASS PRODUCTS

A. Float Glass: ASTM C 1036, Type I, Quality-Q3, Class I (clear) unless otherwise indicated.

B. Fully Tempered Float Glass: ASTM C 1048, Kind FT (fully tempered), Condition A (uncoated) unless otherwise indicated, Type I, Class 1 (clear) or Class 2 (tinted) as indicated, Quality-Q3.

1. Fabrication Process: By horizontal (roller-hearth) process with roll-wave distortion parallel to bottom edge of glass as installed unless otherwise indicated.

C. Sputter-Coated Float Glass: ASTM C 1376, float glass with metallic-oxide or -nitride coating deposited by vacuum deposition process after manufacture and heat treatment (if any), and complying with other requirements specified.

2.02 INSULATING GLASS

A. Basis-of-Design Product: Subject to compliance with requirements, provide **Vitro Architectural Glass; Graylite II + Solarban 60 (3) Clear** or comparable product by one of the following:

1. Guardian Industries Corp; Sun-Guard.
2. Viracon, Inc.

B. Insulating-Glass Units, General: Factory-assembled units consisting of sealed lites of glass separated by a dehydrated interspace, and complying with ASTM E 774 for Class CBA units and with requirements specified in this Article and in Part 2 "Insulating-Glass Units" Article.

1. Overall Unit Thickness and Thickness of Each Lite: Dimensions indicated for insulating-glass units are nominal and the overall thicknesses of units are measured perpendicularly from outer surfaces of glass lites at unit's edge.
2. Sealing System: Dual seal, with primary and secondary sealants as follows:

a. Polyisobutylene and silicone.

3. Spacer Specifications: Manufacturer's standard spacer material and construction complying with the following requirements:

a. Spacer Material: Aluminum with mill or clear anodic finish.
b. Desiccant: Molecular sieve or silica gel, or blend of both.
c. Corner Construction: Manufacturer's standard corner construction.

C. Sealed Insulating Glass Units: Safety glazing.
1. Application: Provide this type of glazing in the following locations:
a. Panels in doors.
b. Other locations required by applicable federal, state, and local codes and regulations.
c. Other locations indicated on the drawings.
2. Type: Same as other vision glazing except use fully tempered float glass for both outboard and inboard lites.
3. Tint: Clear.

2.03 INTERIOR GLAZING UNITS

A. Interior Single Vision Glazing:
1. Application: All interior glazing unless otherwise indicated.
2. Type: Fully tempered float glass.
3. Tint: Clear.
4. Thickness: 1/4 inch (6 mm).

B. Single Safety Glazing: Non-fire-rated.
1. Application: Provide this type of glazing in the following locations:
a. Glazed lites in doors, except fire doors.
b. Sliding glass doors.

c. Glazed sidelights to doors, except in fire-rated walls and partitions.
d. Other locations required by applicable federal, state, and local codes and regulations.
e. Other locations indicated on the drawings.

2. Type: Fully tempered float glass as specified.
3. Tint: Clear.
4. Thickness: 1/4 inch (6 mm).

C. Transaction Window:

1. Application: All in one unit (frame and glazing) used at customer service.
2. Type: Safe Change SVT Transaction Window
3. Size: 48 x 42
4. Glazing: Ballastic Level 1

2.04 GLAZING SEALANTS

A. General: Provide products of type indicated, complying with the following requirements:

1. Compatibility: Select glazing sealants that are compatible with one another and with other materials they will contact, including glass products, seals of insulating-glass units, and glazing channel substrates, under conditions of service and application, as demonstrated by sealant manufacturer based on testing and field experience.
2. Suitability: Comply with sealant and glass manufacturers' written instructions for selecting glazing sealants suitable for applications indicated and for conditions existing at time of installation.
3. Colors of Exposed Glazing Sealants: As selected by Architect from manufacturer's full range.

B. Glazing Sealant: Neutral-curing silicone glazing sealant complying with ASTM C 920, Type S, Grade NS, Class 50, Use NT.

1. Products: Subject to compliance with requirements, provide one of the following:

a. Dow Corning Corporation; 795.
b. GE Advanced Materials - Silicones; SilPruf SCS2000.
c. Pecora Corporation; 895.
d. Tremco Incorporated; Spectrem 2.

2. Type and Grade: S (single component) and NS (nonsag).
3. Class: 50.
4. Use Related to Exposure: NT (nontraffic).
5. Uses Related to Glazing Substrates: M, G, A, and, as applicable to glazing substrates indicated, O.

a. Use O Glazing Substrates: Coated glass and aluminum coated with a high-performance coating.

2.05 GLAZING TAPES

A. Back-Bedding Mastic Glazing Tapes: Preformed, butyl-based elastomeric tape with a solids content of 100 percent; nonstaining and nonmigrating in contact with nonporous surfaces; with or without spacer rod as recommended in writing by tape and glass manufacturers for application indicated; packaged on rolls with a release paper backing; and complying with ASTM C 1281 and AAMA 800 for products indicated below:

1. AAMA 804.3 tape, where indicated.
2. AAMA 806.3 tape, for glazing applications in which tape is subject to continuous pressure.
3. AAMA 807.3 tape, for glazing applications in which tape is not subject to continuous

pressure.

B. Expanded Cellular Glazing Tapes: Closed-cell, PVC foam tapes; factory coated with adhesive on both surfaces; packaged on rolls with release liner protecting adhesive; and complying with AAMA 800 for the following types:

1. Type 1, for glazing applications in which tape acts as the primary sealant.
2. Type 2, for glazing applications in which tape is used in combination with a full bead of liquid sealant.

2.06 MISCELLANEOUS GLAZING MATERIALS

A. General: Provide products of material, size, and shape complying with referenced glazing standard, requirements of manufacturers of glass and other glazing materials for application indicated, and with a proven record of compatibility with surfaces contacted in installation.

B. Cleaners, Primers, and Sealers: Types recommended by sealant or gasket manufacturer.

C. Setting Blocks: Elastomeric material with a Shore, Type A durometer hardness of 85, plus or minus 5.

D. Spacers: Elastomeric blocks or continuous extrusions with a Shore, Type A durometer hardness required by glass manufacturer to maintain glass lites in place for installation indicated.

E. Edge Blocks: Elastomeric material of hardness needed to limit glass lateral movement (side walking).

F. Cylindrical Glazing Sealant Backing: ASTM C 1330, Type O (open-cell material), of size and density to control glazing sealant depth and otherwise produce optimum glazing sealant performance.

2.07 FABRICATION OF GLAZING UNITS

A. Fabricate glazing units in sizes required to glaze openings indicated for Project, with edge and face clearances, edge and surface conditions, and bite complying with written instructions of product manufacturer and referenced glazing publications, to comply with system performance requirements.

B. Clean-cut or flat-grind vertical edges of butt-glazed monolithic lites in a manner that produces square edges with slight kerfs at junctions with outdoor and indoor faces.

C. Grind smooth and polish exposed glass edges and corners.

PART 3 - EXECUTION

3.01 EXAMINATION

A. Examine framing glazing, with Installer present, for compliance with the following:

1. Manufacturing and installation tolerances, including those for size, squareness, and offsets at corners.
2. Presence and functioning of weep system.
3. Minimum required face or edge clearances.
4. Effective sealing between joints of glass-framing members.

B. Proceed with installation only after unsatisfactory conditions have been corrected.

3.02 PREPARATION

A. Clean glazing channels and other framing members receiving glass immediately before glazing. Remove coatings not firmly bonded to substrates.

3.03 GLAZING, GENERAL

A. Comply with combined written instructions of manufacturers of glass, sealants, gaskets, and other glazing materials, unless more stringent requirements are indicated, including those in referenced glazing publications.

B. Glazing channel dimensions provide necessary bite on glass, minimum edge and face clearances, and adequate sealant thicknesses, with reasonable tolerances. Adjust as required by Project conditions during installation.

C. Protect glass edges from damage during handling and installation. Remove damaged glass from Project site and legally dispose of off Project site. Damaged glass is glass with edge damage or other imperfections that, when installed, could weaken glass and impair performance and appearance.

D. Apply primers to joint surfaces where required for adhesion of sealants, as determined by preconstruction sealant-substrate testing.

E. Install setting blocks in sill rabbets, sized and located to comply with referenced glazing publications, unless otherwise required by glass manufacturer. Set blocks in thin course of compatible sealant suitable for heel bead.

F. Do not exceed edge pressures stipulated by glass manufacturers for installing glass lites.

G. Provide spacers for glass lites where length plus width is larger than 50 inches as follows:

1. Locate spacers directly opposite each other on both inside and outside faces of glass. Install correct size and spacing to preserve required face clearances, unless gaskets and glazing tapes are used that have demonstrated ability to maintain required face clearances and to comply with system performance requirements.
2. Provide 1/8-inch minimum bite of spacers on glass and use thickness equal to sealant width. With glazing tape, use thickness slightly less than final compressed thickness of tape.

H. Provide edge blocking where indicated or needed to prevent glass lites from moving sideways in glazing channel, as recommended in writing by glass manufacturer and according to requirements in referenced glazing publications.

I. Set glass lites in each series with uniform pattern, draw, bow, and similar characteristics.

3.04 TAPE GLAZING

A. Position tapes on fixed stops so that, when compressed by glass, their exposed edges are flush with or protrude slightly above sightline of stops.

B. Install tapes continuously, but not necessarily in one continuous length. Do not stretch tapes to make them fit opening.

C. Cover vertical framing joints by applying tapes to heads and sills first and then to jambs. Cover horizontal framing joints by applying tapes to jambs and then to heads and sills.

D. Place joints in tapes at corners of opening with adjoining lengths butted together, not lapped. Seal joints in tapes with compatible sealant approved by tape manufacturer.

E. Do not remove release paper from tape until just before each glazing unit is installed.

F. Apply heel bead of elastomeric sealant.

G. Center glass lites in openings on setting blocks and press firmly against tape by inserting dense compression gaskets formed and installed to lock in place against faces of removable stops. Start gasket applications at corners and work toward centers of openings.

H. Apply cap bead of elastomeric sealant over exposed edge of tape.

3.05 SEALANT GLAZING (WET)

A. Install continuous spacers, or spacers combined with cylindrical sealant backing, between glass lites and glazing stops to maintain glass face clearances and to prevent sealant from extruding into glass channel and blocking weep systems until sealants cure. Secure spacers or spacers and backings in place and in position to control depth of installed sealant relative to edge clearance for optimum sealant performance.

B. Force sealants into glazing channels to eliminate voids and to ensure complete wetting or bond of sealant to glass and channel surfaces.

C. Tool exposed surfaces of sealants to provide a substantial wash away from glass.

3.06 CLEANING AND PROTECTION

A. Protect exterior glass from damage immediately after installation by attaching crossed streamers to framing held away from glass. Do not apply markers to glass surface. Remove nonpermanent labels, and clean surfaces.

B. Protect glass from contact with contaminating substances resulting from construction operations, including weld splatter. If, despite such protection, contaminating substances do come into contact with glass, remove substances immediately as recommended by glass manufacturer.

C. Examine glass surfaces adjacent to or below exterior concrete and other masonry surfaces at frequent intervals during construction, but not less than once a month, for buildup of dirt, scum, alkaline deposits, or stains; remove as recommended in writing by glass manufacturer.

D. Remove and replace glass that is broken, chipped, cracked, or abraded or that is damaged from natural causes, accidents, and vandalism, during construction period.

E. Wash glass on both exposed surfaces in each area of Project not more than four days before date scheduled for inspections that establish date of Substantial Completion. Wash glass as recommended in writing by glass manufacturer.

3.07 MONOLITHIC FLOAT-GLASS UNITS

A. Clear fully tempered float glass.

1. Thickness: 6.0 mm (1/4 inch.).
2. Provide safety glazing labeling.

3.08 INSULATING-GLASS SCHEDULE

A. Low-E Insulating-Glass Units.

1. Overall Unit Thickness: 1-inch.
2. Thickness of Each Glass Lite: 6.0 mm.
3. Interspace Content: Argon.
4. Outdoor Lite: Clear fully tempered float glass.
5. Indoor Lite: Clear fully tempered float glass.
6. Low-E Coating: Sputtered on second surface.
7. Visible Light Transmittance: 70 percent minimum.
8. Winter Nighttime U-Factor: 0.24 maximum.
9. Solar Heat Gain Coefficient: 0.39 maximum.
10. Outdoor Visible Reflectance: 11 percent maximum.
11. Provide safety glazing labeling.

END OF SECTION

DIVISION 09

SECTION 09 21 16 - GYPSUM BOARD ASSEMBLIES

PART 1 - GENERAL

1.01 RELATED DOCUMENTS

A. The Contractor, Subcontractors, and/or suppliers providing goods or services referenced in or related to this Section shall also be bound by the Documents identified in Division 01 Section "Summary of Work."

1.02 SUMMARY

A. This Section includes the following:

1. Non-load-bearing steel framing members.
2. Interior gypsum board.
3. Security mesh.
4. Exterior gypsum sheathing
5. Drywall Trim

B. Related Sections include the following:

1. Division 06 Section "Miscellaneous Rough Carpentry" for wood blocking built into gypsum board assemblies.
2. Division 07 Section "Joint Sealants" for acoustical sealants furnished and installed by this Section in gypsum board assemblies.
3. Division 08 Section "Access Doors and Frames."
4. Division 09 Section "Painting" for primers applied to gypsum board surfaces.

C. Products installed, but not furnished, under this Section include the following:

1. Access doors and frames, furnished by Fire Protection, Plumbing, Mechanical, and Electrical Subcontractors in accordance with Division 08 Section "Access Doors and Frames."

1.03 SUBMITTALS

A. Product Data: For each type of product indicated.

B. Control Joint Locations: Submit plan with proposed locations of control joints for approval. Architect to provide final determination of all locations.

C. Shop Drawings: Show layout, spacings, sizes, thicknesses, and types of cold-formed metal framing; fabrication; and fastening and anchorage details, including mechanical fasteners. Show reinforcing channels, opening framing, supplemental framing, strapping, bracing, bridging, splices, accessories, connection details, and attachment to adjoining work.

D. Samples: For the following products:

1. Trim Accessories: Full-size Sample in 12-inch- long length for each trim accessory indicated.

E. Product Test Reports: From a qualified testing agency, unless otherwise stated, indicating that each of the following complies with requirements, based on evaluation of comprehensive tests for current products:

1. Expansion anchors.
2. Power-actuated anchors.
3. Mechanical fasteners.

1.04 QUALITY ASSURANCE

A. STC-Rated Assemblies: For STC-rated assemblies, provide materials and construction identical to those tested in assembly indicated according to ASTM E 90 and classified according to ASTM E 413 by an independent testing agency.

1.05 DELIVERY, STORAGE, AND HANDLING

A. Protect cold-formed metal framing from corrosion, deformation, and other damage during delivery, storage, and handling.

B. Store cold-formed metal framing, protect with a waterproof covering, and ventilate to avoid condensation.

C. Store materials inside under cover and keep them dry and protected against damage from weather, condensation, direct sunlight, construction traffic, and other causes. Stack gypsum panels flat to prevent sagging.

1.06 PROJECT CONDITIONS

A. Environmental Limitations: Comply with ASTM C 840 requirements or gypsum board manufacturer's written recommendations, whichever are more stringent.

B. Do not install interior products until installation areas are enclosed and conditioned.

C. Do not install panels that are wet, those that are moisture damaged, and those that are mold damaged.

1. Indications that panels are wet or moisture damaged include, but are not limited to, discoloration, sagging, or irregular shape.
2. Indications that panels are mold damaged include, but are not limited to, fuzzy or splotchy surface contamination and discoloration.

PART 2 - PRODUCTS

2.01 GYPSUM BOARD ASSEMBLIES

A. Provide completed assemblies complying with ASTM C840 and GA-216.

B. Interior Partitions, Indicated as Acoustic: Provide completed assemblies with the following characteristics:

1. Acoustic Attenuation: STC of 45-49 calculated in accordance with ASTM E413, based on tests conducted in accordance with ASTM E90.

2.02 METAL FRAMING MATERIALS

A. Manufacturers - Metal Framing, Connectors, and Accessories:
   1. Clarkwestern Dietrich Building Systems LLC; www.clarkdietrich.com.
   2. Marino; www.marinoware.com.

B. Non-Loadbearing Framing System Components: ASTM C645; galvanized sheet steel, of size and properties necessary to comply with ASTM C754 for the spacing indicated, with maximum deflection of wall framing of L/120 at 5 psf (L/120 at 240 Pa).
   1. Studs: "C" shaped with flat or formed webs with knurled faces.
   2. Runners: U shaped, sized to match studs.
   3. Ceiling Channels: C-shaped.
   4. Furring: Hat-shaped sections, minimum depth of 7/8 inch (22 mm).
   5. Resilient Furring Channels: 1/2 inch (12 mm) depth, for attachment to substrate through both legs; both legs expanded metal mesh.
      a. Products:
         1) Same manufacturer as other framing materials.

C. Ceiling Hangers: Type and size as specified in ASTM C754 for spacing required.

D. Partition Head to Structure Connections: Provide mechanical anchorage devices that accommodate deflection using slotted holes, screws and anti-friction bushings, preventing rotation of studs while maintaining structural performance of partition.
   1. Structural Performance: Maintain lateral load resistance and vertical movement capacity required by applicable code, when evaluated in accordance with AISI S100-12.
   2. Material: ASTM A653/A653M steel sheet, SS Grade 50/340, with G60/Z180 hot dipped galvanized coating.
   3. Provide components UL-listed for use in UL-listed fire-rated head of partition joint systems indicated on drawings.
   4. Deflection and Firestop Track:
      a. Provide mechanical anchorage devices as described above that accommodate deflection while maintaining the fire-rating of the wall assembly.

2.03 BOARD MATERIALS

A. Manufacturers - Gypsum-Based Board:
   1. American Gypsum Company; www.americangypsum.com.
   2. CertainTeed Corporation; www.certainteed.com.
   3. Georgia-Pacific Gypsum; www.gpgypsum.com.
   4. National Gypsum Company; www.nationalgypsum.com/#sle.
   5. USG Corporation; www.usg.com.

B. Gypsum Wallboard: Paper-faced gypsum panels as defined in ASTM C1396/C1396M; sizes to minimize joints in place; ends square cut.
   1. Application: Use for wall surfaces, unless otherwise indicated.
   2. Provide Type X where required
   3. Thickness:
      a. Wall Surfaces: 5/8 inch.
      b. Multi-Layer Assemblies: Thicknesses as indicated on drawings.

C. Backing Board For Wet Areas: One of the following products:
   1. Application: Surfaces behind tile in wet areas including wet lab bench areas, shower ceilings, and toilet walls.
   2. Mold Resistance: Score of 10, when tested in accordance with ASTM D3273.
   3. Glass Mat Faced Board: Coated glass mat water-resistant gypsum backing panel

as defined in ASTM C1178/C1178M.
a. Standard Type: Thickness 5/8 inch (12.7 mm).
b. Products:
1) Georgia-Pacific Gypsum; DensShield Tile Backerboard.
2) USG Corporation; Durock Tile Backerboard.

D. Ceiling Board: Special sag resistant gypsum ceiling board as defined in ASTM C1396/C1396M; sizes to minimize joints in place; ends square cut.
1. Application: Ceilings, unless otherwise indicated.
2. Provide Type X where required
3. Thickness: 1/2 inch (13 mm).
4. Edges: Tapered.

E. Exterior Sheathing Board: Sizes to minimize joints in place; ends square cut.2.03
1. Application: Exterior sheathing, unless otherwise indicated.
2. Edges: Square.
3. Glass Mat Faced Products:
1) Georgia-Pacific Gypsum; DensGlass Sheathing.
2) USG Corporation; Securerock Sheathing.

F. Impact Resistant Wallboard:
1. Application: Where indicated on drawings.
2. Mold Resistance: Score of 10, when tested in accordance with ASTM D3273.
3. Type: Fire resistance rated Type X, UL or WH listed.
4. Thickness: 5/8 inch (16 mm).
5. Edges: Tapered.
6. Products:
1) American Gypsum Company; M-Bloc IR Type X.
2) Georgia-Pacific Gypsum; DensArmor Plus Impact-Resistant.
3) National Gypsum Company; Gold Bond HI-Impact XP Gypsum Board.

2.04 ACCESSORIES

A. Security Mesh: ClarkDietrich Barrier Mesh: Type II, Class I, Complying to ASTM F1267
1. Product: BM75 – 16 Gauge
2. Provide manufacturer's standard clips.

B. Acoustic Insulation: ASTM C665; preformed glass fiber, friction fit type, unfaced. Thickness: to fill wall cavity.

C. Acoustic Sealant: Acrylic emulsion latex or water-based elastomeric sealant; do not use solvent-based non-curing butyl sealant.

D. Screws for Fastening of Gypsum Panel Products to Cold-Formed Steel Studs Less than 0.033 inch (0.84 mm) in Thickness and Wood Members: ASTM C1002; self-piercing tapping screws, corrosion resistant.

E. Screws for Fastening of Gypsum Panel Products to Steel Members from 0.033 to 0.112 inch (0.84 to 2.84 mm) in Thickness: ASTM C954; steel drill screws, corrosion resistant.

F. Anchorage to Substrate: Tie wire, nails, screws, and other metal supports, of type and size to suit application; to rigidly secure materials in place.

G. Deck Closure: Closed cell EVA 200G flute Plugs for metal decking. Williams Products: www.williamsproducts.net/closures.html.

2.05 TRIM ACCESSORIES

A. Interior Trim: ASTM C 1047.

1. Material: Galvanized or aluminum-coated steel sheet, rolled zinc, plastic, or paper-faced galvanized steel sheet.
2. Shapes:

- Cornerbead.
- LC-Bead: J-shaped; exposed long flange receives joint compound.
- U-Bead: J-shaped; exposed short flange does not receive joint compound.
- Expansion (control) joint.
- Drywall reveal: Fry Reglet – 5/8” x 1”: DRM-625-100

2.06 JOINT TREATMENT MATERIALS

A. General: Comply with ASTM C 475/C 475M.

B. Joint Tape:

1. Interior Gypsum Wallboard: Paper.

C. Joint Compound for Interior Gypsum Wallboard: For each coat use formulation that is compatible with other compounds applied on previous or for successive coats.

1. Prefilling: At open joints and damaged surface areas, use setting-type taping compound.
2. Embedding and First Coat: For embedding tape and first coat on joints, fasteners, and trim flanges, use setting-type taping compound.

- Use setting-type compound for installing paper-faced metal trim accessories.

3. Fill Coat: For second coat, use drying-type, all-purpose compound.
4. Finish Coat: For third coat, use drying-type, all-purpose compound.

2.07 AUXILIARY MATERIALS

A. General: Provide auxiliary materials that comply with referenced installation standards and manufacturer's written recommendations.

2.08 FASTENERS

A. General: Provide fasteners of size and type indicated that comply with requirements specified in this Article for material and manufacture.

1. Fasteners for Metal Framing: Of type, material, size, corrosion resistance, holding power, and other properties required to fasten steel members to substrates.

B. Steel Drill Screws: ASTM C 1002, unless otherwise indicated.

1. Use screws complying with ASTM C 954 for fastening panels to steel members from
0.033 to 0.112 inch thick.

PART 3 - EXECUTION

3.01 EXAMINATION

A. Examine areas and substrates, with Installer present, and including welded hollow-metal frames, cast-in anchors, and structural framing, for compliance with requirements and other conditions affecting performance.

B. Examine panels before installation. Reject panels that are wet, moisture damaged, and mold damaged.

C. Proceed with installation only after unsatisfactory conditions have been corrected. Commencement of work indicates acceptance of areas and substrates.

3.02 FRAMING INSTALLATION

A. Metal Framing: Install in accordance with ASTM C754 and manufacturer's instructions.

B. Suspended Ceilings and Soffits: Space framing and furring members as indicated.

C. Studs: Space studs at 16 inches on center (at 406 mm on center).
   1. Extend partition framing to structure where indicated and to ceiling in other locations.
   2. Partitions Terminating at Ceiling: Attach ceiling runner securely to ceiling track in accordance with manufacturer's instructions.
   3. Partitions Terminating at Structure: Attach top runner to structure, maintain clearance between top of studs and structure, and connect studs to track using specified mechanical

      devices in accordance with manufacturer's instructions; verify free movement of top of stud connections; do not leave studs unattached to track.

3.03 ACOUSTIC ACCESSORIES INSTALLATION

A. Acoustic Insulation: Place tightly within spaces, around cut openings, behind and around electrical and mechanical items within partitions, and tight to items passing through partitions.

B. Acoustic Sealant: Install in accordance with manufacturer's instructions.

3.04 BOARD INSTALLATION

A. Comply with ASTM C840, GA-216, and manufacturer's instructions. Install to minimize butt end joints, especially in highly visible locations.

B. Fire-Rated Construction: Install gypsum board in strict compliance with requirements of assembly listing.

C. Exterior Sheathing: Comply with ASTM C1280. Install sheathing vertically, with edges butted tight and ends occurring over firm bearing.
   1. Paper-Faced Sheathing: Immediately after installation, protect from weather by application of water-resistive barrier.

3.05 INSTALLING SUSPENSION SYSTEMS

A. Install suspension system components in sizes and spacings indicated on Drawings, but not less than those required by referenced installation standards for assembly types and other assembly components indicated.

B. Isolate suspension systems from building structure where they abut or are penetrated by building structure to prevent transfer of loading imposed by structural movement.

C. Suspend hangers from building structure as follows:

1. Install hangers plumb and free from contact with insulation or other objects within ceiling plenum that are not part of supporting structural or suspension system.

   a. Splay hangers only where required to miss obstructions and offset resulting horizontal forces by bracing, countersplaying, or other equally effective means.

2. Where width of ducts and other construction within ceiling plenum produces hanger spacings that interfere with locations of hangers required to support standard suspension system members, install supplemental suspension members and hangers in the form of trapezes or equivalent devices.

   a. Size supplemental suspension members and hangers to support ceiling loads within performance limits established by referenced installation standards.

3. Wire Hangers: Secure by looping and wire tying, either directly to structures or to inserts, eye screws, or other devices and fasteners that are secure and appropriate for substrate, and in a manner that will not cause hangers to deteriorate or otherwise fail.
4. Flat Hangers: Secure to structure, including intermediate framing members, by attaching to inserts, eye screws, or other devices and fasteners that are secure and appropriate for structure and hanger, and in a manner that will not cause hangers to deteriorate or otherwise fail.
5. Do not attach hangers to steel roof deck.
6. Do not attach hangers to permanent metal forms. Furnish cast-in-place hanger inserts that extend through forms.
7. Do not attach hangers to rolled-in hanger tabs of composite steel floor deck.
8. Do not connect or suspend steel framing from ducts, pipes, or conduit.

D. Seismic Bracing: Sway-brace suspension systems with hangers used for support.

E. Grid Suspension Systems: Attach perimeter wall track or angle where grid suspension systems meet vertical surfaces. Mechanically join main beam and cross-furring members to each other and butt-cut to fit into wall track.

F. Installation Tolerances: Install suspension systems that are level to within 1/8 inch in 12 feet measured lengthwise on each member that will receive finishes and transversely between parallel members that will receive finishes.

3.06 APPLYING AND FINISHING PANELS, GENERAL

A. Comply with ASTM C 840.

B. Install ceiling panels across framing to minimize the number of abutting end joints and to avoid abutting end joints in central area of each ceiling. Stagger abutting end joints of adjacent panels not less than one framing member.

C. Install panels with face side out. Butt panels together for a light contact at edges and ends with not more than 1/16 inch of open space between panels. Do not force into place.

D. Locate edge and end joints over supports, except in ceiling applications where intermediate

supports or gypsum board back-blocking is provided behind end joints. Do not place tapered edges against cut edges or ends. Stagger vertical joints on opposite sides of partitions. Do not make joints other than control joints at corners of framed openings.

E. Form control and expansion joints with space between edges of adjoining gypsum panels.

F. STC-Rated Assemblies: Seal construction at perimeters, behind control joints, and at openings and penetrations with a continuous bead of acoustical sealant. Install acoustical sealant at both faces of partitions at perimeters and through penetrations. Comply with ASTM C 919 and with manufacturer's written recommendations for locating edge trim and closing off sound-flanking paths around or through assemblies, including sealing partitions above acoustical ceilings.

3.07 APPLYING INTERIOR GYPSUM BOARD

A. Install interior gypsum board in the following locations:

1. Moisture- and Mold-Resistant Type X Gypsum Board: All ceiling locations.

B. Single-Layer Application:

1. On ceilings, apply gypsum panels before wall/partition board application to greatest extent possible and at right angles to framing, unless otherwise indicated.
2. Fastening Methods: Apply gypsum panels to supports with steel drill screws.

3.08 INSTALLING TRIM ACCESSORIES

A. General: For trim with back flanges intended for fasteners, attach to framing with same fasteners used for panels. Otherwise, attach trim according to manufacturer's written instructions.

B. Control Joints: Install control joints at locations indicated on Drawings, or if not indicated, according to ASTM C 840 and in specific locations approved by Architect for visual effect.

C. Interior Trim: Install in the following locations:

1. Cornerbead: Use at outside corners.
2. LC-Bead: Use at exposed panel edges.
3. Drywall Reveal

3.09 FINISHING GYPSUM BOARD

A. General: Treat gypsum board joints, interior angles, edge trim, control joints, penetrations, fastener heads, surface defects, and elsewhere as required to prepare gypsum board surfaces for decoration. Promptly remove residual joint compound from adjacent surfaces.

B. Prefill open joints and damaged surface areas.

C. Apply joint tape over gypsum board joints, except those with trim having flanges not intended for tape.

D. Gypsum Board Finish Levels: Finish panels to levels indicated below and according to ASTM C 840:

1. Level 1: Ceiling plenum areas, concealed areas, and where indicated.
2. Level 4: At panel surfaces that will be exposed to view, unless otherwise indicated.

3.10 PROTECTION

A. Protect installed products from damage from weather, condensation, direct sunlight, construction, and other causes during remainder of the construction period.

B. Remove and replace panels that are wet, moisture damaged, and mold damaged.

1. Indications that panels are wet or moisture damaged include, but are not limited to, discoloration, sagging, or irregular shape.
2. Indications that panels are mold damaged include, but are not limited to, fuzzy or splotchy surface contamination and discoloration.

END OF SECTION 09 21 16

SECTION 09 30 00 - TILING

PART 1 - GENERAL

1.01 RELATED DOCUMENTS

A. The Contractor, Subcontractors, and/or suppliers providing goods or services referenced in or related to this Section shall also be bound by the Documents identified in Division 01 Section “Summary of Work.”

1.02 SUMMARY

A. This Section includes the following:

1. Ceramic tile.

B. Related Sections include the following:

1. Division 07 Section "Joint Sealants" for sealing of expansion, contraction, control, and isolation joints in tile surfaces.

1.03 DEFINITIONS

A. General: Definitions in the ANSI A108 series of tile installation standards and in ANSI A137.1 apply to Work of this Section unless otherwise specified.

B. ANSI A108 Series: ANSI A108.01, ANSI A108.02, ANSI A108.1A, ANSI A108.1B, ANSI A108.1C, ANSI A108.4, ANSI A108.5, ANSI A108.6, ANSI A108.8, ANSI A108.9, ANSI A108.10, ANSI A108.11, ANSI A108.12, ANSI A108.13, ANSI A108.14, ANSI A108.15, ANSI A108.16, and ANSI A108.17, which are contained in its "Specifications for Installation of Ceramic Tile."

C. Module Size: Actual tile size (minor facial dimension as measured per ASTM C 499) plus joint width indicated.

D. Facial Dimension: Nominal tile size as defined in ANSI A137.1.

1.04 ACTION SUBMITTALS

A. Product Data: For each type of product indicated.

B. Shop Drawings: Show locations of each type of tile and tile pattern. Show widths, details, control joints in tile substrates and finished tile surfaces.

1. Indicate locations of all piping penetrations and penetrations for all accessories and access doors.

C. Samples for Initial Selection: For each type of tile and grout indicated. Include Samples of accessories involving color selection.

D. Samples for Verification:

1. Full-size units of each type and composition of tile and for each color and finish required.
2. Full-size units of each type of trim and accessory for each color and finish required.

1.05 INFORMATIONAL SUBMITTALS

A. Master Grade Certificates: For each shipment, type, and composition of tile, signed by tile manufacturer and Installer.

B. Product Certificates: For each type of product, signed by product manufacturer.

C. Qualification Data: For Installer.

1.06 MAINTENANCE MATERIAL SUBMITTALS

A. Furnish extra materials that match and are from same production runs as products installed and that are packaged with protective covering for storage and identified with labels describing contents.

1. Tile and Trim Units: Furnish quantity of full-size units equal to 3 percent of amount installed, for each type, composition, color, pattern, and size indicated.

1.10 DELIVERY, STORAGE, AND HANDLING

A. Deliver and store packaged materials in original containers with seals unbroken and labels intact until time of use. Comply with requirement in ANSI A137.1 for labeling sealed tile packages.

B. Store tile and cementitious materials on elevated platforms, under cover, and in a dry location.

C. Store aggregates where grading and other required characteristics can be maintained and contamination avoided.

D. Store liquid latexes and emulsion adhesives in unopened containers and protected from freezing.

E. Handle tile that has temporary protective coating on exposed surfaces to prevent coated surfaces from contacting backs or edges of other units. If coating does contact bonding surfaces of tile, remove coating from bonding surfaces before setting tile.

1.11 PROJECT CONDITIONS

A. Environmental Limitations: Do not install tile until construction in spaces is complete and ambient temperature and humidity conditions are maintained at the levels indicated in referenced standards and manufacturer's written instructions.

PART 2 - PRODUCTS

2.01 MANUFACTURERS

A. Source Limitations for Tile: Obtain all tile of same type and color or finish from one source or producer.

1. Obtain tile from same production run and of consistent quality in appearance and physical properties for each contiguous area.

B. Source Limitations for Setting and Grouting Materials: Obtain ingredients of a uniform quality for each mortar, adhesive, and grout component from a single manufacturer and each aggregate from one source or producer.

2.02 PRODUCTS, GENERAL

A. ANSI Ceramic Tile Standard: Provide tile that complies with ANSI A137.1, "Specifications for Ceramic Tile," for types, compositions, and other characteristics indicated.

1. Provide tile complying with Standard grade requirements, unless otherwise indicated.
2. For facial dimensions of tile, comply with requirements relating to tile sizes specified in Part 1 "Definitions" Article.

B. ANSI Standards for Tile Installation Materials: Provide materials complying with ANSI A108.02, ANSI standards referenced in other Part 2 articles, ANSI standards referenced by TCNA installation methods specified in tile installation schedules, and other requirements specified.

C. ISO 13007 Standards for Ceramic Tile, Adhesives and Grouts.

D. Colors, Textures, and Patterns: Where manufacturer's standard products are indicated for tile, grout, and other products requiring selection of colors, surface textures, patterns, and other appearance characteristics, provide specific products or materials complying with the following requirements:

1. As indicated by manufacturer's designations.

E. Factory Blending: For tile exhibiting color variations within ranges selected during Sample submittals, blend tile in factory and package so tile units taken from one package show same range in colors as those taken from other packages and match approved Samples.

F. Mounting: For factory-mounted tile, provide back- or edge-mounted tile assemblies as standard with manufacturer, unless otherwise indicated.

1. Where tile is indicated for installation in wet areas, do not use back- or edge-mounted tile assemblies unless tile manufacturer specifies in writing that this type of mounting is suitable for installation indicated and has a record of successful in-service performance.

G. Factory-Applied Temporary Protective Coating: Where indicated under tile type, protect exposed surfaces of tile against adherence of mortar and grout by precoating with continuous film of petroleum paraffin wax, applied hot. Do not coat unexposed tile surfaces.

2.03 TILE PRODUCTS

A. Ceramic Tile**:** Flat and factory mounted flat tile as follows:

1. Basis-of-Design Product: Refer to the drawings. Equal Manufacturers:

a. Daltile.

b. American Olean.
c. Crossville.

2. Thickness: 5/16 inch.
3. Finish/Colors: As indicated on Finish Legend.
4. Grout Color: As indicated on Finish Legend.

2.04 GROUTING MATERIALS

A. Manufacturers: Subject to compliance with requirements, provide products by one of the following:

1. Custom Building Products.
2. LATICRETE International Inc.
3. MAPEI Corporation.

B. Latex-Portland Cement Mortar (Thin Set): ANSI A118.4, consisting of the following:

1. Prepackaged dry-mortar mix containing dry, redispersible, ethylene vinyl acetate additive to which only water must be added at Project site.

a. Product: Subject to compliance with requirements, provide one of the following:

1) Custom Building Products; Versa Bond.
2) LATICRETE International, Inc.; 253 Gold.
3) MAPEI Corporation; Ultraflex 2.

2. For wall applications, provide nonsagging mortar that complies with Paragraph F-4.6.1 in addition to the other requirements in ANSI A118.4 and ISO 13007 C2TES1.

a. Product: Subject to compliance with requirements, provide one of the following, or equal:

1) Custom Building Products; LFT.
2) MAPEI Corporation; Ultraflex LFT.

C. Epoxy Based Tile Grout: ANSI A118.33, and ISO 13007 RG and RGT for walls including base tile.

1. Products: Subject to compliance with requirements, provide one of the following:

a. Custom Building Products; Ceg-Lite.
b. LATICRETE International Inc.; Laticrete SpectraLOCK Pro.
c. MAPEI Corporation; MAPEI Kerapoxy CQ.

2. Colors: As selected by Architect from manufacturer’s full range for each tile indicated.

2.05 ELASTOMERIC SEALANTS

A. General: Provide manufacturer's standard chemically curing, elastomeric sealants of base polymer and characteristics indicated that comply with applicable requirements in Division 07 Section "Joint Sealants."

B. Colors: Provide colors of exposed sealants to match colors of grout in tile adjoining sealed

joints, unless otherwise indicated.

2.06 MISCELLANEOUS MATERIALS

A. Temporary Protective Coating: Either product indicated below that is formulated to protect exposed surfaces of tile against adherence of mortar and grout; compatible with tile, mortar, and grout products; and easily removable after grouting is completed without damaging grout or tile.

1. Petroleum paraffin wax, fully refined and odorless, containing at least 0.5 percent oil with a melting point of 120 to 140 deg F per ASTM D 87.
2. Grout release in form of manufacturer's standard proprietary liquid coating that is specially formulated and recommended for use as temporary protective coating for tile.

B. Tile Cleaner: A neutral cleaner capable of removing soil and residue without harming tile and grout surfaces, specifically approved for materials and installations indicated by tile and grout manufacturers.

2.07 MIXING MORTARS AND GROUT

A. Mix mortars and grouts to comply with referenced standards and mortar and grout manufacturers' written instructions.

B. Add materials, water, and additives in accurate proportions.

C. Obtain and use type of mixing equipment, mixer speeds, mixing containers, mixing time, and other procedures to produce mortars and grouts of uniform quality with optimum performance characteristics for installations indicated.

PART 3 - EXECUTION

3.01 EXAMINATION

A. Examine substrates, areas, and conditions where tile will be installed, with Installer present, for compliance with requirements for installation tolerances and other conditions affecting performance of installed tile.

1. Verify that substrates for setting tile are firm; dry; clean; free of oil, waxy films, and curing compounds; and within flatness tolerances required by referenced ANSI A108 Series of tile installation standards for installations indicated.
2. Verify that installation of grounds, anchors, recessed frames, electrical and mechanical units of work, and similar items located in or behind tile has been completed before installing tile.
3. Verify that joints and cracks in tile substrates are coordinated with tile joint locations; if not coordinated, adjust joint locations in consultation with Architect.
4. Adhesion Testing: Perform tests recommended by manufacturer. Proceed with installation only after substrates pass testing.
5. Moisture Testing: Perform tests recommended by manufacturer and as follows. Proceed with installation only after substrates pass testing.

   a. Perform relative humidity test using in situ probes, ASTM F 2170. Proceed with installation only after substrates have a maximum 75 percent relative humidity

level measurement.

B. Proceed with installation only after unsatisfactory conditions have been corrected.

3.02 PREPARATION

A. Remove coatings, including curing compounds and other substances that contain soap, wax, oil, or silicone, that are incompatible with tile-setting materials.

B. Blending: For tile exhibiting color variations within ranges selected during Sample submittals, verify that tile has been factory blended and packaged so tile units taken from one package show same range of colors as those taken from other packages and match approved Samples. If not factory blended, either return to manufacturer or blend tiles at Project site before installing.

C. Field-Applied Temporary Protective Coating: Where indicated under tile type or needed to prevent grout from staining or adhering to exposed tile surfaces, precoat them with continuous film of temporary protective coating, taking care not to coat unexposed tile surfaces.

3.03 INSTALLATION, GENERAL

A. Comply with TCNA's "Handbook for Ceramic, Glass, and Stone Tile Installation" for TCNA installation methods specified in tile installation schedules. Comply with parts of the ANSI A108 series "Specifications for Installation of Ceramic Tile" that are referenced in TCNA installation methods, specified in tile installation schedules, and apply to types of setting and grouting materials used.

B. Extend tile work into recesses and behind equipment and fixtures to form complete covering without interruptions, unless otherwise indicated. Terminate work neatly at obstructions, edges, and corners without disrupting pattern or joint alignments.

C. Accurately form intersections and returns. Perform cutting and drilling of tile without marring visible surfaces. Carefully grind cut edges of tile abutting trim, finish, or built-in items for straight aligned joints. Fit tile closely to electrical outlets, piping, fixtures, and other penetrations so plates, collars, or covers overlap tile.

D. Grout tile to comply with requirements of the following tile installation standards:

1. For ceramic tile grouts (sand-portland cement; dry-set, commercial portland cement; and latex-portland cement grouts), comply with ANSI A108.10.

3.04 WALL TILE INSTALLATION

A. Install types of tile designated for wall installations to comply with requirements in the Wall Tile Installation Schedule, including those referencing TCA installation methods and ANSI setting-bed standards.

B. Joint Widths: Install tile on walls with the following joint widths:

1. Ceramic Tile: 1/4 inch.

3.05 CLEANING AND PROTECTING

A. Cleaning: On completion of placement and grouting, clean all ceramic tile surfaces so they

are free of foreign matter.

1. Remove epoxy and latex-portland cement grout residue from tile as soon as possible.
2. Clean grout smears and haze from tile according to tile and grout manufacturer's written instructions, but no sooner than 10 days after installation. Use only cleaners recommended by tile and grout manufacturers and only after determining that cleaners are safe to use by testing on samples of tile and other surfaces to be cleaned. Protect metal surfaces and plumbing fixtures from effects of cleaning. Flush surfaces with clean water before and after cleaning.
3. Remove temporary protective coating by method recommended by coating manufacturer that is acceptable to tile and grout manufacturer. Trap and remove coating to prevent it from clogging drains.

B. When recommended by tile manufacturer, apply coat of neutral protective cleaner to completed tile walls and floors. Protect installed tile work with kraft paper or other heavy covering during construction period to prevent staining, damage, and wear.

C. Prohibit foot and wheel traffic from tiled floors for at least seven days after grouting is completed.

D. Before final inspection, remove protective coverings and rinse neutral cleaner from tile surfaces.

3.06 TILE INSTALLATION SCHEDULE

A. Wall Installations:

1. Ceramic Tile Installation: TCNA B421; thinset mortar on waterproof membrane over solid backing.

   a. Ceramic Tile Type: Glazed wall.
   b. Thinset Mortar: Standard dry-set mortar.
   c. Grout: Epoxy grout.

END OF SECTION 09 30 00

SECTION 09 51 13 - ACOUSTICAL PANEL CEILINGS

PART 1 - GENERAL

1.01 RELATED DOCUMENTS

A. The Contractor, Subcontractors, and/or suppliers providing goods or services referenced in or related to this Section shall also be bound by the Documents identified in Division 01 Section “Summary of Work.”

1.02 SUMMARY

A. Section includes:

1. Acoustical panels and exposed suspension systems for ceilings.

B. Related Sections include the following:

1. Division 07 Section “Joint Sealants” for acoustical sealants furnished and installed by this Section in acoustical panel ceiling assemblies.
2. Division 09 Section “Gypsum Board Assemblies” for drywall suspension system for suspended gypsum board ceilings.
3. Division 23 Sections for diffusers.
4. Division 26 Sections for lighting.

1.03 DEFINITIONS

A. CAC: Ceiling Attenuation Class.

B. LR: Light Reflectance coefficient.

C. NRC: Noise Reduction Coefficient.

1.04 SUBMITTALS

A. Product Data: For each type of product indicated.

B. Coordination Drawings: Reflected ceiling plans, drawn to scale, on which the following items are shown and coordinated with each other, based on input from installers of the items involved:

1. Ceiling suspension system members.
2. Method of attaching hangers to building structure.
3. Ceiling-mounted items including lighting fixtures, diffusers, grilles, speakers, sprinklers, access panels, and special moldings.
4. Minimum Drawing Scale: 1/8 inch = 1 foot.

C. Samples for Verification: For each component indicated and for each exposed finish required, prepared on Samples of size indicated below.

1. Acoustical Panel: Set of 6-inch- square Samples of each type, color, pattern, and texture.
2. Exposed Suspension System Members, Moldings, and Trim: Set of 12-inch-long Samples of each type, finish, and color.

D. Product Test Reports: Based on evaluation of comprehensive tests performed by a qualified testing agency, for each acoustical panel ceiling.

E. Research/Evaluation Reports: For each acoustical panel ceiling and components.

F. Maintenance Data: For finishes to include in maintenance manuals.

G. Warranties: Special warranties specified in this Section.

1.05 DELIVERY, STORAGE, AND HANDLING

A. Deliver acoustical panels, suspension system components, and accessories to Project site in original, unopened packages and store them in a fully enclosed, conditioned space where they will be protected against damage from moisture, humidity, temperature extremes, direct sunlight, surface contamination, and other causes.

B. Before installing acoustical panels, permit them to reach room temperature and a stabilized moisture content.

C. Handle acoustical panels carefully to avoid chipping edges or damaging units in any way.

1.06 PROJECT CONDITIONS

A. Environmental Limitations: Do not install acoustical panel ceilings until spaces are enclosed and weatherproof, wet work in spaces is complete and dry, work above ceilings is complete, and ambient temperature and humidity conditions are maintained at the levels indicated for Project when occupied for its intended use.

1.07 COORDINATION

A. Coordinate layout and installation of acoustical panels and suspension system with other construction that penetrates ceilings or is supported by them, including light fixtures, HVAC equipment, and partition assemblies.

1.08 EXTRA MATERIALS

A. Furnish extra materials described below that match products installed and that are packaged with protective covering for storage and identified with labels describing contents.

1. Acoustical Ceiling Panels: Full-size panels equal to 10 percent of quantity installed, for each ceiling panel type.

1.10 WARRANTY

A. Special Warranty for Acoustical Panel Ceilings and Suspension Systems: Manufacturer's standard form in which manufacturer agrees to replace acoustical panel ceilings and

suspension systems that fail in materials or workmanship within specified warranty period.

1. Failure of ceiling panels includes sagging and warping, and growth of mold, mildew and stain causing bacteria.
2. Failure of suspension systems includes rusting.
3. Warranty does not cover damages that may occur from vibrations, fire, water, freezing temperatures, accident or any form of abuse or exposure to abnormal conditions.
4. Warranty Period: 30 years from date of Substantial Completion.

PART 2 - PRODUCTS

2.01 PERFORMANCE REQUIREMENTS

A. Surface-Burning Characteristics: Comply with ASTM E 84; testing by a qualified testing agency. Identify products with appropriate markings of applicable testing agency.

1. Flame-Spread Index: Comply with ASTM E 1264 for Class A materials.
2. Smoke-Developed Index: 450 or less.

B. Seismic Performance: Acoustical ceiling shall withstand the effects of earthquake motions determined according to ASCE/SEI 7 and the Rhode Island State Building Code.

2.02 ACOUSTICAL PANELS, GENERAL

A. Source Limitations: Obtain each type of acoustical ceiling panel and supporting suspension system from single source from single manufacturer.

B. Glass-Fiber-Based Panels: Made with binder containing no urea formaldehyde.

C. Acoustical Panel Standard: Provide manufacturer's standard panels of configuration indicated that comply with ASTM E 1264 classifications as designated by types, patterns, acoustical ratings, and light reflectances, unless otherwise indicated.

1. Mounting Method for Measuring NRC: Type E-400; plenum mounting in which face of test specimen is 15-3/4 inches away from test surface per ASTM E 795.

D. Antimicrobial Fungicide Treatment: Provide acoustical panels with face and back surfaces coated with antimicrobial treatment consisting of manufacturer's standard formulation with fungicide added to inhibit growth of mold and mildew and showing no mold or mildew growth when tested according to ASTM D 3273 and evaluated according to ASTM D 3274 or ASTM G 21.

2.03 ACOUSTICAL PANELS FOR ACOUSTICAL PANEL CEILING

A. Basis-of-Design Product: Subject to compliance with requirements, provide products as indicated by Armstrong World Industries, Inc. or a comparable product by one of the following:

1. CertainTeed.
2. USG Interiors, Inc.

B. Classification: Provide panels complying with ASTM E 1264 for type, form, and pattern as

follows:

1. Ceiling Type:

   a. Basis of Design Product: Armstrong World Industries, Inc.; Fine Fissured High NRC #1758.

      1) Type and Form: Type IV, mineral base with membrane-faced overlay; Form 2, water felted; with acoustically transparent membrane.
      2) Pattern: E (lightly textured)
      3) Color: White.
      4) LR: Not less than 0.86.
      5) NRC: Not less than 0.75.
      6) CAC: Not less than 35.
      7) AC: Not less than 170.
      8) Edge/Joint Detail: Beveled Tegular.
      9) Thickness: 7/8 inch.
      10) Modular Size: 24 x 24 inches.
      11) Antimicrobial Treatment: BioBlock + and HumiGuard Plus.

C. Broad Spectrum Antimicrobial Fungicide and Bactericide Treatment: Provide acoustical panels treated with manufacturer's standard antimicrobial formulation that inhibits fungus, mold, mildew, and gram-positive and gram-negative bacteria and showing no mold, mildew, or bacterial growth when tested according to ASTM D 3273 and evaluated according to ASTM D 3274 or ASTM G 21.

2.04 METAL SUSPENSION SYSTEMS, GENERAL

A. Metal Suspension System Standard: Provide manufacturer's standard direct-hung metal suspension systems of types, structural classifications, and finishes indicated that comply with applicable requirements in ASTM C 635.

B. Finishes and Colors, General: Comply with NAAMM's "Metal Finishes Manual for Architectural and Metal Products" for recommendations for applying and designating finishes. Provide manufacturer's standard factory-applied finish for type of system indicated.

C. Attachment Devices: Size for five times the design load indicated in ASTM C 635, Table 1, "Direct Hung," unless otherwise indicated. Comply with seismic design requirements.

D. Wire Hangers, Braces, and Ties: Provide wires complying with the following requirements:

   1. Zinc-Coated, Carbon-Steel Wire: ASTM A 641/A 641M, Class 1 zinc coating, soft temper.
   2. Size: Select wire diameter so its stress at 3 times hanger design load (ASTM C 635, Table 1, "Direct Hung") will be less than yield stress of wire, but provide not less than 0.106-inch- diameter wire.

E. Hanger Rods: Mild steel, zinc coated or protected with rust-inhibitive paint.

F. Seismic Stabilizer Bars: Manufacturer's standard perimeter stabilizers designed to accommodate seismic forces.

G. Seismic Struts: Manufacturer's standard compression struts designed to accommodate seismic forces.

H. Seismic Clips: Manufacturer's standard seismic clips designed and spaced to secure

acoustical panels in-place.

I. Hold-Down Clips: Provide manufacturer's standard hold-down clips spaced 24 inches o.c. on all cross tees.

1. Provide hold down clips at exterior ceilings.

2.05 METAL SUSPENSION SYSTEM FOR ACOUSTICAL PANEL CEILING

A. Narrow-Face, Capped, Double-Web, Steel Suspension System: Main and cross runners roll formed from cold-rolled steel sheet; prepainted, electrolytically zinc coated, or hot-dip galvanized according to ASTM A 653/A 653M, not less than G30 coating designation; with prefinished 9/16-inch- wide metal caps on flanges.

1. Basis-of-Design Product: Subject to compliance with requirements, provide Armstrong World Industries, Inc.; Suprafine XL 9/16” Exposed Tee.

a. CertainTeed.
b. USG Interiors, Inc.

2. Structural Classification: Intermediate duty system.
3. Face Design: Flat, flush.
4. Face Finish: Painted white.

2.06 METAL EDGE MOLDINGS AND TRIM

A. Roll-Formed, Sheet-Metal Edge Moldings and Trim: Type and profile indicated or, if not indicated, manufacturer's standard moldings for edges and penetrations that comply with seismic design requirements; formed from sheet metal of same material, finish, and color as that used for exposed flanges of suspension system runners.

1. Provide manufacturer's standard edge moldings that fit acoustical panel edge details and suspension systems indicated and that match width and configuration of exposed runners, unless otherwise indicated.

2.07 ACOUSTICAL SEALANT

A. Products: Furnish and install acoustical sealant to comply with Division 07 Section “Joint Sealants.”

PART 3 - EXECUTION

3.01 EXAMINATION

A. Examine substrates, areas, and conditions, including structural framing to which acoustical panel ceilings attach or abut, with Installer present, for compliance with requirements specified in this and other Sections that affect ceiling installation and anchorage and with requirements for installation tolerances and other conditions affecting performance of acoustical panel ceilings.

1. Proceed with installation only after unsatisfactory conditions have been corrected.

3.02 PREPARATION

A. Measure each ceiling area and establish layout of acoustical panels to balance border widths at opposite edges of each ceiling. Avoid using less-than-half-width panels at borders, and comply with layout shown on reflected ceiling plans.

3.03 INSTALLATION

A. General: Install acoustical panel ceilings to comply with ASTM C 636 and seismic design requirements indicated, per manufacturer's written instructions and CISCA's "Ceiling Systems Handbook."

B. Suspend ceiling hangers from building's structural members and as follows:

1. Install hangers plumb and free from contact with insulation or other objects within ceiling plenum that are not part of supporting structure or of ceiling suspension system.
2. Splay hangers only where required to miss obstructions; offset resulting horizontal forces by bracing, counter splaying, or other equally effective means.
3. Where width of ducts and other construction within ceiling plenum produces hanger spacings that interfere with location of hangers at spacings required to support standard suspension system members, install supplemental suspension members and hangers in form of trapezes or equivalent devices.
4. Secure wire hangers to ceiling suspension members and to supports above with a minimum of three tight turns. Connect hangers directly either to structures or to inserts, eye screws, or other devices that are secure and appropriate for substrate and that will not deteriorate or otherwise fail due to age, corrosion, or elevated temperatures.
5. Secure flat, angle, channel, and rod hangers to structure, including intermediate framing members, by attaching to inserts, eye screws, or other devices that are secure and appropriate for both structure to which hangers are attached and type of hanger involved. Install hangers in a manner that will not cause them to deteriorate or fail due to age, corrosion, or elevated temperatures.
6. Do not support ceilings directly from permanent metal forms or floor deck. Fasten hangers to cast-in-place hanger inserts, postinstalled mechanical or adhesive anchors, or power-actuated fasteners that extend through forms into concrete.
7. When steel framing does not permit installation of hanger wires at spacing required, install carrying channels or other supplemental support for attachment of hanger wires.
8. Do not attach hangers to steel deck tabs.
9. Do not attach hangers to steel roof deck. Attach hangers to structural members.
10. Space hangers not more than 48 inches o.c. along each member supported directly from hangers unless otherwise indicated; provide hangers not more than 8 inches from ends of each member.
11. Size supplemental suspension members and hangers to support ceiling loads within performance limits established by referenced standards and publications.

C. Secure bracing wires to ceiling suspension members and to supports with a minimum of four tight turns. Suspend bracing from building's structural members as required for hangers, without attaching to permanent metal forms, steel deck, or steel deck tabs. Fasten bracing wires into concrete with cast-in-place or postinstalled anchors.

D. Install edge moldings and trim of type indicated at perimeter of acoustical ceiling area and where necessary to conceal edges of acoustical panels.

1. Apply acoustical sealant in a continuous ribbon concealed on back of vertical legs of

moldings before they are installed.

2. Screw attach moldings to substrate at intervals not more than 16 inches o.c. and not more than 3 inches from ends, leveling with ceiling suspension system to a tolerance of 1/8 inch in 12 feet. Miter corners accurately and connect securely.

    a. Install moldings in one piece at all walls 12 feet or less in length. Minimize quantity of pieces at longer walls.
    b. Use factory edges where joining lengths of molding. Abut moldings where joined; do not overlap.

3. Do not use exposed fasteners, including pop rivets, on moldings and trim.

E. Install suspension system runners so they are square and securely interlocked with one another. Remove and replace dented, bent, or kinked members.

F. Install acoustical panels with undamaged edges and fit accurately into suspension system runners and edge moldings. Scribe and cut panels at borders and penetrations to provide a neat, precise fit.

1. For reveal-edged panels on suspension system members with box-shaped flanges, install panels with reveal surfaces in firm contact with suspension system surfaces and panel faces flush with bottom face of runners.
2. Paint cut edges of panel remaining exposed after installation; match color of exposed panel surfaces using coating recommended in writing for this purpose by acoustical panel manufacturer.
3. Install hold-down clips in areas indicated.

3.04 CLEANING

A. Clean exposed surfaces of acoustical panel ceilings, including trim, edge moldings, and suspension system members. Comply with manufacturer's written instructions for cleaning and touchup of minor finish damage. Remove and replace ceiling components that cannot be successfully cleaned and repaired to permanently eliminate evidence of damage.

END OF SECTION 09 51 13

SECTION 09 65 13 - RESILIENT BASE AND ACCESSORIES

PART 1 - GENERAL

1.01 RELATED DOCUMENTS

A. The Contractor, Subcontractors, and/or suppliers providing goods and services referenced in or related to this Section shall also be bound by the Related Documents identified in Division 01 Section “Summary of Work.”

1.02 SUMMARY

A. Section Includes:

1. Resilient base.
2. Resilient molding accessories.

1.03 SUBMITTALS

A. Product Data: For each type of product indicated.

B. Samples for Initial Selection: For each type of product indicated.

C. Samples for Verification: For each type of product indicated, in manufacturer's standard-size Samples but not less than 12 inches long, of each resilient product color, texture, and pattern required.

1.04 QUALITY ASSURANCE

A. Fire-Test-Response Characteristics: As determined by testing identical products according to ASTM E 648 or NFPA 253 by a qualified testing agency.

1. Critical Radiant Flux Classification: Class I, not less than 0.45 W/sq. cm.

1.05 DELIVERY, STORAGE, AND HANDLING

A. Store resilient products and installation materials in dry spaces protected from the weather, with ambient temperatures maintained within range recommended by manufacturer, but not less than 50 deg F or more than 90 deg F.

1.06 PROJECT CONDITIONS

A. Maintain ambient temperatures within range recommended by manufacturer, but not less than 70 deg F or more than 95 deg F, in spaces to receive resilient products during the following time periods:

1. 48 hours before installation.
2. During installation.
3. 48 hours after installation.

B. Until Substantial Completion, maintain ambient temperatures within range recommended by manufacturer, but not less than 55 deg F or more than 95 deg F.

C. Install resilient products after other finishing operations, including painting, have been completed.

1.07 EXTRA MATERIALS

A. Furnish extra materials that match products installed and that are packaged with protective covering for storage and identified with labels describing contents.

1. Furnish not less than 10 percent (50 linear feet for every 500 linear feet) or fraction thereof, of each type, color, pattern, and size of resilient product installed.

1.08 WARRANTY

A. General Warranty: Special warranties specified in this Section shall not deprive Owner of other rights Owner may have under other provisions of the Contract Documents and shall be in addition to, and run concurrent with, other warranties made by Contractor under requirements of the Contract Documents.

B. Limited Warranty: Written warranty, signed by manufacturer agreeing to repair or replace resilient flooring, installed according to manufacturer’s written recommendations, that fails in performance, materials, or workmanship within specified warranty period.

1. Warranty Period: One year from date of Substantial Completion.

PART 2 - PRODUCTS

2.01 RESILIENT BASE

A. Basis-of-Design Product: Subject to compliance with requirements, provide Roppe Corporation, Pinnacle Rubber Wall Base or a comparable product by one of the following:

1. Johnsonite.
2. Roppe Corporation
3. Mannington Commercial; Optimum Edge.

B. Product Standard: ASTM F 1861, Type TS (rubber, vulcanized thermoset), Group I (solid, homogeneous).

1. Style: Cove (base with standard toe).

C. Minimum Thickness: 0.125 inch.

D. Height: 6 inches.

E. Lengths: Coils in manufacturer's standard length.

F. Inside and Outside Corners: Job formed, field cut mitered.

G. Color: As indicated on Finish Legend.

2.02 RESILIENT MOLDING ACCESSORY

A. Resilient Molding Accessory:

1. Manufacturers: Subject to compliance with requirements, provide products by one of the following:

a. Johnsonite.
b. Mannington Commercial.
c. Roppe Corporation.

2. Material: Rubber.
3. Provide manufacturer's standard reducer strip for the following conditions:

a. Carpet, including entrance mats, to resinous flooring.
b. Carpet, including entrance mats, to concrete.
c. Resinous flooring to concrete.

4. Colors: As selected by Architect from full range of industry colors.

2.03 INSTALLATION MATERIALS

A. Adhesives: Water-resistant type recommended by manufacturer to suit resilient products and substrate conditions indicated.

PART 3 - EXECUTION

3.01 EXAMINATION

A. Examine substrates, with Installer present, for compliance with requirements for maximum moisture content and other conditions affecting performance of the Work.

B. Verify that finishes of substrates comply with tolerances and other requirements specified in other Sections and that substrates are free of cracks, ridges, depressions, scale, and foreign deposits that might interfere with adhesion of resilient products.

C. Proceed with installation only after unsatisfactory conditions have been corrected.

3.02 PREPARATION

A. Prepare substrates according to manufacturer's written instructions to ensure adhesion of resilient products.
B.
C. Do not install resilient products until they are same temperature as the space where they are to be installed.

1. Move resilient products and installation materials into spaces where they will be installed at least 48 hours in advance of installation.

D. Sweep and vacuum clean substrates to be covered by resilient products immediately before installation.

3.03 RESILIENT BASE INSTALLATION

A. Comply with manufacturer's written instructions for installing resilient base.

B. Apply resilient base to walls, columns, pilasters, casework and cabinets in toe spaces, and other permanent fixtures in rooms and areas where base is required.

C. Install resilient base in lengths as long as practicable without gaps at seams and with tops of adjacent pieces aligned.

D. Tightly adhere resilient base to substrate throughout length of each piece, with base in continuous contact with horizontal and vertical substrates.

E. Do not stretch resilient base during installation.

F. Job-Formed Corners:

1. Outside Corners: Use straight pieces of maximum lengths possible. Form without producing discoloration (whitening) at bends.
2. Inside Corners: Use straight pieces of maximum lengths possible.

3.04 RESILIENT ACCESSORY INSTALLATION

A. Comply with manufacturer's written instructions for installing resilient accessories.

B. Resilient Molding Accessories: Butt to adjacent materials and tightly adhere to substrates throughout length of each piece. Install reducer strips at edges of resilient floor covering that would otherwise be exposed.

3.05 CLEANING AND PROTECTION

A. Comply with manufacturer's written instructions for cleaning and protection of resilient products.

B. Perform the following operations immediately after completing resilient product installation:

1. Remove adhesive and other blemishes from exposed surfaces.
2. Sweep and vacuum surfaces thoroughly.
3. Damp-mop surfaces to remove marks and soil.

C. Protect resilient products from mars, marks, indentations, and other damage from construction operations and placement of equipment and fixtures during remainder of construction period.

D. Cover resilient products until Substantial Completion.

END OF SECTION 09 65 13

SECTION 09 91 00 – PAINTING

PART 1 - GENERAL

1.1 RELATED DOCUMENTS

A. The Contractor, Subcontractors, and/or suppliers providing goods or services referenced in or related to this Section shall also be bound by the Documents identified in Division 01 Section "Summary of Work."

B. Refer to Section 05 05 13 for Fluoropolymer Coatings.

1.2 SUMMARY

A. This Section includes surface preparation and the application of paint systems on the following substrates:

1. Steel.
2. Galvanized metal.
3. Hollow metal doors and frames.
4. Gypsum board.
5. Guard rails.
6. Handrails.
7. Roof.

B. Paint exposed surfaces, except where these Specifications indicate that the surface or material is not to be painted or is to remain natural. If an item or a surface is not specifically mentioned, paint the item or surface the same as similar adjacent materials or surfaces. If a color of finish is not indicated, Architect will select from standard colors and finishes available.

1. Painting includes field painting of exposed bare and covered pipes and ducts, hangers, exposed steel and iron supports, and surfaces of mechanical and electrical equipment that do not have a factory-applied final finish.

C. Do not paint prefinished items, concealed surfaces, finished metal surfaces, operating parts, and labels.

1. Prefinished items include the following factory-finished components:

a. Architectural casework.
b. Phenolic toilet enclosures.
c. Finished mechanical and electrical equipment.
d. Light fixtures and wiring devices.
e. Switchgear.
f. Distribution cabinets in closets or equipment rooms.

2. Concealed surfaces include walls or ceilings in the following generally inaccessible spaces:

a. Foundation spaces.
b. Furred areas.

c. Ceiling plenums.
d. Pipe spaces.
e. Duct shafts.

3. Finished metal surfaces include the following:

a. Anodized or coated aluminum.
b. Stainless steel.
c. Chromium plate.
d. Copper and copper alloys.
e. Bronze and brass.

4. Operating parts include moving parts of operating equipment and the following:

a. Valve and damper operators.
b. Linkages.
c. Sensing devices.
d. Motor and fan shafts.

5. Labels: Do not paint over UL, FMG, or other code-required labels or equipment name, identification, performance rating, or nomenclature plates.

D. Related Sections include the following:

1. Division 05 Section "Metal Fabrications" for shop priming ferrous metal.
2. Division 05 Section “Metal Grating Stairs” for shop priming ferrous metal.
3. Division 05 Section “Pipe and Tube Railings” for shop priming ferrous metal.
4. Division 06 Section “Interior Architectural Woodwork” for items indicated to be field finished by this Section.
5. Division 07 Section “Water Repellants” for clear sealer for concrete slabs.
6. Division 08 Section "Hollow Metal Doors and Frames" for factory priming steel doors and frames.
7. Division 09 Section "Gypsum Board Assemblies" for surface preparation of gypsum board.
8. Division 13 Section "Metal Building Systems" for shop priming structural steel.
9. Divisions 23 and 26 Sections for painting of mechanical and electrical equipment.

1.3 DEFINITIONS

A. General: Standard coating terms defined in ASTM D 16 apply to this Section.

1. Flat refers to a lusterless or matte finish with a gloss range below 15 when measured at an 85-degree meter.
2. Eggshell refers to low-sheen finish with a gloss range between 20 and 35 when measured at a 60-degree meter.
3. Semigloss refers to medium-sheen finish with a gloss range between 35 and 70 when measured at a 60-degree meter.
4. Full gloss refers to high-sheen finish with a gloss range more than 70 when measured at a 60-degree meter.

1.4 SUBMITTALS

A. Product Data: For each type of product indicated.

1. Material List: An inclusive list of required coating materials. Indicate each material and cross-reference specific coating, finish system, and application. Identify each material by manufacturer's catalog number and general classification.
2. Manufacturer's Information: Manufacturer's technical information, including label analysis and instructions for handling, storing, and applying each coating material.
3. Certification by the manufacturer that products supplied comply with State of Rhode Island Ozone Transportation Commission (OTC) regulations controlling use of volatile organic compounds (VOCs).
4. Documentation of the VOC amount contributed by each architectural coating
   a. 85 percent by weight or volume, of site-applied interior architectural coatings applied to walls, floors, and ceilings shall comply with the alternate emissions limits in Table 806.3(2). Compliance with Table 806.3(2) for architectural coating alternate emissions shall be determined utilizing test methodology incorporated by reference in PH/EHLB/Standard APPENDIX A 2017 RHODE ISLAND STRETCH CODE FOR COMMERCIAL CONSTRUCTION 105
   b. Method V.1.1. The alternative emissions testing shall be performed by a laboratory that has the CDPH/EHLB/Standard
   c. Method V.1.1 test methodology in the scope of its ISO 17025 accreditation
5.

TABLE 806.3(2)
ARCHITECTURAL COATINGS VOC EMISSION LIMITS

VOC	LIMIT
Individual	≤ 1/2 CA chronic REL[a]
Formaldehyde	≤ 16.5 µg/m³ or ≤ 13.5 ppb[b]

a. CA Chronic Reference Exposure Level (CREL).
b. Formaldehyde emission levels need not be reported for materials where formaldehyde is not added by the manufacturer of the material.

B. Samples for Verification: For each type of paint system and in each color and gloss of topcoat indicated.

   1. Submit Samples on rigid backing, 8 inches square.
   2. Step coats on Samples to show each coat required for system.
   3. Label each coat of each Sample.
   4. Label each Sample for location and application area.

C. Qualification Data: For firms and persons specified in the “Quality Assurance” Article to demonstrate their capabilities and experience. Include lists of completed projects with project names and addresses, names and addresses of Architects and Owners, and other information specified.

D. Product List: For each product indicated, include the following:

   1. Cross-reference to paint system and locations of application areas. Use same designations indicated on Drawings and in schedules.
   2. VOC content.

1.5 CLOSEOUT SUBMITTALS

A. Maintenance Data: For coatings to include in maintenance manuals. Include the following:

   1. Area summary with Finish Schedule and area detail designating where each product, color, and finish is used.
   2. Product data pages.
   3. Material safety data sheets.
   4. Care and cleaning instructions.
   5. Touch-up procedures.

6. Color samples of each color and finish (gloss level) used.

B. Manual: Provide Sherwin Williams; “Custodian Project Color and Product Information” manual, or equal.

1.6 MAINTENANCE MATERIAL SUBMITTALS

A. Furnish extra materials described below that are from same production run (batch mix) as materials applied and that are packaged for storage and identified with labels describing contents.

1. Quantity: Furnish an additional 1 gallon of each material and color applied.

1.7 QUALITY ASSURANCE

A. Applicator Qualifications: A firm or individual experienced in applying paints and coatings similar in material, design, and extent to those indicated for this Project, whose work has resulted in applications with a record of successful in-service performance.

B. Mockups: Apply benchmark samples of each paint system indicated and each color and finish selected to verify preliminary selections made under sample submittals and to demonstrate aesthetic effects and set quality standards for materials and execution.

1. Architect will select one surface to represent surfaces and conditions for application of each paint system specified in Part 3.

a. Wall Surfaces: Provide samples of at least 100 sq. ft.

2. Apply benchmark samples after permanent lighting and other environmental services have been activated.
3. Final approval of color selections will be based on benchmark samples.

a. If preliminary color selections are not approved, apply additional benchmark samples of additional colors selected by Architect at no added cost to Owner.

4. Approval of mockups does not constitute approval of deviations from the Contract Documents contained in mockups unless Architect specifically approves such deviations in writing.
5. Subject to compliance with requirements, approved mockups may become part of the completed Work if undisturbed at time of Substantial Completion.

1.8 DELIVERY, STORAGE, AND HANDLING

A. Store materials not in use in tightly covered containers in well-ventilated areas with ambient temperatures continuously maintained at not less than 45 deg F.

1. Maintain containers in clean condition, free of foreign materials and residue.
2. Remove rags and waste from storage areas daily.

1.9 PROJECT CONDITIONS

A. Apply paints only when temperature of surfaces to be painted and ambient air temperatures

are between 50 and 95 deg F.

B. Do not apply paints in snow, rain, fog, or mist; when relative humidity exceeds 85 percent; at temperatures less than 5 deg F above the dew point; or to damp or wet surfaces.

PART 2 - PRODUCTS

2.1 MANUFACTURERS

A. Manufacturers: Subject to compliance with requirements, provide products by one of the following:

1. Benjamin Moore & Co., including affiliate the following affiliate brand:

a. Coronado Paint.

2. PPG Architectural Finishes, Inc.; Pittsburgh Paints.
3. Sherwin-Williams Co.

2.2 PAINT, GENERAL

A. Material Compatibility:

1. Provide materials for use within each paint system that are compatible with one another and substrates indicated, under conditions of service and application as demonstrated by manufacturer, based on testing and field experience.
2. For each coat in a paint system, provide products recommended in writing by manufacturers of topcoat for use in paint system and on substrate indicated.

B. VOC Content for Interior Paints and Coatings:

1. All interior paints and coatings shall comply with the VOC content regulations of the Ozone Transportation Commission (OTC) effective in the State of Rhode Island**.** For interior paints and coatings applied at Project site, the following VOC limits, exclusive of colorants added to a tint base, when calculated according to 40 CFR 59, Subpart D (EPA Method 24).

a. Flat Coatings: 100 g/L.
b. Nonflat Coatings: 150 g/L.
c. Nonflat-High Gloss Coatings: 250 g/L.
d. Primers, sealers and undercoaters: 200 g/L.
e. Anti-corrosive and Anti-rust Paints Applied to Ferrous Metals: 250 g/L.
f. Dry-Fog Coatings: 400 g/L.
g. Traffic Marking Paint: 150 g/L.

C. Colors: As indicated on Finish Legend.

2.3 CONCRETE UNIT MASONRY BLOCK FILLERS

A. Concrete Unit Masonry Block Filler: Factory-formulated high-performance latex block fillers **(50 g/L).**

1. Benjamin Moore; Super Spec Masonry Hi-Build Block Filler 206: Applied at a dry film thickness of not less than 8.5 mils.

2. Pittsburgh Paints; 6-7 SpeedHide Interior/Exterior Masonry Latex Block Filler: Applied at a dry film thickness of not less than 7.1 mils.
3. Sherwin-Williams; Prep Rite Block Filler B25W25: Applied at a dry film thickness of not less than 8.0 mils.

2.4 EXTERIOR PRIMERS

A. Exterior Galvanized Metal Primer: Factory-formulated galvanized metal primer for exterior application.

1. Benjamin Moore; Super Spec HP Acrylic Metal Primer No. P04: Applied at a dry film thickness of not less than 2.0 mils.
2. Pittsburgh Paints; 90-712 Pitt-Tech Interior/Exterior Primer/Finish DTM Industrial Enamel: Applied at a dry film thickness of not less than 3.0 mils.
3. Sherwin-Williams; Pro Industrial Pro-Cryl Universal Acrylic Primer: Applied at a dry film thickness of not less than 2.0 mils.

2.5 INTERIOR PRIMERS

A. General: Provide tinted primers as required for dark colors.

B. Interior Gypsum Board Primer: Factory-formulated latex-based primer for interior application (**100 g/L)**.

1. Benjamin Moore, Ultra Spec 500 Interior Latex Primer N534: Applied at a dry film thickness of not less than 1.8 mils.
2. Pittsburgh Paints; 6-2 Speedhide Interior Latex Sealer Quick-Drying: Applied at a dry film thickness of not less than 1.0 mil.
3. Sherwin-Williams; ProMar 200 Zero VOC Primer B28W2600: Applied at a dry film thickness of not less than 1.5 mils.

C. Interior Metal Primer: Factory-formulated metal primer (**250 g/L**).

1. Benjamin Moore; Super Spec Acrylic Metal Primer No. P04: Applied at a dry film thickness of not less than 1.7 mils.
2. Pittsburgh Paints; 90-912 Series Pitt-Tech Interior/Exterior Primer/Finish DTM Industrial Enamel: Applied at a dry film thickness of not less than 2.0 mils.
3. Sherwin-Williams; Pro Industrial Pro-Cryl Universal Acrylic Primer B66 Series: Applied at a dry film thickness of not less than 2.0 mils.

2.6 EXTERIOR PAINTS

A. Exterior Full-Gloss Acrylic Enamel: Factory-formulated full-gloss waterborne acrylic-latex enamel for exterior metal application.

1. Benjamin Moore; Ultra Spec HP DTM Acrylic Gloss Enamel, HP28: Applied at a dry film thickness of not less than 2.3 mils.
2. Pittsburgh Paints; 90-374 Series Pitt-Tech Interior/Exterior High Gloss DTM Industrial Enamels: Applied at a dry film thickness of not less than 3.0 mils.
3. Sherwin-Williams; Acrylic Coating Gloss (Waterborne) B66 Series: Applied at a dry film thickness of not less than 2.4 mils.

2.7 INTERIOR PAINTS

A. 100% Acrylic, low odor, zero VOC, Factory-formulated interior paint for walls and ceilings**.**

1. Walls, Eggshell finish: Benjamin Moore, **Eco Spec, WB Silver 474**: Applied at a dry film thickness of not less than 1.8 mils.

2. Ceilings, Semi-gloss finish: Benjamin Moore, **Eco Spec, WB Silver 476**: Applied at a dry film thickness of not less than 1.8 mils.

B. Semi-Gloss Acrylic Enamel for Metal Surfaces: Factory-formulated semi-gloss acrylic interior enamel (**250 g/L**).

1. Benjamin Moore; Ultra Spec HP DTM Acrylic Semi-Gloss Enamel HP29: Applied at a dry film thickness of not less than 1.5 mils.
2. Pittsburgh Paints; 90-1210 Series Pitt-Tech Plus Interior/Exterior Semi-Gloss DTM Industrial Enamel: Applied at a dry film thickness of not less than 2.0 mils.
3. Sherwin-Williams; Pro Industrial Acrylic B66 Series Semi-Gloss: Applied at a dry film thickness of not less than 2.5 mils.

C. Roof: Signature 300 series paint.

1. Color: Almond, SR .63, SRI 75.

2.8 TRAFFIC MARKING PAINT

A. Pavement-Marking Paint: Acrylic traffic-marking paint (**150 g/L**).

1. Pittsburgh Paints; Zoneline 11-53 Series: Applied at a dry film thickness of not less than
8.6 mils.
2. Sherwin-Williams; Setfast Acyrlic Waterborne Traffic Marking Paint: Applied at a dry film thickness of not less than 8.5 mils**.**

B. Glass Beads: AASHTO M 247, Type 1.

1. Roundness: Minimum 75 percent true spheres by weight.

PART 3 - EXECUTION

3.1 EXAMINATION

A. Examine substrates and conditions, with Applicator present, for compliance with requirements for maximum moisture content and other conditions affecting performance of work.

B. Maximum Moisture Content of Substrates: When measured with an electronic moisture meter as follows:

1. Masonry (Clay and CMU): 12 percent.

2. Gypsum Board: 12 percent.

C. Verify suitability of substrates, including surface conditions and compatibility with existing finishes and primers.

D. Coordination of Work: Review other Sections in which primers are provided to ensure compatibility of the total system for various substrates. On request, furnish information on characteristics of finish materials to ensure use of compatible primers.

1. Notify Architect about anticipated problems when using the materials specified over substrates primed by others.

E. Gypsum Board Substrates: Do not begin paint application until finishing compound is dry and sanded smooth.

F. Begin coating application only after unsatisfactory conditions have been corrected and surfaces are dry.

1. Beginning coating application constitutes Contractor's acceptance of substrates and conditions.

3.2 PREPARATION

A. Comply with manufacturer's written instructions and recommendations in "MPI Architectural Painting Specification Manual" applicable to substrates indicated.

B. Remove hardware, plates, machined surfaces, and similar items already in place that are not to be painted. If removal is impractical or impossible because of size or weight of item, provide surface-applied protection before surface preparation and painting.

1. After completing painting operations, use workers skilled in the trades involved to reinstall items that were removed. Remove surface-applied protection if any.

C. Clean substrates of substances that could impair bond of paints, including dirt, oil, grease, and incompatible paints and encapsulants.

1. Remove incompatible primers and reprime substrate with compatible primers as required to produce paint systems indicated.

D. Concrete Substrates: Remove release agents, curing compounds, efflorescence, and chalk. Do not paint surfaces if moisture content or alkalinity of surfaces to be painted exceeds that permitted in manufacturer's written instructions.

E. Masonry Substrates: Remove efflorescence and chalk. Do not paint surfaces if moisture content or alkalinity of surfaces or mortar joints exceed that permitted in manufacturer's written instructions.

F. Shop-Primed Steel Substrates: Clean field welds, bolted connections, and abraded areas of shop paint, and paint exposed areas with the same material as used for shop priming to comply with SSPC-PA 1 for touching up shop-primed surfaces.

G. Galvanized-Metal Substrates: Remove grease and oil residue from galvanized sheet metal fabricated from coil stock by mechanical methods to produce clean, lightly etched surfaces that promote adhesion of subsequently applied paints.

3.3 APPLICATION

A. Apply paints according to manufacturer's written instructions.

1. Use applicators and techniques suited for paint and substrate indicated.
2. Paint surfaces behind movable equipment and furniture same as similar exposed surfaces. Before final installation, paint surfaces behind permanently fixed equipment or furniture with prime coat only.
3. Paint front and backsides of access panels, removable or hinged covers, and similar hinged items to match exposed surfaces.
4. Do not paint over labels of independent testing agencies or equipment name, identification, performance rating, or nomenclature plates.
5. Primers specified in painting schedules may be omitted on items that are factory primed or factory finished if acceptable to topcoat manufacturers.

B. Tint each undercoat a lighter shade to facilitate identification of each coat if multiple coats of same material are to be applied. Tint undercoats to match color of topcoat, but provide sufficient difference in shade of undercoats to distinguish each separate coat.

C. If undercoats or other conditions show through topcoat, apply additional coats until cured film has a uniform paint finish, color, and appearance.

D. Apply paints to produce surface films without cloudiness, spotting, holidays, laps, brush marks, roller tracking, runs, sags, ropiness, or other surface imperfections. Cut in sharp lines and color breaks.

E. Painting Plumbing, HVAC, Electrical, Communication, and Electronic Safety and Security Work:

1. Paint the following work where exposed in equipment rooms:

a. Equipment, including panelboards.
b. Uninsulated metal piping.
c. Uninsulated plastic piping.
d. Pipe hangers and supports.
e. Metal conduit.
f. Plastic conduit.
g. Tanks that do not have factory-applied final finishes.
h. Duct, equipment, and pipe insulation having cotton or canvas insulation covering or other paintable jacket material.

2. Paint the following work where exposed in occupied spaces:

a. Equipment, including panelboards.
b. Uninsulated metal piping.
c. Uninsulated plastic piping.
d. Pipe hangers and supports.
e. Metal conduit.
f. Plastic conduit.
g. Duct, equipment, and pipe insulation having cotton or canvas insulation covering or other paintable jacket material.
h. Other items as directed by Architect.

3. Paint portions of internal surfaces of metal ducts, without liner, behind air inlets and

outlets that are visible from occupied spaces.

3.4 FIELD QUALITY CONTROL

A. Dry Film Thickness Testing: Owner may engage the services of a qualified testing and inspecting agency to inspect and test paint for dry film thickness.

1. Contractor shall touch up and restore painted surfaces damaged by testing.
2. If test results show that dry film thickness of applied paint does not comply with paint manufacturer's written recommendations, Contractor shall pay for testing and apply additional coats as needed to provide dry film thickness that complies with paint manufacturer's written recommendations.

3.5 CLEANING AND PROTECTION

A. At end of each workday, remove rubbish, empty cans, rags, and other discarded materials from Project site.

B. After completing paint application, clean spattered surfaces. Remove spattered paints by washing, scraping, or other methods. Do not scratch or damage adjacent finished surfaces.

C. Protect work of other trades against damage from paint application. Correct damage to work of other trades by cleaning, repairing, replacing, and refinishing, as approved by Architect, and leave in an undamaged condition.

D. At completion of construction activities of other trades, touch up and restore damaged or defaced painted surfaces.

3.6 EXTERIOR PAINT SCHEDULE

A. Zinc-Coated Metal: Provide the following finish systems over exterior zinc-coated metal surfaces:

1. Full-Gloss Acrylic-Enamel Finish: Two finish coats over galvanized metal.

a. Primer: None required for DTM finish products. Provide manufacturer’s recommended primer if DTM finish product is not available.
b. Finish Coats: Exterior full-gloss acrylic enamel.

3.7 INTERIOR PAINTING SCHEDULE

A. Concrete Unit Masonry: Provide the following finish systems over interior concrete masonry:

1. Low-Luster Acrylic-Enamel Finish: Two finish coats over a filled surface.

a. Block Filler: Concrete unit masonry block filler.
b. Finish Coats: Interior low-luster acrylic enamel.

B. Gypsum Board: Provide the following finish systems over interior gypsum board surfaces:

1. Flat Acrylic Finish (ceilings): Two finish coats over a primer.

a. Primer: Interior gypsum board primer.
b. Finish Coats: Interior flat acrylic paint.

C. Ferrous and Zinc-Coated Metal: Provide the following finish systems over ferrous metal:

1. Semi-Gloss Acrylic-Enamel Finish: Two finish coats over a metal primer.

a. Primer: Metal primer, including surfaces with factory prime coat.
b. Finish Coats: Interior full-gloss acrylic enamel for metal surfaces.

D. Exposed Structure: Provide the following finish system over exposed metal roof deck and steel structure:

1. Flat Dryfall Acrylic-Enamel Finish: One finish coat.

a. Primer: None required for DTM products.
b. Finish Coats: Interior acrylic dryfall for metal surfaces.

E. Traffic Marking: Provide the following finish systems over concrete slabs indicated to receive traffic (line) marking paint:

1. Traffic Marking Paint: One finish coat.

END OF SECTION 09 91 00

SECTION 09 97 13 – THERMAL INSULATING COATING

PART 1 - GENERAL

1.1 RELATED DOCUMENTS

A. The Contractor, Subcontractors, and/or suppliers providing goods or services referenced in or related to this Section shall also be bound by the Documents identified in Division 01 Section “Summary”, Paragraph 1.1A, entitled “Related Documents.”

1.2 SUMMARY

A. Section includes:

1. Corrosion protection primer material, furnished and installed by Division 05 Section “Structural Steel Framing.”
2. Fluid applied acrylic thermal break.

B. Related Requirements:
1. Division 05 Section "Structural Steel Framing= for shop priming of structural steel with primers specified in this Section.
2. Division 09 Section "Painting" for general field painting.

1.3 ACTION SUBMITTALS

A. Product Data: For each type of product. Include preparation requirements and application instructions.

B. Samples for Verification: For each type of coating system and each color and gloss of topcoat indicated.

1. Submit Samples on rigid backing, 8 inches square.
2. Apply coats on Samples in steps to show each coat required for system.
3. Label each coat of each Sample.
4. Label each Sample for location and application area.

C. Product List: Cross-reference to coating system and locations of application areas. Use same designations indicated on Drawings and in schedules. Include color designations.

1.4 QUALITY ASSURANCE

A. Mockups: Apply mockups of each coating system indicated to verify preliminary selections made under Sample submittals and to demonstrate aesthetic effects and set quality standards for materials and execution.

1. Minimum thirty days prior to application in any area, provide mock-up Samples of thermal break materials in accordance with the following requirements:

a. Provide minimum two square feet on representative substrate, where directed by the Architect for each different desired R-Values and finish required for the work.
b. Provide mock-up areas that comply with thickness, density application, finish texture, and color.
c. Inspect mock-up areas within one hour of application for variance due to

shrinkage, temperature, and humidity.

d. Where shrinkage and cracking are evident, adjust mixture and method of application as necessary to meet required installation, R Value, finish, and color requirements.

e. Continue to provide mock-up areas until acceptable areas are produced.

f. Acceptable areas shall constitute standard of acceptance for method of application, thickness, finish texture, and color requirements, for Fluid applied thermal break material applications.

1.5 DELIVERY, STORAGE, AND HANDLING

A. Delivery: Deliver materials in manufacturers' original, sealed, undamaged container with identification label intact. Packaged materials shall bear the appropriate labels, seals.

B. Storage: Materials shall be stored in strict accordance with manufacturers documented instructions.

C. Documentation: All batch number, product identification and quantities shall be recorded on appropriate QC documents. A copy of the transport document and manufacturers conformance certificate shall be attached to the material delivery on site.

D. Store materials not in use in tightly covered containers in well-ventilated areas with ambient temperatures continuously maintained at not less than 45 deg F.

1. Maintain containers in clean condition, free of foreign materials and residue.
2. Remove rags and waste from storage areas daily.

1.6 FIELD CONDITIONS

A. Project Environmental Requirements: Substrate and air temperature shall be in accordance with
the manufacturers' requirements.

1. Protect work area from windblown dust and rain. Protect adjacent areas from over spray of material.
2. Provide ventilation in areas to receive work of this section during application and minimum 24 hours after application.

B. Temperature and Humidity Requirements: Maintain air temperature and relative humidity in areas where products will be applied for a time period before during and after application as recommended by manufacturer.

1. Do not apply Fluid Applied Acrylic Thermal Break when temperature of substrate and/or surrounding ambient air temperature is below 45° F. Temporary protection and heat shall be maintained at this minimum temperature for 24 hours before, during and 24 hours after material application.
2. Steel substrate temperature shall be a minimum of 5° F (3° C) above the dew point of the surrounding air for a period of 24 hours prior, during the application of the material and 24 hour cure period.
3. If necessary for job schedule, the General Contractor shall provide enclosures and heat to maintain proper temperatures and humidity levels in the application areas.
4. The relative humidity of the application area shall not exceed a maximum of 85% 24 hours prior, during and 24 hours after the application of the material. The relative humidity shall not exceed 75% throughout the application and curing of the decorative top coat finish.

PART 2 - PRODUCTS

2.1 THERMAL INSULATING COATINGS

A. The fluid applied thermal break acrylic Aerogel based material shall be applied at the required thickness to provide the required R - Value of 0.25.

1. In no case shall the thickness be less than and the required R- value required and K-value of 35mW/mK per inch.

B. Material Compatibility:

1. Materials for use within each paint system shall be compatible with one another and substrates indicated, under conditions of service and application as demonstrated by manufacturer, based on testing and field experience.
2. Products shall be of same manufacturer for each coat in a coating system.

C. Primer: Shop applied by Division 05 Section <Structural Steel Framing.=

1. Basis of Design Product: Subject to compliance with requirements, provide the following:

   a. Tnemec Series 394 PerimePrime.

D. Thermal Insulating Coating: Fluid-applied, thermal insulating coating that imparts insulative properties.

1. Basis of Design Product: Subject to compliance with requirements, provide the following:

   a. Tnemec; Aerolon Acrylic Series 971.

2. R-Value Thermal Conductivity K-value of 35mW/mK - 0.02Btu/hr ft. degrees F. No <R=-Value equivalent data is acceptable.

Series 971 Thickness	Approximate R-Value
250 mils (1/4=)	1.0

3. Properties:

   a. Solids by Volume 76% Water based thermal acrylic spray applied
   b. Recommended Film thickness 40-300 mils applied in multiple applications to specified R- Value
   c. VOC Content 0.01 lbs./Gallon (1.0 grams /liter)
   d. Thinned .01 lbs./ gallon (1.0 grams /liter)
   e. HAPS- 0 lbs. per gallon solids
   f. Curing time at 75º F, 4 hours to touch , 16 hours to recoat
   g. Must meet ASTM C 518- No more than 50 mW/ mK
   h. Net weight per gallon- 4.66 lbs. per gallon
   i. Storage Temperature 40º F Maximum 110º F
   j. Number of components: one component
   k. Primer required.
   l. Topcoat required.

m. Pot Life – 2 hours
n. Spray life – 2 hours

4. Surface-Burning Characteristics: As determined by testing identical products per ASTM E 84, by UL or another qualified testing agency.

a. Flame-Spread Index: 25 or less (Class A).
b. Smoke-Developed Index: 450 or less.

E. Color: Manufacturer's standard yellow.

2.2 SOURCE QUALITY CONTROL

A. Testing of Coating Materials: Owner reserves the right to invoke the following procedure:

1. Owner will engage the services of a qualified testing agency to sample coating materials. Contractor will be notified in advance and may be present when samples are taken. If coating materials have already been delivered to Project site, samples may be taken at Project site. Samples will be identified, sealed, and certified by testing agency.
2. Testing agency will perform tests for compliance with product requirements.
3. Owner may direct Contractor to stop applying coatings if test results show materials being used do not comply with product requirements. Contractor shall remove noncomplying coating materials from Project site, pay for testing, and recoat surfaces coated with rejected materials. Contractor will be required to remove rejected materials from previously coated surfaces if, on recoating with complying materials, the two coatings are incompatible.

PART 3 - EXECUTION

3.1 EXAMINATION

A. Examine substrates and conditions, with Applicator present, for compliance with requirements for maximum moisture content and other conditions affecting performance of the Work.

B. Verify suitability of substrates, including surface conditions and compatibility, with existing finishes and primers.

C. Proceed with coating application only after unsatisfactory conditions have been corrected.

1. Application of coating indicates acceptance of surfaces and conditions.

3.2 PREPARATION

A. Clean substrates of substances that could impair bond of coatings, including dust, dirt, oil, grease, and incompatible paints and encapsulants.

1. Remove incompatible primers and reprime substrate with compatible primers or apply tie coat as required to produce coating systems indicated.

B. Steel Substrates: Remove rust, loose mill scale, and shop primer if any. Clean using methods recommended in writing by paint manufacturer, but not less than the following:

1. SSPC-SP 3/NACE No. 5 (for interior non-exposed conditions).

C. Shop-Primed Steel Substrates: Clean field welds, bolted connections, and areas where shop paint is abraded. Paint exposed areas with the same material as used for shop priming to

comply with SSPC-PA 1 for touching up shop-primed surfaces.

D. Field erection/handling of coated steel member shall be in accordance with AISC for handling and erecting a finished product. Off set thermal barrier coated steel on dunnage to minimize damage.

3.3 APPLICATION

A. Apply coatings according to manufacturer's written instructions.

1. Use applicators and techniques suited for coating and substrate indicated.
2. Do not apply coatings over labels of independent testing agencies or equipment name, identification, performance rating, or nomenclature plates.

B. Apply coatings to produce surface films without cloudiness, spotting, holidays, laps, brush marks, runs, sags, ropiness, or other surface imperfections. Produce sharp glass lines and color breaks.

C. Apply thermal barrier coating to steel members 18 inches from the exterior of the building façade and continuously back the width of the wall section; plus 6 inches to the warm side of the wall section to the interior of the building past the air/vapor barrier to the inside of the wall cavity.

D. Apply coating at maximum 80 mils per wet film thickness (WFT) per lift, 250 mils DFT. Subsequent coats are applied until final DFT is achieved for required R-value specified.

1. Coat all thermal break locations as indicated on the Drawings to an R value of 1.0.

3.4 FIELD QUALITY CONTROL

A. Dry Film Thickness Testing: Owner may engage the services of a qualified testing and inspecting agency to inspect and test coatings for dry film thickness.

1. The fluid applied Thermal Break material inspection and testing shall be performed 24 hours after completion of final application coat.
2. The results of the above tests shall be made available to all parties at the completion of each pre-designated area and approval.
3. In-place material not in compliance with desired R Values the specification requirements shall be corrected prior to final approval.
4. The dry film thickness (DFT) of the applied material shall be measured with a non-destructive coating thickness gage after material has completely cured. All measurements shall be documented in writing and furnished to the Owner.

3.5 CLEANING AND PROTECTION

A. At end of each workday, remove rubbish, empty cans, rags, and other discarded materials from Project site.

B. After completing coating application, clean spattered surfaces. Remove spattered coatings by washing, scraping, or other methods. Do not scratch or damage adjacent finished surfaces.

C. Protect work of other trades against damage from coating operation. Correct damage to work of other trades by cleaning, repairing, replacing, and recoating, as approved by Architect, and leave in an undamaged condition.

D. At completion of construction activities of other trades, touch up and restore damaged or defaced coated surfaces.

3.6 THERMAL INSULATING COATING SCHEDULE

A. Steel Substrates:

1. Primer: Shop applied by Division 05 Section Structural Steel Framing.

a. Tnemec Series 394 PerimePrime at 2.5-3.5 mils DFT

2. Thermal Insulating Coating: Field applied.

a. Tnemec Series 971 Aerolon applied at 80 mils WFT per lift, 250 mils DFT on beams.

END OF SECTION 09 97 13

DIVISION 10

SECTION 10 12 00 - DISPLAY CASES

PART 1 - GENERAL

1.1 SUMMARY

A. Section Includes:

1. Bulletin boards.

1.2 DEFINITIONS

A. Bulletin Board: Glazed cabinet with tackboard panel, without shelves, typically of shallow depth for display of paper documents.

1.3 ACTION SUBMITTALS

A. Product Data Submittals: For Bulletin Boards.

1. Include construction details, material descriptions, dimensions of individual components and profiles, and finishes for bulletin boards. Include furnished specialties and accessories.

1.4 FIELD CONDITIONS

A. Environmental Limitations: Do not deliver or install bulletin boards for indoor installations until spaces are enclosed and weathertight, wet-work in spaces is complete and dry, work above ceilings is complete, and temporary HVAC system is operating and maintaining ambient temperature and humidity conditions at occupancy levels during the remainder of the construction period.

PART 2 - PRODUCTS

2.1 PERFORMANCE REQUIREMENTS

A. Surface-Burning Characteristics: Comply with ASTM E84; testing by a qualified testing agency. Identify products with appropriate markings of applicable testing agency.

2.2 BULLETIN BOARDS

A. Mooreco Enclosed Bulletin Board or approved equal.

B. General: Factory-fabricated unit consisting of manufacturer's standard wall-mounted cabinet with tackboard panel on back inside surface and operable glazed doors at front.

1. Frame and Cabinet Profile: Square frame section with square cabinet corners.
2. Mounting: Surface mounted.

3. Size: 36” H x 30” W

C. Aluminum-Framed Cabinet: Extruded aluminum; with clear anodic finish.

D. Glazed Hinged Doors: Tempered glass; set in frame matching cabinet material and finish. Equip each door with full-height continuous hinge and cylinder lock with two keys.
1. Number of Doors: One.

E. Back Panel: Manufacturer's standard natural-cork tackboard panel.

2.3 FABRICATION

A. Fabricate bulletin boards to requirements indicated for dimensions, design, and thickness and finish of materials.

B. Use metals and shapes of thickness and reinforcing required to produce flat surfaces, and to impart strength for size, design, and application indicated.

C. Fabricate cabinets and door frames with reinforced corners, mitered to a hairline fit, with no exposed fasteners.

D. Fabricate shelf standards plumb and at heights to align shelf brackets for level shelves.

2.4 GENERAL FINISH REQUIREMENTS

A. Comply with NAAMM/NOMMA AMP 500 for recommendations for applying and designating finishes.

B. Protect mechanical finishes on exposed surfaces from damage by applying a strippable, temporary protective covering before shipping.

C. Appearance of Finished Work: Noticeable variations in same piece are unacceptable. Variations in appearance of adjoining components are acceptable if they are within the range of approved Samples and are assembled or installed to minimize contrast.

2.5 ALUMINUM FINISHES

A. Clear Anodic Finish: AAMA 611, AA-M12C22A31, Class II, 0.010 mm or thicker.

PART 3 - EXECUTION

3.1 EXAMINATION

A. Examine walls, with Installer present, for compliance with requirements for installation tolerances, surface conditions of wall, and other conditions affecting performance of the Work.

B. Examine roughing-in for electrical power systems to verify actual locations of connections before installation of illuminated units.

C. Examine walls and partitions for proper backing for bulletin boards.

D. Examine walls and partitions for suitable framing depth if recessed units will be installed.

E. Proceed with installation only after unsatisfactory conditions have been corrected.

3.2 INSTALLATION

A. General: Install units in locations and at mounting heights indicated on Drawings, or if not indicated, at heights indicated below. Keep perimeter lines straight, level, and plumb. Provide grounds, clips, backing materials, adhesives, brackets, anchors, trim, and accessories necessary for complete installation.

B. Bulletin Boards: Attach units to wall surfaces with concealed clips, hangers, or grounds.

3.3 ADJUSTING AND CLEANING

A. Adjust doors to operate smoothly without warp or bind and so contact points meet accurately. Lubricate operating hardware as recommended in writing by manufacturer.

B. Touch up factory-applied finishes to restore damaged areas.

END OF SECTION 10 12 00

SECTION 10 14 00 - SIGNAGE

PART 1 - GENERAL

1.01 RELATED DOCUMENTS

A. The Contractor, Subcontractors, and/or suppliers providing goods or services referenced in or related to this Section shall also be bound by the Documents identified in Division 01 Section “Summary of Work.”

1.02 SUMMARY

A. This Section includes the following:

1. Panel signs.
2. Cast Aluminum Letters & Graphics

1.03 ACTION SUBMITTALS

A. Product Data: For each type of product indicated.

B. Shop Drawings: Show fabrication and installation details for signs.

1. Include fabrication and installation details and attachments to other work.
2. Show sign mounting heights, locations of supplementary supports to be provided by others, and accessories.
3. Provide message list, typestyles, graphic elements, including tactile characters and Braille, and layout for each sign.

C. Samples for Initial Selection: For each type of sign material indicated that involves color selection.

1. Include representative Samples of available typestyles and graphic symbols.

D. Samples for Verification: For each of the following products and for the full range of color, texture, and sign material indicated, of sizes indicated:

1. Panel Signs: Not less than 12 inches square.

E. Sign Schedule: Use same designations indicated on Drawings.

1.04 INFORMATIONAL SUBMITTALS

A. Qualification Data: For fabricator.

B. Warranty: Special warranty specified in this Section.

1.05 CLOSEOUT SUBMITTALS

A. Maintenance Data: For signs to include in maintenance manuals.

1.06 QUALITY ASSURANCE

A. Fabricator Qualifications: Shop that employs skilled workers who custom-fabricate products similar to those required for this Project and whose products have a record of successful in-service performance.

B. Source Limitations for Signs: Obtain each sign type indicated from one source from a single manufacturer.

C. Regulatory Requirements: Comply with handicapped accessibility requirements of the 2010 ADA Standards and ICC/ANSI A117.1.

1.07 COORDINATION

A. Coordinate placement of anchorage devices with templates for installing signs.

1.08 WARRANTY

A. Special Warranty: Manufacturer's standard form in which manufacturer agrees to repair or replace components of signs that fail in materials or workmanship within specified warranty period.

1. Warranty Period: 5 years from date of Substantial Completion.

PART 2 - PRODUCTS

2.01 PANEL SIGNS

A. Basis-of-Design Product: Subject to compliance with requirements, provide **ASI Sign Systems** or a comparable product by one of the following:

1. Advance Corporation; Braille-Tac Division.
2. Best Sign Systems, Inc.
3. Mohawk Sign Systems, Inc.
4. Southwell Co. (The)

B. Interior Panel Signs: Provide smooth sign panel surfaces constructed to remain flat under installed conditions within a tolerance of plus or minus 1/16 inch measured diagonally from corner to corner, complying with the following requirements:

1. Provide manufacturer’s standard one-piece construction:

a. Phenolic-Backed Photopolymer Sheet: Provide light-sensitive, water-wash photopolymer face layer bonded to a phenolic base layer to produce a composite sheet with overall, face-layer, and base-layer thickness of 1/8-inch; and a Type D Shore durometer hardness of 80.

2. Edge Condition: Square cut.
3. Corner Condition: Square.

4. Mounting: Unframed.

    a. Wall mounted with mechanical fasteners or two-face tape required by substrate.

5. Color: Custom, to match Architect's sample.
6. Font: As selected by Architect from manufacturer's full range.
7. Character proportion: Width to height ratio between 3:5 and 1:1, and a stroke-width-to-height ratio between 1:5 and 1:10.
8. Size of characters and symbols:

    a. Room numbers: 1-1/4-inch.
    b. Room letters: 5/8-inch minimum.

9. Pictograms: Accompanied by the equivalent verbal description placed directly below the pictogram. The border dimension of the pictogram to be no less than 6 inches in height.
10. Finish and Contrast: Characters, symbols and background to be matte or other non-glare finish. Characters and symbols to be in contrasting color to the background; either light characters on a dark background or dark characters on a light background.
11. Tactile Characters: Characters and Grade 2 Braille raised 1/32 inch above surface with contrasting colors. Glue-on characters or etched backgrounds are not permitted.

    a. Manufacturer's standard process for producing text and symbols complying with ICC/ANSI A117.1 and 2010 ADA Standards. Produce precisely formed characters with square-cut edges free from burrs and cut marks; Braille dots with domed or rounded shape.
    b. Braille to be separated from corresponding raised characters or symbols by 1/2-inch.

C. Panel Sign Schedule: Provide symbols indicated and Grade 2 Braille at each sign.

1. Sign Type: ROOM ID.

    a. Text: Room number and function, including ADA symbol.
    b. Quantity: One at each interior entrance door to toilet room, as indicated.

2. Sign Type: EXIT.

    a. Text: EXIT, including ADA symbol.
    b. Quantity: One adjacent to each door to an exit passageway, and the exit discharge, as indicated.

2.02 CAST ALUMINUM LETTERS & GRAPHICS

A. Basis-of-Design Product: Impact Architectural Signs or a comparable product.

B. Cast letters/numbers

1. Materials:

    a. Aluminum - #514 aluminum alloy, clear Anodized

2. Dimensions

    a. Height: Refer to the drawings

    b. Thickness: 1" Deep

3. Font

    a. Univers 75 Black

C. Graphics

a. RIPTA Logo – graphic information to be provided.

b. Laser cut aluminum

c. Powder coated: colors per RIPTA brand

D. Mounting

1. Cast metal letters are tapped for threaded stud insertion.

2.03 ACCESSORIES

A. Anchors and Inserts: Provide nonferrous-metal or hot-dip galvanized anchors and inserts for exterior installations and elsewhere as required for corrosion resistance. Use toothed steel or lead expansion-bolt devices for drilled-in-place anchors.

B. Two-Face Tape: Manufacturer's standard high-bond, foam-core tape, 0.045 inch thick, with adhesive on both sides.

2.04 FABRICATION

A. General: Provide manufacturer's standard signs of configurations indicated.

2.05 FINISHES, GENERAL

A. Appearance of Finished Work: Variations in appearance of abutting or adjacent pieces are acceptable if they are within one-half of the range of approved Samples. Noticeable variations in the same piece are not acceptable. Variations in appearance of other components are acceptable if they are within the range of approved Samples and are assembled or installed to minimize contrast.

PART 3 - EXECUTION

3.01 EXAMINATION

A. Examine substrates, areas, and conditions, with Installer present, for compliance with requirements for installation tolerances and other conditions affecting performance of signage work.

B. Verify that sign-support surfaces are within tolerances to accommodate signs without gaps or irregularities between backs of signs and support surfaces unless otherwise indicated.

C. Verify that anchor inserts are correctly sized and located to accommodate signs.

D. Proceed with installation only after unsatisfactory conditions have been corrected.

3.02 INSTALLATION

A. Locate signs and accessories where indicated, using mounting methods of types described and complying with manufacturer's written instructions.

1. Install signs level, plumb, true to line, and at locations and heights indicated, with sign surfaces free of distortion and other defects in appearance.
2. Before installation, verify that sign surfaces are clean and free of materials or debris that would impair installation.
3. Corrosion Protection: Coat concealed surfaces of exterior aluminum in contact with grout, concrete, masonry, wood, or dissimilar metals, with a heavy coat of bituminous paint.
4. Interior Wall Signs: Install signs on walls adjacent to latch side of door where applicable. Where not indicated or possible, such as double doors, install signs on nearest adjacent walls.

    a. Locate sign with baseline of the lowest tactile character (Braille) 48” minimum above finish floor and the baseline of the highest tactile character not more than 60” above finish floor.
    b. Locate signs so that clear floor area 18 inches minimum by 18 inches minimum centered on the tactile character, is provided beyond the arc of any door swing between the closed position and 45 degree open position.
    c. At double doors with two active leafs, mount sign on wall to the right hand side of the door. At double doors with one inactive leaf, mount sign on inactive leaf unless otherwise indicated.

B. Wall-Mounted Signs: Comply with sign manufacturer's written instructions except where more stringent requirements apply.

1. Mechanical Fasteners: Use nonremovable mechanical fasteners placed through predrilled holes. Attach signs with fasteners and anchors suitable for secure attachment to substrate as recommended in writing by sign manufacturer.
2. Two-Face Tape: Clean bond-breaking materials from substrate surface and remove loose debris. Apply tape strips symmetrically to back of sign and of suitable quantity to support weight of sign without slippage. Keep strips away from edges to prevent visibility at sign edges. Place sign in position, and push to engage tape adhesive.

    a. Mount signs to glass only. Do not use this method for any other substrate.

3. Signs Mounted on Glass: Provide matching opaque plate on opposite side of glass to conceal mounting materials.

3.03 ADJUSTING AND CLEANING

A. Remove and replace damaged or deformed signs and signs that do not comply with specified requirements. Replace signs with damaged or deteriorated finishes or components that cannot be successfully repaired by finish touchup or similar minor repair procedures.

B. Remove temporary protective coverings and strippable films as signs are installed.

C. On completion of installation, clean exposed surfaces of signs according to manufacturer's written instructions, and touch up minor nicks and abrasions in finish. Maintain signs in a clean condition during construction and protect from damage until acceptance by Owner.

END OF SECTION 10 14 00

SECTION 10 21 00 - TOILET COMPARTMENTS

PART 1 GENERAL

1.1 SECTION INCLUDES

A. Solid plastic toilet compartments including the following:
   1. Floor-to-ceiling toilet compartments.
   2. Privacy screens.

1.2 RELATED SECTIONS

A. Section 05 50 00 - Metal Fabrications.

B. Section 06 10 00 - Rough Carpentry.

1.3 REFERENCES

A. ASTM A666 - Standard Specification for Stainless and Heat-Resisting Chromium-Nickel Steel Plate, Sheet, and Strip.

B. ASTM B221 - Standard Specification for Aluminum and Aluminum-Alloy Extruded Bars, Rods, Wire, Profiles, and Tubes.

C. ASTM E84 - Standard Test Method for Surface Burning Characteristics of Building Materials.

D. National Fire Protection Association (NFPA) 286 - Standard Methods of Fire Tests for Evaluating Contribution of Wall and Ceiling Interior Finish to Room Fire Growth.

E. United States EPA (Environmental Protection Agency) Registration - Bactericidal Surfaces Registered with the U.S. EPA to Legally Make Claims that these Materials Kill Infectious Bacteria.

1.4 SUBMITTALS

A. Submit under provisions of Section 01 30 00.

B. Product Data: Manufacturer's data sheets on each product to be used, including:
   1. Preparation instructions and recommendations.
   2. Storage and handling requirements and recommendations.
   3. Installation methods.

C. Shop Drawings: Provide layout drawings and installation details with location and type of hardware required.

D. Verification Samples: For each finish product specified, two samples representing actual product, color, and patterns.

1.5 QUALITY ASSURANCE

A. Manufacturer Qualifications: A company regularly engaged in manufacture of products specified in this section, and whose products have been in satisfactory use under similar service conditions for not less than 5 years.

B. Installer Qualifications: A company regularly engaged in installation of products specified in this Section, with a minimum of 5 years experience.

C. Materials: Doors, panels and pilasters, constructed from high density polyethylene (HDPE) resins. Partitions to be fabricated from polymer resins compounded under high pressure, forming a single component which is waterproof, nonabsorbent and has a self-lubricating surface that resists marks from pens, pencils, markers and other writing instruments. Cover all plastic components with a protective plastic masking.

D. Performance Requirements:
   1. Fire Resistance: Partition materials shall comply with the following requirements, when tested in accordance with ASTM E 84, Class B:
      a. Tested to Meet ASTM E84, Class B flame spread/smoke developed rating.
   2. Material Fire Ratings:
      a. National Fire Protection Association (NFPA) 286: Pass.
      b. International Code Council (ICC): Class B.
   3. Antimicrobial Touch Surfaces: Hardware touch surfaces shall be manufactured from substrates that are registered with the U.S. EPA to kill specific bacteria tested according to U.S. EPA protocols.

1.6 DELIVERY, STORAGE, AND HANDLING

A. Store products in manufacturer's unopened packaging until ready for installation.

1.7 PROJECT CONDITIONS

A. Maintain environmental conditions (temperature, humidity, and ventilation) within limits recommended by manufacturer for optimum results. Do not install products under environmental conditions outside manufacturer's absolute limits.

1.8 WARRANTY

A. Manufacturer guarantees its plastic against breakage, corrosion, and delamination under normal conditions for 25 years from the date of receipt by the customer. If materials are found to be defective during that period for reasons listed above, the materials will be replaced free of charge. Labor not included in warranty.

PART 2 PRODUCTS

2.1 MANUFACTURERS

A. Basis of Design Manufacturer: Scranton Products, which is located at: 801 E. Corey St.; Scranton, PA 18505; ASD Toll Free Tel: 800-445-5148; Fax: 855-376-6161; Email:request info (info@scrantonproducts.com); Web:https://www.scrantonproducts.com
   1. Fabricator: Santana Toilet Partitions.
   2. Fabricator: Comtec Toilet Partitions.
   3. Fabricator: Capitol Toilet Partitions.

B. Alternate: Bradley Corporation HDPE partitions

C. Approved Equals.

D. Requests for substitutions will be considered in accordance with provisions of Section 01 60 00 - Product Requirements.

2.2 MATERIAL

A. Plastic Panels: High density polyethylene (HDPE) suitable for exposed applications,

waterproof, non-absorbent, and graffiti-resistant textured surface.
1. Recycled Content; Post Industrial: 25 percent.
2. Recycled Content; Post Industrial: 100 percent.
3. Recycled Content; Post Consumer: 100 percent.

B. Zinc Aluminum Magnesium and Copper Alloy (Zamac): ASTM B 86.

C. Stainless Steel Castings: ASTM A167, Type 304.

D. Aluminum: ASTM 6463-T5 alloy.

2.3 SOLID PLASTIC TOILET COMPARTMENTS

A. Basis of Design: Hiny Hiders Toilet Partitions as manufactured by and supplied by Scranton Products.
1. Style: Floor-to-ceiling toilet compartments.

B. Doors, Panels, and Pilasters: 1 inch (25 mm) thick with all edges rounded to a radius. Mount doors and dividing panels based on height of specified system.
1. Door and Panel Height: 66 inches (1676 mm).
2. Aluminum heat sink fastened to bottom edges.
3. Door Design: Flat panel.
4. Panel Edge: Standard.

C. Panel Color:
1. Charcoal Grey - Orange Peel.

D. Pilaster Shoes: 3 inches (76 mm), 20 gauge stainless steel. Secured to pilasters with a stainless steel tamper resistant Torx head sex bolt.

E. Pilaster Shoes: 3 inches (76 mm) high one-piece molded HDPE. Secured to pilasters with a stainless steel tamper resistant Torx head sex bolt.
1. Pilaster Plastic Shoe Color: Grey.
2. Pilaster Plastic Shoe Color: Silver (Matches Stainless/Aluminum Hardware).

F. Headrail: Heavy-duty extruded 6463-T5 alloy aluminum with anti-grip design. Finish to be clear anodized. Fastened to headrail brackets with stainless steel tamper resistant Torx head sex bolt, and fastened at the top of the pilaster with stainless steel tamper resistant Torx head screws.
1. Headrail Brackets: 20 gauge stainless steel with satin finish. Secured to the wall with stainless steel tamper resistant Torx head screws.

G. Wall Brackets:
1. Stainless Steel Brackets: Stainless steel type 201.
2. Brackets are fastened to pilasters with stainless steel tamper resistant Torx head screws and fastened to the panels with stainless steel tamper resistant Torx head sex bolts.
3. Bracket Type: Stirrup stainless steel double ear.

H. Door Hardware:
1. Continuous Stainless Steel Helix Hinge:
a. Length: 54 inches (1372 mm).
2. Door Strike/Keeper: Heavy-duty extruded aluminum 6436-T5 alloy with a clear anodized finish. Secured to pilasters with stainless steel tamper resistant Torx head sex bolts. Bumper shall be made of extruded black vinyl.
a. Style: 6 inches (152 mm) aluminum.
b. Style: 54 inches (1372 mm) aluminum.

c. Style: 65 inches (1651 mm) aluminum.
d. Style: 3 inches (76 mm) stainless steel emergency access.

3. Latch Mechanism: Healthy Hardware Slide Bolt, Pulls and Coat Hook: Made from U.S. EPA registered materials by manufacturer currently holding U.S. EPA Company Number, U.S. EPA Establishment Number and California Broker's License. Satin finish.
4. Latch Mechanism: Aluminum Slide Bolt Latch and Housing: Heavy-duty extruded 6463-T5 alloy aluminum. Latch and housing to have a clear anodized finish. Slide bolt and button to have a black anodized finish.
5. Latch Mechanism: Stainless Steel Slide Bolt Latch and Housing: Heavy-duty stainless steel type 304. The latch and housing to have a bright finish. The slide bolt and button to have a black anodized finish.
6. Latch Mechanism: Occupancy Indicator Latch and Housing:
   a. Material: Satin stainless steel.
   b. Occupancy indicators: Green for occupied and red not occupied.
   c. Slide bolt and button.
7. Doors supplied with one coat hook/bumper and door pull, clear anodized aluminum or stainless steel.
8. Equip outswing handicapped doors with second door pull and door stop.

2.4 SOLID PLASTIC PRIVACY SCREENS

A. Provide plastic privacy screens in urinal and entry toilet room applications as indicated or scheduled.

B. Panels, and pilasters, if required, 1 inch (25 mm) thick with edges rounded to a radius. Screens to be mounted at 14 inches (356 mm) above the finished floor. Color as selected by Architect from manufacturer's full line of current colors.
   1. Aluminum heat sink fastened to bottom edges.
   2. Recycled Content: Minimum 25 percent.

C. Screen Type: Wall mounted.
   1. Urinal Screens: 24 inches (610 mm) wide by 42 inches (1067 mm) high.
   2. Urinal Screens: 24 inches (610 mm) wide by 55 inches (1397 mm) high.
   3. Pilaster Shoes: One-piece molded HDPE secured to the pilaster with a stainless steel tamper resistant Torx head sex bolt.
      a. Pilaster Shoes Color: Mocha.
      b. Pilaster Shoes Color: Black.
      c. Pilaster Shoes Color: Grey.
      d. Pilaster Shoes Color: Linen.
      e. Pilaster Shoes Color: Beige.
      f. Pilaster Shoes Color: Blueberry.
      g. Pilaster Shoes Color: Silver; matches clear anodized hardware.

D. Wall Brackets: Extruded PVC plastic. Fastened to the panel/pilaster with stainless steel tamper resistant torx head screws and fastened to wall with stainless steel tamper resistant torx head sex bolts.
   1. Length of Wall Brackets: 41 inches (1041 mm).
   2. Bracket Color: Grey.

E. Aluminum Slide Bolt Latch and Housing: Heavy-duty extruded 6463-T5 alloy aluminum. Latch and housing to have a clear anodized finish. Slide bolt and button to have a black anodized finish.

PART 3 EXECUTION

3.1 EXAMINATION

A. Do not begin installation until substrates have been properly prepared.

B. If substrate preparation is the responsibility of another installer, notify Architect of unsatisfactory preparation before proceeding.

3.2 PREPARATION

A. Clean surfaces thoroughly prior to installation.

B. Prepare surfaces using the methods recommended by the manufacturer for achieving the best result for the substrate under the project conditions.

C. Examine areas to receive toilet partitions, screens, and shower compartments for correct height and spacing of anchorage/blocking and plumbing fixtures that affect installation of partitions. Report discrepancies to the architect.

3.3 INSTALLATION

A. Install in accordance with manufacturer's instructions.

B. Install partitions rigid, straight, plumb, and level manor, with plastic laid out as shown on shop drawings.

C. Clearance at vertical edges of doors shall be uniform top to bottom and shall not exceed 3/8 inch (9.5 mm).

D. No evidence of cutting, drilling, and/or patching shall be visible on the finished work.

E. Finished surfaces shall be cleaned after installation and be left free of imperfections.

3.4 PROTECTION

A. Protect installed products until completion of project.

B. Touch-up, repair or replace damaged products before Substantial Completion.

END OF SECTION 10 21 00

SECTION 10 28 00 - TOILET AND BATH ACCESSORIES

PART 1 - GENERAL

1.01 RELATED DOCUMENTS

A. The Contractor, Subcontractors, and/or suppliers providing goods and services referenced in or related to this Section shall also be bound by the Related Documents identified in Division 01 Section “Summary of Work.”

1.02 SUMMARY

A. This Section includes the following:

1. Washroom accessories.
2. Custodial accessories.

B. Related Sections include the following:

1. Division 06 Section “Miscellaneous Rough Carpentry” for wood blocking.
2. Division 22 Section “Plumbing” for underlavatory guards and sinks.
3. Division 26 Electrical Sections.

1.03 ACTION SUBMITTALS

A. Product Data: For each type of product indicated. Include the following:

1. Construction details and dimensions.
2. Anchoring and mounting requirements, including requirements for cutouts in other work and substrate preparation.
3. Material and finish descriptions.
4. Features that will be included for Project.

B. Product Schedule: Indicating types, quantities, sizes, and installation locations by room of each accessory required.

1. Identify locations using room designations indicated on Drawings.
2. Identify products using designations indicated on Drawings.

1.04 INFORMATIONAL SUBMITTALS

A. Warranty: Sample of special warranty.

1.05 CLOSEOUT SUBMITTALS

A. Maintenance Data: For toilet and bath accessories to include in maintenance manuals.

1.06 QUALITY ASSURANCE

A. Source Limitations: For products listed together in the same articles in Part 2, provide products of same manufacturer unless otherwise approved by Architect.

B. Accessibility: Comply with applicable provisions in ICC/ANSI A117.1 and the 2010 ADA Standards.

C. Electrical Components, Devices, and Accessories: Listed and labeled as defined in NFPA 70, Article 100, by a testing agency acceptable to authorities having jurisdiction, and marked for intended use.

1.07 COORDINATION

A. Coordinate accessory locations with other work to prevent interference with clearances required for access by people with disabilities, and for proper installation, adjustment, operation, cleaning, and servicing of accessories.

B. Deliver inserts and anchoring devices set into concrete or masonry as required to prevent delaying the Work.

1.08 WARRANTY

A. Special Mirror Warranty: Manufacturer's standard form in which manufacturer agrees to replace mirrors that develop visible silver spoilage defects and that fail in materials or workmanship within specified warranty period.

1. Warranty Period: 15 years from date of Substantial Completion.

B. Warm Air Dryer Warranty: Manufacturer's standard form in which manufacturer agrees to replace all parts, except motor brushes, of warm air dryers that fail in materials or workmanship within specified warranty period.

1. Warranty Period: 5 years from date of Substantial Completion.

PART 2 - PRODUCTS

2.01 MATERIALS

A. Stainless Steel: ASTM A 666, Type 304, 0.0312-inch minimum nominal thickness, unless otherwise indicated.

B. Steel Sheet: ASTM A 1008/A 1008M, Designation CS (cold rolled, commercial steel), 0.0359-inch minimum nominal thickness.

C. Fasteners: Screws, bolts, and other devices of same material as accessory unit and tamper-and-theft resistant where exposed, and of galvanized steel where concealed.

D. Mirrors: ASTM C 1503, Mirror Glazing Quality, clear-glass mirrors, nominal 6.0 mm thick.

2.02 MANUFACTURERS

A. Basis-of-Design Products: Subject to compliance with requirements, provide products indicated by **Bobrick Washroom Equipment, Inc.** or a comparable product by one of the following:

1. AJW.
2. American Specialties, Inc.
3. Bradley Corporation.

2.03 WASHROOM ACCESSORIES

A. Mirror Unit (**A**): Typical.

1. Basis-of-Design Product: **Bobrick; B-290 Series**.
2. Frame: Stainless-steel angle, 0.05 inch thick, 3/4 inch x 3/4 inch angle with vertical-grain satin finish, one-piece roll-formed construction.

   a. Corners: Welded and ground smooth.
   b. Backing: Galvanized steel fastened to frame with concealed screws and equipped with integral horizontal hanging brackets near the top and bottom of the mirror.

3. Hangers: Produce rigid, tamper- and theft-resistant installation, using method indicated below.

   a. Wall bracket of 20 gauge galvanized steel, equipped with concealed locking devices requiring a special tool to remove.

4. Mirror: No. 1 quality, 1/4-inch select float glass, with all edges protected by plastic filler strips. Provide protective backing of full-size, shock absorbing, water resistant, nonabrasive, 3/16-inch thick polyethylene padding.
5. Size: Refer to elevations.

A. Semi-Recessed Waste Receptacle:
   1. Basis of Design: Bobrick;
   2. Material: 20-gauge, 300 series stainless steel.
      a. Finish: Brushed No. 3 satin finish.
   3. Construction: Welded, D-shape.
   4. Bag Retention Ring: Holds liners in place and can serve as a handle.

B. Grab Bar (**H,I**):

1. Basis-of-Design Product: **Bobrick; B-6806.99 Series**.
2. Mounting: Flanges with concealed fasteners.
3. Material: Stainless steel, 18 gauge.

a. Finish: Smooth, No. 4, satin finish on ends and slip-resistant texture in grip area.

4. Outside Diameter: 1-1/2 inches.
5. Configuration and Length: Provide in straight lengths, in sizes indicated.

2.04 TOILET PAPER DISPENSERS

A. Toilet Paper Dispensers: Surface-mounted Multi-roll Toilet Tissue Dispenser
1. Basis of Design: Bobrick Classic Series – B-2888.

2.05 SEAT COVER DISPENSERS

A. Seat Cover Dispenser: Surface mounted seat-cover dispenser.
1. Basis of Design: Bobrick Classic Series – B-221.

2.06 NAPKIN DISPOSAL UNITS

A. Surface-mounted Sanitary Napkin Disposal Unit:
1. Basis of Design: Bobrick, Contura Series – B-270

2.07 HOOKS

A. Wall Hook: Surface-mounted Clothes Hooks.
1. Basis of Design: Bobrick – B-233. Single hook.

2.08 BABY CHANGING STATIONS

A. Surface-mounted baby changing station
1. Basis of Design: Koala Kare – KB300.
a. Color: Grey 01

2.09 CUSTODIAL ACCESSORIES

A. Mop and Broom Holder:

1. Basis-of-Design Product: **Bobrick; B-223**.
2. Length: 24 inches.
3. Hooks: Three.
4. Mop/Broom Holders: Three, spring-loaded, rubber hat, cam type.
5. Material and Finish: Stainless steel, No. 4 finish (satin).

2.10 FABRICATION

A. General: Fabricate units with tight seams and joints, and exposed edges rolled. Hang doors and access panels with full-length, continuous hinges. Equip units for concealed anchorage and with corrosion-resistant backing plates.

B. Keys: Provide universal keys for internal access to accessories for servicing and resupplying. Provide minimum of six keys to Owner.

PART 3 - EXECUTION

3.01 INSTALLATION

A. Install accessories according to manufacturers' written instructions, using fasteners appropriate to substrate indicated and recommended by unit manufacturer. Install units level, plumb, and firmly anchored in locations and at heights indicated.

B. Grab Bars: Install to withstand a downward load of at least 250 lbf, when tested according to method in ASTM F 446.

3.02 ADJUSTING AND CLEANING

A. Adjust accessories for unencumbered, smooth operation. Replace damaged or defective items.

B. Remove temporary labels and protective coatings.

C. Clean and polish exposed surfaces according to manufacturer's written recommendations.

END OF SECTION 10 28 00

SECTION 10 44 13 - FIRE PROTECTION CABINETS

PART 1 - GENERAL

1.1 RELATED DOCUMENTS

A. Drawings and general provisions of the Contract, including General and Supplementary Conditions and Division 01 Specification Sections, apply to this Section.

1.2 SUMMARY

A. Section Includes:

1. Fire-protection cabinets for portable fire extinguishers.

B. Related sections include the following:

1. Division 06 Section "Rough Carpentry"
2. Division 07 Section “Joint Sealants”
3. Division 09 Section "Gypsum Board System"
4. Division 10 Section “Fire Extinguishers”

1.3 ACTION SUBMITTALS

A. Product Data:

1. Cabinets: Materials description for fire extinguisher cabinets include roughing-in dimensions, details showing mounting methods, relationships to surrounding construction, door hardware, cabinet type and materials, trim style and door construction, door style and materials.
2. Extinguishers: Materials description for fire extinguishers; include ratings and classifications.
3. Installation instructions for each product specified.

B. Shop Drawings:

1. Small-scale plans showing locations of fire extinguisher cabinets and individual fire extinguishers.
2. Schedules showing each type of cabinet and extinguisher to ensure proper fit and function.
3. Indicate installation procedures and accessories required for a complete installation.

C. Samples:

1. Extinguisher Cabinet Door and Trim Finishes: For each type of exposed finish required, prepared on samples of size indicated below:
   a. Size: 6 inches (150 mm) square.

1.4 INFORMATIONAL SUBMITTALS

1.5 Warranty: Sample of special warranty.

1.6 QUALITY ASSURANCE

A. Provide fire extinguishers, cabinets and accessories produced by a single manufacturer.

B. Install all cabinets in compliance with the reach requirements specified in the ANSI A117.1 and Americans with Disabilities Act, and in spaces that are deemed accessible in accordance with this Act.

C. Fire Rated, Fire Protection Cabinets: Listed and labeled to comply with requirements in ASTM E814 for fire resistance rating of walls where they are installed.

D. Electrical Components, Devices, and Accessories: Listed and labeled as defined in NFPA 70, by a qualified testing agency, and marked for intended location and application.

1.7 COORDINATION

A. Coordinate size of fire-protection cabinets to ensure that type and capacity of fire extinguishers indicated are accommodated.

B. Coordinate sizes and locations of fire-protection cabinets with wall depths.

1.8 DELIVERY, STORAGE, AND HANDLING

A. Deliver, store, and handle fire protection specialties and related materials using means and methods that will prevent damage, deterioration, or loss.

1. Deliver components in manufacturer's original packaging, properly labeled for identification.

1.9 WARRANTY

A. All Fire Protection Products carry a one year warranty after date of shipment against defects in materials or workmanship. Fire extinguishers carry a longer warranty. We will replace or repair any product found defective within this period. No other warranty expressed or implied is valid. Manufacturer’s warranty, terms and conditions apply in all cases. Please see complete warranty on our website for more details.

PART 2 - PRODUCTS

2.1 MANUFACTURER

A. Provide products by the following: JL Industries, Inc., a division of Activar Construction Products Group, 9702 Newton Av S, Bloomington, MN 55431, Ph: (800) 554-6077, (952) 835-6850, Fax: (952) 835-2218, Email: sales @activarcpg.com, Website: www.activarcpg.com

B. Approved equal.

2.2 FIRE-PROTECTION CABINET

A. Cabinet with Acrylic Bubble Door: Clear Vu Series Model 1515F25

1. Cabinet Style: Recessed
2. Components:
   a. Tub (Recessed and Semi-recessed cabinets): Cold-rolled steel.
      1) Finish: Factory-applied powder coat paint finish.
         a) Standard Color: White

   b. Tub: Anodized aluminum; clear color
   c. Steel Door and Trim Construction: Flush doors with 5/8 inch (15.88 mm) door stop attached by continuous hinge and equipped with zinc-plated handle with roller catch.
      1) Cold-Rolled Steel:
         a) Finish: Factory-applied powder coat paint finish.
         b) Standard Color: White

   d. Door Style:
      1) Style F: Full glazing with pull handle.

   e. Bubble: Acrylic bubble with 2-1/2 inch (63.50 mm) application.
      1) Standard Color: 25 – Clear

   f. Trim Style and Depth:
      1) Recessed Cabinet: 3/8 inch (9.53 mm) flat trim.
      2) Trim Dimensions: 1-3/4 inch (44.45 mm) face trim on frame and 1-1/4 inch (31.75 mm) face trim on door.

PART 3 - EXECUTION

3.1 EXAMINATION

A. Examine walls and partitions for suitable framing depth and blocking where recessed and semi-recessed cabinets will be installed, and blocking where surface mounted cabinets will be installed.

1. Notify the Contractor in writing of conditions detrimental to proper and timely completion of the installation.
2. Proceed with installation only after unsatisfactory conditions have been corrected.

3.2 INSTALLATION

A. Install cabinets in locations and at mounting heights indicated, or if not indicated, at heights to comply with applicable regulations of governing authorities

1. Prepare recesses in walls for fire extinguisher cabinets as required by type and size of cabinet and style of trim and to comply with manufacturer's instructions.
2. Securely fasten mounting brackets and fire extinguisher cabinets to structure, square and plumb, to comply with manufacturer=s instructions.
3. Maintain fire ratings where cabinets are recessed into fire-rated wall systems.

B. Wall Signs:

1. Location: Where shown or directed.
2. Apply on walls after field painting is completed and has been accepted.

3.3 ADJUSTING AND CLEANING

A. Remove temporary protective coverings and strippable films, if any, as fire protection cabinets are installed unless otherwise indicated in manufacturer's written installation instructions.

B. Adjust fire protection cabinet doors to operate easily without binding. Verify that integral locking devices operate properly.

C. On completion of fire protection cabinet installation, clean interior and exterior surfaces as recommended by manufacturer.

D. Touch up marred finishes or replace fire protection cabinets that cannot be restored to factory finished appearance. Use only materials and procedures recommended or furnished by fire protection cabinet and mounting bracket manufacturers.

E. Replace fire protection cabinets that have been damaged or have deteriorated beyond successful repair by finish touchup or similar minor repair procedures.

END OF SECTION 104413

SECTION 10 44 16 - FIRE EXTINGUISHERS

PART 1 - GENERAL

1.1 RELATED DOCUMENTS

A. Drawings and general provisions of the Contract, including General and Supplementary Conditions and Division 01 Specification Sections, apply to this Section.

1.2 SUMMARY

A. Section Includes:

1. Fire extinguishers.

B. Related sections include the following:

1. Division 09 Section "Gypsum Board System"
2. Division 10 Section “Fire Protection Cabinets”

1.3 ACTION SUBMITTALS

A. Product Data:

1. Extinguishers: Materials description for fire extinguishers; include ratings and classifications.
2. Installation instructions for each product specified.

B. Shop Drawings:

1. Small-scale plans showing locations of fire extinguisher cabinets and individual fire extinguishers.
   a. Schedules showing each type of cabinet and extinguisher to ensure proper fit and function.
   b. Indicate installation procedures and accessories required for a complete installation.
      1) Size: 6 inches (150 mm) square.

1.4 INFORMATIONAL SUBMITTALS

A. Warranty: Sample of special warranty.

1.5 CLOSEOUT SUBMITTALS

A. Operation and maintenance data.

1.6 COORDINATION

A. Coordinate type and capacity of fire extinguishers with fire-protection cabinets to ensure fit and function.

1.7 QUALITY ASSURANCE

A. Provide portable fire extinguishers, brackets, and accessories manufactured by a single company.

B. Provide portable fire extinguishers that are U.L. listed and bear UL "Listing Mark" for type rating, and classification of extinguisher required by local and federal regulation for application and comply with NFPA10.

C. Provide fire extinguishers of type approved by UL, State Fire Marshal's Office, and local regulatory agencies, if any.

D. Hang all extinguishers in compliance with the reach requirements specified in the ANSI A117.1 and Americans with Disabilities Act, and in spaces that are deemed accessible in accordance with this Act.

1.8 DELIVERY, STORAGE, AND HANDLING

A. Deliver, store, and handle fire protection specialties and related materials using means and methods that will prevent damage, deterioration, or loss.

1. Deliver components in manufacturer's original packaging, properly labeled for identification

1.9 WARRANTY

A. All Fire Protection Products (except fire extinguishers) carry a one year warranty after date of shipment against defects in materials or workmanship. Fire extinguishers carry a longer warranty. We will replace or repair any product found defective within this period. No other warranty expressed or implied is valid. Manufacturer’s warranty, terms and conditions apply in all cases. Please see complete warranty on our website for more details.

PART 2 - PRODUCTS

2.1 MANUFACTURER

A. Provide products by the following: JL Industries, Inc., a division of Activar Construction Products Group, 9702 Newton Av S, Bloomington, MN 55431, Ph: (800) 554-6077, (952) 835-6850, Fax: (952) 835-2218, Email: sales @activarcpg.com, Website: www.activarcpg.com

B. Approved equal.

2.2 FIRE EXTINGUISHERS

A. Multi-Purpose Chemical Type: Extinguisher unit containing a fluidized and siliconized mono ammonium phosphate powder; nonconductive and nontoxic.
   1. Construction: Heavy duty steel cylinder with metal valve and siphon tube, O-ring seal, replaceable valve stem seal, visual pressure gage, pull pin and upright squeeze grip.
   2. Finish: Factory powder-coated; Red.
   3. Effectiveness (Rating): Class A, B, and C fires.
   4. Model Identification and UL Rating: Cosmic 10E; 4A-80BC

2.3 SPECIALTY FIRE EXTINGUISHERS

A. Liquid Chemical Type: Extinguisher unit appropriate for IT room.
   1. Construction: Heavy duty steel cylinder with metal valve and siphon tube, O-ring seal, replaceable valve stem seal, visual pressure gage, pull pin and upright squeeze grip.
   2. Finish: Factory powder-coated; Red.
   3. Effectiveness (Rating): Class B and C fires.
   4. Model Identification and UL Rating: Halotron 5B:C

2.4 SOURCE QUALITY CONTROL

A. Ship extinguishers to the Project site fully charged, EXCEPT those which contain water as an extinguishing agent, if any.

B. Obtain Fire Extinguishers and Fire Extinguisher Brackets from same manufacturer to ensure compatibility.

PART 3 - EXECUTION

3.1 EXAMINATION

A. Examine walls and partitions for suitable framing depth and blocking where recessed and semi-recessed cabinets will be installed, and blocking where surface mounted cabinets will be installed.

   1. Notify the Contractor in writing of conditions detrimental to proper and timely completion of the installation.
   2. Proceed with installation only after unsatisfactory conditions have been corrected.

3.2 INSTALLATION

A. Install cabinets in locations and at mounting heights indicated, or if not indicated, at heights to comply with applicable regulations of governing authorities.

   1. Prepare recesses in walls for fire extinguisher cabinets as required by type and size of cabinet and style of trim and to comply with manufacturer's instructions.
   2. Securely fasten mounting brackets and fire extinguisher cabinets to structure, square and plumb, to comply with manufacturer=s instructions.
   3. Maintain fire ratings where cabinets are recessed into fire-rated wall systems.

3.3 FIELD QUALITY CONTROL

A. Ensure that each extinguisher is fully charged, and that inspection of each extinguisher has been performed, as evidenced by the National Association of Fire Equipment Distributors certification tag, just prior to turnover.

END OF SECTION 10 44 16

SECTION 10 73 13 - STANDING SEAM METAL AWNINGS

PART 1 - GENERAL

1.1 SUMMARY

A. Section Includes:

1. Fixed awnings.

1.2 ACTION SUBMITTALS

A. Product Data: For each type of product.

1. Include styles, material descriptions, construction details, fabrication details, dimensions of individual components and profiles, hardware, fittings, mounting accessories, features, and finishes for awnings.
2. Include rated capacities, operating characteristics, electrical characteristics, and furnished specialties and accessories.

B. Shop Drawings:

1. Include plans, elevations, sections, mounting heights, and attachment details.
2. Detail fabrication and assembly of awnings.
3. Show locations for blocking, reinforcement, and supplementary structural support.

1.3 INFORMATIONAL SUBMITTALS

A. Welding certificates.

B. Sample Warranty: For special warranty.

1.4 CLOSEOUT SUBMITTALS

A. Operation and Maintenance Data: For awnings to include in operation and maintenance manuals.

1.5 QUALITY ASSURANCE

A. Fabricator Qualifications: Shop that employs skilled workers who custom fabricate products similar to those required for this Project and whose products have a record of successful in-service performance.

B. Installer Qualifications: Fabricator of products.

C. Welding Qualifications: Qualify procedures and personnel according to the following:

1. AWS D1.1/D1.1M, "Structural Welding Code - Steel."

2. AWS D1.2/D1.2M, "Structural Welding Code - Aluminum."

1.6 WARRANTY

A. Special Warranty: Manufacturer and fabricator agree to repair or replace components of awnings that fail in materials or workmanship within specified warranty period.

1. Failures include, but are not limited to, the following:

a. Structural failures including framework.
b. Deterioration of metals, metal finishes, and other materials beyond normal weathering.

2. Awning Warranty Period: Five years from date of Substantial Completion.

3. Finish Warranty Period: 20 year Kynar Finish

PART 2 - PRODUCTS

2.1 PERFORMANCE REQUIREMENTS

A. Thermal Movements: Allow for thermal movements from ambient and surface temperature changes.

1. Temperature Change: **120 deg F (67 deg C), ambient; 180 deg F (100 deg C)**.

2.2 AWNING FRAME AND ACCESSORY MATERIALS

A. Steel:

1. Steel Plates, Shapes, and Bars: ASTM A36/A36M.
2. Steel Tubing: ASTM A500/A500M.
3. Galvanized Steel Tubing: ASTM A787/A787M.
4. Steel Pipe: ASTM A53/A53M, Standard Weight (Schedule 40).

B. Aluminum: Alloy and temper recommended by awning manufacturer for type of use and finish indicated and with not less than the strength and durability properties of alloy and temper required by structural loads.

1. Aluminum Plate and Sheet: ASTM B209 (ASTM B209M).
2. Aluminum Extrusions: ASTM B221 (ASTM B221M).
3. Extruded Structural Pipe and Round Tubing: ASTM B429/B429M, standard weight (Schedule 40).
4. Drawn Seamless Tubing: ASTM B210 (ASTM B210M).

C. Anchors, Fasteners, Fittings, Hardware, and Installation Accessories: Complying with performance requirements indicated and suitable for exposure conditions, supporting structure, anchoring substrates, and installation methods indicated. Corrosion-resistant or noncorrodible units; weather-resistant, [**tamperproof, vandal- and theft-resistant,**]compatible, nonstaining materials. Provide as required for awning assembly, mounting, and secure attachment. Number as needed to comply with performance requirements and to maintain uniform appearance; evenly

spaced. Where exposed to view, provide finish and color as selected by Architect from manufacturer's full range.

1. Lag Bolts: ASME B18.2.1 (ASME B18.2.3.8M).
2. Zinc-Coated High-Strength Bolts, Nuts, and Washers: ASTM F3125/F3125M,Grade A325 (Grade A325M), Type 1, heavy-hex steel structural bolts; ASTM A563, Grade DH, (ASTM A563M, Class 10S) heavy-hex carbon-steel nuts; and ASTM F436/F436M, Type 1, hardened carbon-steel washers, zinc coated.
3. Expansion Anchors: Anchor bolt and sleeve assembly with capability to sustain, without failure, a load equal to six times the load imposed when installed in unit masonry assemblies and equal to four times the load imposed when installed in concrete as determined by testing according to ASTM E488 conducted by a qualified independent testing and inspecting agency.

2.3 FIXED AWNINGS

A. Acceptable Manufacturers:
   1. Awning Works Inc. Standing Seam Metal Awning
   2. Awntech Houstonian

B. Fixed Awnings:
   1. Frame Fabrication: Fabricate awning frames from steel and aluminum. Preassemble in shop to greatest extent possible. Disassemble units only as necessary for shipping and handling limitations. Use connections that maintain structural value of joined pieces. Clearly mark units for reassembly and coordinated installation. Form bent-metal corners to smallest radius possible without causing grain separation or otherwise impairing work.
   2. Form exposed work true to line and level with accurate angles and surfaces and straight edges.
   3. Weld corners and connections continuously. Obtain fusion without undercut or overlap. Remove welding flux immediately. At exposed corners and connections, finish exposed welds and surfaces smooth and blended so no roughness shows after finishing and contour of welded surface matches that of adjacent surface.
   4. Provide for anchorage of type indicated; coordinate with supporting structure. Space anchoring devices to secure awnings in place and to properly transfer loads.

C. Steel Finish: Manufacturer's standard primed and top-coated decorative – Kynar finish complying with finish manufacturer's written instructions for surface preparation including pretreatment, application, baking, and minimum dry film thickness.

   1. Color: Pewter

D. Aluminum Finish: Pewter

PART 3 - EXECUTION

3.1 EXAMINATION

A. Examine substrates, areas, and conditions, with Installer present, for compliance with requirements for supporting members, blocking, inserts, installation tolerances, and other conditions affecting performance of the Work.

B. Proceed with installation only after unsatisfactory conditions have been corrected.

3.2 INSTALLATION

A. General: Install awnings at locations and in position indicated, securely connected to supports, free of rack, and in proper relation to adjacent construction. Use mounting methods of types described and in compliance with Shop Drawings and fabricator's written instructions.

B. Install awnings after other finishing operations, including joint sealing and painting, have been completed.

C. Weld frame connections that are not to be left as exposed joints but cannot be shop welded because of shipping size limitations.

1. Field Welding: Comply with the following requirements:

a. Use materials and methods that minimize distortion and develop strength and corrosion resistance of base metals.
b. Obtain fusion without undercut or overlap.
c. Remove welding flux immediately.
d. At exposed connections, finish exposed welds and surfaces smooth and blended so no roughness shows after finishing and contour of welded surface matches that of adjacent surface.

D. Anchoring to In-Place Construction: Use anchors, fasteners, fittings, hardware, and installation accessories where necessary for securing awnings to structural support and for properly transferring load to in-place construction.

E. Corrosion Protection: Coat concealed surfaces of aluminum that come in contact with grout, concrete, masonry, wood, or dissimilar metals with a heavy coat of bituminous paint.

F. Coordinate awning installation with flashing and joint-sealant installation so these materials are installed in sequence and in a manner that prevents exterior moisture from passing through completed exterior wall and roof assemblies.

3.3 ADJUSTING

A. Adjust hardware and moving parts to function smoothly, and lubricate as recommended by retractable-awning manufacturer.

3.4 CLEANING AND PROTECTION

A. Touch up factory-applied finishes to restore damaged or soiled areas.

B. Galvanized Surfaces: Clean field welds, connections, and abraded areas and repair galvanizing to comply with ASTM A780.

END OF SECTION 10 73 13

DIVISION 11

SECTION 11 30 13 - RESIDENTIAL APPLIANCES

PART 1 - GENERAL

1.1 RELATED DOCUMENTS

A. Drawings and general provisions of the Contract, including General and Supplementary Conditions and Division 01 Specification Sections, apply to this Section.

1.2 SUMMARY

A. Section Includes:

1. Refrigerator/freezers

1.3 ACTION SUBMITTALS

A. Product Data: For each type of product indicated. Include operating characteristics, dimensions of individual appliances, and finishes for each appliance.

B. Appliance Schedule: For appliances; use same designations indicated on Drawings.

C. Manufacturer Certificates: Signed by manufacturers certifying that products comply with requirements.

1.4 INFORMATIONAL SUBMITTALS

A. Product Test Reports: Based on evaluation of comprehensive tests performed by manufacturer and witnessed by a qualified testing agency, for each product.

B. Research/Evaluation Reports: For each product.

C. Maintenance Data: For each product to include in maintenance manuals.

D. Warranties: Special warranties specified in this Section.

1.5 CLOSEOUT SUBMITTALS

A. Operation and maintenance data.

1.6 QUALITY ASSURANCE

A. Installer Qualifications: An employer of workers trained and approved by manufacturer for installation and maintenance of units required for this Project.

B. Manufacturer Qualifications: A qualified manufacturer. Maintain, within 50 miles of Project site, a service center capable of providing training, parts, and emergency maintenance repairs.

B. Source Limitations: Obtain residential appliances through one source from a single manufacturer.

1. Provide products from same manufacturer for each type of appliance required.
2. To the greatest extent possible, provide appliances by a single manufacturer for entire Project.

C. Product Options: Information on Drawings and in Specifications establishes requirements for product's aesthetic effects and performance characteristics. Aesthetic effects are indicated by dimensions, arrangements, alignment, and profiles of components and assemblies as they relate to sightlines, to one another, and to adjoining construction. Performance characteristics are indicated by criteria subject to verification by one or more methods including preconstruction testing, field testing, and in-service performance.

D. Regulatory Requirements: Comply with provisions of the following product certifications:

1. NFPA: Provide electrical appliances listed and labeled as defined in NFPA 70, Article 100, by a testing agency acceptable to authorities having jurisdiction, and marked for intended use.
2. UL and NEMA: Provide electrical components required as part of residential appliances that are listed and labeled by UL and that comply with applicable NEMA standards.
3. NAECA: Provide residential appliances that comply with NAECA standards.

E. Regulatory Requirements, Accessibility: Where residential appliances are indicated to comply with accessibility requirements, comply with the U.S. Architectural & Transportation Barriers Compliance Board's "Americans with Disabilities Act (ADA), Accessibility Guidelines for Buildings and Facilities (ADAAG)," ANSI A117.1.

F. AHAM Standards: Provide appliances that comply with the following AHAM standards:
1. Household Refrigerators: AHAM HRF-1.
2. Household Freezers: AHAM HRF-1.

G. Energy Ratings: Provide residential appliances that carry labels indicating energy-cost analysis (estimated annual operating costs) and efficiency information as required by the FTC Appliance Labeling Rule.

1. Provide appliances that qualify for the EPA/DOE ENERGY STAR product labeling program.

H. Pre-installation Conference: Conduct conference at Project site to comply with requirements in Division 01 Section "Project Management and Coordination."

1.7 WARRANTY

A. Special Warranties: Manufacturer's standard form in which manufacturer of each appliance specified agrees to repair or replace residential appliances or components that fail in materials or workmanship within specified warranty period.

1. Warranties in subparagraphs below are examples only; revise to suit appliances specified. After the first year, most limited warranties cover only parts and exclude labor. Verify terms with manufacturer.

2. Refrigerator/Freezer: Five-year limited warranty for in-home service on the sealed refrigeration system.

PART 2 - PRODUCTS

2.1 MANUFACTURERS

A. Basis-of-Design Product: The design for each residential appliance is based on the product named. Subject to compliance with requirements, provide either the named product or a comparable product by General Electric or LG.

2.2 REFRIGERATION APPLIANCES

A. Refrigerator / Freezer

1. Basis-of-Design: GE / GDE25ESKSS, or comparable model.
2. ENERGY STAR Qualified
3. Color: Stainless Steel
4. Dimensions: 28” W x 32-5/8” D x 64-3/4” H
5. Description: Bottom-freezer refrigerator with 17.55 cubic feet total and 7.28 cubic feet freezer capacity. With handles.
6. Features Include:
   a. Upfront temperature controls
   b. Adjustable spillproof glass shelves
   c. Snack drawer
   d. Frost-free
   e. Filtration unit

PART 3 - EXECUTION

3.1 EXAMINATION

A. Examine conditions, with Installer present, for compliance with requirements for installation tolerances and other conditions affecting performance of work.

B. Examine roughing-in for piping systems to verify actual locations of piping connections before equipment installation.

C. Proceed with installation only after unsatisfactory conditions have been corrected.

3.2 INSTALLATION, GENERAL

A. General: Comply with manufacturer's written instructions.

B. Freestanding Equipment: Place units in final locations after finishes have been completed in each area. Verify that clearances are adequate to properly operate equipment.

C. Utilities: Refer to Divisions 15 and 16 for plumbing and electrical requirements.

D. Installation standards: Refer to owner’s design standards for installation of appliances. Appliances shall be installed level and true with the lines of the buildings.

1. Refrigerator units to be tilted slightly backward to insure proper door closure.

3.3 CLEANING AND PROTECTION

A. Test each item of residential appliances to verify proper operation. Make necessary adjustments.

B. Verify that accessories required have been furnished and installed.

C. Remove packing material from residential appliances and leave units in clean condition, ready for operation.

3.4 DEMONSTRATION

A. Engage a factory-authorized service representative to train Owner's maintenance personnel to adjust, operate, and maintain residential appliances. Refer to Division 01 Section "Demonstration and Training."

END OF SECTION 11 30 13

DIVISION 12

SECTION 12 4816 - ENTRANCE FLOORING GRILLES AND FRAMES

PART 1 - GENERAL

1.1 SUMMARY

A. Section includes recessed floor grilles and frames.

1.2 RELATED REQUIREMENTS

A. Section 124813 "Entrance Floor Mats and Frames" for flexible floor mats and frames

B. Division 03 - Cast-In-Place Concrete: For concrete floor slab recess, and grouting frames into recess.

C. Division 23 - Sanitary Waste and Vent Piping: For floor drain if applicable.

1.3 REFERENCES

A. ASTM B 221-93 Standard Specification for Aluminum and Aluminum-Alloy Extruded Bars, Rods, Wire, Shapes, and Tubes

B. ASTM A 276-92 Standard Specification for Stainless and Heat-Resisting Steel Bars and Shapes.

C. AAMA 606.1 Voluntary Guide Specifications and Inspection Methods for Integral Color Anodic Finishes for Architectural Aluminum

D. AAMA 607.1 Voluntary Guide Specifications and Inspection Methods for Clear Anodic Finishes for Architectural Aluminum.

E. Comply with applicable provisions in the DOJ's "2010 ADA Standards for Accessible Design" and ICC A117.1.

1.4 COORDINATION

A. Coordinate size and location of recesses in concrete to receive floor grilles and frames.

1.5 ACTION SUBMITTALS

A. Shop Drawings: Indicate configuration and dimensions, show components, adjacent construction, required clearances and tolerance and other affected work.

B. Product Data: Manufacturer’s technical data for each type of floor door, including setting drawings and finish requirements

C. Samples: For the following products, in manufacturer's standard sizes

D. Floor Grille: Assembled section of floor grille.

E. Frame Members: Sample of each type and color

1.6 INFORMATIONAL SUBMITTALS

A. Provide manufacturer's standard warranty

B. Sustainable Design Submittals:

a. Building Product Disclosure Requirements: To encourage the use of building products that are working to minimize their environmental and health impacts, provide the following information when available:

1) Material Ingredients Documentation demonstrating the chemical inventory of the product

b. EQ Credit: Enhanced Indoor Air Quality Strategies

1) Strategy 1. Entryway Systems Install permanent entryway systems at least 10 feet (3 meters) long in the primary direction of travel to capture dirt and particulates entering the building at regularly used exterior entrances. Acceptable entryway systems include permanently installed grates, grilles, slotted systems that allow for cleaning underneath, rollout mats, and any other materials manufactured as entryway systems with equivalent or better performance. Maintain all on a weekly basis.

1.7 CLOSEOUT SUBMITTALS

A. Manufacturer's Installation Instructions and Operation & Maintenance: Indicate installation, operation and maintenance requirements and rough-in dimensions.

1.8 MAINTENANCE MATERIAL SUBMITTALS

A. Furnish extra materials that match products installed and that are packaged with protective covering for storage and identified with labels describing contents.

PART 2 - PRODUCTS

2.1 MANUFACTURER

A. Nystrom

9300 73rd Ave N

Minneapolis, MN 55428

PH: 800-547-2635

www.Nystrom.com

B. Rigid Floor Grille: Extruded aluminum tread rails 1.5 inches (38.1 mm) (38.1 mm) on-center by 1-3/4 inches (44.5 mm) (44.5 mm) high, sitting on continuous vinyl cushions.

1. Basis-of-Design Product: Nystrom; GRATEdesign®

2. Rolling Load: 1500 lb (680 kg) per wheel.

3. Tread Inserts:

a. Premium Carpet with 3700 denier, solution-dyed, woven nylon fibers; and shall include a minimum of 100, 10-mil monofilament fibers per inch. Each carpet fiber and monofilament shall be fusion-bonded to a rigid, two-ply backing to prevent fraying and supplied in continuous spliced-free lengths. Fibers shall be treated with anti-stain and anti-static additives.

b. Rugged Scrub: Crimped, solution-dyed, 600 denier polypropylene fibers tufted into a woven double backing and mechanically secured to tread rails.

c. Brush: Brush made with rigid nylon bristles, 9 tufts per inch, each tuft containing 80 bristles.

d. Vinyl: Ribbed-design-surface, resilient vinyl.

e. Serrated Aluminum: Plain serrated aluminum treads.

f. Ecotread Recycled Rubber: Recycled rubber with an SC of 90, manufactured with recycled rubber and EPDM backing.

g. Ribbed Rubber: TPV, dual-durameter rubber insert with convex and continuous serrations.

h. Vinyl Abrasive Insert: Mineral abrasive particles bonded to vinyl.

4. Colors, Textures, and Patterns of Inserts: As selected by Architect from full range of industry colors.

5. Rail Color: Mill finish.

6. Grill Size**:** As indicated.

7. Frame:

a. Level Bed (LBM): Mechanically attached aluminum frame.

b. Level Bed (LBC): Cast-in-place aluminum frame.

c. Deep Pit: Cast-in-place aluminum frame, **2-inch- (50.8-mm-)** deep with 1/2-inch (13-mm) exposed surface

PART 3 - EXECUTION

3.1 EXAMINATION

A. Products must be placed on a flat and level substrate. Substrate shall meet tolerance of 1/8" over 10 feet in accordance with ACI 302.

B. Examine areas and conditions under which Work is to be performed and identify conditions detrimental to proper or timely completion.

1. Do not proceed until unsatisfactory conditions have been corrected.

3.2 INSTALLATION

A. Install products in accordance with manufacturer's instructions, at locations shown and with top of products level with adjoining finished flooring where applicable.

B. Coordinate top of product surfaces with swinging doors to provide under-door clearance.

1. Provide necessary shims, spacers, and anchorages for proper location and secure attachment of frames to concrete.

2. For installation in terrazzo flooring, contact manufacturer.

3.3 ADJUSTING AND CLEANING

A. Adjust top surface of assembly to be flush with adjacent finishes.

B. Coordinate top of surfaces with doors that swing across surface to provide adequate under door clearance.

C. Clean dirt and debris from frame recess before installing floor system.

3.4 PROTECTION

A. Upon completion of frame installations, provide temporary filler of plywood or fiberboard in grille recesses, and cover frames with plywood protective flooring. Maintain protection until construction traffic has ended and Project is near time of Substantial Completion.

B. Install product when no further wheeled construction traffic will occur and wet type operations including painting and decorating are complete.

END OF SECTION 12 48 16

DIVISION 22

SECTION 220500 - COMMON WORK RESULTS FOR PLUMBING

PART 1 - GENERAL

1.1 RELATED DOCUMENTS

A. Drawings and general provisions of the Contract, including General and Supplementary Conditions and Division 01 specification sections, apply to this section.

1.2 SECTION INCLUDES

A. Piping materials and installation instructions common to most piping systems.

B. Transition fittings.

C. Dielectric fittings.

D. Mechanical sleeve seals.

E. Sleeves.

F. Escutcheons.

G. Grout.

H. Plumbing demolition.

I. Equipment installation requirements common to equipment sections.

J. Painting and finishing.

K. Concrete bases.

L. Supports and anchorages.

1.3 DEFINITIONS

A. Finished Spaces: Spaces other than mechanical and electrical equipment rooms, furred spaces, pipe chases, unheated spaces immediately below roof, spaces above ceilings, unexcavated spaces, crawlspaces, and tunnels.

B. Exposed, Interior Installations: Exposed to view indoors. Examples include finished occupied spaces and mechanical equipment rooms.

C. Exposed, Exterior Installations: Exposed to view outdoors or subject to outdoor ambient temperatures and weather conditions. Examples include rooftop locations.

D. Concealed, Interior Installations: Concealed from view and protected from physical contact by building occupants. Examples include above ceilings and in chases.

E. Concealed, Exterior Installations: Concealed from view and protected from weather conditions and physical contact by building occupants but subject to outdoor ambient temperatures. Examples include installations within unheated shelters.

F. The following are industry abbreviations for plastic materials:
1. ABS: Acrylonitrile-butadiene-styrene plastic.
2. CPVC: Chlorinated polyvinyl chloride plastic.
3. PE: Polyethylene plastic.
4. PVC: Polyvinyl chloride plastic.

G. The following are industry abbreviations for rubber materials:
1. EPDM: Ethylene-propylene-diene terpolymer rubber.
2. NBR: Acrylonitrile-butadiene rubber.

1.4 SUBMITTALS

A. Submit under provisions of Section 01 33 00.

B. Product Data: For the following:
1. Transition fittings.
2. Dielectric fittings.
3. Mechanical sleeve seals.
4. Escutcheons.

C. Welding certificates.

1.5 QUALITY ASSURANCE

A. Steel Support Welding: Qualify processes and operators according to AWS D1.1, "Structural Welding Code--Steel."

B. Steel Pipe Welding: Qualify processes and operators according to ASME Boiler and Pressure Vessel Code: Section IX, "Welding and Brazing Qualifications."
1. Comply with provisions in ASME B31 Series, "Code for Pressure Piping."
2. Certify that each welder has passed AWS qualification tests for welding processes involved and that certification is current.

C. Electrical Characteristics for Plumbing Equipment: Equipment of higher electrical characteristics may be furnished provided such proposed equipment is approved in writing and connecting electrical services, circuit breakers, and conduit sizes are appropriately modified. If minimum energy ratings or efficiencies are specified, equipment shall comply with requirements.

1.6 DELIVERY, STORAGE AND HANDLING

A. Deliver pipes and tubes with factory-applied end caps. Maintain end caps through shipping, storage, and handling to prevent pipe end damage and to prevent entrance of dirt, debris, and moisture.

B. Store plastic pipes protected from direct sunlight. Support to prevent sagging and bending.

1.7 COORDINATION

A. Arrange for pipe spaces, chases, slots, and openings in building structure during progress of construction, to allow for plumbing installations.

B. Coordinate installation of required supporting devices and set sleeves in poured-in-place concrete and other structural components as they are constructed.

C. Coordinate requirements for access panels and doors for plumbing items requiring access that are concealed behind finished surfaces. Access panels and doors are specified in Section 08 31 00.

PART 2 - PRODUCTS

2.1 MANUFACTURERS

A. In other Part 2 articles where subparagraph titles below introduce lists, the following requirements apply for product selection:
   1. Available Manufacturers: Subject to compliance with requirements, manufacturers offering products that may be incorporated into the Work include, but are not limited to, the manufacturers specified.
   2. Manufacturers: Subject to compliance with requirements, provide products by the manufacturers specified.

2.2 PIPE, TUBE, AND FITTINGS

A. Refer to individual Division 22 piping sections for pipe, tube, and fitting materials and joining methods.

B. Pipe Threads: ASME B1.20.1 for factory-threaded pipe and pipe fittings.

2.3 JOINING MATERIALS

A. Refer to individual Division 22 piping sections for special joining materials not listed below.

B. Pipe-Flange Gasket Materials: Suitable for chemical and thermal conditions of piping system contents.
   1. ASME B16.21, nonmetallic, flat, asbestos-free, 1/8-inch maximum thickness unless thickness or specific material is indicated.
      a. Full-Face Type: For flat-face, Class 125, cast-iron and cast-bronze flanges.
      b. Narrow-Face Type: For raised-face, Class 250, cast-iron and steel flanges.
   2. AWWA C110, rubber, flat face, 1/8 inch thick, unless otherwise indicated; and full-face or ring type, unless otherwise indicated.

C. Flange Bolts and Nuts: ASME B18.2.1, carbon steel, unless otherwise indicated.

D. Plastic, Pipe-Flange Gasket, Bolts, and Nuts: Type and material recommended by piping system manufacturer, unless otherwise indicated.

E. Solder Filler Metals: ASTM B32, lead-free alloys. Include water-flushable flux according to ASTM B813.

F. Brazing Filler Metals: AWS A5.8, BCuP Series, copper-phosphorus alloys for general-duty brazing, unless otherwise indicated; and AWS A5.8, BAg1, silver alloy for refrigerant piping, unless otherwise indicated.

G. Welding Filler Metals: Comply with AWS D10.12 for welding materials appropriate for wall thickness and chemical analysis of steel pipe being welded.

H. Solvent Cements for Joining Plastic Piping:
1. ABS Piping: ASTM D2235.
2. CPVC Piping: ASTM F493.
3. PVC Piping: ASTM D2564. Include primer according to ASTM F656.
4. PVC to ABS Piping Transition: ASTM D3138.

I. Fiberglass Pipe Adhesive: As furnished or recommended by pipe manufacturer.

2.4 TRANSITION FITTINGS

A. AWWA Transition Couplings: Same size as, and with pressure rating at least equal to and with ends compatible with, piping to be joined.
1. Manufacturers:
   a. Dresser Industries, Inc.; DMD Div.
   b. Ford Meter Box Company, Incorporated (The); Pipe Products Div.
   c. Powerseal
   d. Victaulic
2. Underground Piping NPS 1-1/2 and Smaller: Manufactured fitting or coupling.
3. Underground Piping NPS 2 and Larger: AWWA C219, metal sleeve-type coupling.
4. Aboveground Pressure Piping: Pipe fitting.

B. Plastic-to-Metal Transition Fittings: CPVC and PVC one-piece fitting with manufacturer's Schedule 80 equivalent dimensions; one end with threaded brass insert, and one solvent-cement-joint end.
1. Manufacturers:
   a. Eslon Thermoplastics.
   b. Spears Manufacturing
   c. Elster

C. Plastic-to-Metal Transition Adaptors: One-piece fitting with manufacturer's SDR 11 equivalent dimensions; one end with threaded brass insert, and one solvent-cement-joint end.
1. Manufacturers:
   a. Eslon Thermoplastics.
   b. Spears Manufacturing
   c. Elster

D. Plastic-to-Metal Transition Unions: MSS SP-107, CPVC and PVC four-part union. Include brass end, solvent-cement-joint end, rubber O-ring, and union nut.
1. Manufacturers:
   a. NIBCO INC.
   b. LASCO Fittings Inc.
   c. Spears Manufacturing

E. Flexible Transition Couplings for Underground Non-pressure Drainage Piping: ASTM C1173 with elastomeric sleeve, ends same size as piping to be joined, and corrosion-resistant metal band on each end.
   1. Manufacturers:
      a. NIBCO INC.
      b. LASCO Fittings Inc.
      c. Spears Manufacturing

2.5 DIELECTRIC FITTINGS

A. Description: Combination fitting of copper alloy and ferrous materials with threaded, solder-joint, plain, or weld-neck end connections that match piping system materials.

B. Insulating Material: Suitable for system fluid, pressure, and temperature.

C. Dielectric Unions: Factory-fabricated, union assembly, for 250-psig minimum working pressure at 180 degrees F.
   1. Manufacturers:
      a. Epco Sales, Inc.
      b. Watts Industries, Inc.; Water Products Div.
      c. Zurn Industries, Inc.; Wilkins Div.

D. Dielectric Flanges: Factory-fabricated, companion-flange assembly, for 150- or 300-psig minimum working pressure as required to suit system pressures.
   1. Manufacturers:
      a. Epco Sales, Inc.
      b. Watts Industries, Inc.; Water Products Div.
      c. Zurn Industries, Inc.; Wilkins Div.

E. Dielectric-Flange Kits: Companion-flange assembly for field assembly. Include flanges, full-face- or ring-type neoprene or phenolic gasket, phenolic or polyethylene bolt sleeves, phenolic washers, and steel backing washers.
   1. Manufacturers:
      a. Epco Sales, Inc.
      b. Watts Industries, Inc.; Water Products Div.
      c. Zurn Industries, Inc.; Wilkins Div.
   2. Separate companion flanges and steel bolts and nuts shall have 150- or 300-psig minimum working pressure where required to suit system pressures.

F. Dielectric Couplings: Galvanized-steel coupling with inert and non-corrosive, thermoplastic lining; threaded ends; and 300-psig minimum working pressure at 225 degrees F.
   1. Manufacturers:
      a. Epco Sales, Inc.
      b. Watts Industries, Inc.; Water Products Div.
      c. Zurn Industries, Inc.; Wilkins Div.

G. Dielectric Nipples: Electroplated steel nipple with inert and non-corrosive, thermoplastic lining; plain, threaded, or grooved ends; and 300-psig minimum working pressure at 225 degrees F.
   1. Manufacturers:
      a. Epco Sales, Inc.
      b. Watts Industries, Inc.; Water Products Div.
      c. Zurn Industries, Inc.; Wilkins Div.

2.6 MECHANICAL SLEEVE SEALS

A. Description: Modular sealing element unit, designed for field assembly, to fill annular space between pipe and sleeve.
   1. Manufacturers:
      a. Thunderline Link-Seal
      b. Fernco
      c. Metraflex Co.
   2. Sealing Elements: EPDM interlocking links shaped to fit surface of pipe. Include type and number required for pipe material and size of pipe.
   3. Pressure Plates: Carbon steel. Include two for each sealing element.
   4. Connecting Bolts and Nuts: Carbon steel with corrosion-resistant coating of length required to secure pressure plates to sealing elements. Include one for each sealing element.

2.7 SLEEVES

A. Galvanized-Steel Sheet: 0.0239-inch minimum thickness; round tube closed with welded longitudinal joint.

B. Steel Pipe: ASTM A53, Type E, Grade B, Schedule 40, galvanized, plain ends.

C. Cast Iron: Cast or fabricated "wall pipe" equivalent to ductile-iron pressure pipe, with plain ends and integral waterstop, unless otherwise indicated.

D. Stack Sleeve Fittings: Manufactured, cast-iron sleeve with integral clamping flange. Include clamping ring and bolts and nuts for membrane flashing.
   1. Underdeck Clamp: Clamping ring with set screws.

E. Molded PVC: Permanent, with nailing flange for attaching to wooden forms.

F. PVC Pipe: ASTM D1785, Schedule 40.

G. Molded PE: Reusable, PE, tapered-cup shaped, and smooth-outer surface with nailing flange for attaching to wooden forms.

2.8 ESCUTCHEONS

A. Description: Manufactured wall and ceiling escutcheons and floor plates, with an ID to closely fit around pipe, tube, and insulation of insulated piping and an OD that completely covers opening.

B. One-Piece, Deep-Pattern Type: Deep-drawn, box-shaped brass with polished chrome-plated finish.

C. One-Piece, Cast-Brass Type: With set screw.
   1. Finish: Polished chrome-plated.

D. Split-Casting, Cast-Brass Type: With concealed hinge and set screw.
   1. Finish: Polished chrome-plated.

E. One-Piece, Stamped-Steel Type: With set screw or spring clips and chrome-plated finish.

F. Split-Plate, Stamped-Steel Type: With concealed hinge, set screw or spring clips, and chrome-plated finish.

G. One-Piece, Floor-Plate Type: Cast-iron floor plate.

H. Split-Casting, Floor-Plate Type: Cast brass with concealed hinge and set screw.

2.9 GROUT

A. Description: ASTM C1107, Grade B, non-shrink and nonmetallic, dry hydraulic-cement grout.
   1. Characteristics: Post-hardening, volume-adjusting, non-staining, non-corrosive, nongaseous, and recommended for interior and exterior applications.
   2. Design Mix: 5000-psi, 28-day compressive strength.
   3. Packaging: Premixed and factory packaged.

PART 3 - EXECUTION

3.1 PLUMBING DEMOLITION

A. Refer to Section 01 73 29 and Section 02 41 19 for general demolition requirements and procedures.

B. Disconnect, demolish, and remove plumbing systems, equipment, and components indicated to be removed.
   1. Piping to Be Removed: Remove portion of piping indicated to be removed and cap or plug remaining piping with same or compatible piping material.
   2. Piping to Be Abandoned in Place: Drain piping and cap or plug piping with same or compatible piping material.
   3. Equipment to Be Removed: Disconnect and cap services and remove equipment.
   4. Equipment to Be Removed and Reinstalled: Disconnect and cap services and remove, clean, and store equipment; when appropriate, reinstall, reconnect, and make equipment operational.
   5. Equipment to Be Removed and Salvaged: Disconnect and cap services and remove equipment and deliver to Owner.

C. If pipe, insulation, or equipment to remain is damaged in appearance or is unserviceable, remove damaged or unserviceable portions and replace with new products of equal capacity and quality.

3.2 PIPING SYSTEMS - COMMON REQUIREMENTS

A. Install piping according to the following requirements and Division 22 sections specifying piping systems.

B. Drawing plans, schematics, and diagrams indicate general location and arrangement of piping systems. Indicated locations and arrangements were used to size pipe and calculate friction loss, expansion, pump sizing, and other design considerations. Install piping as indicated unless deviations to layout are approved on Coordination Drawings.

C. Install piping in concealed locations, unless otherwise indicated and except in equipment rooms and service areas.

D. Install piping indicated to be exposed and piping in equipment rooms and service areas at right angles or parallel to building walls. Diagonal runs are prohibited unless specifically indicated otherwise.

E. Install piping above accessible ceilings to allow sufficient space for ceiling panel removal.

F. Install piping to permit valve servicing.

G. Install piping at indicated slopes.

H. Install piping free of sags and bends.

I. Install fittings for changes in direction and branch connections.

J. Install piping to allow application of insulation.

K. Select system components with pressure rating equal to or greater than system operating pressure.

L. Install escutcheons for penetrations of walls, ceilings, and floors according to the following:
   1. New Piping:
      a. Piping with Fitting or Sleeve Protruding from Wall: One-piece, deep-pattern type.
      b. Chrome-Plated Piping: One-piece, cast-brass type with polished chrome-plated finish.
      c. Insulated Piping: One-piece, stamped-steel type with spring clips.
      d. Bare Piping at Wall and Floor Penetrations in Finished Spaces: One-piece, cast-brass type with polished chrome-plated finish.
      e. Bare Piping at Wall and Floor Penetrations in Finished Spaces: One-piece, stamped-steel type.
      f. Bare Piping at Ceiling Penetrations in Finished Spaces: One-piece or split-casting, cast-brass type with polished chrome-plated finish.
      g. Bare Piping in Unfinished Service Spaces: One-piece, cast-brass type with rough-brass finish.
      h. Bare Piping in Equipment Rooms: One-piece, cast-brass type.
      i. Bare Piping in Equipment Rooms: One-piece, stamped-steel type with set screw or spring clips.
      j. Bare Piping at Floor Penetrations in Equipment Rooms: One-piece, floor-plate type.
   2. Existing Piping: Use the following:
      a. Chrome-Plated Piping: Split-casting, cast-brass type with chrome-plated finish.
      b. Insulated Piping: Split-plate, stamped-steel type with concealed or exposed-rivet hinge and spring clips.
      c. Bare Piping at Wall and Floor Penetrations in Finished Spaces: Split-plate, stamped-steel type with concealed hinge and spring clips.
      d. Bare Piping at Ceiling Penetrations in Finished Spaces: Split-casting, cast-brass type with chrome-plated finish.
      e. Bare Piping at Ceiling Penetrations in Finished Spaces: Split-plate, stamped-steel type with concealed hinge and set screw.
      f. Bare Piping in Unfinished Service Spaces: Split-plate, stamped-steel type with concealed or exposed-rivet hinge and set screw or spring clips.
      g. Bare Piping in Equipment Rooms: Split-plate, stamped-steel type with set screw or spring clips.

h. Bare Piping at Floor Penetrations in Equipment Rooms: Split-casting, floor-plate type.

M. Sleeves are not required for core-drilled holes.

N. Permanent sleeves are not required for holes formed by removable PE sleeves.

O. Install sleeves for pipes passing through concrete and masonry walls and concrete floor and roof slabs.

P. Install sleeves for pipes passing through concrete and masonry walls, gypsum-board partitions, and concrete floor and roof slabs.
1. Cut sleeves to length for mounting flush with both surfaces.
   a. Exception: Extend sleeves installed in floors of mechanical equipment areas or other wet areas two (2) inches above finished floor level. Extend cast-iron sleeve fittings below floor slab as required to secure clamping ring if ring is specified.
2. Install sleeves in new walls and slabs as new walls and slabs are constructed.
3. Install sleeves that are large enough to provide 1/4-inch annular clear space between sleeve and pipe or pipe insulation. Use the following sleeve materials:
   a. Steel Pipe Sleeves: For pipes smaller than NPS 6.
   b. Steel Sheet Sleeves: For pipes NPS 6 and larger, penetrating gypsum-board partitions.
   c. Stack Sleeve Fittings: For pipes penetrating floors with membrane waterproofing. Secure flashing between clamping flanges. Install section of cast-iron soil pipe to extend sleeve to two (2) inches above finished floor level. Refer to Section 07 62 00 for flashing.
      1) Seal space outside of sleeve fittings with grout.
4. Except for underground wall penetrations, seal annular space between sleeve and pipe or pipe insulation, using joint sealants appropriate for size, depth, and location of joint. Refer to Section 07 92 00 for materials and installation.

Q. Aboveground, Exterior-Wall Pipe Penetrations: Seal penetrations using sleeves and mechanical sleeve seals. Select sleeve size to allow for 1-inch annular clear space between pipe and sleeve for installing mechanical sleeve seals.
1. Install steel pipe for sleeves smaller than six (6) inches in diameter.
2. Install cast-iron "wall pipes" for sleeves six (6) inches and larger in diameter.
3. Mechanical Sleeve Seal Installation: Select type and number of sealing elements required for pipe material and size. Position pipe in center of sleeve. Assemble mechanical sleeve seals and install in annular space between pipe and sleeve. Tighten bolts against pressure plates that cause sealing elements to expand and make watertight seal.

R. Underground, Exterior-Wall Pipe Penetrations: Install cast-iron "wall pipes" for sleeves. Seal pipe penetrations using mechanical sleeve seals. Select sleeve size to allow for 1-inch annular clear space between pipe and sleeve for installing mechanical sleeve seals.
1. Mechanical Sleeve Seal Installation: Select type and number of sealing elements required for pipe material and size. Position pipe in center of sleeve. Assemble mechanical sleeve seals and install in annular space between pipe and sleeve. Tighten bolts against pressure plates that cause sealing elements to expand and make watertight seal.

S. Fire-Barrier Penetrations: Maintain indicated fire rating of walls, partitions, ceilings, and floors at pipe penetrations. Seal pipe penetrations with firestop materials. Refer to Section 07 84 13 for materials.

T. Verify final equipment locations for roughing-in.

U. Refer to equipment specifications in other sections of these specifications for roughing-in requirements.

3.3 PIPING JOINT CONSTRUCTION

A. Join pipe and fittings according to the following requirements and Division 22 sections specifying piping systems.

B. Ream ends of pipes and tubes and remove burrs. Bevel plain ends of steel pipe.

C. Remove scale, slag, dirt, and debris from inside and outside of pipe and fittings before assembly.

D. Soldered Joints: Apply ASTM B813, water-flushable flux, unless otherwise indicated, to tube end. Construct joints according to ASTM B828 or CDA's "Copper Tube Handbook," using lead-free solder alloy complying with ASTM B32.

E. Brazed Joints: Construct joints according to AWS's "Brazing Handbook," "Pipe and Tube" Chapter, using copper-phosphorus brazing filler metal complying with AWS A5.8.

F. Threaded Joints: Thread pipe with tapered pipe threads according to ASME B1.20.1. Cut threads full and clean using sharp dies. Ream threaded pipe ends to remove burrs and restore full ID. Join pipe fittings and valves as follows:
   1. Apply appropriate tape or thread compound to external pipe threads unless dry seal threading is specified.
   2. Damaged Threads: Do not use pipe or pipe fittings with threads that are corroded or damaged. Do not use pipe sections that have cracked or open welds.

G. Welded Joints: Construct joints according to AWS D10.12, using qualified processes and welding operators according to Part 1 "Quality Assurance" article.

H. Flanged Joints: Select appropriate gasket material, size, type, and thickness for service application. Install gasket concentrically positioned. Use suitable lubricants on bolt threads.

I. Plastic Piping Solvent-Cement Joints: Clean and dry joining surfaces. Join pipe and fittings according to the following:
   1. Comply with ASTM F402 for safe-handling practice of cleaners, primers, and solvent cements.
   2. ABS Piping: Join according to ASTM D2235 and ASTM D2661 Appendixes.
   3. CPVC Piping: Join according to ASTM D2846 Appendix.
   4. PVC Pressure Piping: Join schedule number ASTM D1785, PVC pipe and PVC socket fittings according to ASTM D2672. Join other-than-schedule-number PVC pipe and socket fittings according to ASTM D2855.
   5. PVC Non-Pressure Piping: Join according to ASTM D2855.
   6. PVC to ABS Non-Pressure Transition Fittings: Join according to ASTM D3138 Appendix.

J. Plastic Pressure Piping Gasketed Joints: Join according to ASTM D3139.

K. Plastic Non-Pressure Piping Gasketed Joints: Join according to ASTM D3212.

L. PE Piping Heat-Fusion Joints: Clean and dry joining surfaces by wiping with clean cloth or paper towels. Join according to ASTM D2657.
   1. Plain-End Pipe and Fittings: Use butt fusion.
   2. Plain-End Pipe and Socket Fittings: Use socket fusion.

M. Fiberglass Bonded Joints: Prepare pipe ends and fittings, apply adhesive, and join according to pipe manufacturer's written instructions.

3.4 PIPING CONNECTIONS

A. Make connections according to the following, unless otherwise indicated:
   1. Install unions, in piping NPS 2 and smaller, adjacent to each valve and at final connection to each piece of equipment.
   2. Install flanges, in piping NPS 2-1/2 and larger, adjacent to flanged valves and at final connection to each piece of equipment.
   3. Dry Piping Systems: Install dielectric unions and flanges to connect piping materials of dissimilar metals.
   4. Wet Piping Systems: Install dielectric coupling and nipple fittings to connect piping materials of dissimilar metals.

3.5 EQUIPMENT INSTALLATION - COMMON REQUIREMENTS

A. Install equipment to allow maximum possible headroom unless specific mounting heights are not indicated.

B. Install equipment level and plumb, parallel and perpendicular to other building systems and components in exposed interior spaces, unless otherwise indicated.

C. Install plumbing equipment to facilitate service, maintenance, and repair or replacement of components. Connect equipment for ease of disconnecting, with minimum interference to other installations. Extend grease fittings to accessible locations.

D. Install equipment to allow right of way for piping installed at required slope.

3.6 PAINTING

A. Painting of plumbing systems, equipment, and components is specified in Section 09 91 00.

B. Damage and Touchup: Repair marred and damaged factory-painted finishes with materials and procedures to match original factory finish.

3.7 CONCRETE BASES

A. Concrete Bases: Anchor equipment to concrete base according to equipment manufacturer's written instructions and according to seismic codes at project.
   1. Construct concrete bases of dimensions indicated, but not less than four (4) inches larger in both directions than supported unit.
   2. Install dowel rods to connect concrete base to concrete floor. Unless otherwise indicated, install dowel rods on 18-inch centers around the full perimeter of the base.

3. Install epoxy-coated anchor bolts for supported equipment that extend through concrete base, and anchor into structural concrete floor.
4. Place and secure anchorage devices. Use supported equipment manufacturer's setting drawings, templates, diagrams, instructions, and directions furnished with items to be embedded.
5. Install anchor bolts to elevations required for proper attachment to supported equipment.
6. Install anchor bolts according to anchor-bolt manufacturer's written instructions.
7. Use 3000-psi, 28-day compressive-strength concrete and reinforcement as specified in Section 03 30 00.

3.8 ERECTION OF METAL SUPPORTS AND ANCHORAGES

A. Refer to Section 05 50 00 for structural steel.

B. Cut, fit, and place miscellaneous metal supports accurately in location, alignment, and elevation to support and anchor plumbing materials and equipment.

C. Field Welding: Comply with AWS D1.1.

3.9 ERECTION OF WOOD SUPPORTS AND ANCHORAGES

A. Cut, fit, and place wood grounds, nailers, blocking, and anchorages to support, and anchor plumbing materials and equipment.

B. Select fastener sizes that will not penetrate members if opposite side will be exposed to view or will receive finish materials. Tighten connections between members. Install fasteners without splitting wood members.

C. Attach to substrates as required to support applied loads.

3.10 GROUTING

A. Mix and install grout for plumbing equipment base bearing surfaces, pump and other equipment base plates, and anchors.

B. Clean surfaces that will come into contact with grout.

C. Provide forms as required for placement of grout.

D. Avoid air entrapment during placement of grout.

E. Place grout, completely filling equipment bases.

F. Place grout on concrete bases and provide smooth bearing surface for equipment.

G. Place grout around anchors.

H. Cure placed grout.

END OF SECTION 22 05 00

SECTION 22 05 13 - COMMON MOTOR REQUIREMENTS FOR PLUMBING EQUIPMENT

PART 1 - GENERAL

1.1 RELATED DOCUMENTS

A. Drawings and general provisions of the Contract, including General and Supplementary Conditions and Division 01 specification sections, apply to this section.

1.2 SECTION INCLUDES

A. General requirements for single-phase and general-purpose, horizontal, small and medium, squirrel-cage induction motors for use on ac power systems up to 600 V and installed at equipment manufacturer's factory or shipped separately by equipment manufacturer for field installation.

1.3 COORDINATION

A. Coordinate features of motors, installed units, and accessory devices to be compatible with the following:
   1. Motor controllers.
   2. Torque, speed, and horsepower requirements of the load.
   3. Ratings and characteristics of supply circuit and required control sequence.
   4. Ambient and environmental conditions of installation location.

PART 2 - PRODUCTS

2.1 GENERAL MOTOR REQUIREMENTS

A. Comply with requirements in this section except when stricter requirements are specified in plumbing equipment schedules or sections.

B. Comply with NEMA MG 1 unless otherwise indicated.

C. Comply with IEEE 841 for severe-duty motors.

2.2 MOTOR CHARACTERISTICS

A. Duty: Continuous duty at ambient temperature of 40 degrees C and at altitude of 3300 feet above sea level.

B. Capacity and Torque Characteristics: Sufficient to start, accelerate, and operate connected loads at designated speeds, at installed altitude and environment, with indicated operating sequence, and without exceeding nameplate ratings or considering service factor.

2.3 SINGLE-PHASE MOTORS

A. Motors larger than 1/20 hp shall be one of the following, to suit starting torque and requirements of specific motor application:
   1. Permanent-split capacitor.
   2. Split phase.
   3. Capacitor start, inductor run.
   4. Capacitor start, capacitor run.

B. Bearings: Pre-lubricated, anti-friction ball bearings or sleeve bearings suitable for radial and thrust loading.

C. Motors 1/20 HP and Smaller: Shaded-pole type.

D. Thermal Protection: Internal protection to automatically open power supply circuit to motor when winding temperature exceeds a safe value calibrated to temperature rating of motor insulation. Thermal-protection device shall automatically reset when motor temperature returns to normal range.

PART 3 - EXECUTION (Not Applicable)

END OF SECTION 22 05 13

SECTION 22 05 16 - EXPANSION FITTINGS AND LOOPS FOR PLUMBING PIPING

PART 1 - GENERAL

1.1 RELATED DOCUMENTS

A. Drawings and general provisions of the Contract, including General and Supplementary Conditions and Division 01 Specification Sections, apply to this Section.

1.2 SUMMARY

A. Section Includes:

1. Flexible-hose packless expansion joints.
2. Metal-bellows packless expansion joints.
3. Rubber packless expansion joints.
4. Grooved-joint expansion joints.
5. Pipe loops and swing connections.
6. Alignment guides and anchors.

1.3 PERFORMANCE REQUIREMENTS

A. Compatibility: Products shall be suitable for piping service fluids, materials, working pressures, and temperatures.

B. Capability: Products to absorb 200 percent of maximum axial movement between anchors.

1.4 ACTION SUBMITTALS

A. Product Data: For each type of product indicated.

B. Delegated-Design Submittal: For each anchor and alignment guide indicated to comply with performance requirements and design criteria, including analysis data signed and sealed by the qualified professional engineer responsible for their preparation.

1. Design Calculations: Calculate requirements for thermal expansion of piping systems and for selecting and designing expansion joints, loops, and swing connections.
2. Anchor Details: Detail fabrication of each anchor indicated. Show dimensions and methods of assembly and attachment to building structure.
3. Alignment Guide Details: Detail field assembly and attachment to building structure.
4. Schedule: Indicate type, manufacturer's number, size, material, pressure rating, end connections, and location for each expansion joint.

1.5 INFORMATIONAL SUBMITTALS

A. Welding certificates.

B. Product Certificates: For each type of expansion joint, from manufacturer.

1.6 CLOSEOUT SUBMITTALS

A. Maintenance Data: For expansion joints to include in maintenance manuals.

1.7 QUALITY ASSURANCE

A. Welding Qualifications: Qualify procedures and personnel according to the following:

1. AWS D1.1/D1.1M, "Structural Welding Code - Steel."
2. ASME Boiler and Pressure Vessel Code: Section IX.

PART 2 - PRODUCTS

2.1 PACKLESS EXPANSION JOINTS

A. Flexible-Hose Packless Expansion Joints:

1. Manufacturers: Subject to compliance with requirements, provide products by one of the following available manufacturers offering products that may be incorporated into the Work include, but are not limited to, the following:

a. Hyspan
b. Metraflex, Inc.
c. Unisource Manufacturing, Inc.

2. Description: Manufactured assembly with inlet and outlet elbow fittings and two flexible-metal-hose legs joined by long-radius, 180-degree return bend or center section of flexible hose.
3. Flexible Hose: Corrugated-metal inner hoses and braided outer sheaths.
4. Expansion Joints for Copper Tubing NPS 2 and Smaller: Copper-alloy fittings with solder-joint or threaded end connections.

a. Bronze hoses and single-braid bronze sheaths with 450 psig at 70 deg F. and 340 psig at 450 deg F. ratings.
b. Bronze hoses and double-braid bronze sheaths with 700 psig at 70 deg F and 500 psig at 450 deg F ratings.

5. Expansion Joints for Copper Tubing NPS 2-1/2 to NPS 4: Copper-alloy fittings with flanged or grooved end connections.

a. Stainless-steel hoses and single-braid, stainless-steel sheaths with 300 psig at 70 deg F and 225 psig at 450 deg F ratings.
b. Stainless-steel hoses and double-braid, stainless-steel sheaths with 420 psig at 70 deg F and 315 psig at 450 deg F ratings.

6. Expansion Joints for Steel Piping NPS 2 and Smaller: Stainless-steel fittings with threaded end connections.

a. Stainless-steel hoses and single-braid, stainless-steel sheaths with 450 psig at 70 deg F and 325 psig at 600 deg F ratings.

7. Expansion Joints for Steel Piping NPS 2-1/2 to NPS 8: Stainless-steel fittings with flanged or grooved end connections.

    a. Stainless-steel hoses and single-braid, stainless-steel sheaths with 200 psig at 70 deg F and 145 psig at 600 deg F ratings.
    b. Stainless-steel hoses and double-braid, stainless-steel sheaths with 275 psig at 70 deg F and 200 psig at 600 deg F ratings.

B. Metal-Bellows Packless Expansion Joints:

1. Manufacturers: Subject to compliance with requirements, provide products by one of the following available manufacturers offering products that may be incorporated into the Work include, but are not limited to, the following:

    a. Hyspan
    b. Metraflex, Inc.
    c. Unisource Manufacturing, Inc.

2. Standards: ASTM F 1120 and EJMA's "Standards of the Expansion Joint Manufacturers Association, Inc."
3. Type: Circular, corrugated bellows with external tie rods.
4. Minimum Pressure Rating: 150 psig unless otherwise indicated.
5. Configuration: Single joint class(es) unless otherwise indicated.
6. Expansion Joints for Copper Tubing: Single- or multi-ply phosphor-bronze bellows, copper pipe ends, and brass shrouds.

    a. End Connections for Copper Tubing NPS 2 and Smaller: Solder joint or threaded.
    b. End Connections for Copper Tubing NPS 2-1/2 to NPS 4: Flanged or grooved.
    c. End Connections for Copper Tubing NPS 5 and Larger: Flanged.

C. Rubber Packless Expansion Joints:

1. Manufacturers: Subject to compliance with requirements, provide products by one of the following available manufacturers offering products that may be incorporated into the Work include, but are not limited to, the following:

    a. Hyspan
    b. Metraflex, Inc.
    c. Unisource Manufacturing, Inc.

2. Standards: ASTM F 1123 and FSA's "Technical Handbook: Non-Metallic Expansion Joints and Flexible Pipe Connectors."
3. Material: Fabric-reinforced rubber complying with FSA-NMEJ-703.
4. Arch Type: Single or multiple arches with external control rods.
5. Spherical Type: Single or multiple spheres with external control rods.
6. Minimum Pressure Rating for NPS 1-1/2 to NPS 4: 150 psig at 220 deg F.
7. Minimum Pressure Rating for NPS 5 and NPS 6: 140 psig at 200 deg F.
8. Material for Fluids Containing Gas, Hydrocarbons, or Oil: Buna-N. Material for Water: EPDM.
9. End Connections: Full-faced, integral steel flanges with steel retaining rings.

2.2 GROOVED-JOINT EXPANSION JOINTS

A. Manufacturers: Subject to compliance with requirements, provide products by one of the following available manufacturers offering products that may be incorporated into the Work include, but are not limited to, the following:

   a. Hyspan
   b. Metraflex, Inc.
   c. Unisource Manufacturing, Inc.

B. Description: Factory-assembled expansion joint made of several grooved-end pipe nipples, couplings, and grooved joints.

C. Standard: AWWA C606, for grooved joints.

D. Nipples: Galvanized, ASTM A 53/A 53M, Schedule 40, Type E or S, steel pipe with grooved ends.

E. Couplings: Five flexible type for steel-pipe dimensions. Include ferrous housing sections, Buna-N gasket suitable for diluted acid, alkaline fluids, and EPDM gasket suitable for cold and hot water, and bolts and nuts.

2.3 ALIGNMENT GUIDES AND ANCHORS

A. Alignment Guides:

   1. Manufacturers: Subject to compliance with requirements, provide products by one of the following available manufacturers offering products that may be incorporated into the Work include, but are not limited to, the following:

      a. Hyspan
      b. Metraflex, Inc.
      c. Unisource Manufacturing, Inc.

   2. Description: Steel, factory-fabricated alignment guide, with bolted two-section outer cylinder and base for attaching to structure; with two-section guiding spider for bolting to pipe.

B. Anchor Materials:

   1. Steel Shapes and Plates: ASTM A 36/A 36M.
   2. Bolts and Nuts: ASME B18.10 or ASTM A 183, steel hex head.
   3. Washers: ASTM F 844, steel, plain, flat washers.
   4. Mechanical Fasteners: Insert-wedge-type stud with expansion plug anchor for use in hardened portland cement concrete, with tension and shear capacities appropriate for application.

      a. Stud: Threaded, zinc-coated carbon steel.
      b. Expansion Plug: Zinc-coated steel.
      c. Washer and Nut: Zinc-coated steel.

   5. Chemical Fasteners: Insert-type-stud, bonding-system anchor for use with hardened portland cement concrete, with tension and shear capacities appropriate for application.

a. Bonding Material: ASTM C 881/C 881M, Type IV, Grade 3, two-component epoxy resin suitable for surface temperature of hardened concrete where fastener is to be installed.
b. Stud: ASTM A 307, zinc-coated carbon steel with continuous thread on stud unless otherwise indicated.
c. Washer and Nut: Zinc-coated steel.

PART 3 - EXECUTION

3.1 EXPANSION-JOINT INSTALLATION

A. Install expansion joints of sizes matching sizes of piping in which they are installed.

B. Install metal-bellows expansion joints according to EJMA's "Standards of the Expansion Joint Manufacturers Association, Inc."

C. Install rubber packless expansion joints according to FSA-NMEJ-702.

D. Install grooved-joint expansion joints to grooved-end steel piping

3.2 PIPE LOOP AND SWING CONNECTION INSTALLATION

A. Install pipe loops cold-sprung in tension or compression as required to partly absorb tension or compression produced during anticipated change in temperature.

B. Connect risers and branch connections to mains with at least five pipe fittings including tee in main.

C. Connect risers and branch connections to terminal units with at least five pipe fittings including tee in riser.

D. Connect mains and branch connections to terminal units with at least five pipe fittings including tee in main.

3.3 ALIGNMENT-GUIDE AND ANCHOR INSTALLATION

A. Install alignment guides to guide expansion and to avoid end-loading and torsional stress.

B. Install one guide(s) on each side of pipe expansion fittings and loops. Install guides nearest to expansion joint not more than five pipe diameters from expansion joint.

C. Attach guides to pipe and secure guides to building structure.

D. Install anchors at locations to prevent stresses from exceeding those permitted by ASME B31.9 and to prevent transfer of loading and stresses to connected equipment.

E. Anchor Attachments:

1. Anchor Attachment to Black-Steel Pipe: Attach by welding. Comply with ASME B31.9 and ASME Boiler and Pressure Vessel Code: Section IX, "Welding and Brazing Qualifications."

2. Anchor Attachment to Galvanized-Steel Pipe: Attach with pipe hangers. Use MSS SP-69, Type 42, riser clamp welded to anchor.
3. Anchor Attachment to Copper Tubing: Attach with pipe hangers. Use MSS SP-69, Type 24, U-bolts bolted to anchor.

F. Fabricate and install steel anchors by welding steel shapes, plates, and bars. Comply with ASME B31.9 and AWS D1.1/D1.1M.

1. Anchor Attachment to Steel Structural Members: Attach by welding.
2. Anchor Attachment to Concrete Structural Members: Attach by fasteners. Follow fastener manufacturer's written instructions.

G. Use grout to form flat bearing surfaces for guides and anchors attached to concrete.

END OF SECTION 22 05 16

SECTION 22 05 17 - SLEEVES AND SLEEVE SEALS FOR PLUMBING PIPING

PART 1 - GENERAL

1.1 RELATED DOCUMENTS

A. Drawings and general provisions of the Contract, including General and Supplementary Conditions and Division 01 specification sections, apply to this section.

1.2 SECTION INCLUDES

A. Sleeves.

B. Stack-sleeve fittings.

C. Sleeve-seal systems.

D. Sleeve-seal fittings.

E. Grout.

1.3 SUBMITTALS

A. Submit under provisions of Section 01 33 00.

B. Product Data: For each type of product indicated.

PART 2 - PRODUCTS

2.1 SLEEVES

A. Cast-Iron Wall Pipes: Cast or fabricated of cast or ductile iron and equivalent to ductile-iron pressure pipe, with plain ends and integral waterstop unless otherwise indicated.

B. Galvanized Steel Wall Pipes: ASTM A53, Schedule 40, with plain ends and welded steel collar; zinc coated.

C. Galvanized Steel Pipe Sleeves: ASTM A53, Type E, Grade B, Schedule 40, zinc coated, with plain ends.

D. PVC Pipe Sleeves: ASTM D1785, Schedule 40.

E. Galvanized Steel Sheet Sleeves: 0.0239-inch minimum thickness; round tube closed with welded longitudinal joint.

F. Molded PE or PP Sleeves: Removable, tapered-cup shaped, and smooth outer surface with nailing flange for attaching to wooden forms.

G. Molded PVC Sleeves: With nailing flange for attaching to wooden forms.

2.2 STACK-SLEEVE FITTINGS

A. Manufacturers: Subject to compliance with requirements, provide products by one (1) of the following available manufacturers offering products that may be incorporated into the Work include, but are not limited to, the following:

1. Smith, Jay R. Mfg. Co.
2. Zurn Specification Drainage Operation; Zurn Plumbing Products Group.
3. Wade Division of Tyler Pie

B. Description: Manufactured, cast-iron sleeve with integral clamping flange. Include clamping ring, bolts, and nuts for membrane flashing.

1. Underdeck Clamp: Clamping ring with setscrews.

2.3 SLEEVE-SEAL SYSTEMS

A. Manufacturers: Subject to compliance with requirements, provide products by one (1) of the following available manufacturers offering products that may be incorporated into the Work include, but are not limited to, the following:

1. Advance Products & Systems, Inc.
2. Metraflex Company (The).
3. Pipeline Seal and Insulator, Inc.

B. Description: Modular sealing-element unit, designed for field assembly, for filling annular space between piping and sleeve.

1. Sealing Elements: EPDM-rubber interlocking links shaped to fit surface of pipe. Include type and number required for pipe material and size of pipe.
2. Pressure Plates: Carbon steel.
3. Connecting Bolts and Nuts: Carbon steel, with corrosion-resistant coating, of length required to secure pressure plates to sealing elements.

2.4 SLEEVE-SEAL FITTINGS

A. Manufacturers: Subject to compliance with requirements, provide products by one (1) of the following available manufacturers offering products that may be incorporated into the Work include, but are not limited to, the following:

1. Fernco.
2. Link-Seal.
3. Emerson Industrial

B. Description: Manufactured plastic, sleeve-type, waterstop assembly made for imbedding in concrete slab or wall. Unit has plastic or rubber waterstop collar with center opening to match piping OD.

2.5 GROUT

A. Standard: ASTM C1107, Grade B, post-hardening and volume-adjusting, dry, hydraulic-cement grout.

B. Characteristics: Non-shrink; recommended for interior and exterior applications.

C. Design Mix: 5000-psi, 28-day compressive strength.

D. Packaging: Premixed and factory packaged.

PART 3 - EXECUTION

3.1 SLEEVE INSTALLATION

A. Install sleeves for piping passing through penetrations in floors, partitions, roofs, and walls.

B. For sleeves that will have sleeve seal system installed, select sleeves of size large enough to provide 1-inch annular clear space between piping and concrete slabs and walls.

1. Sleeves are not required for core-drilled holes.

C. Install sleeves in concrete floors, concrete roof slabs, and concrete walls as new slabs and walls are constructed.

1. Permanent sleeves are not required for holes in slabs formed by molded PE or PP sleeves.
2. Cut sleeves to length for mounting flush with both surfaces.

a. Exception: Extend sleeves installed in floors of mechanical equipment areas or other wet areas two (2) inches above finished floor level.

3. Using grout, seal the space outside of sleeves in slabs and walls without sleeve-seal system.

D. Install sleeves for pipes passing through interior partitions.

1. Cut sleeves to length for mounting flush with both surfaces.
2. Install sleeves that are large enough to provide 1/4-inch annular clear space between sleeve and pipe or pipe insulation.
3. Seal annular space between sleeve and piping or piping insulation; use joint sealants appropriate for size, depth, and location of joint. Comply with requirements for sealants specified in Section 07 92 00.

E. Fire-Barrier Penetrations: Maintain indicated fire rating of walls, partitions, ceilings, and floors at pipe penetrations. Seal pipe penetrations with firestop materials. Comply with requirements for firestopping specified in Section 07 84 13.

3.2 STACK-SLEEVE-FITTING INSTALLATION

A. Install stack-sleeve fittings in new slabs as slabs are constructed.

1. Install fittings that are large enough to provide 1/4-inch annular clear space between sleeve and pipe or pipe insulation.
2. Secure flashing between clamping flanges for pipes penetrating floors with membrane waterproofing. Comply with requirements for flashing specified in Section 07 62 00.

3. Install section of cast-iron soil pipe to extend sleeve to two (2) inches above finished floor level.
4. Extend cast-iron sleeve fittings below floor slab as required to secure clamping ring if ring is specified.
5. Using grout, seal the space around outside of stack-sleeve fittings.

B. Fire-Barrier Penetrations: Maintain indicated fire rating of floors at pipe penetrations. Seal pipe penetrations with firestop materials. Comply with requirements for firestopping specified in Section 07 84 13.

3.3 SLEEVE-SEAL-SYSTEM INSTALLATION

A. Install sleeve-seal systems in sleeves in exterior concrete walls and slabs-on-grade at service piping entries into building.

B. Select type, size, and number of sealing elements required for piping material and size and for sleeve ID or hole size. Position piping in center of sleeve. Center piping in penetration, assemble sleeve-seal system components, and install in annular space between piping and sleeve. Tighten bolts against pressure plates that cause sealing elements to expand and make a watertight seal.

3.4 SLEEVE-SEAL-FITTING INSTALLATION

A. Install sleeve-seal fittings in new walls and slabs as they are constructed.

B. Assemble fitting components of length to be flush with both surfaces of concrete slabs and walls. Position waterstop flange to be centered in concrete slab or wall.

C. Secure nailing flanges to concrete forms.

D. Using grout, seal the space around outside of sleeve-seal fittings.

3.5 SLEEVE AND SLEEVE-SEAL SCHEDULE

A. Use sleeves and sleeve seals for the following piping-penetration applications:

1. Exterior Concrete Walls above Grade:

   a. Piping Smaller Than NPS 8: Galvanized steel wall sleeves.

2. Exterior Concrete Walls below Grade:

   a. Piping Smaller Than NPS 8: Cast-iron wall sleeves with sleeve-seal system.

      1) Select sleeve size to allow for 1-inch annular clear space between piping and sleeve for installing sleeve-seal system.

   b. Piping NPS 10 and Larger: Cast-iron wall sleeves with sleeve seal system.

      1) Select sleeve size to allow for 1-inch annular clear space between piping and sleeve for installing sleeve-seal system.

3. Concrete Slabs-on-Grade:

    a. Piping Smaller Than NPS 8: galvanized steel pipe sleeves.

    b. Piping NPS 10 and Larger: galvanized steel pipe sleeves

4. Concrete Slabs above Grade:

    a. Piping Smaller Than NPS 8: Stack sleeve fittings and Sleeve seal fittings.

5. Interior Partitions:

    a. Piping Smaller Than NPS 8: Galvanized steel pipe sleeves.

END OF SECTION 22 05 17

SECTION 22 05 18 - ESCUTCHEONS FOR PLUMBING PIPING

PART 1 - GENERAL

1.1 RELATED DOCUMENTS

A. Drawings and general provisions of the Contract, including General and Supplementary Conditions and Division 01 specification sections, apply to this section.

1.2 SECTION INCLUDES

A. Escutcheons.

B. Floor plates.

1.3 SUBMITTALS

A. Submit under provisions of Section 01 33 00.

B. Product Data: For each type of product indicated.

PART 2 - PRODUCTS

2.1 ESCUTCHEONS

A. One-Piece, Cast-Brass Type: With polished, chrome-plated and rough-brass finish and setscrew fastener.

B. One-Piece, Deep-Pattern Type: Deep-drawn, box-shaped brass with chrome-plated finish and spring-clip fasteners.

C. One-Piece, Stamped-Steel Type: With chrome-plated finish and spring-clip fasteners.

D. Split-Casting Brass Type: With polished, chrome-plated and rough-brass finish and with concealed hinge and setscrew.

E. Split-Plate, Stamped-Steel Type: With chrome-plated finish, concealed and exposed-rivet hinge, and spring-clip fasteners.

2.2 FLOOR PLATES

A. One-Piece Floor Plates: Cast-iron flange with holes for fasteners.

B. Split-Casting Floor Plates: Cast brass with concealed hinge.

PART 3 - EXECUTION

3.1 INSTALLATION

A. Install escutcheons for piping penetrations of walls, ceilings, and finished floors.

B. Install escutcheons with ID to closely fit around pipe, tube, and insulation of insulated piping and with OD that completely covers opening.

1. Escutcheons for New Piping:

a. Piping with Fitting or Sleeve Protruding from Wall: One-piece, deep-pattern type.
b. Chrome-Plated Piping: One-piece, cast-brass or split-casting brass type with polished, chrome-plated finish.
c. Insulated Piping: One-piece, stamped-steel type or split-plate, stamped-steel type with concealed hinge or split-plate, stamped-steel type with exposed-rivet hinge.
d. Bare Piping at Wall and Floor Penetrations in Finished Spaces: One-piece, cast-brass or split-casting brass type with polished, chrome-plated finish.
e. Bare Piping at Wall and Floor Penetrations in Finished Spaces: One-piece, stamped-steel type or split-plate, stamped-steel type with concealed hinge or split-plate, stamped-steel type with exposed-rivet hinge.
f. Bare Piping at Ceiling Penetrations in Finished Spaces: One-piece, cast-brass or split-casting brass type with polished, chrome-plated finish.
g. Bare Piping at Ceiling Penetrations in Finished Spaces: One-piece, stamped-steel type or split-plate, stamped-steel type with concealed hinge or split-plate, stamped-steel type with exposed-rivet hinge.
h. Bare Piping in Unfinished Service Spaces: One-piece, cast-brass or split-casting brass type with polished, chrome-plated rough-brass finish.
i. Bare Piping in Unfinished Service Spaces: One-piece, stamped-steel type or split-plate, stamped-steel type with concealed hinge or split-plate, stamped-steel type with exposed-rivet hinge.
j. Bare Piping in Equipment Rooms: One-piece, cast-brass or split-casting brass] type with polished, chrome-plated rough-brass finish.
k. Bare Piping in Equipment Rooms: One-piece, stamped-steel type [or split-plate, stamped-steel type with concealed hinge or split-plate, stamped-steel type with exposed-rivet hinge.

2. Escutcheons for Existing Piping:

a. Chrome-Plated Piping: Split-casting brass type with polished, chrome-plated finish.
b. Insulated Piping: Split-plate, stamped-steel type with concealed or exposed-rivet hinge.
c. Bare Piping at Wall and Floor Penetrations in Finished Spaces: Split-casting brass type with polished, chrome-plated finish.
d. Bare Piping at Wall and Floor Penetrations in Finished Spaces: Split-plate, stamped-steel type with concealed or exposed-rivet hinge.
e. Bare Piping at Ceiling Penetrations in Finished Spaces: Split-casting brass type with polished, chrome-plated finish.
f. Bare Piping at Ceiling Penetrations in Finished Spaces: Split-plate, stamped-steel type with concealed or exposed-rivet hinge.
g. Bare Piping in Unfinished Service Spaces: Split-casting brass type with polished, chrome-plated rough-brass finish.
h. Bare Piping in Unfinished Service Spaces: Split-plate, stamped-steel type with concealed or exposed-rivet hinge.

i. Bare Piping in Equipment Rooms: Split-casting brass type with polished, chrome-plated rough-brass finish.
j. Bare Piping in Equipment Rooms: Split-plate, stamped-steel type with concealed or exposed-rivet hinge.

C. Install floor plates for piping penetrations of equipment-room floors.

D. Install floor plates with ID to closely fit around pipe, tube, and insulation of piping and with OD that completely covers opening.

1. New Piping: One-piece, floor-plate type.
2. Existing Piping: Split-casting, floor-plate type.

3.2 FIELD QUALITY CONTROL

A. Replace broken and damaged escutcheons and floor plates using new materials.

END OF SECTION 22 05 18

SECTION 22 05 19 - METERS AND GAGES FOR PLUMBING PIPING

PART 1 - GENERAL

1.1 RELATED DOCUMENTS

A. Drawings and general provisions of the Contract, including General and Supplementary Conditions and Division 01 specification sections, apply to this section.

1.2 SECTION INCLUDES

A. Bimetallic-actuated thermometers.

B. Filled-system thermometers.

C. Liquid-in-glass thermometers.

D. Thermowells.

E. Dial-type pressure gages.

F. Gage attachments.

G. Test plugs.

H. Test-plug kits.

I. Sight flow indicators.

1.3 RELATED SECTIONS

A. Division 21 fire-suppression piping sections for fire-protection pressure gages.

B. Section 22 11 16 - Domestic Water Piping: Water meters inside the building.

1.4 SUBMITTALS

A. Submit under provisions of Section 01 33 00.

B. Product Data: For each type of product indicated.

C. Product Certificates: For each type of meter and gage, from manufacturer.

D. Operation and Maintenance Data: For meters and gages to include in operation and maintenance manuals.

PART 2 - PRODUCTS

2.1 BIMETALLIC-ACTUATED THERMOMETERS

A. Manufacturers: Subject to compliance with requirements, provide products by one (1) of the following available manufacturers offering products that may be incorporated into the Work include, but are not limited to, the following:

1. Ashcroft Inc.
2. Trerice, H. O. Co.
3. Watts Regulator Co.; a div. of Watts Water Technologies, Inc.

B. Standard: ASME B40.200.

C. Case: Liquid-filled and sealed type(s); stainless steel with 3-inch nominal diameter.

D. Dial: Non-reflective aluminum with permanently etched scale markings and scales in degrees F.

E. Connector Type(s): Union joint, adjustable angle, with unified-inch screw threads.

F. Connector Size: 1/2-inch, with ASME B1.1 screw threads.

G. Stem: 0.25 or 0.375-inch in diameter; stainless steel.

H. Window: Plain glass.

I. Ring: Stainless steel.

J. Element: Bimetal coil.

K. Pointer: Dark-colored metal.

L. Accuracy: Plus or minus [one, 1 percent of scale range.

2.2 FILLED-SYSTEM THERMOMETERS

A. Direct-Mounted, Metal-Case, Vapor-Actuated Thermometers:

1. Manufacturers: Subject to compliance with requirements, provide products by one (1) of the following available manufacturers offering products that may be incorporated into the Work include, but are not limited to, the following:

a. Ashcroft Inc.
b. Trerice
c. Watts Regulator

2. Standard: ASME B40.200.
3. Case: Sealed type, cast aluminum; 4-1/2-inch nominal diameter.
4. Element: Bourdon tube or other type of pressure element.

5. Movement: Mechanical, dampening type, with link to pressure element and connection to pointer.
6. Dial: Non-reflective aluminum with permanently etched scale markings graduated in degrees F.
7. Pointer: Dark-colored metal.
8. Window: Glass.
9. Ring: Stainless steel.
10. Connector Type(s): Union joint, adjustable, 180 degrees in vertical plane, with ASME B1.1 screw threads.
11. Thermal System: Liquid-filled bulb in copper-plated steel, aluminum, or brass stem and of length to suit installation.

    a. Design for Thermowell Installation: Bare stem.

12. Accuracy: Plus or minus one (1) percent of scale range.

B. Remote-Mounted, Metal-Case, Vapor-Actuated Thermometers:

1. Manufacturers: Subject to compliance with requirements, provide products by one (1) of the following available manufacturers offering products that may be incorporated into the Work include, but are not limited to, the following:
   a. Ashcroft Inc.
   b. Marsh Bellofram.
   c. Trerice, H. O. Co.

2. Standard: ASME B40.200.
3. Case: Sealed type, cast aluminum; 4-1/2-inch nominal diameter with back flange and holes for panel mounting.
4. Element: Bourdon tube or other type of pressure element.
5. Movement: Mechanical, with link to pressure element and connection to pointer.
6. Dial: Non-reflective aluminum with permanently etched scale markings graduated in degrees F.
7. Pointer: Dark-colored metal.
8. Window: Glass.
9. Ring: Stainless steel.
10. Connector Type(s): Union joint, back; with ASME B1.1 screw threads.
11. Thermal System: Liquid-filled bulb in copper-plated steel, aluminum, or brass stem and of length to suit installation.

    a. Design for Thermowell Installation: Bare stem.

12. Accuracy: Plus or minus one (1) percent of scale range.

2.3 LIQUID-IN-GLASS THERMOMETERS

A. Metal-Case, Compact-Style, Liquid-in-Glass Thermometers:

1. Manufacturers: Subject to compliance with requirements, provide products by one (1) of the following available manufacturers offering products that may be incorporated into the Work include, but are not limited to, the following:

   a. Trerice, H. O. Co.
   b. Marsh Bellofram.
   c. Ashcroft

2. Standard: ASME B40.200.
3. Case: Cast aluminum; 6-inch nominal size.
4. Case Form: Back angle unless otherwise indicated.
5. Tube: Glass with magnifying lens and blue organic liquid.
6. Tube Background: Non-reflective aluminum with permanently etched scale markings graduated in degrees F.
7. Window: Glass or plastic.
8. Stem: Aluminum or brass and of length to suit installation.

    a. Design for Thermowell Installation: Bare stem.

9. Connector: 3/4-inch, with ASME B1.1 screw threads.
10. Accuracy: Plus or minus one (1) percent of scale range or one (1) scale division, to a maximum of 1.5 percent of scale range.

2.4 THERMOWELLS

A. Thermowells:

1. Standard: ASME B40.200.
2. Description: Pressure-tight, socket-type fitting made for insertion into piping tee fitting.
3. Material for Use with Copper Tubing: CNR.
4. Material for Use with Steel Piping: CRES.
5. Type: Stepped shank unless straight or tapered shank is indicated.
6. External Threads: NPS 1/2, NPS 3/4, or NPS 1, ASME B1.20.1 pipe threads.
7. Internal Threads: 1/2, 3/4, and one (1) inch, with ASME B1.1 screw threads.
8. Bore: Diameter required to match thermometer bulb or stem.
9. Insertion Length: Length required to match thermometer bulb or stem.
10. Lagging Extension: Include on thermowells for insulated piping and tubing.
11. Bushings: For converting size of thermowell's internal screw thread to size of thermometer connection.

B. Heat-Transfer Medium: Mixture of graphite and glycerin.

2.5 PRESSURE GAGES

A. Direct-Mounted, Metal-Case, Dial-Type Pressure Gages:

1. Manufacturers: Subject to compliance with requirements, [provide products by one (1) of the following] [available manufacturers offering products that may be incorporated into the Work include, but are not limited to, the following:

    a. Trerice, H. O. Co.
    b. Marsh Bellofram.
    c. Ashcroft

2. Standard: ASME B40.100.
3. Case: Sealed Open-front, pressure relief type(s);cast aluminum; 4-1/2-inch nominal diameter.
4. Pressure-Element Assembly: Bourdon tube unless otherwise indicated.
5. Pressure Connection: Brass, with NPS 1/4, ASME B1.20.1 pipe threads and bottom-outlet type unless back-outlet type is indicated.
6. Movement: Mechanical, with link to pressure element and connection to pointer.

7. Dial: Non-reflective aluminum with permanently etched scale markings graduated in psi.
8. Pointer: Dark-colored metal.
9. Window: Glass.
10. Ring: Stainless steel.
11. Accuracy: Grade A, plus or minus one (1) percent of middle half of scale range.

B. Remote-Mounted, Metal-Case, Dial-Type Pressure Gages:

1. Manufacturers: Subject to compliance with requirements, provide products by one (1) of the following available manufacturers offering products that may be incorporated into the Work include, but are not limited to, the following:

   a. Terice
   b. Ashcroft Inc.
   c. Marsh Bellofram.

2. Standard: ASME B40.100.
3. Case: Sealed Open-front, pressure relief type(s); cast aluminum; 4-1/2-inch nominal diameter.
4. Pressure-Element Assembly: Bourdon tube unless otherwise indicated.
5. Pressure Connection: Brass, with NPS 1/4, ASME B1.20.1 pipe threads and bottom-outlet type unless back-outlet type is indicated.
6. Movement: Mechanical, with link to pressure element and connection to pointer.
7. Dial: Non-reflective aluminum with permanently etched scale markings graduated in psi.
8. Pointer: Dark-colored metal.
9. Window: Glass.
10. Ring: Stainless steel.
11. Accuracy: Grade A, plus or minus one (1) percent of middle half of scale range.

2.6 GAGE ATTACHMENTS

A. Snubbers: ASME B40.100, brass; with NPS 1/4, ASME B1.20.1 pipe threads and porous-metal-type surge-dampening device. Include extension for use on insulated piping.

B. Valves: Brass or stainless-steel needle, with NPS 1/4 ASME B1.20.1 pipe threads.

2.7 TEST PLUGS

A. Manufacturers: Subject to compliance with requirements, provide products by one (1) of the following available manufacturers offering products that may be incorporated into the Work include, but are not limited to, the following:
   1. Trerice, H. O. Co.
   2. Watts Regulator Co.; a div. of Watts Water Technologies, Inc.
   3. Weiss Instruments, Inc.

B. Description: Test-station fitting made for insertion into piping tee fitting.

C. Body: Brass or stainless steel with core inserts and gasketed and threaded cap. Include extended stem on units to be installed in insulated piping.

D. Thread Size: NPS 1/4, ASME B1.20.1 pipe thread.

E. Minimum Pressure and Temperature Rating: 500 psig at 200 degrees F.

F. Core Inserts: Chlorosulfonated polyethylene synthetic and EPDM self-sealing rubber.

2.8 TEST-PLUG KITS

A. Manufacturers: Subject to compliance with requirements, provide products by one (1) of the following available manufacturers offering products that may be incorporated into the Work include, but are not limited to, the following:
   1. Trerice, H. O. Co.
   2. Watts Regulator Co.; a div. of Watts Water Technologies, Inc.
   3. Weiss Instruments, Inc.

B. Furnish one (1) test-plug kit(s) containing two (2) thermometer(s), one (1) pressure gage and adapter, and carrying case. Thermometer sensing elements, pressure gage, and adapter probes shall be of diameter to fit test plugs and of length to project into piping.

C. Low-Range Thermometer: Small, bimetallic insertion type with 1- to 2-inch diameter dial and tapered-end sensing element. Dial range shall be at least 25 to 125 degrees F.

D. High-Range Thermometer: Small, bimetallic insertion type with 1- to 2-inch diameter dial and tapered-end sensing element. Dial range shall be at least [0 to 220 degrees F.

E. Pressure Gage: Small, Bourdon-tube insertion type with 2- to 3-inch diameter dial and probe. Dial range shall be at least 0 to 200 psig.

F. Carrying Case: Metal or plastic, with formed instrument padding.

2.9 SIGHT FLOW INDICATORS

A. Manufacturers: Subject to compliance with requirements, provide products by one (1) of the following available manufacturers offering products that may be incorporated into the Work include, but are not limited to, the following:

   1. Archon Industries, Inc.
   2. Dwyer Instruments, Inc.
   3. Emerson Process Management; Brooks Instrument.

B. Description: Piping inline-installation device for visual verification of flow.

C. Construction: Bronze or stainless-steel body, with sight glass and ball, flapper, or paddle wheel indicator, and threaded or flanged ends.

D. Minimum Pressure Rating: 150 psig.

E. Minimum Temperature Rating: 200 degrees F.

F. End Connections for NPS 2 and Smaller: Threaded.

G. End Connections for NPS 2-1/2 and Larger: Flanged.

PART 3 - EXECUTION

3.1 INSTALLATION

A. Install thermowells with socket extending to center of pipe and in vertical position in piping tees.

B. Install thermowells of sizes required to match thermometer connectors. Include bushings if required to match sizes.

C. Install thermowells with extension on insulated piping.

D. Fill thermowells with heat-transfer medium.

E. Install direct-mounted thermometers in thermowells and adjust vertical and tilted positions.

F. Install remote-mounted thermometer bulbs in thermowells and install cases on panels; connect cases with tubing and support tubing to prevent kinks. Use minimum tubing length.

G. Install direct-mounted pressure gages in piping tees with pressure gage located on pipe at the most readable position.

H. Install remote-mounted pressure gages on panel.

I. Install valve and snubber in piping for each pressure gage for fluids.

J. Install test plugs in piping tees.

K. Install thermometers in the following locations:

1. Inlet and outlet of each water heater.
2. Inlets and outlets of each domestic water heat exchanger.
3. Inlet and outlet of each domestic hot-water storage tank.
4. Inlet and outlet of each remote domestic water chiller.

L. Install pressure gages in the following locations:

1. Building water service entrance into building.
2. Inlet and outlet of each pressure-reducing valve.
3. Suction and discharge of each domestic water pump.

3.2 CONNECTIONS

A. Install meters and gages adjacent to machines and equipment to allow service and maintenance of meters, gages, machines, and equipment.

3.3 ADJUSTING

A. Adjust faces of meters and gages to proper angle for best visibility.

3.4 THERMOMETER SCHEDULE

A. Thermometers at inlet and outlet of each domestic water heater shall be one (1) of the following:

1. Liquid-filledbimetallic-actuated type.
2. Direct mounted, metal-case, vapor-actuated type.
3. Test plug with chlorosulfonated polyethylene synthetic EPDM self-sealing rubber inserts.

B. Thermometers at inlets and outlets of each domestic water heat exchanger shall be one (1) of the following:

1. Liquid-filledbimetallic-actuated type.
2. Direct mounted, metal-case, vapor-actuated type.
3. Test plug with chlorosulfonated polyethylene synthetic EPDM self-sealing rubber inserts.

C. Thermometers at inlet and outlet of each domestic hot-water storage tank shall be one (1) of the following:

1. Liquid-filledbimetallic-actuated type.
2. Direct mounted, metal-case, vapor-actuated type.
3. Test plug with chlorosulfonated polyethylene synthetic EPDM self-sealing rubber inserts.

D. Thermometers at inlet and outlet of each remote domestic water chiller shall be one (1) of the following:

1. Liquid-filled bimetallic-actuated type.
2. Direct mounted, metal-case, vapor-actuated type.
3. Test plug with chlorosulfonated polyethylene synthetic EPDM self-sealing rubber inserts.

E. Thermometer stems shall be of length to match thermowell insertion length.

3.5 THERMOMETER SCALE-RANGE SCHEDULE

A. Scale Range for Domestic Cold-Water Piping: 0 to 150 degrees F.

B. Scale Range for Domestic Hot-Water Piping: 0 to 250 degrees F.

C. Scale Range for Domestic Cooled-Water Piping: 0 to 100 degrees F.

3.6 PRESSURE-GAGE SCHEDULE

A. Pressure gages at discharge of each water service into building shall be one (1) of the following:
1. Direct-Mounted, Metal-Case, Vapor-Actuated Thermometers.

B. Pressure gages at inlet and outlet of each water pressure-reducing valve shall be one (1) of the following:
1. Direct-Mounted, Metal-Case, Vapor-Actuated Thermometers.

C. Pressure gages at suction and discharge of each domestic water pump shall be one (1) of the following:
1. Direct-Mounted, Metal-Case, Vapor-Actuated Thermometers.

3.7 PRESSURE-GAGE SCALE-RANGE SCHEDULE

A. Scale Range for Water Service Piping: 0 to 200 psi.

B. Scale Range for Domestic Water Piping: 0 to 200 psi.

END OF SECTION 22 05 19

SECTION 22 05 23 - GENERAL-DUTY VALVES FOR PLUMBING PIPING

PART 1 - GENERAL

1.1 RELATED DOCUMENTS

A. Drawings and general provisions of the Contract, including General and Supplementary Conditions and Division 01 specification sections, apply to this section.

1.2 SECTION INCLUDES

A. Bronze angle valves.

B. Brass ball valves.

C. Bronze ball valves.

D. Iron ball valves.

E. Iron, single-flange butterfly valves.

F. Iron, grooved-end butterfly valves.

G. Bronze swing check valves.

H. Iron swing check valves.

I. Iron swing check valves with closure control.

J. Iron, grooved-end swing check valves.

K. Iron, center-guided check valves. (Silent Check)

L. Iron, plate-type check valves (Wafer Check).

M. Bronze gate valves.

N. Iron gate valves.

O. Bronze globe valves.

P. Iron globe valves.

Q. Lubricated plug valves.

R. Chainwheels.

1.3 RELATED SECTIONS

1. Division 22 plumbing piping sections for specialty valves applicable to those Sections only.

2. Section 22 05 53 - Identification for Plumbing Piping and Equipment: Valve tags and schedules.

1.4 DEFINITIONS

A. CWP: Cold working pressure.

B. EPDM: Ethylene propylene copolymer rubber.

C. NBR: Acrylonitrile-butadiene, Buna-N, or nitrile rubber.

D. NRS: Non-rising stem.

E. OS&Y: Outside screw and yoke.

F. RS: Rising stem.

G. SWP: Steam working pressure.

1.5 SUBMITTALS

A. Submit under provisions of Section 01 33 00.

B. Product Data: For each type of valve indicated.

1.6 QUALITY ASSURANCE

A. Source Limitations for Valves: Obtain each type of valve from single source from single manufacturer.

B. ASME Compliance:

1. ASME B16.10 and ASME B16.34 for ferrous valve dimensions and design criteria.
2. ASME B31.1 for power piping valves.
3. ASME B31.9 for building services piping valves.

C. NSF Compliance: NSF 61 for valve materials for potable-water service and NSF/ANSI 372 for low lead content.

1.7 DELIVERY, STORAGE, AND HANDLING

A. Prepare valves for shipping as follows:

1. Protect internal parts against rust and corrosion.
2. Protect threads, flange faces, grooves, and weld ends.
3. Set angle, gate, and globe valves closed to prevent rattling.
4. Set ball and plug valves open to minimize exposure of functional surfaces.
5. Set butterfly valves closed or slightly open.
6. Block check valves in either closed or open position.

B. Use the following precautions during storage:

1. Maintain valve end protection.
2. Store valves indoors and maintain at higher than ambient dew point temperature. If outdoor storage is necessary, store valves off the ground in watertight enclosures.

C. Use sling to handle large valves; rig sling to avoid damage to exposed parts. Do not use handwheels or stems as lifting or rigging points.

PART 2 - PRODUCTS

2.1 GENERAL REQUIREMENTS FOR VALVES

A. Refer to valve schedule articles for applications of valves.

B. Valve Pressure and Temperature Ratings: Not less than indicated and as required for system pressures and temperatures.

C. Valve Sizes: Same as upstream piping unless otherwise indicated.

D. Valve Actuator Types:

1. Gear Actuator: For quarter-turn valves NPS 8 and larger.
2. Handwheel: For valves other than quarter-turn types.
3. Handlever: For quarter-turn valves NPS 6 and smaller except plug valves.
4. Wrench: For plug valves with square heads. Furnish Owner with one (1) wrench for every five (5) plug valves, for each size square plug-valve head.
5. Chainwheel: Device for attachment to valve handwheel, stem, or other actuator; of size and with chain for mounting height, as indicated in the "Valve Installation" article.

E. Valves in Insulated Piping: With 2-inch stem extensions and the following features:

1. Gate Valves: With rising stem.
2. Ball Valves: With extended operating handle of non-thermal-conductive material, and protective sleeve that allows operation of valve without breaking the vapor seal or disturbing insulation.
3. Butterfly Valves: With extended neck.

F. Valve-End Connections:

1. Flanged: With flanges according to ASME B16.1 for iron valves.
2. Grooved: With grooves according to AWWA C606.
3. Solder Joint: With sockets according to ASME B16.18.
4. Threaded: With threads according to ASME B1.20.1.

G. Valve Bypass and Drain Connections: MSS SP-45.

H. All valves used for potable water shall be lead free.

2.2 BRONZE ANGLE VALVES (For use in Non-Potable Water Systems.)

A. Class 125, Bronze Angle Valves with Bronze Disc:

1. Manufacturers: Subject to compliance with requirements, provide products by one (1) of the following available manufacturers offering products that may be incorporated into the Work include, but are not limited to, the following:

    a. Watts.
    b. Nibco.
    c. Apollo.

2. Description:

    a. Standard: MSS SP-80, Type 1.
    b. CWP Rating: 200 psig.
    c. Body Material: ASTM B62, bronze with integral seat and screw-in bonnet.
    d. Ends: Threaded.
    e. Stem and Disc: Bronze.
    f. Packing: Asbestos free.
    g. Handwheel: Malleable iron, bronze, or aluminum.

B. Class 125, Bronze Angle Valves with Nonmetallic Disc:

1. Manufacturers: Subject to compliance with requirements, provide products by one (1) of the following available manufacturers offering products that may be incorporated into the Work include, but are not limited to, the following:

    a. American Valve, Inc.
    b. NIBCO INC.
    c. Milwaukee Valve.

2. Description:

    a. Standard: MSS SP-80, Type 2.
    b. CWP Rating: 200 psig.
    c. Body Material: ASTM B62, bronze with integral seat and screw-in bonnet.
    d. Ends: Threaded.
    e. Stem: Bronze.
    f. Disc: PTFE or TFE.
    g. Packing: Asbestos free.
    h. Handwheel: Malleable iron, bronze, or aluminum.

C. Class 150, Bronze Angle Valves with Bronze Disc:

1. Manufacturers: Subject to compliance with requirements, provide products by one (1) of the following available manufacturers offering products that may be incorporated into the Work include, but are not limited to, the following:

    a. Watts.
    b. Nibco.
    c. Apollo.

2. Description:

    a. Standard: MSS SP-80, Type 1.
    b. CWP Rating: 300 psig.
    c. Body Material: ASTM B62, bronze with integral seat and union-ring bonnet.
    d. Ends: Threaded.

e. Stem and Disc: Bronze.
f. Packing: Asbestos free.
g. Handwheel: Malleable iron, bronze, or aluminum.

2.3 BRASS BALL VALVES

A. Two-Piece, Full-Port, Brass Ball Valves with Brass Trim:

1. Manufacturers: Subject to compliance with requirements, provide products by one (1) of the following available manufacturers offering products that may be incorporated into the Work include, but are not limited to, the following:

   a. Watts.
   b. Nibco.
   c. Apollo.

2. Description:

   a. Standard: MSS SP-110.
   b. SWP Rating: 150 psig.
   c. CWP Rating: 600 psig.
   d. Body Design: Two (2) pieces.
   e. Body Material: Forged brass.
   f. Ends: Threaded.
   g. Seats: PTFE or TFE.
   h. Stem: Brass.
   i. Ball: Chrome-plated brass.
   j. Port: Full.
   k. Lead Free

B. Two-Piece, Full-Port, Brass Ball Valves with Stainless-Steel Trim:

1. Manufacturers: Subject to compliance with requirements, provide products by one (1) of the following available manufacturers offering products that may be incorporated into the Work include, but are not limited to, the following:

   a. Watts.
   b. Nibco.
   c. Apollo.

2. Description:

   a. Standard: MSS SP-110.
   b. SWP Rating: 150 psig.
   c. CWP Rating: 600 psig.
   d. Body Design: Two (2) pieces.
   e. Body Material: Forged brass.
   f. Ends: Threaded.
   g. Seats: PTFE or TFE.
   h. Stem: Stainless steel.
   i. Ball: Stainless steel, vented.
   j. Port: Full.
   k. Lead Free

C. Two-Piece, Regular-Port, Brass Ball Valves with Brass Trim:

1. Manufacturers: Subject to compliance with requirements, provide products by one (1) of the following available manufacturers offering products that may be incorporated into the Work include, but are not limited to, the following:

   a. Watts.
   b. Nibco.
   c. Apollo.

2. Description:

   a. Standard: MSS SP-110.
   b. SWP Rating: 150 psig.
   c. CWP Rating: 600 psig.
   d. Body Design: Two (2) pieces.
   e. Body Material: Forged brass.
   f. Ends: Threaded.
   g. Seats: PTFE or TFE.
   h. Stem: Brass.
   i. Ball: Chrome-plated brass.
   j. Port: Regular.

D. Two-Piece, Regular-Port, Brass Ball Valves with Stainless-Steel Trim:

1. Manufacturers: Subject to compliance with requirements, provide products by one (1) of the following available manufacturers offering products that may be incorporated into the Work include, but are not limited to, the following:

   a. Watts.
   b. Nibco.
   c. Apollo.

2. Description:

   a. Standard: MSS SP-110.
   b. SWP Rating: 150 psig.
   c. CWP Rating: 600 psig.
   d. Body Design: Two (2) pieces.
   e. Body Material: Brass or bronze.
   f. Ends: Threaded.
   g. Seats: PTFE or TFE.
   h. Stem: Stainless steel.
   i. Ball: Stainless steel, vented.
   j. Port: Regular.

2.4 BRONZE BALL VALVES

A. One-Piece, Reduced-Port, Bronze Ball Valves with Bronze Trim:

1. Manufacturers: Subject to compliance with requirements, provide products by one (1) of the following available manufacturers offering products that may be incorporated into the Work include, but are not limited to, the following:

a. Watts.
b. Nibco.
c. Apollo.

2. Description:

a. Standard: MSS SP-110.
b. CWP Rating: 400 psig.
c. Body Design: One (1) piece.
d. Body Material: Bronze.
e. Ends: Threaded.
f. Seats: PTFE or TFE.
g. Stem: Bronze.
h. Ball: Chrome-plated brass.
i. Port: Reduced.

B. One-Piece, Reduced-Port, Bronze Ball Valves with Stainless-Steel Trim:

1. Manufacturers: Subject to compliance with requirements, provide products by one (1) of the following available manufacturers offering products that may be incorporated into the Work include, but are not limited to, the following:

a. Watts.
b. Nibco.
c. Apollo.

2. Description:

a. Standard: MSS SP-110.
b. CWP Rating: 600 psig.
c. Body Design: One (1) piece.
d. Body Material: Bronze.
e. Ends: Threaded.
f. Seats: PTFE or TFE.
g. Stem: Stainless steel.
h. Ball: Stainless steel, vented.
i. Port: Reduced.

C. Two-Piece, Full-Port, Bronze Ball Valves with Bronze Trim:

1. Manufacturers: Subject to compliance with requirements, provide products by one (1) of the following available manufacturers offering products that may be incorporated into the Work include, but are not limited to, the following:

a. Watts.
b. Nibco.
c. Apollo.

2. Description:

a. Standard: MSS SP-110.
b. SWP Rating: 150 psig.
c. CWP Rating: 600 psig.
d. Body Design: Two (2) pieces.
e. Body Material: Bronze.

f. Ends: Threaded.
g. Seats: PTFE or TFE.
h. Stem: Bronze.
i. Ball: Chrome-plated brass.
j. Port: Full.

D. Two-Piece, Full-Port, Bronze Ball Valves with Stainless-Steel Trim:

1. Manufacturers: Subject to compliance with requirements, provide products by one (1) of the following available manufacturers offering products that may be incorporated into the Work include, but are not limited to, the following:

a. Watts.
b. Nibco.
c. Apollo.

2. Description:

a. Standard: MSS SP-110.
b. SWP Rating: 150 psig.
c. CWP Rating: 600 psig.
d. Body Design: Two (2) pieces.
e. Body Material: Bronze.
f. Ends: Threaded.
g. Seats: PTFE or TFE.
h. Stem: Stainless steel.
i. Ball: Stainless steel, vented.
j. Port: Full.

E. Two-Piece, Regular-Port, Bronze Ball Valves with Bronze Trim:

1. Manufacturers: Subject to compliance with requirements, provide products by one (1) of the following available manufacturers offering products that may be incorporated into the Work include, but are not limited to, the following:

a. Watts.
b. Nibco.
c. Apollo.

2. Description:

a. Standard: MSS SP-110.
b. SWP Rating: 150 psig.
c. CWP Rating: 600 psig.
d. Body Design: Two (2) pieces.
e. Body Material: Bronze.
f. Ends: Threaded.
g. Seats: PTFE or TFE.
h. Stem: Bronze.
i. Ball: Chrome-plated brass.
j. Port: Regular.

F. Two-Piece, Regular-Port, Bronze Ball Valves with Stainless-Steel Trim:

1. Manufacturers: Subject to compliance with requirements, provide products by one (1) of the following available manufacturers offering products that may be incorporated into the Work include, but are not limited to, the following:

   a. Watts.
   b. Nibco.
   c. Apollo.

2. Description:

   a. Standard: MSS SP-110.
   b. SWP Rating: 150 psig.
   c. CWP Rating: 600 psig.
   d. Body Design: Two (2) pieces.
   e. Body Material: Bronze.
   f. Ends: Threaded.
   g. Seats: PTFE or TFE.
   h. Stem: Stainless steel.
   i. Ball: Stainless steel, vented.
   j. Port: Regular.

2.5 IRON BALL VALVES

A. Class 125, Iron Ball Valves:

1. Manufacturers: Subject to compliance with requirements, provide products by one (1) of the following available manufacturers offering products that may be incorporated into the Work include, but are not limited to, the following:

   a. Watts.
   b. Kitz
   c. Apollo.

2. Description:

   a. Standard: MSS SP-72.
   b. CWP Rating: 200 psig.
   c. Body Design: Split body.
   d. Body Material: ASTM A126, gray iron.
   e. Ends: Flanged.
   f. Seats: PTFE or TFE.
   g. Stem: Stainless steel.
   h. Ball: Stainless steel.
   i. Port: Full.

2.6 IRON, SINGLE-FLANGE BUTTERFLY VALVES

A. 200 CWP, Iron, Single-Flange Butterfly Valves with EPDM Seat and Aluminum-Bronze Disc:

1. Manufacturers: Subject to compliance with requirements, provide products by one (1) of the following available manufacturers offering products that may be incorporated into the Work include, but are not limited to, the following:

a. Watts.
b. Nibco
c. Apollo.

2. Description:

a. Standard: MSS SP-67, Type I.
b. CWP Rating: 200 psig.
c. Body Design: Lug type; suitable for bidirectional dead-end service at rated pressure without use of downstream flange.
d. Body Material: ASTM A126, cast iron or ASTM A536, ductile iron.
e. Seat: EPDM.
f. Stem: One- or two-piece stainless steel.
g. Disc: Aluminum bronze.

B. 200 CWP, Iron, Single-Flange Butterfly Valves with NBR Seat and Aluminum-Bronze Disc:

1. Manufacturers: Subject to compliance with requirements, provide products by one (1) of the following available manufacturers offering products that may be incorporated into the Work include, but are not limited to, the following:

a. Watts.
b. Nibco
c. Apollo.

2. Description:

a. Standard: MSS SP-67, Type I.
b. CWP Rating: 200 psig.
c. Body Design: Lug type; suitable for bidirectional dead-end service at rated pressure without use of downstream flange.
d. Body Material: ASTM A126, cast iron or ASTM A536, ductile iron.
e. Seat: NBR.
f. Stem: One- or two-piece stainless steel.
g. Disc: Aluminum bronze.

C. 200 CWP, Iron, Single-Flange Butterfly Valves with EPDM Seat and Ductile-Iron Disc:

1. Manufacturers: Subject to compliance with requirements, provide products by one (1) of the following available manufacturers offering products that may be incorporated into the Work include, but are not limited to, the following:

a. Watts.
b. Nibco
c. Apollo.

2. Description:

a. Standard: MSS SP-67, Type I.
b. CWP Rating: 200 psig.
c. Body Design: Lug type; suitable for bidirectional dead-end service at rated pressure without use of downstream flange.
d. Body Material: ASTM A126, cast iron or ASTM A536, ductile iron.
e. Seat: EPDM.
f. Stem: One- or two-piece stainless steel.

g. Disc: Nickel-plated [or -coated] ductile iron.

D. 200 CWP, Iron, Single-Flange Butterfly Valves with NBR Seat and Ductile-Iron Disc:

1. Manufacturers: Subject to compliance with requirements, provide products by one (1) of the following available manufacturers offering products that may be incorporated into the Work include, but are not limited to, the following:

a. Watts.
b. Nibco
c. Apollo.

2. Description:

a. Standard: MSS SP-67, Type I.
b. CWP Rating: 200 psig.
c. Body Design: Lug type; suitable for bidirectional dead-end service at rated pressure without use of downstream flange.
d. Body Material: ASTM A126, cast iron or ASTM A536, ductile iron.
e. Seat: NBR.
f. Stem: One- or two-piece stainless steel.
g. Disc: Nickel-plated or -coated ductile iron.

E. 200 CWP, Iron, Single-Flange Butterfly Valves with EPDM Seat and Stainless-Steel Disc:

1. Manufacturers: Subject to compliance with requirements, provide products by one (1) of the following available manufacturers offering products that may be incorporated into the Work include, but are not limited to, the following:

a. Watts.
b. Nibco
c. Apollo.

2. Description:

a. Standard: MSS SP-67, Type I.
b. CWP Rating: 200 psig.
c. Body Design: Lug type; suitable for bidirectional dead-end service at rated pressure without use of downstream flange.
d. Body Material: ASTM A126, cast iron or ASTM A536, ductile iron.
e. Seat: EPDM.
f. Stem: One- or two-piece stainless steel.
g. Disc: Stainless steel.

F. 200 CWP, Iron, Single-Flange Butterfly Valves with NBR Seat and Stainless-Steel Disc:

1. Manufacturers: Subject to compliance with requirements, provide products by one (1) of the following available manufacturers offering products that may be incorporated into the Work include, but are not limited to, the following:

a. Watts.
b. Nibco
c. Apollo.

2. Description:

a. Standard: MSS SP-67, Type I.
b. CWP Rating: 200 psig.
c. Body Design: Lug type; suitable for bidirectional dead-end service at rated pressure without use of downstream flange.
d. Body Material: ASTM A126, cast iron or ASTM A536, ductile iron.
e. Seat: NBR.
f. Stem: One- or two-piece stainless steel.
g. Disc: Stainless steel.

2.7 IRON, GROOVED-END BUTTERFLY VALVES

A. 175 CWP, Iron, Grooved-End Butterfly Valves:

1. Manufacturers: Subject to compliance with requirements, provide products by one (1) of the following available manufacturers offering products that may be incorporated into the Work include, but are not limited to, the following:

a. Watts.
b. Nibco
c. Victaulic Company.

B. Description:

a. Standard: MSS SP-67, Type I.
b. CWP Rating: 175 psig.
c. Body Material: Coated, ductile iron.
d. Stem: Two-piece stainless steel.
e. Disc: Coated, ductile iron.
f. Seal: EPDM.

C. 300 CWP, Iron, Grooved-End Butterfly Valves:

1. Manufacturers: Subject to compliance with requirements, provide products by one (1) of the following available manufacturers offering products that may be incorporated into the Work include, but are not limited to, the following:

a. Watts.
b. Nibco
c. Victaulic Company.

2. Description:

a. Standard: MSS SP-67, Type I.
b. NPS 8 and Smaller CWP Rating: 300 psig.
c. NPS 10 and Larger CWP Rating: 200 psig.
d. Body Material: Coated, ductile iron.
e. Stem: Two-piece stainless steel.
f. Disc: Coated, ductile iron.
g. Seal: EPDM.

2.8 BRONZE SWING CHECK VALVES

A. Class 125, Bronze Swing Check Valves with Bronze Disc:

1. Manufacturers: Subject to compliance with requirements, provide products by one (1) of the following available manufacturers offering products that may be incorporated into the Work include, but are not limited to, the following:

   a. Watts.
   b. Nibco
   c. Apollo.

2. Description:

   a. Standard: MSS SP-80, Type 3.
   b. CWP Rating: 200 psig.
   c. Body Design: Horizontal flow.
   d. Body Material: ASTM B62, bronze.
   e. Ends: Threaded.
   f. Disc: Bronze.

B. Class 125, Bronze Swing Check Valves with Nonmetallic Disc:

1. Manufacturers: Subject to compliance with requirements, provide products by one (1) of the following available manufacturers offering products that may be incorporated into the Work include, but are not limited to, the following:

   a. Watts.
   b. Nibco
   c. Apollo.

2. Description:

   a. Standard: MSS SP-80, Type 4.
   b. CWP Rating: 200 psig.
   c. Body Design: Horizontal flow.
   d. Body Material: ASTM B62, bronze.
   e. Ends: Threaded.
   f. Disc: PTFE or TFE.

C. Class 150, Bronze Swing Check Valves with Bronze Disc:

1. Manufacturers: Subject to compliance with requirements, provide products by one (1) of the following available manufacturers offering products that may be incorporated into the Work include, but are not limited to, the following:

   a. Watts.
   b. Nibco
   c. Apollo.

2. Description:

   a. Standard: MSS SP-80, Type 3.
   b. CWP Rating: 300 psig.
   c. Body Design: Horizontal flow.
   d. Body Material: ASTM B62, bronze.
   e. Ends: Threaded.
   f. Disc: Bronze.

D. Class 150, Bronze Swing Check Valves with Nonmetallic Disc:

1. Manufacturers: Subject to compliance with requirements, provide products by one (1) of the following available manufacturers offering products that may be incorporated into the Work include, but are not limited to, the following:

   a. Watts.
   b. Nibco
   c. Apollo.

2. Description:

   a. Standard: MSS SP-80, Type 4.
   b. CWP Rating: 300 psig.
   c. Body Design: Horizontal flow.
   d. Body Material: ASTM B62, bronze.
   e. Ends: Threaded.
   f. Disc: PTFE or TFE.

2.9 IRON SWING CHECK VALVES

A. Class 125, Iron Swing Check Valves with Metal Seats:

1. Manufacturers: Subject to compliance with requirements, provide products by one (1) of the following available manufacturers offering products that may be incorporated into the Work include, but are not limited to, the following:

   a. Watts.
   b. Nibco
   c. Apollo.

2. Description:

   a. Standard: MSS SP-71, Type I.
   b. CWP Rating: 200 psig.
   c. Body Design: Clear or full waterway.
   d. Body Material: ASTM A126, gray iron with bolted bonnet.
   e. Ends: Flanged.
   f. Trim: Bronze.
   g. Gasket: Asbestos free.

B. Class 125, Iron Swing Check Valves with Nonmetallic-to-Metal Seats:

1. Manufacturers: Subject to compliance with requirements, provide products by one (1) of the following available manufacturers offering products that may be incorporated into the Work include, but are not limited to, the following:

   a. Watts.
   b. Nibco
   c. Apollo.

2. Description:

   a. Standard: MSS SP-71, Type I.

b. CWP Rating: 200 psig.
c. Body Design: Clear or full waterway.
d. Body Material: ASTM A126, gray iron with bolted bonnet.
e. Ends: Flanged.
f. Trim: Composition.
g. Seat Ring: Bronze.
h. Disc Holder: Bronze.
i. Disc: PTFE or TFE.
j. Gasket: Asbestos free.

C. Class 250, Iron Swing Check Valves with Metal Seats:

1. Manufacturers: Subject to compliance with requirements, provide products by one (1) of the following available manufacturers offering products that may be incorporated into the Work include, but are not limited to, the following:

a. Watts.
b. Nibco
c. Apollo.

2. Description:

a. Standard: MSS SP-71, Type I.
b. CWP Rating: 500 psig.
c. Body Design: Clear or full waterway.
d. Body Material: ASTM A126, gray iron with bolted bonnet.
e. Ends: Flanged.
f. Trim: Bronze.
g. Gasket: Asbestos free.

2.10 IRON, GROOVED-END SWING CHECK VALVES

A. 300 CWP, Iron, Grooved-End Swing Check Valves:

1. Manufacturers: Subject to compliance with requirements, provide products by one (1) of the following available manufacturers offering products that may be incorporated into the Work include, but are not limited to, the following:

a. Watts.
b. Nibco
c. Victaulic Company.

2. Description:

a. CWP Rating: 300 psig.
b. Body Material: ASTM A536, ductile iron.
c. Seal: EPDM.
d. Disc: Spring-operated, ductile iron or stainless steel.

2.11 IRON, CENTER-GUIDED CHECK VALVES

A. Class 125, Iron, Compact-Wafer, Center-Guided Check Valves with Metal Seat:

1. Manufacturers: Subject to compliance with requirements, provide products by one (1) of the following available manufacturers offering products that may be incorporated into the Work include, but are not limited to, the following:

   a. Watts.
   b. Nibco
   c. Apollo.

2. Description:

   a. Standard: MSS SP-125.
   b. CWP Rating: 200 psig.
   c. Body Material: ASTM A126, gray iron.
   d. Style: Compact wafer.
   e. Seat: Bronze.

B. Class 150, Iron, Compact-Wafer, Center-Guided Check Valves with Metal Seat:

1. Manufacturers: Subject to compliance with requirements, provide products by one (1) of the following available manufacturers offering products that may be incorporated into the Work include, but are not limited to, the following:

   a. Watts.
   b. Nibco
   c. Apollo.

2. Description:

   a. Standard: MSS SP-125.
   b. CWP Rating: 300 psig.
   c. Body Material: ASTM A395 or ASTM A536, ductile iron.
   d. Style: Compact wafer.
   e. Seat: Bronze.

C. Class 150, Iron, Globe, Center-Guided Check Valves with Metal Seat:

1. Manufacturers: Subject to compliance with requirements, provide products by one (1) of the following available manufacturers offering products that may be incorporated into the Work include, but are not limited to, the following:

   a. Watts.
   b. Nibco
   c. Apollo.

2. Description:

   a. Standard: MSS SP-125.
   b. CWP Rating: 300 psig.
   c. Body Material: ASTM A395 or ASTM A536, ductile iron.
   d. Style: Globe, spring loaded.
   e. Ends: Flanged.
   f. Seat: Bronze.

D. Class 250, Iron, Compact-Wafer, Center-Guided Check Valves with Metal Seat:

1. Manufacturers: Subject to compliance with requirements, provide products by one (1) of the following available manufacturers offering products that may be incorporated into the Work include, but are not limited to, the following:

   a. Watts.
   b. Nibco
   c. Apollo.

2. Description:

   a. Standard: MSS SP-125.
   b. CWP Rating: 400 psig.
   c. Body Material: ASTM A126, gray iron.
   d. Style: Compact wafer, spring loaded.
   e. Seat: Bronze.

E. Class 250, Iron, Globe, Center-Guided Check Valves with Metal Seat:

1. Manufacturers: Subject to compliance with requirements, provide products by one (1) of the following available manufacturers offering products that may be incorporated into the Work include, but are not limited to, the following:

   a. Watts.
   b. Nibco
   c. Apollo.

2. Description:

   a. Standard: MSS SP-125.
   b. CWP Rating: 400 psig.
   c. Body Material: ASTM A126, gray iron.
   d. Style: Globe, spring loaded.
   e. Ends: Flanged.
   f. Seat: Bronze.

F. Class 125, Iron, Compact-Wafer, Center-Guided Check Valves with Resilient Seat:

1. Manufacturers: Subject to compliance with requirements, provide products by one (1) of the following available manufacturers offering products that may be incorporated into the Work include, but are not limited to, the following:

   a. Watts.
   b. Nibco
   c. Apollo.

2. Description:

   a. Standard: MSS SP-125.
   b. CWP Rating: 200 psig.
   c. Body Material: ASTM A126, gray iron.
   d. Style: Compact wafer.
   e. Seat: EPDM.

G. Class 125, Iron, Globe, Center-Guided Check Valves with Resilient Seat:

1. Manufacturers: Subject to compliance with requirements, provide products by one (1) of the following available manufacturers offering products that may be incorporated into the Work include, but are not limited to, the following:

   a. Watts.
   b. Nibco
   c. Apollo.

2. Description:

   a. Standard: MSS SP-125.
   b. CWP Rating: 200 psig.
   c. Body Material: ASTM A126, gray iron.
   d. Style: Globe, spring loaded.
   e. Ends: Flanged.
   f. Seat: EPDM

H. Class 150, Iron, Compact-Wafer, Center-Guided Check Valves with Resilient Seat:

1. Manufacturers: Subject to compliance with requirements, provide products by one (1) of the following available manufacturers offering products that may be incorporated into the Work include, but are not limited to, the following:

   a. Nibco
   b. Val-Matic Valve & Manufacturing Corp.
   c. Cla-Val

2. Description:

   a. Standard: MSS SP-125.
   b. CWP Rating: 300 psig.
   c. Body Material: ASTM A395 or ASTM A536, ductile iron.
   d. Style: Compact wafer.
   e. Seat: EPDM.

I. Class 150, Iron, Globe, Center-Guided Check Valves with Resilient Seat:

1. Manufacturers: Subject to compliance with requirements, provide products by one (1) of the following available manufacturers offering products that may be incorporated into the Work include, but are not limited to, the following:

   a. Nibco
   b. Val-Matic Valve & Manufacturing Corp.
   c. Cla-Val

2. Description:

   a. Standard: MSS SP-125.
   b. CWP Rating: 300 psig.
   c. Body Material: ASTM A395 or ASTM A536, ductile iron.
   d. Style: Globe, spring loaded.
   e. Ends: Flanged.
   f. Seat: EPDM.

J. Class 250, Iron, Compact-Wafer, Center-Guided Check Valves with Resilient Seat:

1. Manufacturers: Subject to compliance with requirements, provide products by one (1) of the following available manufacturers offering products that may be incorporated into the Work include, but are not limited to, the following:

   a. Nibco
   b. Val-Matic Valve & Manufacturing Corp.
   c. Cla-Val

2. Description:

   a. Standard: MSS SP-125.
   b. CWP Rating: 400 psig.
   c. Body Material: ASTM A126, gray iron.
   d. Style: Compact wafer, spring loaded.
   e. Seat: EPDM.

K. Class 250, Iron, Globe, Center-Guided Check Valves with Resilient Seat:

1. Manufacturers: Subject to compliance with requirements, provide products by one (1) of the following available manufacturers offering products that may be incorporated into the Work include, but are not limited to, the following:

   a. Nibco
   b. Val-Matic Valve & Manufacturing Corp.
   c. Cla-Val

2. Description:

   a. Standard: MSS SP-125.
   b. CWP Rating: 400 psig.
   c. Body Material: ASTM A126, gray iron.
   d. Style: Globe, spring loaded.
   e. Ends: Flanged.
   f. Seat: EPDM.

L. Class 300, Iron, Compact-Wafer, Center-Guided Check Valves with Resilient Seat:

1. Manufacturers: Subject to compliance with requirements, provide products by one (1) of the following available manufacturers offering products that may be incorporated into the Work include, but are not limited to, the following:

   a. Nibco
   b. Val-Matic Valve & Manufacturing Corp.
   c. Cla-Val

2. Description:

   a. Standard: MSS SP-125.
   b. CWP Rating: 500 psig.
   c. Body Material: ASTM A395 or ASTM A536, ductile iron.
   d. Style: Compact wafer, spring loaded.
   e. Seat: EPDM.

M. Class 300, Iron, Globe, Center-Guided Check Valves with Resilient Seat:

1. Manufacturers: Subject to compliance with requirements, provide products by one (1) of the following available manufacturers offering products that may be incorporated into the Work include, but are not limited to, the following:

   a. Nibco
   b. Val-Matic Valve & Manufacturing Corp.
   c. Cla-Val

2. Description:

   a. Standard: MSS SP-125.
   b. CWP Rating: 500 psig.
   c. Body Material: ASTM A395 or ASTM A536, ductile iron.
   d. Style: Globe, spring loaded.
   e. Ends: Flanged.
   f. Seat: EPDM.

2.12 IRON, PLATE-TYPE CHECK VALVES

A. Class 125, Iron, Dual-Plate Check Valves with Metal Seat:

1. Manufacturers: Subject to compliance with requirements, provide products by one (1) of the following available manufacturers offering products that may be incorporated into the Work include, but are not limited to, the following:

   a. Powell Valve
   b. Crane Co.; Crane Valve Group; Crane Valves.
   c. Flomatic Corporation.

2. Description:

   a. Standard: API 594.
   b. CWP Rating: 200 psig.
   c. Body Design: Wafer, spring-loaded plates.
   d. Body Material: ASTM A126, gray iron.
   e. Seat: Bronze.

B. Class 150, Iron, Dual-Plate Check Valves with Metal Seat:

1. Manufacturers: Subject to compliance with requirements, provide products by one (1) of the following available manufacturers offering products that may be incorporated into the Work include, but are not limited to, the following:

   a. Powell Valve
   b. Crane Co.; Crane Valve Group; Crane Valves.
   c. Flomatic Corporation.

2. Description:

   a. Standard: API 594.
   b. CWP Rating: 300 psig.
   c. Body Design: Wafer, spring-loaded plates.
   d. Body Material: ASTM A395 or ASTM A536, ductile iron.
   e. Seat: Bronze.

C. Class 250, Iron, Dual-Plate Check Valves with Metal Seat:

1. Manufacturers: Subject to compliance with requirements, provide products by one (1) of the following available manufacturers offering products that may be incorporated into the Work include, but are not limited to, the following:

   a. Powell Valve
   b. Crane Co.; Crane Valve Group; Crane Valves.
   c. Flomatic Corporation.

2. Description:

   a. Standard: API 594.
   b. CWP Rating: 400 psig.
   c. Body Design: Wafer, spring-loaded plates.
   d. Body Material: ASTM A126, gray iron.
   e. Seat: Bronze.

D. Class 300, Iron, Dual-Plate Check Valves with Metal Seat:

1. Manufacturers: Subject to compliance with requirements, provide products by one (1) of the following available manufacturers offering products that may be incorporated into the Work include, but are not limited to, the following:

   a. Powell Valve
   b. Crane Co.; Crane Valve Group; Crane Valves.
   c. Flomatic Corporation.

2. Description:

   a. Standard: API 594.
   b. CWP Rating: 500 psig.
   c. Body Design: Wafer, spring-loaded plates.
   d. Body Material: ASTM A395 or ASTM A536, ductile iron.
   e. Seat: Bronze.

E. Class 125, Iron, Single-Plate Check Valves with Resilient Seat:

1. Manufacturers: Subject to compliance with requirements, provide products by one (1) of the following available manufacturers offering products that may be incorporated into the Work include, but are not limited to, the following:

   a. Powell Valve
   b. Crane Co.; Crane Valve Group; Crane Valves.
   c. Flomatic Corporation.

2. Description:

   a. Standard: API 594.
   b. CWP Rating: 200 psig.
   c. Body Design: Wafer, spring-loaded plate.
   d. Body Material: ASTM A126, gray iron.
   e. Seat: EPDM.

F. Class 125, Iron, Dual-Plate Check Valves with Resilient Seat:

1. Manufacturers: Subject to compliance with requirements, provide products by one (1) of the following available manufacturers offering products that may be incorporated into the Work include, but are not limited to, the following:

   a. Powell Valve
   b. Crane Co.; Crane Valve Group; Crane Valves.
   c. Flomatic Corporation.

2. Description:

   a. Standard: API 594.
   b. CWP Rating: 200 psig.
   c. Body Design: Wafer, spring-loaded plates.
   d. Body Material: ASTM A126, gray iron.
   e. Seat: EPDM.

G. Class 150, Iron, Dual-Plate Check Valves with Resilient Seat:

1. Manufacturers: Subject to compliance with requirements, provide products by one (1) of the following available manufacturers offering products that may be incorporated into the Work include, but are not limited to, the following:

   a. Powell Valve
   b. Crane Co.; Crane Valve Group; Crane Valves.
   c. Flomatic Corporation.

2. Description:

   a. Standard: API 594.
   b. CWP Rating: 300 psig.
   c. Body Design: Wafer, spring-loaded plates.
   d. Body Material: ASTM A395 or ASTM A536, ductile iron.
   e. Seat: EPDM.

H. Class 250, Iron, Wafer, Single-Plate Check Valves with Resilient Seat:

1. Manufacturers: Subject to compliance with requirements, provide products by one (1) of the following available manufacturers offering products that may be incorporated into the Work include, but are not limited to, the following:

   a. Powell Valve
   b. Crane Co.; Crane Valve Group; Crane Valves.
   c. Flomatic Corporation.

2. Description:

   a. Standard: API 594.
   b. CWP Rating: 400 psig.
   c. Body Design: Wafer, spring-loaded plate.
   d. Body Material: ASTM A126, gray iron.
   e. Seat: EPDM.

I. Class 250, Iron, Dual-Plate Check Valves with Resilient Seat:

1. Manufacturers: Subject to compliance with requirements, provide products by one (1) of the following available manufacturers offering products that may be incorporated into the Work include, but are not limited to, the following:

   a. Powell Valve
   b. Crane Co.; Crane Valve Group; Crane Valves.
   c. Flomatic Corporation.

2. Description:

   a. Standard: API 594.
   b. CWP Rating: 400 psig.
   c. Body Design: Wafer, spring-loaded plates.
   d. Body Material: ASTM A126, gray iron.
   e. Seat: EPDM.

J. Class 300, Iron, Dual-Plate Check Valves with Resilient Seat:

1. Manufacturers: Subject to compliance with requirements, provide products by one (1) of the following available manufacturers offering products that may be incorporated into the Work include, but are not limited to, the following:

   a. Powell Valve
   b. Crane Co.; Crane Valve Group; Crane Valves.
   c. Flomatic Corporation.

2. Description:

   a. Standard: API 594.
   b. CWP Rating: 500 psig.
   c. Body Design: Wafer, spring-loaded plates.
   d. Body Material: ASTM A395 or ASTM A536, ductile iron.
   e. Seat: EPDM.

2.13 BRONZE GATE VALVES

A. Class 125, NRS Bronze Gate Valves:

1. Manufacturers: Subject to compliance with requirements, provide products by one (1) of the following available manufacturers offering products that may be incorporated into the Work include, but are not limited to, the following:

   a. Watts.
   b. Nibco
   c. Apollo.

2. Description:

   a. Standard: MSS SP-80, Type 1.
   b. CWP Rating: 200 psig.
   c. Body Material: ASTM B62, bronze with integral seat and screw-in bonnet.
   d. Ends: Threaded [or solder joint].
   e. Stem: Bronze.
   f. Disc: Solid wedge; bronze.

g. Packing: Asbestos free.
h. Handwheel: Malleable iron[, bronze, or aluminum].

B. Class 125, RS Bronze Gate Valves:

1. Manufacturers: Subject to compliance with requirements, [provide products by one (1) of the following] [available manufacturers offering products that may be incorporated into the Work include, but are not limited to, the following]:

a. Watts.
b. Nibco
c. Apollo.

2. Description:

a. Standard: MSS SP-80, Type 2.
b. CWP Rating: 200 psig.
c. Body Material: ASTM B62, bronze with integral seat and screw-in bonnet.
d. Ends: Threaded [or solder joint].
e. Stem: Bronze.
f. Disc: Solid wedge; bronze.
g. Packing: Asbestos free.
h. Handwheel: Malleable iron[, bronze, or aluminum].

C. Class 150, NRS Bronze Gate Valves:

1. Manufacturers: Subject to compliance with requirements, provide products by one (1) of the following available manufacturers offering products that may be incorporated into the Work include, but are not limited to, the following:

a. Watts.
b. Nibco
c. Apollo.

2. Description:

a. Standard: MSS SP-80, Type 1.
b. CWP Rating: 300 psig.
c. Body Material: ASTM B62, bronze with integral seat and union-ring bonnet.
d. Ends: Threaded.
e. Stem: Bronze.
f. Disc: Solid wedge; bronze.
g. Packing: Asbestos free.
h. Handwheel: Malleable iron[, bronze, or aluminum].

D. Class 150, RS Bronze Gate Valves:

1. Manufacturers: Subject to compliance with requirements, provide products by one (1) of the following available manufacturers offering products that may be incorporated into the Work include, but are not limited to, the following:

a. Watts.
b. Nibco
c. Apollo.

2. Description:

a. Standard: MSS SP-80, Type 2.
b. CWP Rating: 300 psig.
c. Body Material: ASTM B62, bronze with integral seat and union-ring bonnet.
d. Ends: Threaded.
e. Stem: Bronze.
f. Disc: Solid wedge; bronze.
g. Packing: Asbestos free.
h. Handwheel: Malleable iron[, bronze, or aluminum].

2.14 IRON GATE VALVES

A. Class 125, NRS, Iron Gate Valves:

1. Manufacturers: Subject to compliance with requirements, provide products by one (1) of the following available manufacturers offering products that may be incorporated into the Work include, but are not limited to, the following:

a. Watts.
b. Nibco
c. Apollo.

2. Description:

a. Standard: MSS SP-70, Type I.
b. CWP Rating: 200 psig.
c. Body Material: ASTM A126, gray iron with bolted bonnet.
d. Ends: Flanged.
e. Trim: Bronze.
f. Disc: Solid wedge.
g. Packing and Gasket: Asbestos free.

B. Class 125, OS&Y, Iron Gate Valves:

1. Manufacturers: Subject to compliance with requirements, provide products by one (1) of the following available manufacturers offering products that may be incorporated into the Work include, but are not limited to, the following:

a. Watts.
b. Nibco
c. Apollo.

2. Description:

a. Standard: MSS SP-70, Type I.
b. CWP Rating: 200 psig.
c. Body Material: ASTM A126, gray iron with bolted bonnet.
d. Ends: Flanged.
e. Trim: Bronze.
f. Disc: Solid wedge.
g. Packing and Gasket: Asbestos free.

C. Class 250, NRS, Iron Gate Valves:

1. Manufacturers: Subject to compliance with requirements, provide products by one (1) of the following available manufacturers offering products that may be incorporated into the Work include, but are not limited to, the following:

   a. Watts.
   b. Nibco
   c. Apollo.

2. Description:

   a. Standard: MSS SP-70, Type I.
   b. CWP Rating: 500 psig.
   c. Body Material: ASTM A126, gray iron with bolted bonnet.
   d. Ends: Flanged.
   e. Trim: Bronze.
   f. Disc: Solid wedge.
   g. Packing and Gasket: Asbestos free.

D. Class 250, OS&Y, Iron Gate Valves:

1. Manufacturers: Subject to compliance with requirements, provide products by one (1) of the following available manufacturers offering products that may be incorporated into the Work include, but are not limited to, the following:

   a. Watts.
   b. Nibco
   c. Apollo.

2. Description:

   a. Standard: MSS SP-70, Type I.
   b. CWP Rating: 500 psig.
   c. Body Material: ASTM A126, gray iron with bolted bonnet.
   d. Ends: Flanged.
   e. Trim: Bronze.
   f. Disc: Solid wedge.
   g. Packing and Gasket: Asbestos free.

2.15 BRONZE GLOBE VALVES

A. Class 125, Bronze Globe Valves with Bronze Disc:

1. Manufacturers: Subject to compliance with requirements, provide products by one (1) of the following available manufacturers offering products that may be incorporated into the Work include, but are not limited to, the following:

   a. Watts.
   b. Nibco
   c. Apollo.

2. Description:

   a. Standard: MSS SP-80, Type 1.
   b. CWP Rating: 200 psig.

c. Body Material: ASTM B62, bronze with integral seat and screw-in bonnet.
d. Ends: Threaded or solder joint.
e. Stem and Disc: Bronze.
f. Packing: Asbestos free.
g. Handwheel: Malleable iron[, bronze, or aluminum].

B. Class 125, Bronze Globe Valves with Nonmetallic Disc:

1. Manufacturers: Subject to compliance with requirements, provide products by one (1) of the following available manufacturers offering products that may be incorporated into the Work include, but are not limited to, the following:

a. Watts.
b. Nibco
c. Apollo.

2. Description:

a. Standard: MSS SP-80, Type 2.
b. CWP Rating: 200 psig.
c. Body Material: ASTM B62, bronze with integral seat and screw-in bonnet.
d. Ends: Threaded or solder joint.
e. Stem: Bronze.
f. Disc: PTFE or TFE.
g. Packing: Asbestos free.
h. Handwheel: Malleable iron, bronze, or aluminum.

C. Class 150, Bronze Globe Valves with Nonmetallic Disc:

1. Manufacturers: Subject to compliance with requirements, provide products by one (1) of the following available manufacturers offering products that may be incorporated into the Work include, but are not limited to, the following]:

a. Watts.
b. Nibco
c. Apollo.

2. Description:

a. Standard: MSS SP-80, Type 2.
b. CWP Rating: 300 psig.
c. Body Material: ASTM B62, bronze with integral seat and union-ring bonnet.
d. Ends: Threaded.
e. Stem: Bronze.
f. Disc: PTFE or TFE.
g. Packing: Asbestos free.
h. Handwheel: Malleable iron, bronze, or aluminum.

2.16 IRON GLOBE VALVES

A. Class 125, Iron Globe Valves:

1. Manufacturers: Subject to compliance with requirements, provide products by one (1) of the following available manufacturers offering products that may be incorporated into the Work include, but are not limited to, the following]:

   a. Watts.
   b. Nibco
   c. Apollo.

2. Description:

   a. Standard: MSS SP-85, Type I.
   b. CWP Rating: 200 psig.
   c. Body Material: ASTM A126, gray iron with bolted bonnet.
   d. Ends: Flanged.
   e. Trim: Bronze.
   f. Packing and Gasket: Asbestos free.

B. Class 250, Iron Globe Valves:

1. Manufacturers: Subject to compliance with requirements, provide products by one (1) of the following available manufacturers offering products that may be incorporated into the Work include, but are not limited to, the following:

   a. Watts.
   b. Nibco
   c. Apollo.

2. Description:

   a. Standard: MSS SP-85, Type I.
   b. CWP Rating: 500 psig.
   c. Body Material: ASTM A126, gray iron with bolted bonnet.
   d. Ends: Flanged.
   e. Trim: Bronze.
   f. Packing and Gasket: Asbestos free.

2.17 LUBRICATED PLUG VALVES

A. Class 125, Regular-Gland, Lubricated Plug Valves with Threaded Ends:

1. Manufacturers: Subject to compliance with requirements, provide products by one (1) of the following available manufacturers offering products that may be incorporated into the Work include, but are not limited to, the following:

   a. Nordstrom Valves, Inc.
   b. Homestead Valve.
   c. Mueller

2. Description:

   a. Standard: MSS SP-78, Type II.
   b. CWP Rating: 200 psig.
   c. Body Material: ASTM A48 or ASTM A126, cast iron with lubrication-sealing system.

d. Pattern: Regular
e. Plug: Cast iron or bronze with sealant groove.

B. Class 125, Regular-Gland, Lubricated Plug Valves with Flanged Ends:

1. Manufacturers: Subject to compliance with requirements, provide products by one (1) of the following available manufacturers offering products that may be incorporated into the Work include, but are not limited to, the following:

a. Nordstrom Valves, Inc.
b. Homestead Valve.
c. Mueller

2. Description:

a. Standard: MSS SP-78, Type II.
b. CWP Rating: 200 psig.
c. Body Material: ASTM A48 or ASTM A126, cast iron with lubrication-sealing system.
d. Pattern: Regular
e. Plug: Cast iron or bronze with sealant groove.

C. Class 125, Cylindrical, Lubricated Plug Valves with Threaded Ends:

1. Manufacturers: Subject to compliance with requirements, provide products by one (1) of the following available manufacturers offering products that may be incorporated into the Work include, but are not limited to, the following:

a. Nordstrom Valves, Inc.
b. Homestead Valve.
c. Mueller

2. Description:

a. Standard: MSS SP-78, Type IV.
b. CWP Rating: 200 psig.
c. Body Material: ASTM A48 or ASTM A126, cast iron with lubrication-sealing system.
d. Pattern: Regular.
e. Plug: Cast iron or bronze with sealant groove.

D. Class 125, Cylindrical, Lubricated Plug Valves with Flanged Ends:

1. Manufacturers: Subject to compliance with requirements, provide products by one (1) of the following available manufacturers offering products that may be incorporated into the Work include, but are not limited to, the following:

a. Nordstrom Valves, Inc.
b. Homestead Valve.
c. Mueller

2. Description:

a. Standard: MSS SP-78, Type IV.
b. CWP Rating: 200 psig.

c. Body Material: ASTM A48 or ASTM A126, cast iron with lubrication-sealing system.
d. Pattern: Regular
e. Plug: Cast iron or bronze with sealant groove.

E. Class 250, Regular-Gland, Lubricated Plug Valves with Threaded Ends:

1. Manufacturers: Subject to compliance with requirements, provide products by one (1) of the following available manufacturers offering products that may be incorporated into the Work include, but are not limited to, the following:

a. Nordstrom Valves, Inc.
b. Homestead Valve.
c. Mueller

2. Description:

a. Standard: MSS SP-78, Type II.
b. CWP Rating: 400 psig.
c. Body Material: ASTM A48 or ASTM A126, cast iron with lubrication-sealing system.
d. Pattern: Regular
e. Plug: Cast iron or bronze with sealant groove.

F. Class 250, Regular-Gland, Lubricated Plug Valves with Flanged Ends:

1. Manufacturers: Subject to compliance with requirements, provide products by one (1) of the following available manufacturers offering products that may be incorporated into the Work include, but are not limited to, the following:

a. Nordstrom Valves, Inc.
b. Homestead Valve.
c. Mueller

2. Description:

a. Standard: MSS SP-78, Type II.
b. CWP Rating: 400 psig.
c. Body Material: ASTM A48 or ASTM A126, cast iron with lubrication-sealing system.
d. Pattern: Regular.
e. Plug: Cast iron or bronze with sealant groove.

G. Class 250, Cylindrical, Lubricated Plug Valves with Threaded Ends:

1. Manufacturers: Subject to compliance with requirements, provide products by one (1) of the following available manufacturers offering products that may be incorporated into the Work include, but are not limited to, the following:

a. Nordstrom Valves, Inc.
b. Homestead Valve.
c. Mueller

2. Description:

a. Standard: MSS SP-78, Type IV.
b. CWP Rating: 400 psig.
c. Body Material: ASTM A48 or ASTM A126, cast iron with lubrication-sealing system.
d. Pattern: Regular.
e. Plug: Cast iron or bronze with sealant groove.

H. Class 250, Cylindrical, Lubricated Plug Valves with Flanged Ends:

1. Manufacturers: Subject to compliance with requirements, provide products by one (1) of the following available manufacturers offering products that may be incorporated into the Work include, but are not limited to, the following:

a. Nordstrom Valves, Inc.
b. Homestead Valve.
c. Mueller

2. Description:

a. Standard: MSS SP-78, Type IV.
b. CWP Rating: 400 psig.
c. Body Material: ASTM A48 or ASTM A126, Grade 40 cast iron with lubrication-sealing system.
d. Pattern: Regular.
e. Plug: Cast iron or bronze with sealant groove.

2.18 CHAINWHEELS

A. Manufacturers: Subject to compliance with requirements, provide products by one (1) of the following available manufacturers offering products that may be incorporated into the Work include, but are not limited to, the following:

1. Babbitt Steam Specialty Co.
2. Roto Hammer Industries.
3. Trumbull Industries.

B. Description: Valve actuation assembly with sprocket rim, brackets, and chain.

1. Brackets: Type, number, size, and fasteners required to mount actuator on valve.
2. Attachment: For connection to ball, gate, butterfly and plug valve stems.
3. Sprocket Rim with Chain Guides: Cast iron, of type and size required for valve. Include zinc coating.
4. Chain: Hot-dip, galvanized steel, of size required to fit sprocket rim.

PART 3 - EXECUTION

3.1 EXAMINATION

A. Examine valve interior for cleanliness, freedom from foreign matter, and corrosion. Remove special packing materials, such as blocks, used to prevent disc movement during shipping and handling.

B. Operate valves in positions from fully open to fully closed. Examine guides and seats made accessible by such operations.

C. Examine threads on valve and mating pipe for form and cleanliness.

D. Examine mating flange faces for conditions that might cause leakage. Check bolting for proper size, length, and material. Verify that gasket is of proper size, that its material composition is suitable for service, and that it is free from defects and damage.

E. Do not attempt to repair defective valves; replace with new valves.

3.2 VALVE INSTALLATION

A. Install valves with unions or flanges at each piece of equipment arranged to allow service, maintenance, and equipment removal without system shutdown.

B. Locate valves for easy access and provide separate support where necessary.

C. Install valves in horizontal piping with stem at or above center of pipe.

D. Install valves in position to allow full stem movement.

E. Install chainwheels on operators for all valves NPS 4 and larger and more than 96 inches above floor. Extend chains to 60 inches above finished floor.

F. Install check valves for proper direction of flow and as follows:

1. Swing Check Valves: In horizontal position with hinge pin level.
2. Center-Guided and Plate-Type Check Valves: In horizontal or vertical position, between flanges.
3. Lift Check Valves: With stem upright and plumb.

3.3 ADJUSTING

A. Adjust or replace valve packing after piping systems have been tested and put into service but before final adjusting and balancing. Replace valves if persistent leaking occurs.

3.4 GENERAL REQUIREMENTS FOR VALVE APPLICATIONS

A. If valve applications are not indicated, use the following:

1. Shutoff Service: Ball, butterfly, or gate valves.
2. Butterfly Valve Dead-End Service: Single-flange (lug) type.
3. Throttling Service: Globe or angle valves.
4. Pump-Discharge Check Valves:

a. NPS 2 and Smaller: Bronze swing check valves with bronze disc.

b. NPS 2-1/2 and Larger for Domestic Water: Iron swing check valves with lever and weight or with spring or iron, center-guided, resilient-seat check valves.

B. If valves with specified SWP classes or CWP ratings are not available, the same types of valves with higher SWP classes or CWP ratings may be substituted.

C. Select valves, except wafer types, with the following end connections:

1. For Copper Tubing, NPS 2 and Smaller: Threaded ends except where solder-joint valve-end option is indicated in valve schedules below.
2. For Copper Tubing, NPS 2-1/2 to NPS 4: Flanged ends except where threaded valve-end option is indicated in valve schedules below.
3. For Copper Tubing, NPS 5 and Larger: Flanged ends.
4. For Steel Piping, NPS 2 and Smaller: Threaded ends.
5. For Steel Piping, NPS 2-1/2 to NPS 4: Flanged ends except where threaded valve-end option is indicated in valve schedules below.
6. For Steel Piping, NPS 5 and Larger: Flanged ends.
7. For Grooved-End Copper Tubing and Steel Piping: Valve ends may be grooved.

3.5 LOW-PRESSURE, COMPRESSED-AIR VALVE SCHEDULE (150 PSIG OR LESS)

A. Pipe NPS 2 and Smaller:

1. Bronze Valves: May be provided with solder-joint ends instead of threaded ends.
2. Ball Valves: Two (2) piece, full port, bronze with stainless-steel trim.
3. Bronze Lift Check Valves: Class 125, nonmetallic disc.
4. Bronze Swing Check Valves: [Class 125] [Class 150], nonmetallic disc.
5. Bronze Gate Valves: [Class 125] [Class 150], RS.

B. Pipe NPS 2-1/2 and Larger:

1. Iron Valves, NPS 2-1/2 to NPS 4: May be provided with threaded ends instead of flanged ends.
2. Iron Swing Check Valves: Class 250, nonmetallic-to-metal seats.
3. Iron, Grooved-End Swing Check Valves: 300 CWP.
4. Iron Gate Valves: Class 250, OS&Y.

3.6 DOMESTIC, HOT- AND COLD-WATER VALVE SCHEDULE

A. Pipe NPS 2 and Smaller:

1. Bronze Valves: May be provided with solder-joint ends instead of threaded ends.
2. Ball Valves: Two (2) piece, full port, bronze with stainless steel trim.
3. Bronze Swing Check Valves: Class 125 Class 150, nonmetallic disc.
4. Bronze Gate Valves: Class 125, RS.
5. Bronze Globe Valves: Class 125 nonmetallic disc.

B. Pipe NPS 2-1/2 and Larger:

1. Iron Valves, NPS 2-1/2 to NPS 4: May be provided with threaded ends instead of flanged ends.
2. Iron Ball Valves: Class 150.
3. Iron, Single-Flange Butterfly Valves: 200 CWP, EPDM seat, stainless steel disc.
4. Iron, Grooved-End Butterfly Valves: 175 CWP.
5. Iron Swing Check Valves: Class 125 nonmetallic-to-metal seats.
6. Iron Swing Check Valves with Closure Control: Class 125, lever and spring weight.

7. Iron, Grooved-End Swing Check Valves: 300 CWP.
8. Iron, Center-Guided Check Valves: Class 125, compact-wafer resilient seat.
9. Iron Gate Valves: Class 125 OS&Y.
10. Iron Globe Valves: Class 125.

END OF SECTION 22 05 23

SECTION 22 05 29 - HANGERS & SUPPORTS FOR PLUMBING PIPING & EQUIPMENT

PART 1 - GENERAL

1.1 RELATED DOCUMENTS

A. Drawings and general provisions of the Contract, including General and Supplementary Conditions and Division 01 specification sections, apply to this section.

1.2 SECTION INCLUDES

A. Metal pipe hangers and supports.

B. Trapeze pipe hangers.

C. Metal framing systems.

D. Thermal-hanger shield inserts.

E. Fastener systems.

F. Pipe stands.

G. Pipe positioning systems.

H. Equipment supports.

1.3 RELATED SECTIONS

A. Section 05 50 00 - Metal Fabrications: Structural steel shapes and plates for trapeze hangers for pipe and equipment supports.

B. Division 21 fire-suppression piping sections for pipe hangers for fire-suppression piping.

C. Section 22 05 16 - Expansion Fittings and Loops for Plumbing Piping: Pipe guides and anchors.

D. Section 22 05 48 - Vibration and Seismic Controls for Plumbing Piping and Equipment: Vibration isolation devices.

1.4 DEFINITIONS

A. MSS: Manufacturers Standardization Society of The Valve and Fittings Industry Inc.

1.5 PERFORMANCE REQUIREMENTS

A. Delegated Design: Design trapeze pipe hangers and equipment supports, including comprehensive engineering analysis by a qualified professional engineer, using performance requirements and design criteria indicated.

B. Structural Performance: Hangers and supports for plumbing piping and equipment shall withstand the effects of gravity loads and stresses within limits and under conditions indicated according to ASCE 7.

1. Design supports for multiple pipes, including pipe stands, capable of supporting combined weight of supported systems, system contents, and test water.
2. Design equipment supports capable of supporting combined operating weight of supported equipment and connected systems and components.
3. Design seismic-restraint hangers and supports for piping and equipment.

1.6 SUBMITTALS

A. Submit under provisions of Section 01 33 00.

B. Product Data: For each type of product indicated.

C. Shop Drawings: Signed and sealed by a qualified professional engineer. Show fabrication and installation details and include calculations for the following; include product data for components:

1. Trapeze pipe hangers.
2. Metal framing systems.
3. Pipe stands.
4. Equipment supports.

D. Delegated-Design Submittal: For trapeze hangers indicated to comply with performance requirements and design criteria, including analysis data signed and sealed by the qualified professional engineer responsible for their preparation.

1. Detail fabrication and assembly of trapeze hangers.
2. Design Calculations: Calculate requirements for designing trapeze hangers.

E. Welding certificates.

1.7 QUALITY ASSURANCE

A. Structural Steel Welding Qualifications: Qualify procedures and personnel according to AWS D1.1, "Structural Welding Code - Steel."

B. Pipe Welding Qualifications: Qualify procedures and operators according to ASME Boiler and Pressure Vessel Code.

PART 2 - PRODUCTS

2.1 METAL PIPE HANGERS AND SUPPORTS

A. Carbon-Steel Pipe Hangers and Supports:

1. Description: MSS SP-58, Types 1 through 58, factory-fabricated components.
2. Galvanized Metallic Coatings: Pregalvanized or hot dipped.
3. Nonmetallic Coatings: Plastic coating, jacket, or liner.

4. Padded Hangers: Hanger with fiberglass or other pipe insulation pad or cushion to support bearing surface of piping.
5. Hanger Rods: Continuous-thread rod, nuts, and washer made of carbon steel.

B. Stainless Steel Pipe Hangers and Supports:

1. Description: MSS SP-58, Types 1 through 58, factory-fabricated components.
2. Padded Hangers: Hanger with fiberglass or other pipe insulation pad or cushion to support bearing surface of piping.
3. Hanger Rods: Continuous-thread rod, nuts, and washer made of stainless steel.

C. Copper Pipe Hangers:

1. Description: MSS SP-58, Types 1 through 58, copper-coated-steel, factory-fabricated components.
2. Hanger Rods: Continuous-thread rod, nuts, and washer made of copper-coated steel.

2.2 TRAPEZE PIPE HANGERS

A. Description: MSS SP-69, Type 59, shop- or field-fabricated pipe-support assembly made from structural carbon-steel shapes with MSS SP-58 carbon-steel hanger rods, nuts, saddles, and U-bolts.

2.3 METAL FRAMING SYSTEMS

A. MFMA Manufacturer Metal Framing Systems:

1. Manufacturers: Subject to compliance with requirements, provide products by one (1) of the following available manufacturers offering products that may be incorporated into the Work include, but are not limited to, the following:

   a. Allied Tube & Conduit.
   b. Cooper B-Line, Inc.
   c. Unistrut Corporation; Tyco International, Ltd.

2. Description: Shop- or field-fabricated pipe-support assembly for supporting multiple parallel pipes.
3. Standard: MFMA-4.
4. Channels: Continuous slotted steel channel with inturned lips.
5. Channel Nuts: Formed or stamped steel nuts or other devices designed to fit into channel slot and, when tightened, prevent slipping along channel.
6. Hanger Rods: Continuous-thread rod, nuts, and washer made of carbon steel.
7. Metallic Coating: Electroplated zinc
8. Paint Coating: Vinyl alkyd

B. Non-MFMA Manufacturer Metal Framing Systems:

1. Manufacturers: Subject to compliance with requirements, provide products by one (1) of the following available manufacturers offering products that may be incorporated into the Work include, but are not limited to, the following:

   a. Anvil International; a subsidiary of Mueller Water Products Inc.
   b. Empire Industries, Inc.

c. NIBCO INC.

2. Description: Shop- or field-fabricated pipe-support assembly made of steel channels, accessories, fittings, and other components for supporting multiple parallel pipes.
3. Standard: Comply with MFMA-4.
4. Channels: Continuous slotted steel channel with inturned lips.
5. Channel Nuts: Formed or stamped steel nuts or other devices designed to fit into channel slot and, when tightened, prevent slipping along channel.
6. Hanger Rods: Continuous-thread rod, nuts, and washer made of carbon steel.
7. Coating: Paint.

2.4 THERMAL-HANGER SHIELD INSERTS

A. Manufacturers: Subject to compliance with requirements, provide products by one (1) of the following available manufacturers offering products that may be incorporated into the Work include, but are not limited to, the following:

1. Thermal Pipe Shields Inc.
2. Cooper Industries.
3. Anvil.

B. Insulation-Insert Material for Cold Piping: ASTM C552, Type II cellular glass with 100-psig minimum compressive strength and vapor barrier.

C. Insulation-Insert Material for Hot Piping: ASTM C552, Type II cellular glass with 100-psig minimum compressive strength.

D. For Trapeze or Clamped Systems: Insert and shield shall cover entire circumference of pipe.

E. For Clevis or Band Hangers: Insert and shield shall cover lower 180 degrees of pipe.

F. Insert Length: Extend two (2) inches beyond sheet metal shield for piping operating below ambient air temperature.

2.5 FASTENER SYSTEMS

A. Powder-Actuated Fasteners: Threaded-steel stud, for use in hardened portland cement concrete with pull-out, tension, and shear capacities appropriate for supported loads and building materials where used.

B. Mechanical-Expansion Anchors: Insert-wedge-type, [zinc-coated] [stainless] steel anchors, for use in hardened portland cement concrete; with pull-out, tension, and shear capacities appropriate for supported loads and building materials where used.

2.6 PIPE STANDS

A. General Requirements for Pipe Stands: Shop- or field-fabricated assemblies made of manufactured corrosion-resistant components to support roof-mounted piping.

B. Compact Pipe Stand: One-piece plastic unit with integral-rod roller, pipe clamps, or V-shaped cradle to support pipe, for roof installation without membrane penetration.

C. Low-Type, Single-Pipe Stand: One-piece [plastic] [stainless steel] base unit with plastic roller, for roof installation without membrane penetration.

D. High-Type, Single-Pipe Stand:

1. Description: Assembly of base, vertical and horizontal members, and pipe support, for roof installation without membrane penetration.
2. Base: [Plastic] [Stainless steel].
3. Vertical Members: Two (2) or more cadmium-plated-steel or stainless steel, continuous-thread rods.
4. Horizontal Member: Cadmium-plated-steel or stainless steel rod with plastic or stainless steel, roller-type pipe support.

E. High-Type, Multiple-Pipe Stand:

1. Description: Assembly of bases, vertical and horizontal members, and pipe supports, for roof installation without membrane penetration.
2. Bases: One (1) or more; plastic.
3. Vertical Members: Two (2) or more protective-coated-steel channels.
4. Horizontal Member: Protective-coated-steel channel.
5. Pipe Supports: Galvanized steel, clevis-type pipe hangers.

F. Curb-Mounting-Type Pipe Stands: Shop- or field-fabricated pipe supports made from structural-steel shapes, continuous-thread rods, and rollers, for mounting on permanent stationary roof curb.

2.7 PIPE POSITIONING SYSTEMS

A. Description: IAPMO PS 42, positioning system of metal brackets, clips, and straps for positioning piping in pipe spaces; for plumbing fixtures in commercial applications.

2.8 EQUIPMENT SUPPORTS

A. Description: Welded, shop- or field-fabricated equipment support made from structural carbon-steel shapes.

2.9 MISCELLANEOUS MATERIALS

A. Structural Steel: ASTM A36, carbon-steel plates, shapes, and bars; black and galvanized.

B. Grout: ASTM C1107, factory-mixed and -packaged, dry, hydraulic-cement, non-shrink and nonmetallic grout; suitable for interior and exterior applications.

1. Properties: Nonstaining, noncorrosive, and nongaseous.
2. Design Mix: 5000-psi, 28-day compressive strength.

PART 3 - EXECUTION

3.1 HANGER AND SUPPORT INSTALLATION

A. Metal Pipe-Hanger Installation: Comply with MSS SP-69 and MSS SP-89. Install hangers, supports, clamps, and attachments as required to properly support piping from the building structure.

B. Metal Trapeze Pipe-Hanger Installation: Comply with MSS SP-69 and MSS SP-89. Arrange for grouping of parallel runs of horizontal piping, and support together on field-fabricated trapeze pipe hangers.

1. Pipes of Various Sizes: Support together and space trapezes for smallest pipe size or install intermediate supports for smaller diameter pipes as specified for individual pipe hangers.
2. Field fabricate from ASTM A36, carbon-steel shapes selected for loads being supported. Weld steel according to AWS D1.1.

C. Fiberglass Pipe-Hanger Installation: Comply with applicable portions of MSS SP-69 and MSS SP-89. Install hangers and attachments as required to properly support piping from building structure.

D. Metal Framing System Installation: Arrange for grouping of parallel runs of piping, and support together on field-assembled metal framing systems.

E. Thermal-Hanger Shield Installation: Install in pipe hanger or shield for insulated piping.

F. Fastener System Installation:

1. Install powder-actuated fasteners for use in lightweight concrete or concrete slabs less than four (4) inches thick in concrete after concrete is placed and completely cured. Use operators that are licensed by powder-actuated tool manufacturer. Install fasteners according to powder-actuated tool manufacturer's operating manual.
2. Install mechanical-expansion anchors in concrete after concrete is placed and completely cured. Install fasteners according to manufacturer's written instructions.

G. Pipe Stand Installation:

1. Pipe Stand Types except Curb-Mounted Type: Assemble components and mount on smooth roof surface. Do not penetrate roof membrane.
2. Curb-Mounted-Type Pipe Stands: Assemble components or fabricate pipe stand and mount on permanent, stationary roof curb. See Section 07 72 00 for curbs.

H. Pipe Positioning-System Installation: Install support devices to make rigid supply and waste piping connections to each plumbing fixture. See Division 22 plumbing fixture sections for requirements for pipe positioning systems for plumbing fixtures.

I. Install hangers and supports complete with necessary attachments, inserts, bolts, rods, nuts, washers, and other accessories.

J. Equipment Support Installation: Fabricate from welded-structural-steel shapes.

K. Install hangers and supports to allow controlled thermal and seismic movement of piping systems, to permit freedom of movement between pipe anchors, and to facilitate action of expansion joints, expansion loops, expansion bends, and similar units.

L. Install lateral bracing with pipe hangers and supports to prevent swaying.

M. Install building attachments within concrete slabs or attach to structural steel. Install additional attachments at concentrated loads, including valves, flanges, and strainers, [NPS 2-1/2] [Insert size] and larger and at changes in direction of piping. Install concrete inserts before concrete is placed; fasten inserts to forms and install reinforcing bars through openings at top of inserts.

N. Load Distribution: Install hangers and supports so that piping live and dead loads and stresses from movement will not be transmitted to connected equipment.

O. Pipe Slopes: Install hangers and supports to provide indicated pipe slopes and to not exceed maximum pipe deflections allowed by ASME B31.9 for building services piping.

P. Insulated Piping:

1. Attach clamps and spacers to piping.

    a. Piping Operating above Ambient Air Temperature: Clamp may project through insulation.
    b. Piping Operating below Ambient Air Temperature: Use thermal-hanger shield insert with clamp sized to match OD of insert.
    c. Do not exceed pipe stress limits allowed by ASME B31.9 for building services piping.

2. Install MSS SP-58, Type 39, protection saddles if insulation without vapor barrier is indicated. Fill interior voids with insulation that matches adjoining insulation.

    a. Option: Thermal-hanger shield inserts may be used. Include steel weight-distribution plate for pipe NPS 4 and larger if pipe is installed on rollers.

3. Install MSS SP-58, Type 40, protective shields on cold piping with vapor barrier. Shields shall span an arc of 180 degrees.

    a. Option: Thermal-hanger shield inserts may be used. Include steel weight-distribution plate for pipe NPS 4 and larger if pipe is installed on rollers.

4. Shield Dimensions for Pipe: Not less than the following:

    a. NPS 1/4 to NPS 3-1/2: 12 inches long and 0.048-inch thick.

    b. NPS 4: 12 inches long and 0.06-inch thick.

    c. NPS 5 and NPS 6: 18 inches long and 0.06-inch thick.

    d. NPS 8 to NPS 14: 24 inches long and 0.075-inch thick.

    e. NPS 16 to NPS 24: 24 inches long and 0.105-inch thick.

5. Pipes NPS 8 and Larger: Include wood or reinforced calcium-silicate-insulation inserts of length at least as long as protective shield.
6. Thermal-Hanger Shields: Install with insulation same thickness as piping insulation.

3.2 EQUIPMENT SUPPORTS

A. Fabricate structural-steel stands to suspend equipment from structure overhead or to support equipment above floor.

B. Grouting: Place grout under supports for equipment and make bearing surface smooth.

C. Provide lateral bracing, to prevent swaying, for equipment supports.

3.3 METAL FABRICATIONS

A. Cut, drill, and fit miscellaneous metal fabrications for trapeze pipe hangers and equipment supports.

B. Fit exposed connections together to form hairline joints. Field weld connections that cannot be shop welded because of shipping size limitations.

C. Field Welding: Comply with AWS D1.1 procedures for shielded, metal arc welding; appearance and quality of welds; and methods used in correcting welding work; and with the following:

1. Use materials and methods that minimize distortion and develop strength and corrosion resistance of base metals.
2. Obtain fusion without undercut or overlap.
3. Remove welding flux immediately.
4. Finish welds at exposed connections so no roughness shows after finishing and so contours of welded surfaces match adjacent contours.

3.4 ADJUSTING

A. Hanger Adjustments: Adjust hangers to distribute loads equally on attachments and to achieve indicated slope of pipe.

B. Trim excess length of continuous-thread hanger and support rods to 1-1/2 inches.

3.5 PAINTING

A. Touchup: Clean field welds and abraded areas of shop paint. Paint exposed areas immediately after erecting hangers and supports. Use same materials as used for shop painting. Comply with SSPC-PA 1 requirements for touching up field-painted surfaces.

1. Apply paint by brush or spray to provide a minimum dry film thickness of 2.0 mils.

B. Touchup: Cleaning and touchup painting of field welds, bolted connections, and abraded areas of shop paint on miscellaneous metal are specified in Division 09 Section 09 96 00.

C. Galvanized Surfaces: Clean welds, bolted connections, and abraded areas and apply galvanizing-repair paint to comply with ASTM A780.

3.6 HANGER AND SUPPORT SCHEDULE

A. Specific hanger and support requirements are in sections specifying piping systems and equipment.

B. Comply with MSS SP-69 for pipe-hanger selections and applications that are not specified in piping system sections.

C. Use hangers and supports with galvanized metallic coatings for piping and equipment that will not have field-applied finish.

D. Use nonmetallic coatings on attachments for electrolytic protection where attachments are in direct contact with copper tubing.

E. Use carbon-steel pipe hangers and supports and attachments for general service applications.

F. Use stainless steel pipe hangers and corrosion-resistant attachments for hostile environment applications.

G. Use copper-plated pipe hangers and copper attachments for copper piping and tubing.

H. Use padded hangers for piping that is subject to scratching.

I. Use thermal-hanger shield inserts for insulated piping and tubing.

J. Horizontal-Piping Hangers and Supports: Unless otherwise indicated and except as specified in piping system sections, install the following types:

1. Adjustable, Steel Clevis Hangers (MSS Type 1): For suspension of non-insulated or insulated, stationary pipes NPS 1/2 to NPS 30.
2. Yoke-Type Pipe Clamps (MSS Type 2): For suspension of up to 1050 degrees F, pipes NPS 4 to NPS 24, requiring up to 4 inches of insulation.
3. Carbon- or Alloy-Steel, Double-Bolt Pipe Clamps (MSS Type 3): For suspension of pipes NPS 3/4 to NPS 36, requiring clamp flexibility and up to 4 inches of insulation.
4. Steel Pipe Clamps (MSS Type 4): For suspension of cold and hot pipes NPS 1/2 to NPS 24 if little or no insulation is required.
5. Pipe Hangers (MSS Type 5): For suspension of pipes NPS 1/2 to NPS 4, to allow off-center closure for hanger installation before pipe erection.
6. Adjustable, Swivel Split- or Solid-Ring Hangers (MSS Type 6): For suspension of non-insulated, stationary pipes NPS 3/4 to NPS 8.
7. Adjustable, Steel Band Hangers (MSS Type 7): For suspension of non-insulated, stationary pipes NPS 1/2 to NPS 8.
8. Adjustable Band Hangers (MSS Type 9): For suspension of non-insulated, stationary pipes NPS 1/2 to NPS 8.
9. Adjustable, Swivel-Ring Band Hangers (MSS Type 10): For suspension of non-insulated, stationary pipes NPS 1/2 to NPS 8.
10. Split Pipe Ring with or without Turnbuckle Hangers (MSS Type 11): For suspension of non-insulated, stationary pipes NPS 3/8 to NPS 8.
11. Extension Hinged or Two-Bolt Split Pipe Clamps (MSS Type 12): For suspension of non-insulated, stationary pipes NPS 3/8 to NPS 3.
12. U-Bolts (MSS Type 24): For support of heavy pipes NPS 1/2 to NPS 30.
13. Clips (MSS Type 26): For support of insulated pipes not subject to expansion or contraction.
14. Pipe Saddle Supports (MSS Type 36): For support of pipes NPS 4 to NPS 36, with steel-pipe base stanchion support and cast-iron floor flange or carbon-steel plate.

15. Pipe Stanchion Saddles (MSS Type 37): For support of pipes NPS 4 to NPS 36, with steel-pipe base stanchion support and cast-iron floor flange or carbon-steel plate, and with U-bolt to retain pipe.
16. Adjustable Pipe Saddle Supports (MSS Type 38): For stanchion-type support for pipes NPS 2-1/2 to NPS 36 if vertical adjustment is required, with steel-pipe base stanchion support and cast-iron floor flange.
17. Single-Pipe Rolls (MSS Type 41): For suspension of pipes NPS 1 to NPS 30, from two (2) rods if longitudinal movement caused by expansion and contraction might occur.
18. Adjustable Roller Hangers (MSS Type 43): For suspension of pipes NPS 2-1/2 to NPS 24, from single rod if horizontal movement caused by expansion and contraction might occur.
19. Complete Pipe Rolls (MSS Type 44): For support of pipes NPS 2 to NPS 42 if longitudinal movement caused by expansion and contraction might occur but vertical adjustment is not necessary.
20. Pipe Roll and Plate Units (MSS Type 45): For support of pipes NPS 2 to NPS 24 if small horizontal movement caused by expansion and contraction might occur and vertical adjustment is not necessary.
21. Adjustable Pipe Roll and Base Units (MSS Type 46): For support of pipes NPS 2 to NPS 30 if vertical and lateral adjustment during installation might be required in addition to expansion and contraction.

K. Vertical-Piping Clamps: Unless otherwise indicated and except as specified in piping system sections, install the following types:

1. Extension Pipe or Riser Clamps (MSS Type 8): For support of pipe risers NPS 3/4 to NPS 24.
2. Carbon- or Alloy-Steel Riser Clamps (MSS Type 42): For support of pipe risers NPS 3/4 to NPS 24 if longer ends are required for riser clamps.

L. Hanger-Rod Attachments: Unless otherwise indicated and except as specified in piping system sections, install the following types:

1. Steel Turnbuckles (MSS Type 13): For adjustment up to 6 inches for heavy loads.
2. Steel Clevises (MSS Type 14): For 120 to 450 degrees F piping installations.
3. Swivel Turnbuckles (MSS Type 15): For use with MSS Type 11, split pipe rings.
4. Malleable-Iron Sockets (MSS Type 16): For attaching hanger rods to various types of building attachments.
5. Steel Weldless Eye Nuts (MSS Type 17): For 120 to 450 degrees F piping installations.

M. Building Attachments: Unless otherwise indicated and except as specified in piping system sections, install the following types:

1. Steel or Malleable Concrete Inserts (MSS Type 18): For upper attachment to suspend pipe hangers from concrete ceiling.
2. Top-Beam C-Clamps (MSS Type 19): For use under roof installations with bar-joist construction, to attach to top flange of structural shape.
3. Side-Beam or Channel Clamps (MSS Type 20): For attaching to bottom flange of beams, channels, or angles.
4. Center-Beam Clamps (MSS Type 21): For attaching to center of bottom flange of beams.
5. Welded Beam Attachments (MSS Type 22): For attaching to bottom of beams if loads are considerable and rod sizes are large.
6. C-Clamps (MSS Type 23): For structural shapes.
7. Top-Beam Clamps (MSS Type 25): For top of beams if hanger rod is required tangent to flange edge.
8. Side-Beam Clamps (MSS Type 27): For bottom of steel I-beams.

9. Steel-Beam Clamps with Eye Nuts (MSS Type 28): For attaching to bottom of steel I-beams for heavy loads.
10. Linked-Steel Clamps with Eye Nuts (MSS Type 29): For attaching to bottom of steel I-beams for heavy loads, with link extensions.
11. Malleable-Beam Clamps with Extension Pieces (MSS Type 30): For attaching to structural steel.
12. Welded-Steel Brackets: For support of pipes from below or for suspending from above by using clip and rod. Use one (1) of the following for indicated loads:

    a. Light (MSS Type 31): 750 lb.
    b. Medium (MSS Type 32): 1500 lb.
    c. Heavy (MSS Type 33): 3000 lb.

13. Side-Beam Brackets (MSS Type 34): For sides of steel or wooden beams.
14. Plate Lugs (MSS Type 57): For attaching to steel beams if flexibility at beam is required.
15. Horizontal Travelers (MSS Type 58): For supporting piping systems subject to linear horizontal movement where headroom is limited.

N. Saddles and Shields: Unless otherwise indicated and except as specified in piping system sections, install the following types:

1. Steel-Pipe-Covering Protection Saddles (MSS Type 39): To fill interior voids with insulation that matches adjoining insulation.
2. Protection Shields (MSS Type 40): Of length recommended in writing by manufacturer to prevent crushing insulation.
3. Thermal-Hanger Shield Inserts: For supporting insulated pipe.

O. Spring Hangers and Supports: Unless otherwise indicated and except as specified in piping system sections, install the following types:

1. Restraint-Control Devices (MSS Type 47): Where indicated to control piping movement.
2. Spring Cushions (MSS Type 48): For light loads if vertical movement does not exceed 1-1/4 inches.
3. Spring-Cushion Roll Hangers (MSS Type 49): For equipping Type 41, roll hanger with springs.
4. Spring Sway Braces (MSS Type 50): To retard sway, shock, vibration, or thermal expansion in piping systems.
5. Variable-Spring Hangers (MSS Type 51): Preset to indicated load and limit variability factor to 25 percent to allow expansion and contraction of piping system from hanger.
6. Variable-Spring Base Supports (MSS Type 52): Preset to indicated load and limit variability factor to 25 percent to allow expansion and contraction of piping system from base support.
7. Variable-Spring Trapeze Hangers (MSS Type 53): Preset to indicated load and limit variability factor to 25 percent to allow expansion and contraction of piping system from trapeze support.
8. Constant Supports: For critical piping stress and if necessary to avoid transfer of stress from one (1) support to another support, critical terminal, or connected equipment. Include auxiliary stops for erection, hydrostatic test, and load-adjustment capability. These supports include the following types:

    a. Horizontal (MSS Type 54): Mounted horizontally.
    b. Vertical (MSS Type 55): Mounted vertically.
    c. Trapeze (MSS Type 56): Two (2) vertical-type supports and one (1) trapeze member.

P. Comply with MSS SP-69 for trapeze pipe-hanger selections and applications that are not specified in piping system sections.

Q. Comply with MFMA-103 for metal framing system selections and applications that are not specified in piping system sections.

R. Use powder-actuated fasteners or mechanical-expansion anchors instead of building attachments where required in concrete construction.

S. Use pipe positioning systems in pipe spaces behind plumbing fixtures to support supply and waste piping for plumbing fixtures.

END OF SECTION 22 05 29

SECTION 22 05 48 - VIBRATION & SEISMIC CONTROLS FOR PLUMBING PIPING & EQUIPMENT

PART 1 - GENERAL

1.1 RELATED DOCUMENTS

A. Drawings and general provisions of the Contract, including General and Supplementary Conditions and Division 01 specification sections, apply to this section.

1.2 SECTION INCLUDES

A. Isolation pads.

B. Isolation mounts.

C. Restrained elastomeric isolation mounts.

D. Housed spring mounts.

E. Elastomeric hangers.

F. Spring hangers.

G. Spring hangers with vertical-limit stops.

H. Pipe riser resilient supports.

I. Resilient pipe guides.

J. Seismic snubbers.

K. Restraining braces and cables.

1.3 DEFINITIONS

A. IBC: International Building Code.

B. ICC-ES: ICC-Evaluation Service.

C. OSHPD: Office of Statewide Health Planning and Development for the State of California.

1.4 PERFORMANCE REQUIREMENTS

A. Seismic-Restraint Loading:

1. Site Class as Defined in the IBC: **D**.
2. Assigned Seismic Use Group or Building Category as Defined in the IBC: **II**.
   a. Component Importance Factor: **1.0**.
   b. Component Response Modification Factor: **3.0**

3. Design Spectral Response Acceleration at Short Periods (0.2 Second):
4. Design Spectral Response Acceleration at 1-Second Period:

1.5 SUBMITTALS

A. Submit under provisions of Section 01 33 00.

B. Product Data: For the following:
   1. Include rated load, rated deflection, and overload capacity for each vibration isolation device.
   2. Illustrate and indicate style, material, strength, fastening provision, and finish for each type and size of seismic-restraint component used.
      a. Tabulate types and sizes of seismic restraints, complete with report numbers and rated strength in tension and shear as evaluated by an agency acceptable to authorities having jurisdiction.
      b. Annotate to indicate application of each product submitted and compliance with requirements.
   3. Interlocking Snubbers: Include ratings for horizontal, vertical, and combined loads.

C. Delegated-Design Submittal: For vibration isolation and seismic-restraint details indicated to comply with performance requirements and design criteria, including analysis data signed and sealed by the qualified professional engineer responsible for their preparation.
   1. Design Calculations: Calculate static and dynamic loading due to equipment weight and operation, seismic forces required to select vibration isolators, seismic restraints, and for designing vibration isolation bases.
   2. Riser Supports: Include riser diagrams and calculations showing anticipated expansion and contraction at each support point, initial and final loads on building structure, spring deflection changes, and seismic loads. Include certification that riser system has been examined for excessive stress and that none will exist.
   3. Vibration Isolation Base Details: Detail overall dimensions, including anchorages and attachments to structure and to supported equipment. Include auxiliary motor slides and rails, base weights, equipment static loads, power transmission, component misalignment, and cantilever loads.
   4. Seismic-Restraint Details:
      a. Design Analysis: To support selection and arrangement of seismic restraints. Include calculations of combined tensile and shear loads.
      b. Details: Indicate fabrication and arrangement. Detail attachments of restraints to the restrained items and to the structure. Show attachment locations, methods, and spacings. Identify components, list their strengths, and indicate directions and values of forces transmitted to the structure during seismic events. Indicate association with vibration isolation devices.
      c. Preapproval and Evaluation Documentation: By an agency acceptable to authorities having jurisdiction, showing maximum ratings of restraint items and the basis for approval (tests or calculations).

D. Coordination Drawings: Show coordination of seismic bracing for plumbing piping and equipment with other systems and equipment in the vicinity, including other supports and seismic restraints.

E. Welding certificates.

F. Qualification Data: For professional engineer and testing agency.

G. Field quality-control test reports.

H. Operation and Maintenance Data: For air-mounting systems to include in operation and maintenance manuals.

1.6 QUALITY ASSURANCE

A. Testing Agency Qualifications: An independent agency, with the experience and capability to conduct the testing indicated, that is a nationally recognized testing laboratory (NRTL) as defined by OSHA in 29 CFR 1910.7, and that is acceptable to authorities having jurisdiction.

B. Comply with seismic-restraint requirements in the IBC unless requirements in this section are more stringent.

C. Welding: Qualify procedures and personnel according to AWS D1.1/D1.1M, "Structural Welding Code - Steel."

D. Seismic-restraint devices shall have horizontal and vertical load testing and analysis and shall bear anchorage preapproval OPA number from OSHPD, preapproved by ICC-ES, or preapproved by another agency acceptable to authorities having jurisdiction, showing maximum seismic-restraint ratings. Ratings based on independent testing are preferred to ratings based on calculations. If preapproved ratings are not available, submittals based on independent testing are preferred. Calculations (including combining shear and tensile loads) to support seismic-restraint designs must be signed and sealed by a qualified professional engineer.

PART 2 - PRODUCTS

2.1 VIBRATION ISOLATORS

A. Available Manufacturers: Subject to compliance with requirements, manufacturers offering products that may be incorporated into the Work include, but are not limited to, the following:

B. Manufacturers: Subject to compliance with requirements, provide products by one (1) of the following:

C. Basis-of-Design Product: Subject to compliance with requirements, provide the product indicated on Drawings or a comparable product by one (1) of the following:
1. Ace Mountings Co., Inc.
2. Amber/Booth Company, Inc.
3. Isolation Technology, Inc.
4. Kinetics Noise Control.
5. Mason Industries.
6. Vibration Isolation.
7. Vibration Mountings & Controls, Inc.

D. Pads: Arranged in single or multiple layers of sufficient stiffness for uniform loading over pad area, molded with a nonslip pattern and galvanized-steel baseplates, and factory cut to sizes that match requirements of supported equipment.
1. Resilient Material: Oil- and water-resistant **neoprene**.

E. Mounts: Double-deflection type, with molded, oil-resistant rubber, hermetically sealed compressed fiberglass, or neoprene isolator elements with factory-drilled, encapsulated top plate for bolting to equipment and with baseplate for bolting to structure. Color-code or otherwise identify to indicate capacity range.

1. Materials: Cast-ductile-iron or welded steel housing containing two separate and opposing, oil-resistant rubber or neoprene elements that prevent central threaded element and attachment hardware from contacting the housing during normal operation.
2. Neoprene: Shock-absorbing materials compounded according to the standard for bridge-bearing neoprene as defined by AASHTO.

F. Restrained Mounts: All-directional mountings with seismic restraint.
1. Materials: Cast-ductile-iron or welded steel housing containing two separate and opposing, oil-resistant rubber or neoprene elements that prevent central threaded element and attachment hardware from contacting the housing during normal operation.
2. Neoprene: Shock-absorbing materials compounded according to the standard for bridge-bearing neoprene as defined by AASHTO.

G. Spring Isolators: Freestanding, laterally stable, open-spring isolators.
1. Outside Spring Diameter: Not less than 80 percent of the compressed height of the spring at rated load.
2. Minimum Additional Travel: 50 percent of the required deflection at rated load.
3. Lateral Stiffness: More than 80 percent of rated vertical stiffness.
4. Overload Capacity: Support 200 percent of rated load, fully compressed, without deformation or failure.
5. Baseplates: Factory drilled for bolting to structure and bonded to 1/4-inch- thick, rubber isolator pad attached to baseplate underside. Baseplates shall limit floor load to 500 psig.
6. Top Plate and Adjustment Bolt: Threaded top plate with adjustment bolt and cap screw to fasten and level equipment.

H. Restrained Spring Isolators: Freestanding, steel, open-spring isolators with seismic or limit-stop restraint.
1. Housing: Steel with resilient vertical-limit stops to prevent spring extension due to weight being removed; factory-drilled baseplate bonded to 1/4-inch thick, neoprene or rubber isolator pad attached to baseplate underside; and adjustable equipment mounting and leveling bolt that acts as blocking during installation.
2. Restraint: Seismic or limit-stop as required for equipment and authorities having jurisdiction.
3. Outside Spring Diameter: Not less than 80 percent of the compressed height of the spring at rated load.
4. Minimum Additional Travel: 50 percent of the required deflection at rated load.
5. Lateral Stiffness: More than 80 percent of rated vertical stiffness.
6. Overload Capacity: Support 200 percent of rated load, fully compressed, without deformation or failure.

I. Housed Spring Mounts: Housed spring isolator with integral seismic snubbers.
1. Housing: Ductile-iron or steel housing to provide all-directional seismic restraint.
2. Base: Factory drilled for bolting to structure.
3. Snubbers: Vertically adjustable to allow a maximum of 1/4-inch travel up or down before contacting a resilient collar.

J. Elastomeric Hangers: Single or double-deflection type, fitted with molded, oil-resistant elastomeric isolator elements bonded to steel housings with threaded connections for hanger rods. Color-code or otherwise identify to indicate capacity range.

K. Spring Hangers: Combination coil-spring and elastomeric-insert hanger with spring and insert in compression.
1. Frame: Steel, fabricated for connection to threaded hanger rods and to allow for a maximum of 30 degrees of angular hanger-rod misalignment without binding or reducing isolation efficiency.
2. Outside Spring Diameter: Not less than 80 percent of the compressed height of the spring at rated load.

3. Minimum Additional Travel: 50 percent of the required deflection at rated load.
4. Lateral Stiffness: More than 80 percent of rated vertical stiffness.
5. Overload Capacity: Support 200 percent of rated load, fully compressed, without deformation or failure.
6. Elastomeric Element: Molded, oil-resistant rubber or neoprene. Steel-washer-reinforced cup to support spring and bushing projecting through bottom of frame.
7. Self-centering hanger rod cap to ensure concentricity between hanger rod and support spring coil.

L. Spring Hangers with Vertical-Limit Stop: Combination coil-spring and elastomeric-insert hanger with spring and insert in compression and with a vertical-limit stop.
1. Frame: Steel, fabricated for connection to threaded hanger rods and to allow for a maximum of 30 degrees of angular hanger-rod misalignment without binding or reducing isolation efficiency.
2. Outside Spring Diameter: Not less than 80 percent of the compressed height of the spring at rated load.
3. Minimum Additional Travel: 50 percent of the required deflection at rated load.
4. Lateral Stiffness: More than 80 percent of rated vertical stiffness.
5. Overload Capacity: Support 200 percent of rated load, fully compressed, without deformation or failure.
6. Elastomeric Element: Molded, oil-resistant rubber or neoprene.
7. Adjustable Vertical Stop: Steel washer with neoprene washer "up-stop" on lower threaded rod.
8. Self-centering hanger rod cap to ensure concentricity between hanger rod and support spring coil.

M. Pipe Riser Resilient Support: All-directional, acoustical pipe anchor consisting of two (2) steel tubes separated by a minimum of 1/2-inch thick neoprene. Include steel and neoprene vertical-limit stops arranged to prevent vertical travel in both directions. Design support for a maximum load on the isolation material of 500 psig and for equal resistance in all directions.

N. Resilient Pipe Guides: Telescopic arrangement of two (2) steel tubes or post and sleeve arrangement separated by a minimum of 1/2-inch thick neoprene. Where clearances are not readily visible, a factory-set guide height with a shear pin to allow vertical motion due to pipe expansion and contraction shall be fitted. Shear pin shall be removable and reinsertable to allow for selection of pipe movement. Guides shall be capable of motion to meet location requirements.

2.2 VIBRATION ISOLATION EQUIPMENT BASES

A. Available Manufacturers: Subject to compliance with requirements, manufacturers offering products that may be incorporated into the Work include, but are not limited to, the following:

B. Manufacturers: Subject to compliance with requirements, provide products by one (1) of the following:

C. Basis-of-Design Product: Subject to compliance with requirements, provide the product indicated on Drawings or a comparable product by one (1) of the following:
1. Ace Mountings Co., Inc.
2. Amber/Booth Company, Inc.
3. Isolation Technology, Inc.
4. Kinetics Noise Control.
5. Mason Industries.
6. Vibration Isolation.
7. Vibration Mountings & Controls, Inc.

D. Steel Base: Factory-fabricated, welded, structural-steel bases and rails.
   1. Design Requirements: Lowest possible mounting height with not less than 1-inch clearance above the floor. Include equipment anchor bolts and auxiliary motor slide bases or rails.
      a. Include supports for suction and discharge elbows for pumps.
   2. Structural Steel: Steel shapes, plates, and bars complying with ASTM A36. Bases shall have shape to accommodate supported equipment.
   3. Support Brackets: Factory-welded steel brackets on frame for outrigger isolation mountings and to provide for anchor bolts and equipment support.

E. Inertia Base: Factory-fabricated, welded, structural-steel bases and rails ready for placement of cast-in-place concrete.
   1. Design Requirements: Lowest possible mounting height with not less than 1-inch clearance above the floor. Include equipment anchor bolts and auxiliary motor slide bases or rails.
      a. Include supports for suction and discharge elbows for pumps.
   2. Structural Steel: Steel shapes, plates, and bars complying with ASTM A36. Bases shall have shape to accommodate supported equipment.
   3. Support Brackets: Factory-welded steel brackets on frame for outrigger isolation mountings and to provide for anchor bolts and equipment support.
   4. Fabrication: Fabricate steel templates to hold equipment anchor-bolt sleeves and anchors in place during placement of concrete. Obtain anchor-bolt templates from supported equipment manufacturer.

2.3 SEISMIC-RESTRAINT DEVICES

A. Available Manufacturers: Subject to compliance with requirements, manufacturers offering products that may be incorporated into the Work include, but are not limited to, the following:

B. Manufacturers: Subject to compliance with requirements, provide products by one (1) of the following:

C. Basis-of-Design Product: Subject to compliance with requirements, provide [the product indicated on Drawings or a comparable product by one (1) of the following:
   1. Ace Mountings Co., Inc.
   2. Amber/Booth Company, Inc.
   3. Isolation Technology, Inc.
   4. Kinetics Noise Control.
   5. Mason Industries.
   6. Vibration Isolation.
   7. Vibration Mountings & Controls, Inc.

D. General Requirements for Restraint Components: Rated strengths, features, and applications shall be as defined in reports by an agency acceptable to authorities having jurisdiction.
   1. Structural Safety Factor: Allowable strength in tension, shear, and pullout force of components shall be at least four (4) times the maximum seismic forces to which they will be subjected.

E. Snubbers: Factory fabricated using welded structural-steel shapes and plates, anchor bolts, and replaceable resilient isolation washers and bushings.
   1. Anchor bolts for attaching to concrete shall be seismic-rated, drill-in, and stud-wedge or female-wedge type.
   2. Resilient Isolation Washers and Bushings: Oil- and water-resistant neoprene.
   3. Maximum 1/4-inch air gap, and minimum 1/4-inch thick resilient cushion.

F. Channel Support System: MFMA-3, shop- or field-fabricated support assembly made of slotted steel channels with accessories for attachment to braced component at one end and to building structure at the other end and other matching components and with corrosion-resistant coating; and rated in tension, compression, and torsion forces.

G. Restraint Cables: ASTM A492 stainless steel cables with end connections made of steel assemblies with thimbles, brackets, swivel, and bolts designed for restraining cable service; and with a minimum of two clamping bolts for cable engagement.

H. Hanger Rod Stiffener: Reinforcing steel angle clamped to hanger rod.

I. Bushings for Floor-Mounted Equipment Anchor Bolts: Neoprene bushings designed for rigid equipment mountings and matched to type and size of anchor bolts and studs.

J. Bushing Assemblies for Wall-Mounted Equipment Anchorage: Assemblies of neoprene elements and steel sleeves designed for rigid equipment mountings, and matched to type and size of attachment devices used.

K. Resilient Isolation Washers and Bushings: One-piece, molded, oil- and water-resistant neoprene, with a flat washer face.

L. Mechanical Anchor Bolts: Drilled-in and stud-wedge or female-wedge type in zinc-coated steel for interior applications and stainless steel for exterior applications. Select anchor bolts with strength required for anchor and as tested according to ASTM E488. Minimum length of eight times diameter.

M. Adhesive Anchor Bolts: Drilled-in and capsule anchor system containing polyvinyl or urethane methacrylate-based resin and accelerator, or injected polymer or hybrid mortar adhesive. Provide anchor bolts and hardware with zinc-coated steel for interior applications and stainless steel for exterior applications. Select anchor bolts with strength required for anchor and as tested according to ASTM E488.

2.4 FACTORY FINISHES

A. Finish: Manufacturer's standard prime-coat finish ready for field painting.

B. Finish: Manufacturer's standard paint applied to factory-assembled and -tested equipment before shipping.
   1. Powder coating on springs and housings.
   2. All hardware shall be galvanized. Hot-dip galvanize metal components for exterior use.
   3. Baked enamel or powder coat for metal components on isolators for interior use.
   4. Color-code or otherwise mark vibration isolation and seismic-control devices to indicate capacity range.

PART 3 - EXECUTION

3.1 EXAMINATION

A. Examine areas and equipment to receive vibration isolation and seismic-control devices for compliance with requirements for installation tolerances and other conditions affecting performance.

B. Examine roughing-in of reinforcement and cast-in-place anchors to verify actual locations before installation.

C. Proceed with installation only after unsatisfactory conditions have been corrected.

3.2 APPLICATIONS

A. Multiple Pipe Supports: Secure pipes to trapeze member with clamps approved for application by an agency acceptable to authorities having jurisdiction.

B. Hanger Rod Stiffeners: Install hanger rod stiffeners where indicated or scheduled on Drawings to receive them and where required to prevent buckling of hanger rods due to seismic forces.

C. Strength of Support and Seismic-Restraint Assemblies: Where not indicated, select sizes of components so strength will be adequate to carry present and future static and seismic loads within specified loading limits.

3.3 VIBRATION-CONTROL AND SEISMIC-RESTRAINT DEVICE INSTALLATION

A. Equipment Restraints:
1. Install seismic snubbers on plumbing equipment mounted on vibration isolators. Locate snubbers as close as possible to vibration isolators and bolt to equipment base and supporting structure.
2. Install resilient bolt isolation washers on equipment anchor bolts where clearance between anchor and adjacent surface exceeds 0.125 inches.
3. Install seismic-restraint devices using methods approved by an agency acceptable to authorities having jurisdiction providing required submittals for component.

B. Piping Restraints:
1. Comply with requirements in MSS SP-127.
2. Space lateral supports a maximum of **40 feet** o.c., and longitudinal supports a maximum of **80 feet** o.c.
3. Brace a change of direction longer than 12 feet.

C. Install cables so they do not bend across edges of adjacent equipment or building structure.

D. Install seismic-restraint devices using methods approved by an agency acceptable to authorities having jurisdiction providing required submittals for component.

E. Install assemblies for anchor bolts for floor-mounted equipment, arranged to provide resilient media between anchor bolt and mounting hole in concrete base.

F. Install bushing assemblies for mounting bolts for wall-mounted equipment, arranged to provide resilient media where equipment or equipment-mounting channels are attached to wall.

G. Attachment to Structure: If specific attachment is not indicated, anchor bracing to structure at flanges of beams, at upper truss chords of bar joists, or at concrete members.

H. Drilled-in Anchors:
1. Identify position of reinforcing steel and other embedded items prior to drilling holes for anchors. Do not damage existing reinforcing or embedded items during coring or drilling. Notify the structural engineer if reinforcing steel or other embedded items are encountered

during drilling. Locate and avoid prestressed tendons, electrical and telecommunications conduit, and gas lines.
2. Do not drill holes in concrete or masonry until concrete, mortar, or grout has achieved full design strength.
3. Wedge Anchors: Protect threads from damage during anchor installation. Heavy-duty sleeve anchors shall be installed with sleeve fully engaged in the structural element to which anchor is to be fastened.
4. Adhesive Anchors: Clean holes to remove loose material and drilling dust prior to installation of adhesive. Place adhesive in holes proceeding from the bottom of the hole and progressing toward the surface in such a manner as to avoid introduction of air pockets in the adhesive.
5. Set anchors to manufacturer's recommended torque, using a torque wrench.
6. Install zinc-coated steel anchors for interior and stainless-steel anchors for exterior applications.

3.4 ACCOMMODATION OF DIFFERENTIAL SEISMIC MOTION

A. Install flexible connections in piping where they cross seismic joints, where adjacent sections or branches are supported by different structural elements, and where the connections terminate with connection to equipment that is anchored to a different structural element from the one supporting the connections as they approach equipment. Comply with requirements in Section 22 11 16 for piping flexible connections.

3.5 FIELD QUALITY CONTROL

A. Testing Agency: **Engage** a qualified testing agency to perform tests and inspections.

B. Perform tests and inspections.

C. Tests and Inspections:
1. Provide evidence of recent calibration of test equipment by a testing agency acceptable to authorities having jurisdiction.
2. Schedule test with Owner, through Architect, before connecting anchorage device to restrained component (unless post-connection testing has been approved), and with at least seven days' advance notice.
3. Obtain Architect's approval before transmitting test loads to structure. Provide temporary load-spreading members.
4. Test at least **four (4)** of each type and size of installed anchors and fasteners selected by Architect.
5. Test to 90 percent of rated proof load of device.
6. Measure isolator restraint clearance.
7. Measure isolator deflection.
8. Verify snubber minimum clearances.
9. Air-Mounting System Leak Test: After installation, charge system and test for leaks. Repair leaks and retest until no leaks exist.
10. Air-Mounting System Operational Test: Test the compressed-air leveling system.
11. Test and adjust air-mounting system controls and safeties.
12. If a device fails test, modify all installations of same type and retest until satisfactory results are achieved.

D. Remove and replace malfunctioning units and retest as specified above.

E. Prepare test and inspection reports.

3.6 ADJUSTING

A. Adjust isolators after piping system is at operating weight.

B. Adjust limit stops on restrained spring isolators to mount equipment at normal operating height. After equipment installation is complete, adjust limit stops so they are out of contact during normal operation.

C. Adjust active height of sprint isolators.

D. Adjust restraints to permit free movement of equipment within normal mode of operation.

3.7 PLUMBING VIBRATION-CONTROL AND SEISMIC-RESTRAINT DEVICE SCHEDULE

A. Supported or Suspended Equipment: Contractor shall supply a schedule listing all devices along with the following information:
   1. Equipment Location:
   2. Pads:
      a. Material:
      b. Thickness:
      c. Number of Pads:
   3. Isolator Type:
   4. Base Type:
   5. Minimum Deflection:
   6. Component Importance Factor:
   7. Component Response Modification Factor:
   8. Component Amplification Factor:

END OF SECTION 22 05 48

SECTION 22 05 53 - IDENTIFICATION FOR PLUMBING PIPING AND EQUIPMENT

PART 1 - GENERAL

1.1 RELATED DOCUMENTS

A. Drawings and general provisions of the Contract, including General and Supplementary Conditions and Division 01 specification sections, apply to this section.

1.2 SECTION INCLUDES

A. Equipment labels.

B. Warning signs and labels.

C. Pipe labels.

D. Stencils.

E. Valve tags.

F. Warning tags.

1.3 SUBMITTALS

A. Submit under provisions of Section 01 33 00.

B. Product Data: For each type of product indicated.

C. Samples: For color, letter style, and graphic representation required for each identification material and device.

D. Equipment Label Schedule: Include a listing of all equipment to be labeled with the proposed content for each label.

E. Valve numbering scheme.

F. Valve Schedules: For each piping system to include in maintenance manuals.

1.4 COORDINATION

A. Coordinate installation of identifying devices with completion of covering and painting of surfaces where devices are to be applied.

B. Coordinate installation of identifying devices with locations of access panels and doors.

C. Install identifying devices before installing acoustical ceilings and similar concealment.

PART 2 - PRODUCTS

2.1 EQUIPMENT LABELS

A. Metal Labels for Equipment:
   1. Material and Thickness: Brass, 0.032-inch minimum thickness, and having predrilled or stamped holes for attachment hardware.
   2. Minimum Label Size: Length and width vary for required label content, but not less than 2-1/2 by 3/4 inch.
   3. Minimum Letter Size: 1/4 inch for name of units if viewing distance is less than 24 inches, 1/2 inch for viewing distances up to 72 inches, and proportionately larger lettering for greater viewing distances. Include secondary lettering two-thirds to three-fourths the size of principal lettering.
   4. Fasteners: Stainless steel rivets.
   5. Adhesive: Contact-type permanent adhesive, compatible with label and with substrate.

B. Plastic Labels for Equipment:
   1. Material and Thickness: Multilayer, multicolor, plastic labels for mechanical engraving, 1/16 inch thick, and having predrilled holes for attachment hardware.
   2. Letter Color: White.
   3. Background Color: Blue.
   4. Maximum Temperature: Able to withstand temperatures up to 160 degrees F.
   5. Minimum Label Size: Length and width vary for required label content, but not less than 2-1/2 by 3/4 inch.
   6. Minimum Letter Size: 1/4 inch for name of units if viewing distance is less than 24 inches, 1/2 inch for viewing distances up to 72 inches, and proportionately larger lettering for greater viewing distances. Include secondary lettering two-thirds to three-fourths the size of principal lettering.
   7. Fasteners: Stainless steel rivets.
   8. Adhesive: Contact-type permanent adhesive, compatible with label and with substrate.

C. Label Content: Include equipment's Drawing designation or unique equipment number, drawing numbers where equipment is indicated (plans, details, and schedules), plus the specification section number and title where equipment is specified.

D. Equipment Label Schedule: For each item of equipment to be labeled, on 8-1/2-by-11-inch bond paper. Tabulate equipment identification number and identify Drawing numbers where equipment is indicated (plans, details, and schedules), plus the specification section number and title where equipment is specified. Equipment schedule shall be included in operation and maintenance data.

2.2 WARNING SIGNS AND LABELS

A. Material and Thickness: Multilayer, multicolor, plastic labels for mechanical engraving, 1/16 inch thick, and having predrilled holes for attachment hardware.

B. Letter Color: White

C. Background Color: Red.

D. Maximum Temperature: Able to withstand temperatures up to 160 degrees F.

E. Minimum Label Size: Length and width vary for required label content, but not less than 2-1/2 by 3/4 inch.

F. Minimum Letter Size: 1/4 inch for name of units if viewing distance is less than 24 inches, 1/2 inch for viewing distances up to 72 inches, and proportionately larger lettering for greater viewing distances. Include secondary lettering two-thirds to three-fourths the size of principal lettering.

G. Fasteners: Stainless-steel rivets.

H. Adhesive: Contact-type permanent adhesive, compatible with label and with substrate.

I. Label Content: Include caution and warning information, plus emergency notification instructions.

2.3 PIPE LABELS

A. General Requirements for Manufactured Pipe Labels: Preprinted, color-coded, with lettering indicating service, and showing flow direction.

B. Pretensioned Pipe Labels: Precoiled, semirigid plastic formed to cover full circumference of pipe and to attach to pipe without fasteners or adhesive.

C. Self-Adhesive Pipe Labels: Printed plastic with contact-type, permanent-adhesive backing.

D. Pipe Label Contents: Include identification of piping service using same designations or abbreviations as used on Drawings, pipe size, and an arrow indicating flow direction.
   1. Flow-Direction Arrows: Integral with piping system service lettering to accommodate both directions, or as separate unit on each pipe label to indicate flow direction.
   2. Lettering Size: At least 1-1/2 inches high.

2.4 STENCILS

A. Stencils: Prepared with letter sizes according to ASME A13.1 for piping; and minimum letter height of 3/4 inch for access panel and door labels, equipment labels, and similar operational instructions.
   1. Stencil Material: Aluminum.
   2. Stencil Paint: Exterior, gloss, acrylic enamel black unless otherwise indicated. Paint may be in pressurized spray-can form.
   3. Identification Paint: Exterior, acrylic enamel in colors according to ASME A13.1 unless otherwise indicated.

2.5 VALVE TAGS

A. Valve Tags: Stamped or engraved with 1/4-inch letters for piping system abbreviation and 1/2-inch numbers.
   1. Tag Material: Brass, 0.032-inch minimum thickness, and having predrilled or stamped holes for attachment hardware.
   2. Fasteners: Brass wire-link or beaded chain; or S-hook.

B. Valve Schedules: For each piping system, on 8-1/2-by-11-inch bond paper. Tabulate valve number, piping system, system abbreviation (as shown on valve tag), location of valve (room or

space), normal-operating position (open, closed, or modulating), and variations for identification. Mark valves for emergency shutoff and similar special uses.
1. Valve-tag schedule shall be included in operation and maintenance data.

2.6 WARNING TAGS

A. Warning Tags: Preprinted or partially preprinted, accident-prevention tags, of plasticized card stock with matte finish suitable for writing.
1. Size: Approximately 4 by 7 inches.
2. Fasteners: Reinforced grommet and wire or string.
3. Nomenclature: Large-size primary caption such as "DANGER," "CAUTION," or "DO NOT OPERATE."
4. Color: Yellow background with black lettering.

PART 3 - EXECUTION

3.1 PREPARATION

A. Clean piping and equipment surfaces of substances that could impair bond of identification devices, including dirt, oil, grease, release agents, and incompatible primers, paints, and encapsulants.

3.2 EQUIPMENT LABEL INSTALLATION

A. Install or permanently fasten labels on each major item of mechanical equipment.

B. Locate equipment labels where accessible and visible.

3.3 PIPE LABEL INSTALLATION

A. Piping Color-Coding: Painting of piping is specified in Section 09 91 00.

B. Locate pipe labels where piping is exposed or above accessible ceilings in finished spaces; machine rooms; accessible maintenance spaces such as shafts, tunnels, and plenums; and exterior exposed locations as follows:
1. Near each valve and control device.
2. Near each branch connection, excluding short takeoffs for fixtures and terminal units. Where flow pattern is not obvious, mark each pipe at branch.
3. Near penetrations through walls, floors, ceilings, and inaccessible enclosures.
4. At access doors, manholes, and similar access points that permit view of concealed piping.
5. Near major equipment items and other points of origination and termination.
6. Spaced at maximum intervals of 50 feet along each run. Reduce intervals to 25 feet in areas of congested piping and equipment.
7. On piping above removable acoustical ceilings. Omit intermediately spaced labels.

C. Pipe Label Color Schedule:
1. Low-Pressure, Compressed-Air Piping:
   a. Background Color: Blue.
   b. Letter Color: White.

2. Domestic Water Piping:
   a. Background Color: Blue.
   b. Letter Color: Yellow.
3. Sanitary, Waste, Vent and Storm Drainage Piping:
   a. Background Color: Red.
   b. Letter Color: White.
   c.
4. Gas Piping:
   a. Background Color: Green.
   b. Letter Color: White

3.4 VALVE-TAG INSTALLATION

A. Install tags on valves and control devices in piping systems, except check valves; valves within factory-fabricated equipment units; shutoff valves; faucets; convenience and lawn-watering hose connections; and similar roughing-in connections of end-use fixtures and units. List tagged valves in a valve schedule.

B. Valve-Tag Application Schedule: Tag valves according to size, shape, and color scheme and with captions similar to those indicated in the following subparagraphs:
   1. Valve-Tag Size and Shape:
      a. Cold Water: 1-1/2 inches
      b. Hot Water: 1-1/2 inches
      c. Compressed Air: 1-1/2 inches
   2. Valve-Tag Color:
      a. Cold Water: Natural
      b. Hot Water: Natural.
      c. Low-Pressure Compressed Air: Natural.
   3. Letter Color:
      a. Cold Water: Black.
      b. Hot Water: Black.
      c. Low-Pressure Compressed Air: Black.

3.5 WARNING-TAG INSTALLATION

A. Write required message on, and attach warning tags to, equipment and other items where required.

END OF SECTION 22 05 53

SECTION 22 07 16 - PLUMBING EQUIPMENT INSULATION

PART 1 - GENERAL

1.1 RELATED DOCUMENTS

A. Drawings and general provisions of the Contract, including General and Supplementary Conditions and Division 01 specification sections, apply to this section.

1.2 SECTION INCLUDES

A. Insulating the following plumbing equipment:

B.
1. Domestic water heat exchangers.
2. Domestic water converters.
3. Domestic water pumps.
4. Domestic water storage tanks.
5. Domestic water filter housings.

1.3 RELATED SECTIONS

A. Section 22 07 19 - Plumbing Piping Insulation.

1.4 SUBMITTALS

A. Submit under provisions of Section 01 33 00.

B. Product Data: For each type of product indicated. Include thermal conductivity, water-vapor permeance thickness, and jackets (both factory and field applied, if any).

C. Shop Drawings: Include plans, elevations, sections, details, and attachments to other work.
1. Detail application of protective shields, saddles, and inserts at hangers for each type of insulation and hanger.
2. Detail attachment and covering of heat tracing inside insulation.
3. Detail removable insulation at equipment connections and access panels.
4. Detail application of field-applied jackets.
5. Detail application at linkages of control devices.
6. Detail field application for each equipment type.

D. Samples: For each type of insulation and jacket indicated. Identify each sample, describing product and intended use. Sample sizes are as follows:
1. Sheet Form Insulation Materials: 12 inches square.
2. Sheet Jacket Materials: 12 inches square.
3. Manufacturer's Color Charts: For products where color is specified, show the full range of colors available for each type of finish material.

E. Qualification Data: For qualified installer.

F. Material Test Reports: From a qualified testing agency acceptable to authorities having jurisdiction indicating, interpreting, and certifying test results for compliance of insulation materials, sealers, attachments, cements, and jackets, with requirements indicated. Include dates of tests and test methods employed.

G. Field quality-control reports.

1.5 QUALITY ASSURANCE

A. Installer Qualifications: Skilled mechanics who have successfully completed an apprenticeship program or another craft training program certified by the Department of Labor, Bureau of Apprenticeship and Training.

B. Surface-Burning Characteristics: For insulation and related materials, as determined by testing identical products according to ASTM E84 by a testing agency acceptable to authorities having jurisdiction. Factory label insulation and jacket materials and adhesive, mastic, tapes, and cement material containers, with appropriate markings of applicable testing agency.
   1. Insulation Installed Indoors: Flame-spread index of 25 or less, and smoke-developed index of 50 or less.
   2. Insulation Installed Outdoors: Flame-spread index of 75 or less, and smoke-developed index of 150 or less.

C. Mockups: Before installing insulation, build mockups for each type of insulation and finish listed below to demonstrate quality of insulation application and finishes. Build mockups in the location indicated or, if not indicated, as directed by Architect. Use materials indicated for the completed Work.
   1. Equipment Mockups: One (1) tank or vessel.
   2. For each mockup, fabricate cutaway sections to allow observation of application details for insulation materials, adhesives, mastics, attachments, and jackets.
   3. Notify Architect seven days in advance of dates and times when mockups will be constructed.
   4. Obtain Architect's approval of mockups before starting insulation application.
   5. Approval of mockups does not constitute approval of deviations from the Contract Documents contained in mockups unless Architect specifically approves such deviations in writing.
   6. Maintain mockups during construction in an undisturbed condition as a standard for judging the completed Work.
   7. Demolish and remove mockups when directed.

1.6 DELIVERY, STORAGE AND HANDLING

A. Packaging: Insulation material containers shall be marked by manufacturer with appropriate ASTM standard designation, type and grade, and maximum use temperature.

1.7 COORDINATION

A. Coordinate sizes and locations of supports, hangers, and insulation shields specified in Section 22 05 29.

B. Coordinate clearance requirements with equipment installer for equipment insulation application.

C. Coordinate installation and testing of heat tracing.

1.8 SCHEDULING

A. Schedule insulation application after pressure testing systems and, where required, after installing and testing heat tracing. Insulation application may begin on segments that have satisfactory test results.

B. Complete installation and concealment of plastic materials as rapidly as possible in each area of construction.

PART 2 - PRODUCTS

2.1 INSULATION MATERIALS

A. Comply with requirements in "Domestic Water Boiler Breeching Insulation Schedule" and "Equipment Insulation Schedule" articles for where insulating materials shall be applied.

B. Products shall not contain asbestos, lead, mercury, or mercury compounds.

C. Products that encounter stainless steel shall have a leachable chloride content of less than 50 ppm when tested according to ASTM C871.

D. Insulation materials for use on austenitic stainless steel shall be qualified as acceptable according to ASTM C795.

E. Foam insulation materials shall not use CFC or HCFC blowing agents in the manufacturing process.

F. Calcium Silicate:
1. Products: Subject to compliance with requirements, provide one (1) of the following available products that may be incorporated into the work include, but are not limited to, the following:
   a. Industrial Insulation Group (IIG); Thermo-12 Gold.
   b. Johns Manville
   c. ALB Materials, Inc.
2. Flat-, curved-, and grooved-block sections of noncombustible, inorganic, hydrous calcium silicate with a non-asbestos fibrous reinforcement. Comply with ASTM C533, Type I.

G. Cellular Glass: Inorganic, incombustible, foamed or cellulated glass with annealed, rigid, hermetically sealed cells. Factory-applied jacket requirements are specified in "Factory-Applied Jackets" article.
1. Products: Subject to compliance with requirements, provide one (1) of the following available products that may be incorporated into the Work include, but are not limited to, the following:
   a. Pittsburgh Corning Corporation; Foamglas.
   b. Owens Corning
   c. Poraver North America.
2. Block Insulation: ASTM C552, Type I.
3. Special-Shaped Insulation: ASTM C552, Type III.
4. Board Insulation: ASTM C552, Type IV.
5. Preformed Pipe Insulation without Jacket: Comply with ASTM C552, Type II, Class 1.

6. Preformed Pipe Insulation with Factory-Applied ASJ-SSL: Comply with ASTM C552, Type II, Class 2.
7. Factory fabricate shapes according to ASTM C450 and ASTM C585.

H. Flexible Elastomeric Insulation: Closed-cell, sponge- or expanded-rubber materials. Comply with ASTM C534, Type I for tubular materials and Type II for sheet materials.
1. Products: Subject to compliance with requirements, provide one (1) of the following available products that may be incorporated into the Work include, but are not limited to, the following:
a. Aeroflex USA, Inc.; Aerocel.
b. Armacell LLC; AP Armaflex.
c. K-Flex USA; Insul-Sheet and K-FLEX LS.

I. Mineral-Fiber Blanket Insulation: Mineral or glass fibers bonded with a thermosetting resin. Comply with ASTM C553, Type II and ASTM C1290, Type I. Factory-applied jacket requirements are specified in "Factory-Applied Jackets" article.
1. Products: Subject to compliance with requirements, provide one (1) of the following available products that may be incorporated into the Work include, but are not limited to, the following:
a. CertainTeed Corp.; SoftTouch Duct Wrap.
b. Johns Manville; Microlite.
c. Knauf Insulation; Friendly Feel Duct Wrap.
d. Owens Corning; SOFTR All-Service Duct Wrap.
e.

J. High-Temperature, Mineral-Fiber Blanket Insulation: Mineral or glass fibers bonded with a thermosetting resin. Comply with ASTM C553, Type V, without factory-applied jacket.
1. Products: Subject to compliance with requirements, provide one (1) of the following available products that may be incorporated into the Work include, but are not limited to, the following:
a. Industrial Insulation Group (IIG); MinWool-1200 Flexible Batt.
b. Johns Manville; HTB 26 Spin-Glas.
c. Roxul Inc.; Roxul RW.
d.

K. Mineral-Fiber Board Insulation: Mineral or glass fibers bonded with a thermosetting resin. Comply with ASTM C612, Type IA or Type IB. For equipment applications, provide insulation [without factory-applied jacket] [with factory-applied ASJ] [with factory-applied FSK jacket]. Factory-applied jacket requirements are specified in "Factory-Applied Jackets" article.
1. Products: Subject to compliance with requirements, [provide the following] [provide one (1) of the following] [available products that may be incorporated into the Work include, but are not limited to, the following]:
a. CertainTeed Corp.; CertaPro Commercial Board.
b. Fibrex Insulations Inc.; FBX.
c. Johns Manville; 800 Series Spin-Glas.
d. Knauf Insulation; Insulation Board.
e. Manson Insulation Inc.; AK Board.
f. Owens Corning; Fiberglas 700 Series.
g. [Insert manufacturer's name; product name or designation].

L. High-Temperature, Mineral-Fiber Board Insulation: Mineral or glass fibers bonded with a thermosetting resin. Comply with ASTM C612, Type III, without factory-applied jacket.
1. Products: Subject to compliance with requirements, [provide the following] [provide one (1) of the following] [available products that may be incorporated into the Work include, but are not limited to, the following]:
a. Fibrex Insulations Inc.; FBX.

b. Industrial Insulation Group (IIG); MinWool-1200 Industrial Board.
c. Rock Wool; Delta Board.
d. Roxul Inc.; RHT and RockBoard.
e. Thermafiber, Inc.; Thermafiber Industrial Felt.
f. [Insert manufacturer's name; product name or designation].

M. Mineral-Fiber, Preformed Pipe Insulation:
1. Products: Subject to compliance with requirements, [provide the following] [provide one (1) of the following] [available products that may be incorporated into the Work include, but are not limited to, the following]:
a. Fibrex Insulations Inc.; Coreplus 1200.
b. Johns Manville; Micro-Lok.
c. Knauf Insulation; 1000-Degree Pipe Insulation.
d. Manson Insulation Inc.; Alley-K.
e. Owens Corning; Fiberglas Pipe Insulation.
f. [Insert manufacturer's name; product name or designation].
2. Type I, 850 Degrees F Materials: Mineral or glass fibers bonded with a thermosetting resin. Comply with ASTM C547, Type I, Grade A, [without factory-applied jacket] [with factory-applied ASJ] [with factory-applied ASJ-SSL]. Factory-applied jacket requirements are specified in "Factory-Applied Jackets" article.

N. Mineral-Fiber, Pipe and Tank Insulation: Mineral or glass fibers bonded with a thermosetting resin. Semi-rigid board material with factory-applied [ASJ] [FSK jacket] complying with ASTM C1393, Type II or Type IIIA Category 2, or with properties similar to ASTM C612, Type IB. Nominal density is 2.5 lb/cu ft or more. Thermal conductivity (k-value) at 100 degrees F is 0.29 Btu x in/h x sq ft x degrees F or less. Factory-applied jacket requirements are specified in "Factory-Applied Jackets" article.
1. Products: Subject to compliance with requirements, [provide the following] [provide one (1) of the following] [available products that may be incorporated into the Work include, but are not limited to, the following]:
a. CertainTeed Corp.; CrimpWrap.
b. Johns Manville; MicroFlex.
c. Knauf Insulation; Pipe and Tank Insulation.
d. Manson Insulation Inc.; AK Flex.
e. Owens Corning; Fiberglas Pipe and Tank Insulation.
f. [Insert manufacturer's name; product name or designation].

O. Polyolefin: Unicellular, polyethylene thermal plastic insulation. Comply with ASTM C534 or ASTM C1427, Type I, Grade 1 for tubular materials and Type II, Grade 1 for sheet materials.
1. Products: Subject to compliance with requirements, [provide the following] [provide one (1) of the following] [available products that may be incorporated into the Work include, but are not limited to, the following]:
a. Armacell LLC; Tubolit.
b. Nomaco Insulation; IMCOLOCK, IMCOSHEET, NOMALOCK, and NOMAPLY.
c. [Insert manufacturer's name; product name or designation].

2.2 INSULATING CEMENTS

A. Mineral-Fiber Insulating Cement: Comply with ASTM C195.
1. Products: Subject to compliance with requirements, [provide the following] [provide one (1) of the following] [available products that may be incorporated into the Work include, but are not limited to, the following]:
a. Ramco Insulation, Inc.; Super-Stik.
b. [Insert manufacturer's name; product name or designation].

B. Expanded or Exfoliated Vermiculite Insulating Cement: Comply with ASTM C196.
   1. Products: Subject to compliance with requirements, [provide the following] [provide one (1) of the following] [available products that may be incorporated into the Work include, but are not limited to, the following]:
      a. Ramco Insulation, Inc.; Thermokote V.
      b. [Insert manufacturer's name; product name or designation].

C. Mineral-Fiber, Hydraulic-Setting Insulating and Finishing Cement: Comply with ASTM C449.
   1. Products: Subject to compliance with requirements, [provide the following] [provide one (1) of the following] [available products that may be incorporated into the Work include, but are not limited to, the following]:
      a. Ramco Insulation, Inc.; Ramcote 1200 and Quik-Cote.
      b. [Insert manufacturer's name; product name or designation].

2.3 ADHESIVES

A. Materials shall be compatible with insulation materials, jackets, and substrates and for bonding insulation to itself and to surfaces to be insulated unless otherwise indicated.

B. Calcium Silicate Adhesive: Fibrous, sodium-silicate-based adhesive with a service temperature range of 50 to 800 degrees F.
   1. Products: Subject to compliance with requirements, [provide the following] [provide one (1) of the following] [available products that may be incorporated into the Work include, but are not limited to, the following]:
      a. Childers Brand, Specialty Construction Brands, Inc., a business of H. B. Fuller Company; CP-97.
      b. Eagle Bridges - Marathon Industries; 290.
      c. Foster Brand, Specialty Construction Brands, Inc., a business of H. B. Fuller Company; 81-27.
      d. Mon-Eco Industries, Inc.; 22-30.
      e. Vimasco Corporation; 760.
      f. [Insert manufacturer's name; product name or designation].
   2. For indoor applications, use adhesive that has a VOC content of 80 g/L or less when calculated according to 40 CFR 59, Subpart D (EPA Method 24).
   3. Use adhesive that complies with the testing and product requirements of the California Department of Health Services' "Standard Practice for the Testing of Volatile Organic Emissions from Various Sources Using Small-Scale Environmental Chambers," including 2004 Addenda.

C. Cellular-Glass Adhesive: Two-component, thermosetting urethane adhesive containing no flammable solvents, with a service temperature range of minus 100 to plus 200 degrees F.
   1. Products: Subject to compliance with requirements, [provide the following] [provide one (1) of the following] [available products that may be incorporated into the Work include, but are not limited to, the following]:
      a. Foster Brand, Specialty Construction Brands, Inc., a business of H. B. Fuller Company; 81-84.
      b. [Insert manufacturer's name; product name or designation].
   2. For indoor applications, use adhesive that has a VOC content of 50 g/L or less when calculated according to 40 CFR 59, Subpart D (EPA Method 24).
   3. Use adhesive that complies with the testing and product requirements of the California Department of Health Services' "Standard Practice for the Testing of Volatile Organic Emissions from Various Sources Using Small-Scale Environmental Chambers," including 2004 Addenda.

D. Flexible Elastomeric and Polyolefin Adhesive: Comply with MILA-24179A, Type II, Class I.

1. Products: Subject to compliance with requirements, [provide the following] [provide one (1) of the following] [available products that may be incorporated into the Work include, but are not limited to, the following]:
   a. Aeroflex USA, Inc.; Aeroseal.
   b. Armacell LLC; Armaflex 520 Adhesive.
   c. Foster Brand, Specialty Construction Brands, Inc., a business of H. B. Fuller Company; 85-75.
   d. K-Flex USA; R-373 Contact Adhesive.
   e. [Insert manufacturer's name; product name or designation].
2. For indoor applications, use adhesive that has a VOC content of 50 g/L or less when calculated according to 40 CFR 59, Subpart D (EPA Method 24).
3. Use adhesive that complies with the testing and product requirements of the California Department of Health Services' "Standard Practice for the Testing of Volatile Organic Emissions from Various Sources Using Small-Scale Environmental Chambers," including 2004 Addenda.

E. Mineral-Fiber Adhesive: Comply with MILA-3316C, Class 2, Grade A.
1. Products: Subject to compliance with requirements, [provide the following] [provide one (1) of the following] [available products that may be incorporated into the Work include, but are not limited to, the following]:
   a. Childers Brand, Specialty Construction Brands, Inc., a business of H. B. Fuller Company; CP-127.
   b. Eagle Bridges - Marathon Industries; 225.
   c. Foster Brand, Specialty Construction Brands, Inc., a business of H. B. Fuller Company; 85-60/85-70.
   d. Mon-Eco Industries, Inc.; 22-25.
   e. [Insert manufacturer's name; product name or designation].
2. For indoor applications, use adhesive that has a VOC content of 80 g/L or less when calculated according to 40 CFR 59, Subpart D (EPA Method 24).
3. Use adhesive that complies with the testing and product requirements of the California Department of Health Services' "Standard Practice for the Testing of Volatile Organic Emissions from Various Sources Using Small-Scale Environmental Chambers," including 2004 Addenda.

F. ASJ Adhesive, and FSK and PVDC Jacket Adhesive: Comply with MILA-3316C, Class 2, Grade A for bonding insulation jacket lap seams and joints.
1. Products: Subject to compliance with requirements, [provide the following] [provide one (1) of the following] [available products that may be incorporated into the Work include, but are not limited to, the following]:
   a. Childers Brand, Specialty Construction Brands, Inc., a business of H. B. Fuller Company; CP-82.
   b. Eagle Bridges - Marathon Industries; 225.
   c. Foster Brand, Specialty Construction Brands, Inc., a business of H. B. Fuller Company; 85-50.
   d. Mon-Eco Industries, Inc.; 22-25.
   e. [Insert manufacturer's name; product name or designation].
2. For indoor applications, use adhesive that has a VOC content of 50 g/L or less when calculated according to 40 CFR 59, Subpart D (EPA Method 24).
3. Use adhesive that complies with the testing and product requirements of the California Department of Health Services' "Standard Practice for the Testing of Volatile Organic Emissions from Various Sources Using Small-Scale Environmental Chambers," including 2004 Addenda.

G. PVC Jacket Adhesive: Compatible with PVC jacket.

1. Products: Subject to compliance with requirements, [provide the following] [provide one (1) of the following] [available products that may be incorporated into the Work include, but are not limited to, the following]:
   a. Dow Corning Corporation; 739, Dow Silicone.
   b. Johns Manville; Zeston Perma-Weld, CEEL-TITE Solvent Welding Adhesive.
   c. P.I.C. Plastics, Inc.; Welding Adhesive.
   d. Speedline Corporation; Polyco VP Adhesive.
   e. [Insert manufacturer's name; product name or designation].
2. For indoor applications, use adhesive that has a VOC content of 50 g/L or less when calculated according to 40 CFR 59, Subpart D (EPA Method 24).
3. Use adhesive that complies with the testing and product requirements of the California Department of Health Services' "Standard Practice for the Testing of Volatile Organic Emissions from Various Sources Using Small-Scale Environmental Chambers," including 2004 Addenda.

2.4 MASTICS

A. Materials shall be compatible with insulation materials, jackets, and substrates; comply with MILPRF-19565C, Type II.
   1. For indoor applications, use mastics that have a VOC content of 50 g/L or less when calculated according to 40 CFR 59, Subpart D (EPA Method 24).

B. Vapor-Barrier Mastic: Water based; suitable for indoor use on below ambient services.
   1. Products: Subject to compliance with requirements, [provide the following] [provide one (1) of the following] [available products that may be incorporated into the Work include, but are not limited to, the following]:
      a. Foster Brand, Specialty Construction Brands, Inc., a business of H. B. Fuller Company; 30-80/30-90.
      b. Vimasco Corporation; 749.
      c. [Insert manufacturer's name; product name or designation].
   2. Water-Vapor Permeance: ASTM E96, Procedure B, 0.013 perm at 43-mil dry film thickness.
   3. Service Temperature Range: Minus 20 to plus 180 degrees F.
   4. Solids Content: ASTM D1644, 58 percent by volume and 70 percent by weight.
   5. Color: White.

C. Vapor-Barrier Mastic: Solvent based; suitable for indoor use on below ambient services.
   1. Products: Subject to compliance with requirements, [provide the following] [provide one (1) of the following] [available products that may be incorporated into the Work include, but are not limited to, the following]:
      a. Childers Brand, Specialty Construction Brands, Inc., a business of H. B. Fuller Company; CP-30.
      b. Eagle Bridges - Marathon Industries; 501.
      c. Foster Brand, Specialty Construction Brands, Inc., a business of H. B. Fuller Company; 30-35.
      d. Mon-Eco Industries, Inc.; 55-10.
      e. [Insert manufacturer's name; product name or designation].
   2. Water-Vapor Permeance: ASTM F1249, 0.05 perm at 35-mil dry film thickness.
   3. Service Temperature Range: 0 to 180 degrees F.
   4. Solids Content: ASTM D1644, 44 percent by volume and 62 percent by weight.
   5. Color: White.

D. Vapor-Barrier Mastic: Solvent based; suitable for outdoor use on below ambient services.

1. Products: Subject to compliance with requirements, [provide the following] [provide one (1) of the following] [available products that may be incorporated into the Work include, but are not limited to, the following]:
   a. Childers Brand, Specialty Construction Brands, Inc., a business of H. B. Fuller Company; Encacel.
   b. Eagle Bridges - Marathon Industries; 570.
   c. Foster Brand, Specialty Construction Brands, Inc., a business of H. B. Fuller Company; 60-95/60-96.
   d. [Insert manufacturer's name; product name or designation].
2. Water-Vapor Permeance: ASTM F1249, 0.05 perm at 30-mil dry film thickness.
3. Service Temperature Range: Minus 50 to plus 220 degrees F.
4. Solids Content: ASTM D1644, 33 percent by volume and 46 percent by weight.
5. Color: White.

E. Breather Mastic: Water based; suitable for indoor and outdoor use on above ambient services.
1. Products: Subject to compliance with requirements, [provide the following] [provide one (1) of the following] [available products that may be incorporated into the Work include, but are not limited to, the following]:
   a. Childers Brand, Specialty Construction Brands, Inc., a business of H. B. Fuller Company; CP-10.
   b. Eagle Bridges - Marathon Industries; 550.
   c. Foster Brand, Specialty Construction Brands, Inc., a business of H. B. Fuller Company; 46-50.
   d. Mon-Eco Industries, Inc.; 55-50.
   e. Vimasco Corporation; WC-1/WC-5.
   f. [Insert manufacturer's name; product name or designation].
2. Water-Vapor Permeance: ASTM F1249, 1.8 perms at 0.0625-inch dry film thickness.
3. Service Temperature Range: Minus 20 to plus 180 degrees F.
4. Solids Content: 60 percent by volume and 66 percent by weight.
5. Color: White.

2.5 LAGGING ADHESIVES

A. Description: Comply with MILA-3316C, Class I, Grade A, and shall be compatible with insulation materials, jackets, and substrates.
1. For indoor applications, use lagging adhesives that have a VOC content of [Insert value] g/L or less when calculated according to 40 CFR 59, Subpart D (EPA Method 24).
2. Products: Subject to compliance with requirements, [provide the following] [provide one (1) of the following] [available products that may be incorporated into the Work include, but are not limited to, the following]:
   a. Childers Brand, Specialty Construction Brands, Inc., a business of H. B. Fuller Company; CP-50 AHV2.
   b. Foster Brand, Specialty Construction Brands, Inc., a business of H. B. Fuller Company; 30-36.
   c. Vimasco Corporation; 713 and 714.
   d. [Insert manufacturer's name; product name or designation].
3. Fire-resistant, water-based lagging adhesive and coating for use indoors to adhere fire-resistant lagging cloths over insulation.
4. Service Temperature Range: 0 to plus 180 degrees F.
5. Color: White.

2.6 SEALANTS

A. Joint Sealants:

1. Joint Sealants for Cellular-Glass Products: Subject to compliance with requirements, [provide the following] [provide one (1) of the following] [available products that may be incorporated into the Work include, but are not limited to, the following]:
   a. Childers Brand, Specialty Construction Brands, Inc., a business of H. B. Fuller Company; CP-76.
   b. Eagle Bridges - Marathon Industries; 405.
   c. Foster Brand, Specialty Construction Brands, Inc., a business of H. B. Fuller Company; 30-45.
   d. Mon-Eco Industries, Inc.; 44-05.
   e. Pittsburgh Corning Corporation; Pittseal 444.
   f. [Insert manufacturer's name; product name or designation].
2. Materials shall be compatible with insulation materials, jackets, and substrates.
3. Permanently flexible, elastomeric sealant.
4. Service Temperature Range: Minus 100 to plus 300 degrees F.
5. Color: White or gray.
6. For indoor applications, use sealants that have a VOC content of 420 g/L or less when calculated according to 40 CFR 59, Subpart D (EPA Method 24).
7. Use sealants that comply with the testing and product requirements of the California Department of Health Services' "Standard Practice for the Testing of Volatile Organic Emissions from Various Sources Using Small-Scale Environmental Chambers," including 2004 Addenda.

B. FSK and Metal Jacket Flashing Sealants:
1. Products: Subject to compliance with requirements, [provide the following] [provide one (1) of the following] [available products that may be incorporated into the Work include, but are not limited to, the following]:
   a. Childers Brand, Specialty Construction Brands, Inc., a business of H. B. Fuller Company; CP-76.
   b. Eagle Bridges - Marathon Industries; 405.
   c. Foster Brand, Specialty Construction Brands, Inc., a business of H. B. Fuller Company; 95-44.
   d. Mon-Eco Industries, Inc.; 44-05.
   e. [Insert manufacturer's name; product name or designation].
2. Materials shall be compatible with insulation materials, jackets, and substrates.
3. Fire- and water-resistant, flexible, elastomeric sealant.
4. Service Temperature Range: Minus 40 to plus 250 degrees F.
5. Color: Aluminum.
6. For indoor applications, use sealants that have a VOC content of 420 g/L or less when calculated according to 40 CFR 59, Subpart D (EPA Method 24).
7. Use sealants that comply with the testing and product requirements of the California Department of Health Services' "Standard Practice for the Testing of Volatile Organic Emissions from Various Sources Using Small-Scale Environmental Chambers," including 2004 Addenda.

C. ASJ Flashing Sealants, and Vinyl, PVDC, and PVC Jacket Flashing Sealants:
1. Products: Subject to compliance with requirements, [provide the following] [provide one (1) of the following] [available products that may be incorporated into the Work include, but are not limited to, the following]:
   a. Childers Brand, Specialty Construction Brands, Inc., a business of H. B. Fuller Company; CP-76.
   b. [Insert manufacturer's name; product name or designation].
2. Materials shall be compatible with insulation materials, jackets, and substrates.
3. Fire- and water-resistant, flexible, elastomeric sealant.
4. Service Temperature Range: Minus 40 to plus 250 degrees F.
5. Color: White.

6. For indoor applications, use sealants that have a VOC content of 420 g/L or less when calculated according to 40 CFR 59, Subpart D (EPA Method 24).
7. Use sealants that comply with the testing and product requirements of the California Department of Health Services' "Standard Practice for the Testing of Volatile Organic Emissions from Various Sources Using Small-Scale Environmental Chambers," including 2004 Addenda.

2.7 FACTORY-APPLIED JACKETS

A. Insulation system schedules indicate factory-applied jackets on various applications. When factory-applied jackets are indicated, comply with the following:
1. ASJ: White, kraft-paper, fiberglass-reinforced scrim with aluminum-foil backing; complying with ASTM C1136, Type I.
2. ASJ-SSL: ASJ with self-sealing, pressure-sensitive, acrylic-based adhesive covered by a removable protective strip; complying with ASTM C1136, Type I.
3. FSK Jacket: Aluminum-foil, fiberglass-reinforced scrim with kraft-paper backing; complying with ASTM C1136, Type II.
4. PVDC Jacket for Indoor Applications: 4-mil thick, white PVDC biaxially oriented barrier film with a permeance at 0.02 perm when tested according to ASTM E96 and with a flame-spread index of five (5) and a smoke-developed index of 20 when tested according to ASTM E84.
   a. Products: Subject to compliance with requirements, [provide the following] [provide one (1) of the following] [available products that may be incorporated into the Work include, but are not limited to, the following]:
      1) Dow Chemical Company (The); Saran 540 Vapor Retarder Film and Saran 560 Vapor Retarder Film.
      2) [Insert manufacturer's name; product name or designation].
5. PVDC Jacket for Outdoor Applications: 6-mil thick, white PVDC biaxially oriented barrier film with a permeance at 0.01 perm when tested according to ASTM E96 and with a flame-spread index of five (5) and a smoke-developed index of 25 when tested according to ASTM E84.
   a. Products: Subject to compliance with requirements, [provide the following] [provide one (1) of the following] [available products that may be incorporated into the Work include, but are not limited to, the following]:
      1) Dow Chemical Company (The); Saran 540 Vapor Retarder Film and Saran 560 Vapor Retarder Film.
      2) [Insert manufacturer's name; product name or designation].
6. PVDC-SSL Jacket: PVDC jacket with a self-sealing, pressure-sensitive, acrylic-based adhesive covered by a removable protective strip.
   a. Products: Subject to compliance with requirements, [provide the following] [provide one (1) of the following] [available products that may be incorporated into the Work include, but are not limited to, the following]:
      1) Dow Chemical Company (The); Saran 540 Vapor Retarder Film and Saran 560 Vapor Retarder Film.
      2) [Insert manufacturer's name; product name or designation].

2.8 FIELD-APPLIED FABRIC-REINFORCING MESH

A. Woven Glass-Fiber Fabric: Approximately six (6) oz/sq yd with a thread count of five (5) strands by five (5) strands/sq in for covering equipment.
1. Products: Subject to compliance with requirements, [provide the following] [provide one (1) of the following] [available products that may be incorporated into the Work include, but are not limited to, the following]:

a. Childers Brand, Specialty Construction Brands, Inc., a business of H. B. Fuller Company; Chil-Glas No. 5.
b. [Insert manufacturer's name; product name or designation].

B. Woven Polyester Fabric: Approximately one (1) oz/sq yd with a thread count of 10 strands by 10 strands/sq in, in a Leno weave, for equipment.
1. Products: Subject to compliance with requirements, [provide the following] [provide one (1) of the following] [available products that may be incorporated into the Work include, but are not limited to, the following]:
a. Foster Brand, Specialty Construction Brands, Inc., a business of H. B. Fuller Company; Mast-A-Fab.
b. Vimasco Corporation; Elastafab 894.
c. [Insert manufacturer's name; product name or designation].

2.9 FIELD-APPLIED CLOTHS

A. Woven Glass-Fiber Fabric: Comply with MILC-20079H, Type I, plain weave, and presized a minimum of 8 oz/sq yd.
1. Products: Subject to compliance with requirements, [provide the following] [provide one (1) of the following] [available products that may be incorporated into the Work include, but are not limited to, the following]:
a. Alpha Associates, Inc.; Alpha-Maritex 84215 and 84217/9485RW, Luben 59.
b. [Insert manufacturer's name; product name or designation].

2.10 FIELD-APPLIED JACKETS

A. Field-applied jackets shall comply with ASTM C921, Type I, unless otherwise indicated.

B. PVC Jacket: High-impact-resistant, UV-resistant PVC complying with ASTM D1784, Class 16354-C; thickness as scheduled; roll stock ready for shop or field cutting and forming. Thickness is indicated in field-applied jacket schedules.
1. Products: Subject to compliance with requirements, [provide the following] [provide one (1) of the following] [available products that may be incorporated into the Work include, but are not limited to, the following]:
a. Johns Manville; Zeston.
b. P.I.C. Plastics, Inc.; FG Series.
c. Proto Corporation; LoSmoke.
d. Speedline Corporation; SmokeSafe.
e. [Insert manufacturer's name; product name or designation].
2. Adhesive: As recommended by jacket material manufacturer.
3. Color: [White] [Color-code jackets based on system. Color as selected by Architect].
4. Factory-fabricated tank heads and tank side panels.

C. Metal Jacket:
1. Products: Subject to compliance with requirements, [provide the following] [provide one (1) of the following] [available products that may be incorporated into the Work include, but are not limited to, the following]:
a. Childers Brand, Specialty Construction Brands, Inc., a business of H. B. Fuller Company; Metal Jacketing Systems.
b. ITW Insulation Systems; Aluminum and Stainless Steel Jacketing.
c. RPR Products, Inc.; Insul-Mate.
d. [Insert manufacturer's name; product name or designation].

2. Aluminum Jacket: Comply with ASTM B209, Alloy 3003, 3005, 3105, or 5005, Temper H-14.
   a. [Sheet and roll stock ready for shop or field sizing] [Factory cut and rolled to size].
   b. Finish and thickness are indicated in field-applied jacket schedules.
   c. Moisture Barrier for Indoor Applications: [1-mil thick, heat-bonded polyethylene and kraft paper] [3-mil thick, heat-bonded polyethylene and kraft paper] [2.5-mil thick polysurlyn].
   d. Moisture Barrier for Outdoor Applications: [3-mil thick, heat-bonded polyethylene and kraft paper] [2.5-mil thick polysurlyn].
3. Stainless Steel Jacket: ASTM A167 or ASTM A240.
   a. [Sheet and roll stock ready for shop or field sizing] [Factory cut and rolled to size].
   b. Material, finish, and thickness are indicated in field-applied jacket schedules.
   c. Moisture Barrier for Indoor Applications: [1-mil thick, heat-bonded polyethylene and kraft paper] [3-mil thick, heat-bonded polyethylene and kraft paper] [2.5-mil thick polysurlyn].
   d. Moisture Barrier for Outdoor Applications: [3-mil thick, heat-bonded polyethylene and kraft paper] [2.5-mil thick polysurlyn].

2.11 TAPES

A. ASJ Tape: White vapor-retarder tape matching factory-applied jacket with acrylic adhesive, complying with ASTM C1136.
   1. Products: Subject to compliance with requirements, [provide the following] [provide one (1) of the following] [available products that may be incorporated into the Work include, but are not limited to, the following]:
      a. ABI, Ideal Tape Division; 428 AWF ASJ.
      b. Avery Dennison Corporation, Specialty Tapes Division; Fasson 0836.
      c. Compac Corporation; 104 and 105.
      d. Venture Tape; 1540 CW Plus, 1542 CW Plus, and 1542 CW Plus/SQ.
      e. [Insert manufacturer's name; product name or designation].
   2. Width: Three (3) inches.
   3. Thickness: 11.5 mils.
   4. Adhesion: 90 ounces force/inch in width.
   5. Elongation: Two (2) percent.
   6. Tensile Strength: 40-lbf/inch in width.
   7. ASJ Tape Disks and Squares: Precut disks or squares of ASJ tape.

B. FSK Tape: Foil-face, vapor-retarder tape matching factory-applied jacket with acrylic adhesive; complying with ASTM C1136.
   1. Products: Subject to compliance with requirements, [provide the following] [provide one (1) of the following] [available products that may be incorporated into the Work include, but are not limited to, the following]:
      a. ABI, Ideal Tape Division; 491 AWF FSK.
      b. Avery Dennison Corporation, Specialty Tapes Division; Fasson 0827.
      c. Compac Corporation; 110 and 111.
      d. Venture Tape; 1525 CW NT, 1528 CW, and 1528 CW/SQ.
      e. [Insert manufacturer's name; product name or designation].
   2. Width: Three (3) inches.
   3. Thickness: 6.5 mils.
   4. Adhesion: 90 ounces force/inch in width.
   5. Elongation: Two (2) percent.
   6. Tensile Strength: 40-lbf/inch in width.
   7. FSK Tape Disks and Squares: Precut disks or squares of FSK tape.

C. PVC Tape: White vapor-retarder tape matching field-applied PVC jacket with acrylic adhesive; suitable for indoor and outdoor applications.
   1. Products: Subject to compliance with requirements, [provide the following] [provide one (1) of the following] [available products that may be incorporated into the Work include, but are not limited to, the following]:
      a. ABI, Ideal Tape Division; 370 White PVC tape.
      b. Compac Corporation; 130.
      c. Venture Tape; 1506 CW NS.
      d. [Insert manufacturer's name; product name or designation].
   2. Width: Two (2) inches.
   3. Thickness: Six (6) mils.
   4. Adhesion: 64 ounces force/inch in width.
   5. Elongation: 500 percent.
   6. Tensile Strength: 18-lbf/inch in width.

D. Aluminum-Foil Tape: Vapor-retarder tape with acrylic adhesive.
   1. Products: Subject to compliance with requirements, [provide the following] [provide one (1) of the following] [available products that may be incorporated into the Work include, but are not limited to, the following]:
      a. ABI, Ideal Tape Division; 488 AWF.
      b. Avery Dennison Corporation, Specialty Tapes Division; Fasson 0800.
      c. Compac Corporation; 120.
      d. Venture Tape; 3520 CW.
      e. [Insert manufacturer's name; product name or designation].
   2. Width: Two (2) inches.
   3. Thickness: 3.7 mils.
   4. Adhesion: 100 ounces force/inch in width.
   5. Elongation: Five (5) percent.
   6. Tensile Strength: 34-lbf/inch in width.

E. PVDC Tape: White vapor-retarder PVDC tape with acrylic adhesive.
   1. Products: Subject to compliance with requirements, [provide the following] [provide one (1) of the following] [available products that may be incorporated into the Work include, but are not limited to, the following]:
      a. Dow Chemical Company (The); Saran 540 Vapor Retarder Tape and Saran 560 Vapor Retarder Tape.
      b. [Insert manufacturer's name; product name or designation].
   2. Width: Three (3) inches.
   3. Film Thickness: [Four (4) mils] [Six (6) mils].
   4. Adhesive Thickness: 1.5 mils.
   5. Elongation at Break: 145 percent.
   6. Tensile Strength: 55-lbf/inch in width.

2.12 SECUREMENTS

A. Bands:
   1. Products: Subject to compliance with requirements, [provide the following] [provide one (1) of the following] [available products that may be incorporated into the Work include, but are not limited to, the following]:
      a. ITW Insulation Systems; Gerrard Strapping and Seals.
      b. RPR Products, Inc.; Insul-Mate Strapping, Seals, and Springs.
      c. [Insert manufacturer's name; product name or designation].
   2. Stainless Steel: ASTM A167 or ASTM A240, [Type 304] [or] [Type 316]; 0.015-inch thick, [1/2-inch] [3/4-inch] wide with [wing seal] [or] [closed seal].

3. Aluminum: ASTM B209, Alloy 3003, 3005, 3105, or 5005; Temper H-14, 0.020-inch thick, [1/2-inch] [3/4-inch] wide with [wing seal] [or] [closed seal].
4. Springs: Twin spring set constructed of stainless steel with ends flat and slotted to accept metal bands. Spring size determined by manufacturer for application.

B. Insulation Pins and Hangers:
1. Capacitor-Discharge-Weld Pins: Copper- or zinc-coated steel pin, fully annealed for capacitor-discharge welding, [0.106-inch] [0.135-inch] diameter shank, length to suit depth of insulation indicated.
   a. Products: Subject to compliance with requirements, [provide the following] [provide one (1) of the following] [available products that may be incorporated into the Work include, but are not limited to, the following]:
      1) AGM Industries, Inc.; CWP-1.
      2) GEMCO; CD.
      3) Midwest Fasteners, Inc.; CD.
      4) Nelson Stud Welding; TPA, TPC, and TPS.
      5) [Insert manufacturer's name; product name or designation].
2. Cupped-Head, Capacitor-Discharge-Weld Pins: Copper- or zinc-coated steel pin, fully annealed for capacitor-discharge welding, [0.106-inch] [0.135-inch] diameter shank, length to suit depth of insulation indicated with integral 1-1/2-inch galvanized carbon-steel washer.
   a. Products: Subject to compliance with requirements, [provide the following] [provide one (1) of the following] [available products that may be incorporated into the Work include, but are not limited to, the following]:
      1) AGM Industries, Inc.; CHP-1.
      2) GEMCO; Cupped Head Weld Pin.
      3) Midwest Fasteners, Inc.; Cupped Head.
      4) Nelson Stud Welding; CHP.
      5) [Insert manufacturer's name; product name or designation].
3. Metal, Adhesively Attached, Perforated-Base Insulation Hangers: Baseplate welded to projecting spindle that is capable of holding insulation, of thickness indicated, securely in position indicated when self-locking washer is in place.
   a. Products: Subject to compliance with requirements, [provide the following] [provide one (1) of the following] [available products that may be incorporated into the Work include, but are not limited to, the following]:
      1) AGM Industries, Inc.; Tactoo Perforated Base Insul-Hangers.
      2) GEMCO; Perforated Base.
      3) Midwest Fasteners, Inc.; Spindle.
      4) [Insert manufacturer's name; product name or designation].
   b. Baseplate: Perforated, galvanized carbon-steel sheet, 0.030 inch thick by two (2) inches square.
   c. Spindle: [Copper- or zinc-coated, low-carbon steel] [Aluminum] [Stainless steel], fully annealed, 0.106-inch diameter shank, length to suit depth of insulation indicated.
   d. Adhesive: Recommended by hanger manufacturer. Product with demonstrated capability to bond insulation hanger securely to substrates indicated without damaging insulation, hangers, and substrates.
4. Nonmetal, Adhesively Attached, Perforated-Base Insulation Hangers: Baseplate fastened to projecting spindle that is capable of holding insulation, of thickness indicated, securely in position indicated when self-locking washer is in place.
   a. Products: Subject to compliance with requirements, [provide the following] [provide one (1) of the following] [available products that may be incorporated into the Work include, but are not limited to, the following]:
      1) GEMCO; Nylon Hangers.
      2) Midwest Fasteners, Inc.; Nylon Insulation Hangers.
      3) [Insert manufacturer's name; product name or designation].

b. Baseplate: Perforated, nylon sheet, 0.030-inch thick by 1-1/2 inches in diameter.
c. Spindle: Nylon, 0.106-inch diameter shank, length to suit depth of insulation indicated, up to 2-1/2 inches.
d. Adhesive: Recommended by hanger manufacturer. Product with demonstrated capability to bond insulation hanger securely to substrates indicated without damaging insulation, hangers, and substrates.

5. Self-Sticking-Base Insulation Hangers: Baseplate welded to projecting spindle that is capable of holding insulation, of thickness indicated, securely in position indicated when self-locking washer is in place.
   a. Products: Subject to compliance with requirements, [provide the following] [provide one (1) of the following] [available products that may be incorporated into the Work include, but are not limited to, the following]:
      1) AGM Industries, Inc.; Tactoo Self-Adhering Insul-Hangers.
      2) GEMCO; Peel & Press.
      3) Midwest Fasteners, Inc.; Self Stick.
      4) [Insert manufacturer's name; product name or designation].
   b. Baseplate: Galvanized carbon-steel sheet, 0.030 inch thick by 2 inches square.
   c. Spindle: [Copper- or zinc-coated, low-carbon steel] [Aluminum] [Stainless steel], fully annealed, 0.106-inch diameter shank, length to suit depth of insulation indicated.
   d. Adhesive-backed base with a peel-off protective cover.
6. Insulation-Retaining Washers: Self-locking washers formed from 0.016-inch thick, [galvanized-steel] [aluminum] [stainless-steel] sheet, with beveled edge sized as required to hold insulation securely in place but not less than 1-1/2 inches in diameter.
   a. Products: Subject to compliance with requirements, [provide the following] [provide one (1) of the following] [available products that may be incorporated into the Work include, but are not limited to, the following]:
      1) AGM Industries, Inc.; RC 150.
      2) GEMCO; R-150.
      3) Midwest Fasteners, Inc.; WA-150.
      4) Nelson Stud Welding; Speed Clips.
      5) [Insert manufacturer's name; product name or designation].
   b. Protect ends with capped self-locking washers incorporating a spring steel insert to ensure permanent retention of cap in exposed locations.
7. Nonmetal Insulation-Retaining Washers: Self-locking washers formed from 0.016-inch thick nylon sheet, with beveled edge sized as required to hold insulation securely in place but not less than 1-1/2 inches in diameter.
   a. Manufacturers: Subject to compliance with requirements, [provide products by one (1) of the following] [available manufacturers offering products that may be incorporated into the Work include, but are not limited to, the following]:
      1) GEMCO.
      2) Midwest Fasteners, Inc.
      3) [Insert manufacturer's name].

C. Staples: Outward-clinching insulation staples, nominal 3/4-inch wide, stainless steel or Monel.

D. Wire: [0.080-inch nickel-copper alloy] [0.062-inch soft-annealed, stainless steel] [0.062-inch soft-annealed, galvanized steel].
   1. Manufacturers: Subject to compliance with requirements, [provide products by one (1) of the following] [available manufacturers offering products that may be incorporated into the Work include, but are not limited to, the following]:
      a. C & F Wire.
      b. [Insert manufacturer's name].

2.13 CORNER ANGLES

A. PVC Corner Angles: 30 mils thick, minimum 1 by 1 inch, PVC according to ASTM D1784, Class 16354-C. White or color-coded to match adjacent surface.

B. Aluminum Corner Angles: 0.040 inch thick, minimum 1 by 1 inch, aluminum according to ASTM B209, Alloy 3003, 3005, 3105, or 5005; Temper H-14.

C. Stainless Steel Corner Angles: 0.024 inch thick, minimum 1 by 1 inch, stainless steel according to ASTM A167 or ASTM A240, [Type 304] [or] [Type 316].

PART 3 - EXECUTION

3.1 EXAMINATION

A. Examine substrates and conditions for compliance with requirements for installation tolerances and other conditions affecting performance of insulation application.
   1. Verify that systems and equipment to be insulated have been tested and are free of defects.
   2. Verify that surfaces to be insulated are clean and dry.

B. Proceed with installation only after unsatisfactory conditions have been corrected.

3.2 PREPARATION

A. Surface Preparation: Clean and dry surfaces to receive insulation. Remove materials that will adversely affect insulation application.

B. Surface Preparation: Clean and prepare surfaces to be insulated. Before insulating, apply a corrosion coating to insulated surfaces as follows:
   1. Stainless Steel: Coat 300 series stainless steel with an epoxy primer five (5) mils thick and an epoxy finish five (5) mils thick if operating in a temperature range between 140 and 300 degrees F. Consult coating manufacturer for appropriate coating materials and application methods for operating temperature range.
   2. Carbon Steel: Coat carbon steel operating at a service temperature between 32 and 300 degrees F with an epoxy coating. Consult coating manufacturer for appropriate coating materials and application methods for operating temperature range.

C. Coordinate insulation installation with the trade installing heat tracing. Comply with requirements for heat tracing that apply to insulation.

D. Mix insulating cements with clean potable water; if insulating cements are to be in contact with stainless steel surfaces, use demineralized water.

3.3 GENERAL INSTALLATION REQUIREMENTS

A. Install insulation materials, accessories, and finishes with smooth, straight, and even surfaces; free of voids throughout the length of equipment.

B. Install insulation materials, forms, vapor barriers or retarders, jackets, and thicknesses required for each item as specified in insulation system schedules.

C. Install accessories compatible with insulation materials and suitable for the service. Install accessories that do not corrode, soften, or otherwise attack insulation or jacket in either wet or dry state.

D. Install insulation with longitudinal seams at top and bottom of horizontal runs.

E. Install multiple layers of insulation with longitudinal and end seams staggered.

F. Keep insulation materials dry during application and finishing.

G. Install insulation with tight longitudinal seams and end joints. Bond seams and joints with adhesive recommended by insulation material manufacturer.

H. Install insulation with least number of joints practical.

I. Where vapor barrier is indicated, seal joints, seams, and penetrations in insulation at hangers, supports, anchors, and other projections with vapor-barrier mastic.
   1. Install insulation continuously through hangers and around anchor attachments.
   2. For insulation application where vapor barriers are indicated, extend insulation on anchor legs from point of attachment to supported item to point of attachment to structure. Taper and seal ends at attachment to structure with vapor-barrier mastic.
   3. Install insert materials and install insulation to tightly join the insert. Seal insulation to insulation inserts with adhesive or sealing compound recommended by insulation material manufacturer.
   4. Cover inserts with jacket material matching adjacent pipe insulation. Install shields over jacket, arranged to protect jacket from tear or puncture by hanger, support, and shield.

J. Apply adhesives, mastics, and sealants at manufacturer's recommended coverage rate and wet and dry film thicknesses.

K. Install insulation with factory-applied jackets as follows:
   1. Draw jacket tight and smooth.
   2. Cover circumferential joints with 3-inch wide strips, of same material as insulation jacket. Secure strips with adhesive and outward clinching staples along both edges of strip, spaced four (4) inches o.c.
   3. Overlap jacket longitudinal seams at least 1-1/2 inches. Install insulation with longitudinal seams at bottom of pipe. Clean and dry surface to receive self-sealing lap. Staple laps with outward clinching staples along edge at [two (2) inches] [four (4) inches] o.c.
      a. For below ambient services, apply vapor-barrier mastic over staples.
   4. Cover joints and seams with tape, according to insulation material manufacturer's written instructions, to maintain vapor seal.
   5. Where vapor barriers are indicated, apply vapor-barrier mastic on seams and joints.

L. Cut insulation in a manner to avoid compressing insulation more than 75 percent of its nominal thickness.

M. Finish installation with systems at operating conditions. Repair joint separations and cracking due to thermal movement.

N. Repair damaged insulation facings by applying same facing material over damaged areas. Extend patches at least four (4) inches beyond damaged areas. Adhere, staple, and seal patches similar to butt joints.

O. For above ambient services, do not install insulation to the following:
   1. Vibration-control devices.

2. Testing agency labels and stamps.
3. Nameplates and data plates.
4. Manholes.
5. Handholes.
6. Cleanouts.

3.4 INSTALLATION OF EQUIPMENT, TANK, AND VESSEL INSULATION

A. Mineral-Fiber, Pipe, and Tank Insulation Installation for Tanks and Vessels: Secure insulation with adhesive and anchor pins and speed washers.
   1. Apply adhesives according to manufacturer's recommended coverage rates per unit area, for [100] [50] [Insert number] percent coverage of tank and vessel surfaces.
   2. Groove and score insulation materials to fit as closely as possible to equipment, including contours. Bevel insulation edges for cylindrical surfaces for tight joints. Stagger end joints.
   3. Protect exposed corners with secured corner angles.
   4. Install adhesively attached or self-sticking insulation hangers and speed washers on sides of tanks and vessels as follows:
      a. Do not weld anchor pins to ASME-labeled pressure vessels.
      b. Select insulation hangers and adhesive that are compatible with service temperature and with substrate.
      c. On tanks and vessels, maximum anchor-pin spacing is three (3) inches from insulation end joints, and 16 inches o.c. in both directions.
      d. Do not overcompress insulation during installation.
      e. Cut and miter insulation segments to fit curved sides and domed heads of tanks and vessels.
      f. Impale insulation over anchor pins and attach speed washers.
      g. Cut excess portion of pins extending beyond speed washers or bend parallel with insulation surface. Cover exposed pins and washers with tape matching insulation facing.
   5. Secure each layer of insulation with stainless-steel or aluminum bands. Select band material compatible with insulation materials.
   6. Where insulation hangers on equipment and vessels are not permitted or practical and where insulation support rings are not provided, install a girdle network for securing insulation. Stretch prestressed aircraft cable around the diameter of vessel and make taut with clamps, turnbuckles, or breather springs. Place one (1) circumferential girdle around equipment approximately six (6) inches from each end. Install wire or cable between two (2) circumferential girdles 12 inches o.c. Install a wire ring around each end and around outer periphery of center openings, and stretch prestressed aircraft cable radially from the wire ring to nearest circumferential girdle. Install additional circumferential girdles along the body of equipment or tank at a minimum spacing of 48 inches o.c. Use this network for securing insulation with tie wire or bands.
   7. Stagger joints between insulation layers at least three (3) inches.
   8. Install insulation in removable segments on equipment access doors, manholes, handholes, and other elements that require frequent removal for service and inspection.
   9. Bevel and seal insulation ends around manholes, handholes, ASME stamps, and nameplates.
   10. For equipment with surface temperatures below ambient, apply mastic to open ends, joints, seams, breaks, and punctures in insulation.

B. Flexible Elastomeric Thermal Insulation Installation for Tanks and Vessels: Install insulation over entire surface of tanks and vessels.
   1. Apply [100] [50] [Insert number] percent coverage of adhesive to surface with manufacturer's recommended adhesive.
   2. Seal longitudinal seams and end joints.

C. Insulation Installation on Pumps:
   1. Fabricate metal boxes lined with insulation. Fit boxes around pumps and coincide box joints with splits in pump casings. Fabricate joints with outward bolted flanges. Bolt flanges on 6-inch centers, starting at corners. Install 3/8-inch diameter fasteners with wing nuts. Alternatively, secure the box sections together using a latching mechanism.
   2. Fabricate boxes from [galvanized steel] [aluminum] [stainless steel], at least [0.040-inch] [0.050-inch] [0.060-inch] thick.
   3. For below ambient services, install a vapor barrier at seams, joints, and penetrations. Seal between flanges with replaceable gasket material to form a vapor barrier.

3.5 INSTALLATION OF CALCIUM SILICATE INSULATION

A. Insulation Installation on Domestic Water Boiler Breechings:
   1. Secure single-layer insulation with stainless-steel bands at 12-inch intervals and tighten bands without deforming insulation material.
   2. Install two-layer insulation with joints tightly butted and staggered at least three (3) inches. Secure inner layer with wire spaced at 12-inch intervals. Secure outer layer with stainless-steel bands at 12-inch intervals.
   3. On exposed applications without metal jacket, finish insulation surface with a skim coat of mineral-fiber, hydraulic-setting cement. When cement is dry, apply flood coat of lagging adhesive and press on one (1) layer of glass cloth. Overlap edges at least one (1) inch. Apply finish coat of lagging adhesive over glass cloth. Thin finish coat to achieve smooth, uniform finish.

3.6 INSTALLATION OF FLEXIBLE ELASTOMERIC INSULATION

A. Seal longitudinal seams and end joints with manufacturer's recommended adhesive to eliminate openings in insulation that allow passage of air to surface being insulated.

3.7 FIELD-APPLIED JACKET INSTALLATION

A. Where glass-cloth jackets are indicated, install directly over bare insulation or insulation with factory-applied jackets.
   1. Draw jacket smooth and tight to surface with 2-inch overlap at seams and joints.
   2. Embed glass cloth between two (2) 0.062-inch thick coats of lagging adhesive.
   3. Completely encapsulate insulation with coating, leaving no exposed insulation.

B. Where FSK jackets are indicated, install as follows:
   1. Draw jacket material smooth and tight.
   2. Install lap or joint strips with same material as jacket.
   3. Secure jacket to insulation with manufacturer's recommended adhesive.
   4. Install jacket with 1-1/2-inch laps at longitudinal seams and 3-inch wide joint strips at end joints.
   5. Seal openings, punctures, and breaks in vapor-retarder jackets and exposed insulation with vapor-barrier mastic.

C. Where PVC jackets are indicated, install with 1-inch overlap at longitudinal seams and end joints; for horizontal applications, install with longitudinal seams along top and bottom of tanks and vessels. Seal with manufacturer's recommended adhesive.
   1. Apply two (2) continuous beads of adhesive to seams and joints, one (1) bead under lap and the finish bead along seam and joint edge.

D. Where metal jackets are indicated, install with 2-inch overlap at longitudinal seams and end joints. Overlap longitudinal seams arranged to shed water. Seal end joints with weatherproof sealant recommended by insulation manufacturer. Secure jacket with stainless-steel bands 12 inches o.c. and at end joints.

E. Where PVDC jackets are indicated, install as follows:
1. Jacket can be wrapped in cigarette fashion along length of roll for insulation systems with an outer circumference of 33-1/2 inches or less. 33-1/2-inch circumference limit allows for 2-inch overlap seal. Using the length of roll allows for longer sections of jacket to be installed at one (1) time. Use adhesive on the lap seal. Visually inspect lap seal for "fishmouthing," and use PVDC tape along lap seal to secure joint.
2. Repair holes or tears in PVDC jacket by placing PVDC tape over the hole or tear and wrapping a minimum of 1-1/4 circumferences to avoid damage to tape edges.

3.8 FINISHES

A. Insulation with ASJ, Glass-Cloth, or Other Paintable Jacket Material: Paint jacket with paint system identified below and as specified in Division 09 painting sections.
1. Flat Acrylic Finish: [Two (2)] [Insert number] finish coats over a primer that is compatible with jacket material and finish coat paint. Add fungicidal agent to render fabric mildew proof.
a. Finish Coat Material: Interior, flat, latex-emulsion size.

B. Flexible Elastomeric Thermal Insulation: After adhesive has fully cured, apply two (2) coats of insulation manufacturer's recommended protective coating.

C. Color: Final color as selected by Architect. Vary first and second coats to allow visual inspection of the completed Work.

D. Do not field paint aluminum or stainless-steel jackets.

3.9 FIELD QUALITY CONTROL

A. Testing Agency: [Owner will engage] [Engage] a qualified testing agency to perform tests and inspections.

B. Perform tests and inspections.

C. Tests and Inspections:
1. Inspect field-insulated equipment, randomly selected by Architect, by removing field-applied jacket and insulation in layers in reverse order of their installation. Extent of inspection shall be limited to [one (1)] [Insert number] location(s) for each type of equipment defined in the "Equipment Insulation Schedule" article. For large equipment, remove only a portion adequate to determine compliance.

D. All insulation applications will be considered defective Work if sample inspection reveals noncompliance with requirements.

3.10 DOMESTIC WATER BOILER BREECHING INSULATION SCHEDULE

A. Round, exposed breeching and connector insulation shall be [one (1) of] the following:
1. Calcium Silicate: Four (4) inches thick.

2. High-Temperature Mineral-Fiber Blanket: Three (3) inches thick and 3-lb/cu ft nominal density.
3. High-Temperature Mineral-Fiber Board: Three (3) inches thick and [3-lb/cu ft] [6-lb/cu ft] nominal density.

B. Round, concealed breeching and connector insulation shall be [one (1) of] the following:
1. Calcium Silicate: Four (4) inches thick.
2. High-Temperature Mineral-Fiber Blanket: Three (3) inches thick and 3-lb/cu ft nominal density.
3. High-Temperature Mineral-Fiber Board: Three (3) inches thick and [3-lb/cu ft] [6-lb/cu ft] nominal density.

C. Rectangular, exposed breeching and connector insulation shall be [one (1) of] the following:
1. Calcium Silicate: Four (4) inches thick.
2. High-Temperature Mineral-Fiber Blanket: Three (3) inches thick and 3-lb/cu ft nominal density.
3. High-Temperature Mineral-Fiber Board: Three (3) inches thick and [3-lb/cu ft] [6-lb/cu ft] nominal density.

D. Rectangular, concealed breeching and connector insulation shall be [one (1) of] the following:
1. Calcium Silicate: Four (4) inches thick.
2. High-Temperature Mineral-Fiber Blanket: Three (3) inches thick and 3-lb/cu ft nominal density.
3. High-Temperature Mineral-Fiber Board: Three (3) inches thick and [3-lb/cu ft] [6-lb/cu ft] nominal density.

3.11 EQUIPMENT INSULATION SCHEDULE

A. Insulation materials and thicknesses are identified below. If more than one (1) material is listed for a type of equipment, selection from materials listed is Contractor's option.

B. Insulate indoor and outdoor equipment that is not factory insulated.

C. Heat-exchanger (water-to-water for domestic water heating service) insulation shall be [one (1) of] the following:
1. Calcium Silicate: [Three (3) inches] [Insert dimension] thick.
2. Cellular Glass: [Three (3) inches] [Insert dimension] thick.
3. Mineral-Fiber Blanket: [Two (2) inches] [Insert dimension] thick and [2-lb/cu ft] [3-lb/cu ft] [6-lb/cu ft] nominal density.
4. Mineral-Fiber Board: [Two (2) inches] [Insert dimension] thick and [2-lb/cu ft] [3-lb/cu ft] [6-lb/cu ft] nominal density.
5. Mineral-Fiber Pipe and Tank: [Two (2) inches] [Insert dimension] thick.
6. Mineral-Fiber Preformed Pipe Insulation, Type I: [Two (2) inches] [Insert dimension] thick.

D. Steam-to-hot-water converter insulation shall be [one (1) of] the following:
1. Calcium Silicate: [Three (3) inches] [Insert dimension] thick.
2. Cellular Glass: [Three (3) inches] [Insert dimension] thick.
3. Mineral-Fiber Blanket: [Two (2) inches] [Insert dimension] thick and [2-lb/cu ft] [3-lb/cu ft] [6-lb/cu ft] nominal density.
4. Mineral-Fiber Board: [Two (2) inches] [Insert dimension] thick and [2-lb/cu ft] [3-lb/cu ft] [6-lb/cu ft] nominal density.
5. Mineral-Fiber Pipe and Tank: [Two (2) inches] [Insert dimension] thick.

6. Mineral-Fiber Preformed Pipe Insulation, Type I: [Two (2) inches] [Insert dimension] thick.

E. Domestic water pump insulation shall be [one (1) of] the following:
1. Cellular Glass: [Two (2) inches] [Insert dimension] thick.
2. Mineral-Fiber Blanket: [One (1) inch] [Insert dimension] thick and [2-lb/cu ft] [3-lb/cu ft] [6-lb/cu ft] nominal density.
3. Mineral-Fiber Board: [One (1) inch] [Insert dimension] thick and [2-lb/cu ft] [3-lb/cu ft] [6-lb/cu ft] nominal density.

F. Domestic chilled-water (potable) pump insulation shall be [one (1) of] the following:
1. Cellular Glass: [Three (3) inches] [Insert dimension] thick.
2. Mineral-Fiber Blanket: [Two (2) inches] [Insert dimension] thick and [2-lb/cu ft] [3-lb/cu ft] [6-lb/cu ft] nominal density.
3. Mineral-Fiber Board: [Two (2) inches] [Insert dimension] thick and [2-lb/cu ft] [3-lb/cu ft] [6-lb/cu ft] nominal density.

G. Domestic hot-water pump insulation shall be [one (1) of] the following:
1. Cellular Glass: [Two (2) inches] [Insert dimension] thick.
2. Mineral-Fiber Blanket: [One (1) inch] [Insert dimension] thick and [2-lb/cu ft] [3-lb/cu ft] [6-lb/cu ft] nominal density.
3. Mineral-Fiber Board: [One (1) inch] [Insert dimension] thick and [2-lb/cu ft] [3-lb/cu ft] [6-lb/cu ft] nominal density.

H. Domestic water, domestic chilled-water (potable), and domestic hot-water hydropneumatic tank insulation shall be [one (1) of] the following:
1. Cellular Glass: [1-1/2 inches] [Insert dimension] thick.
2. Flexible Elastomeric: [One (1) inch] [Insert dimension] thick.
3. Mineral-Fiber Blanket: [One (1) inch] [Insert dimension] thick and [2-lb/cu ft] [3-lb/cu ft] [6-lb/cu ft] nominal density.
4. Mineral-Fiber Board: [One (1) inch] [Insert dimension] thick and [2-lb/cu ft] [3-lb/cu ft] [6-lb/cu ft] nominal density.
5. Mineral-Fiber Pipe and Tank: [One (1) inch] [Insert dimension] thick.
6. Polyolefin: [One (1) inch] [Insert dimension] thick.

I. Domestic hot-water storage tank insulation shall be [one (1) of] the following, of thickness to provide an R-value of [12.5] [Insert value]:
1. Cellular glass.
2. Mineral-Fiber Blanket: [2-lb/cu ft] [3-lb/cu ft] [6-lb/cu ft] nominal density.
3. Mineral-Fiber Board: [2-lb/cu ft] [3-lb/cu ft] [6-lb/cu ft] nominal density.
4. Mineral-fiber pipe and tank.

J. Domestic water storage tank insulation shall be [one (1) of] the following:
1. Cellular Glass: [Two (2) inches] [Insert dimension] thick.
2. Flexible Elastomeric: [One (1) inch] [Insert dimension] thick.
3. Mineral-Fiber Blanket: [One (1) inch] [Insert dimension] thick and [2-lb/cu ft] [3-lb/cu ft] [6-lb/cu ft] nominal density.
4. Mineral-Fiber Board: [One (1) inch] [Insert dimension] thick and [2-lb/cu ft] [3-lb/cu ft] [6-lb/cu ft] nominal density.
5. Mineral-Fiber Pipe and Tank: [One (1) inch] [Insert dimension] thick.
6. Polyolefin: [One (1) inch] [Insert dimension] thick.

K. Domestic chilled-water (potable) storage tank insulation shall be [one (1) of] the following:
1. Cellular Glass: [Two (2) inches] [Insert dimension] thick.
2. Flexible Elastomeric: [One (1) inch] [Insert dimension] thick.

3. Mineral-Fiber Blanket: [One (1) inch] [Insert dimension] thick and [2-lb/cu ft] [3-lb/cu ft] [6-lb/cu ft] nominal density.
4. Mineral-Fiber Board: [One (1) inch] [Insert dimension] thick and [2-lb/cu ft] [3-lb/cu ft] [6-lb/cu ft] nominal density.
5. Mineral-Fiber Pipe and Tank: [One (1) inch] [Insert dimension] thick.
6. Polyolefin: [One (1) inch] [Insert dimension] thick.

L. Domestic water filter-housing insulation shall be [one (1) of] the following:
1. Cellular Glass: [Three (3) inches] [Insert dimension] thick.
2. Mineral-Fiber Blanket: [Two (2) inches] [Insert dimension] thick and [2-lb/cu ft] [3-lb/cu ft] [6-lb/cu ft] nominal density.
3. Mineral-Fiber Board: [Two (2) inches] [Insert dimension] thick and [2-lb/cu ft] [3-lb/cu ft] [6-lb/cu ft] nominal density.
4. Mineral-Fiber Pipe and Tank: [Two (2) inches] [Insert dimension] thick.

3.12 INDOOR, FIELD-APPLIED JACKET SCHEDULE

A. Install jacket over insulation material. For insulation with factory-applied jacket, install the field-applied jacket over the factory-applied jacket.

B. If more than one (1) material is listed, selection from materials listed is Contractor's option.

C. Equipment, Concealed:
1. None.
2. [PVC] [PVC, Color-Coded by System]: [20 mils] [30 mils] thick.
3. Aluminum, [Smooth] [Corrugated] [Stucco Embossed]: [0.016-inch] [0.020-inch] [0.024-inch] [0.032-inch] [0.040-inch] thick.
4. Painted Aluminum, [Smooth] [Corrugated] [Stucco Embossed]: [0.016-inch] [0.020-inch] [0.024-inch] [0.032-inch] thick.
5. Stainless Steel, [Type 304] [or] [Type 316], [Smooth 2B Finish] [Corrugated] [Stucco Embossed]: [0.010-inch] [0.016-inch] [0.020-inch] [0.024-inch] thick.
6. [Insert jacket type].

D. Equipment, Exposed, up to 48 Inches in Diameter or with Flat Surfaces up to 72 Inches:
1. None.
2. [PVC] [PVC, Color-Coded by System]: [20 mils] [30 mils] thick.
3. Aluminum, [Smooth] [Corrugated] [Stucco Embossed]: [0.016-inch] [0.020-inch] [0.024-inch] [0.032-inch] [0.040-inch] thick.
4. Painted Aluminum, [Smooth] [Corrugated] [Stucco Embossed]: [0.016-inch] [0.020-inch] [0.024-inch] [0.032-inch] thick.
5. Stainless Steel, [Type 304] [or] [Type 316], [Smooth 2B Finish] [Corrugated] [Stucco Embossed]: [0.010-inch] [0.016-inch] [0.020-inch] [0.024-inch] thick.
6. [Insert jacket type].

E. Equipment, Exposed, Larger Than 48 Inches in Diameter or with Flat Surfaces Larger Than 72 Inches:
1. None.
2. [Painted] Aluminum, [Smooth] [Stucco Embossed] with [1-1/4-Inch Deep Corrugations] [2-1/2-Inch Deep Corrugations] [4-by-1-Inch Box Ribs]: [0.032-inch] [0.040-inch] thick.
3. Stainless Steel, [Type 304] [or] [Type 316], [Smooth] [Stucco Embossed], with [1-1/4-Inch Deep Corrugations] [2-1/2-Inch Deep Corrugations] [4-by-1-Inch Box Ribs]: [0.020-inch] [0.024-inch] thick.
4. [Insert jacket type].

3.13 OUTDOOR, FIELD-APPLIED JACKET SCHEDULE

A. Install jacket over insulation material. For insulation with factory-applied jacket, install the field-applied jacket over the factory-applied jacket.

B. If more than one (1) material is listed, selection from materials listed is Contractor's option.

C. Equipment, Concealed:
   1. None.
   2. [PVC] [PVC, Color-Coded by System]: [20 mils] [30 mils] thick.
   3. Aluminum, [Smooth] [Corrugated] [Stucco Embossed]: [0.016-inch] [0.020-inch] [0.024-inch] [0.032-inch] [0.040-inch] thick.
   4. Painted Aluminum, [Smooth] [Corrugated] [Stucco Embossed]: [0.016-inch] [0.020-inch] [0.024-inch] [0.032-inch] thick.
   5. Stainless Steel, [Type 304] [or] [Type 316], [Smooth 2B Finish] [Corrugated] [Stucco Embossed]: [0.010-inch] [0.016-inch] [0.020-inch] [0.024-inch] thick.
   6. [Insert jacket type].

D. Equipment, Exposed, up to 48 Inches in Diameter or with Flat Surfaces up to 72 Inches:
   1. [Painted] Aluminum, [Smooth] [Corrugated] [Stucco Embossed] [with Z-Shaped Locking Seam]: [0.016-inch] [0.020-inch] [0.024-inch] [0.032-inch] [0.040 inch] thick.
   2. Stainless Steel, [Type 304] [or] [Type 316], [Smooth 2B Finish] [Corrugated] [Stucco Embossed] [with Z-Shaped Locking Seam]: [0.010-inch] [0.016-inch] [0.020-inch] [0.024-inch] thick.
   3. [Insert jacket type].

E. Equipment, Exposed, Larger Than 48 Inches in Diameter or with Flat Surfaces Larger Than 72 Inches:
   1. [Painted] Aluminum, [Smooth] [Stucco Embossed] with [1-1/4-Inch Deep Corrugations] [2-1/2-Inch Deep Corrugations] [4-by-1-Inch Box Ribs]: [0.032-inch] [0.040-inch] thick.
   2. Stainless Steel, [Type 304] [or] [Type 316], [Smooth] [Stucco Embossed], with [1-1/4-Inch Deep Corrugations] [2-1/2-Inch Deep Corrugations] [4-by-1-Inch Box Ribs]: [0.020-inch] [0.024-inch] thick.
   3. [Insert jacket type].

END OF SECTION 22 07 16

SECTION 22 07 19 - PLUMBING PIPING INSULATION

PART 1 - GENERAL

1.1 RELATED DOCUMENTS

A. Drawings and general provisions of the Contract, including General and Supplementary Conditions and Division 01 specification sections, apply to this section.

1.2 SECTION INCLUDES

A. Insulating the following plumbing piping services:
1. Domestic cold-water piping.
2. Domestic hot-water piping.
3. Domestic recirculating hot-water piping.
4. Domestic chilled-water piping for drinking fountains.
5. Sanitary waste piping exposed to freezing conditions.
6. Storm-water piping exposed to freezing conditions.
7. Roof drains and rainwater leaders.
8. Supplies and drains for handicap-accessible lavatories and sinks.

1.3 RELATED SECTIONS

A. Section 22 07 16 - Plumbing Equipment Insulation.

1.4 SUBMITTALS

A. Submit under provisions of Section 01 33 00.

B. Product Data: For each type of product indicated. Include thermal conductivity, water-vapor permeance thickness, and jackets (both factory- and field-applied, if any).

C. Shop Drawings: Include plans, elevations, sections, details, and attachments to other work.
1. Detail application of protective shields, saddles, and inserts at hangers for each type of insulation and hanger.
2. Detail attachment and covering of heat tracing inside insulation.
3. Detail insulation application at pipe expansion joints for each type of insulation.
4. Detail insulation application at elbows, fittings, flanges, valves, and specialties for each type of insulation.
5. Detail removable insulation at piping specialties, equipment connections, and access panels.
6. Detail application of field-applied jackets.
7. Detail application at linkages of control devices.

D. Samples: For each type of insulation and jacket indicated. Identify each sample, describing product and intended use. Sample sizes are as follows:
1. Preformed Pipe Insulation Materials: 12 inches long by NPS 2.
2. Jacket Materials for Pipe: 12 inches long by NPS 2.
3. Sheet Jacket Materials: 12 inches square.

4. Manufacturer's Color Charts: For products where color is specified, show the full range of colors available for each type of finish material.

E. Qualification Data: For qualified installer.

F. Material Test Reports: From a qualified testing agency acceptable to authorities having jurisdiction indicating, interpreting, and certifying test results for compliance of insulation materials, sealers, attachments, cements, and jackets, with requirements indicated. Include dates of tests and test methods employed.

G. Field quality-control reports.

1.5 QUALITY ASSURANCE

A. Installer Qualifications: Skilled mechanics who have successfully completed an apprenticeship program or another craft training program certified by the Department of Labor, Bureau of Apprenticeship and Training.

B. Surface-Burning Characteristics: For insulation and related materials, as determined by testing identical products according to ASTM E84 by a testing agency acceptable to authorities having jurisdiction. Factory label insulation and jacket materials and adhesive, mastic, tapes, and cement material containers, with appropriate markings of applicable testing agency.
1. Insulation Installed Indoors: Flame-spread index of 25 or less, and smoke-developed index of 50 or less.
2. Insulation Installed Outdoors: Flame-spread index of 75 or less, and smoke-developed index of 150 or less.

C. Mockups: Before installing insulation, build mockups for each type of insulation and finish listed below to demonstrate quality of insulation application and finishes. Build mockups in the location indicated or, if not indicated, as directed by Architect. Use materials indicated for the completed Work.
1. Piping Mockups:
   a. One (1) 10-foot section of NPS 2 straight pipe.
   b. One (1) each of a 90-degree threaded, welded, and flanged elbow.
   c. One (1) each of a threaded, welded, and flanged tee fitting.
   d. One (1) NPS 2 or smaller valve, and one (1) NPS 2-1/2 or larger valve.
   e. Four support hangers including hanger shield and insert.
   f. One (1) threaded strainer and one (1) flanged strainer with removable portion of insulation.
   g. One (1) threaded reducer and one (1) welded reducer.
   h. One (1) pressure temperature tap.
   i. One (1) mechanical coupling.
2. For each mockup, fabricate cutaway sections to allow observation of application details for insulation materials, adhesives, mastics, attachments, and jackets.
3. Notify Architect seven days in advance of dates and times when mockups will be constructed.
4. Obtain Architect's approval of mockups before starting insulation application.
5. Approval of mockups does not constitute approval of deviations from the Contract Documents contained in mockups unless Architect specifically approves such deviations in writing.
6. Maintain mockups during construction in an undisturbed condition as a standard for judging the completed Work.
7. Demolish and remove mockups when directed.

D. Comply with the following applicable standards and other requirements specified for miscellaneous components:
   1. Supply and Drain Protective Shielding Guards: ICC A117.1.

1.6 DELIVERY, STORAGE AND HANDLING

A. Packaging: Insulation material containers shall be marked by manufacturer with appropriate ASTM standard designation, type and grade, and maximum use temperature.

1.7 COORDINATION

A. Coordinate sizes and locations of supports, hangers, and insulation shields specified in Section 22 05 29.

B. Coordinate clearance requirements with piping installer for piping insulation application. Before preparing piping shop drawings, establish and maintain clearance requirements for installation of insulation and field-applied jackets and finishes and for space required for maintenance.

C. Coordinate installation and testing of heat tracing.

1.8 SCHEDULING

A. Schedule insulation application after pressure testing systems and, where required, after installing and testing heat tracing. Insulation application may begin on segments that have satisfactory test results.

B. Complete installation and concealment of plastic materials as rapidly as possible in each area of construction.

PART 2 - PRODUCTS

2.1 INSULATION MATERIALS

A. Comply with requirements in "Piping Insulation Schedule, General," "Indoor Piping Insulation Schedule," "Outdoor, Aboveground Piping Insulation Schedule," and "Outdoor, Underground Piping Insulation Schedule" articles for where insulating materials shall be applied.

B. Products shall not contain asbestos, lead, mercury, or mercury compounds.

C. Products that come in contact with stainless steel shall have a leachable chloride content of less than 50 ppm when tested according to ASTM C871.

D. Insulation materials for use on austenitic stainless steel shall be qualified as acceptable according to ASTM C795.

E. Foam insulation materials shall not use CFC or HCFC blowing agents in the manufacturing process.

F. Flexible Elastomeric Insulation: Closed-cell, sponge- or expanded-rubber materials. Comply with ASTM C534, Type I for tubular materials.

1. Products: Subject to compliance with requirements, provide one (1) of the following available products that may be incorporated into the Work include, but are not limited to, the following:
   a. Aeroflex USA, Inc.; Aerocel.
   b. Armacell LLC; AP Armaflex.
   c. K-Flex USA; Insul-Lock, Insul-Tube, and K-FLEX LS.

G. Mineral-Fiber, Preformed Fiberglass Pipe Insulation:
1. Products: Subject to compliance with requirements, provide one (1) of the following available products that may be incorporated into the Work include, but are not limited to, the following:
   a. Johns Manville; Micro-Lok.
   b. Knauf Insulation; 1000-Degree Pipe Insulation.
   c. Manson Insulation Inc.; Alley-K.
   d. Owens Corning; Fiberglas Pipe Insulation.
2. Type I, 850 Degrees F Materials: Mineral or glass fibers bonded with a thermosetting resin. Comply with ASTM C547, Type I, Grade A, with factory applied ASJ. Factory-applied jacket requirements are specified in "Factory-Applied Jackets" article.

H. ASJ Adhesive, and FSK Jacket Adhesive: Comply with MILA-3316C, Class 2, Grade A for bonding insulation jacket lap seams and joints.
1. Products: Subject to compliance with requirements, provide one (1) of the following available products that may be incorporated into the Work include, but are not limited to, the following:
   a. Childers Brand, Specialty Construction Brands, Inc., a business of H. B. Fuller Company; CP-82.
   b. Eagle Bridges - Marathon Industries; 225.
   c. Foster Brand, Specialty Construction Brands, Inc., a business of H. B. Fuller Company; 85-20.
   d. Mon-Eco Industries, Inc.; 22-25.
2. For indoor applications, use adhesive that has a VOC content of 50 g/L or less when calculated according to 40 CFR 59, Subpart D (EPA Method 24).
3. Use adhesive that complies with the testing and product requirements of the California Department of Health Services' "Standard Practice for the Testing of Volatile Organic Emissions from Various Sources Using Small-Scale Environmental Chambers," including 2004 Addenda.

I. PVC Jacket Adhesive: Compatible with PVC jacket.
1. Products: Subject to compliance with requirements, provide one (1) of the following available products that may be incorporated into the Work include, but are not limited to, the following:
   a. Dow Corning Corporation; 739, Dow Silicone.
   b. Johns Manville; Zeston Perma-Weld, CEEL-TITE Solvent Welding Adhesive.
   c. P.I.C. Plastics, Inc.; Welding Adhesive.
   d. Speedline Corporation; Polyco VP Adhesive.
2. For indoor applications, use adhesive that has a VOC content of 50 g/L or less when calculated according to 40 CFR 59, Subpart D (EPA Method 24).
3. Use adhesive that complies with the testing and product requirements of the California Department of Health Services' "Standard Practice for the Testing of Volatile Organic Emissions from Various Sources Using Small-Scale Environmental Chambers," including 2004 Addenda.

2.2 LAGGING ADHESIVES

A. Description: Comply with MILA-3316C, Class I, Grade A, and shall be compatible with insulation materials, jackets, and substrates.
   1. For indoor applications, use lagging adhesives that have a VOC content of 50 g/L or less when calculated according to 40 CFR 59, Subpart D (EPA Method 24).
   2. Products: Subject to compliance with requirements, provide one (1) of the following] [available products that may be incorporated into the Work include, but are not limited to, the following:
      a. Childers Brand, Specialty Construction Brands, Inc., a business of H. B. Fuller Company; CP-50 AHV2.
      b. Foster Brand, Specialty Construction Brands, Inc., a business of H. B. Fuller Company; 30-36.
      c. Vimasco Corporation; 713 and 714.
   3. Fire-resistant, water-based lagging adhesive and coating for use indoors to adhere fire-resistant lagging cloths over pipe insulation.
   4. Service Temperature Range: 0 to plus 180 degrees F.
   5. Color: White.

2.3 SEALANTS

A. Joint Sealants:
   1. Joint Sealants for Cellular-Glass: Subject to compliance with requirements, provide one (1) of the following available products that may be incorporated into the Work include, but are not limited to, the following:
      a. Childers Brand, Specialty Construction Brands, Inc., a business of H. B. Fuller Company; CP-76.
      b. Eagle Bridges - Marathon Industries; 405.
      c. Foster Brand, Specialty Construction Brands, Inc., a business of H. B. Fuller Company; 30-45.
      d. Mon-Eco Industries, Inc.; 44-05.
      e. Pittsburgh Corning Corporation; Pittseal 444.
   2. Materials shall be compatible with insulation materials, jackets, and substrates.
   3. Permanently flexible, elastomeric sealant.
   4. Service Temperature Range: Minus 100 to plus 300 degrees F.
   5. Color: White or gray.
   6. For indoor applications, use sealants that have a VOC content of 420 g/L or less when calculated according to 40 CFR 59, Subpart D (EPA Method 24).
   7. Use sealants that comply with the testing and product requirements of the California Department of Health Services' "Standard Practice for the Testing of Volatile Organic Emissions from Various Sources Using Small-Scale Environmental Chambers," including 2004 Addenda.

B. FSK and Metal Jacket Flashing Sealants:
   1. Products: Subject to compliance with requirements, provide one (1) of the following available products that may be incorporated into the Work include, but are not limited to, the following:
      a. Childers Brand, Specialty Construction Brands, Inc., a business of H. B. Fuller Company; CP-76.
      b. Eagle Bridges - Marathon Industries; 405.
      c. Foster Brand, Specialty Construction Brands, Inc., a business of H. B. Fuller Company; 95-44.
      d. Mon-Eco Industries, Inc.; 44-05.
   2. Materials shall be compatible with insulation materials, jackets, and substrates.
   3. Fire- and water-resistant, flexible, elastomeric sealant.

4. Service Temperature Range: Minus 40 to plus 250 degrees F.
5. Color: Aluminum.
6. For indoor applications, use sealants that have a VOC content of 420 g/L or less when calculated according to 40 CFR 59, Subpart D (EPA Method 24).
7. Use sealants that comply with the testing and product requirements of the California Department of Health Services' "Standard Practice for the Testing of Volatile Organic Emissions from Various Sources Using Small-Scale Environmental Chambers," including 2004 Addenda.

C. ASJ Flashing Sealants, and PVC Jacket Flashing Sealants:
1. Products: Subject to compliance with requirements, provide one (1) of the following available products that may be incorporated into the Work include, but are not limited to, the following:
   a. Childers Brand, Specialty Construction Brands, Inc., a business of H. B. Fuller Company; CP-76.
2. Materials shall be compatible with insulation materials, jackets, and substrates.
3. Fire- and water-resistant, flexible, elastomeric sealant.
4. Service Temperature Range: Minus 40 to plus 250 degrees F.
5. Color: White.
6. For indoor applications, use sealants that have a VOC content of 420 g/L or less when calculated according to 40 CFR 59, Subpart D (EPA Method 24).
7. Use sealants that comply with the testing and product requirements of the California Department of Health Services' "Standard Practice for the Testing of Volatile Organic Emissions from Various Sources Using Small-Scale Environmental Chambers," including 2004 Addenda.

2.4 FACTORY-APPLIED JACKETS

A. Insulation system schedules indicate factory-applied jackets on various applications. When factory-applied jackets are indicated, comply with the following:
1. ASJ: White, kraft-paper, fiberglass-reinforced scrim with aluminum-foil backing; complying with ASTM C1136, Type I.
2. ASJ-SSL: ASJ with self-sealing, pressure-sensitive, acrylic-based adhesive covered by a removable protective strip; complying with ASTM C1136, Type I.
3. FSK Jacket: Aluminum-foil, fiberglass-reinforced scrim with kraft-paper backing; complying with ASTM C1136, Type II.

2.5 FIELD-APPLIED JACKETS

A. Field-applied jackets shall comply with ASTM C921, Type I, unless otherwise indicated.

B. PVC Jacket: High-impact-resistant, UV-resistant PVC complying with ASTM D1784, Class 16354-C; thickness as scheduled; roll stock ready for shop or field cutting and forming. Thickness is indicated in field-applied jacket schedules.
1. Products: Subject to compliance with requirements, provide one (1) of the following available products that may be incorporated into the Work include, but are not limited to, the following:
   a. Johns Manville; Zeston.
   b. P.I.C. Plastics, Inc.; FG Series.
   c. Proto Corporation; LoSmoke.
   d. Speedline Corporation; SmokeSafe.
2. Adhesive: As recommended by jacket material manufacturer.
3. Color: White.
4. Factory-fabricated fitting covers to match jacket if available; otherwise, field fabricate.

a. Shapes: 45- and 90-degree, short- and long-radius elbows, tees, valves, flanges, unions, reducers, end caps, soil-pipe hubs, traps, mechanical joints, and P-trap and supply covers for lavatories.

C. Metal Jacket:
1. Products: Subject to compliance with requirements, provide one (1) of the following available products that may be incorporated into the Work include, but are not limited to, the following:
   a. Childers Brand, Specialty Construction Brands, Inc., a business of H. B. Fuller Company; Metal Jacketing Systems.
   b. ITW Insulation Systems; Aluminum and Stainless Steel Jacketing.
   c. RPR Products, Inc.; Insul-Mate.
2. Aluminum Jacket: Comply with ASTM B209, Alloy 3003, 3005, 3105, or 5005, Temper H-14.
   a. Factory cut and rolled to size.
   b. Finish and thickness are indicated in field-applied jacket schedules.
   c. Moisture Barrier for Indoor Applications: 1-mil thick, heat-bonded polyethylene and kraft paper
   d. Moisture Barrier for Outdoor Applications: 3-mil thick, heat-bonded polyethylene and kraft paper.
   e. Factory-Fabricated Fitting Covers:
      1) Same material, finish, and thickness as jacket.
      2) Preformed 2-piece or gore, 45- and 90-degree, short- and long-radius elbows.
      3) Tee covers.
      4) Flange and union covers.
      5) End caps.
      6) Beveled collars.
      7) Valve covers.
      8) Field fabricate fitting covers only if factory-fabricated fitting covers are not available.
3. Stainless Steel Jacket: ASTM A167 or ASTM A240.
   a. Factory cut and rolled to size.
   b. Material, finish, and thickness are indicated in field-applied jacket schedules.
   c. Moisture Barrier for Indoor Applications: 1-mil thick, heat-bonded polyethylene and kraft paper.
   d. Moisture Barrier for Outdoor Applications: 3-mil thick, heat-bonded polyethylene and kraft paper.
   e. Factory-Fabricated Fitting Covers:
      1) Same material, finish, and thickness as jacket.
      2) Preformed 2-piece or gore, 45- and 90-degree, short- and long-radius elbows.
      3) Tee covers.
      4) Flange and union covers.
      5) End caps.
      6) Beveled collars.
      7) Valve covers.
      8) Field fabricate fitting covers only if factory-fabricated fitting covers are not available.

D. Underground Direct-Buried Jacket: 125-mil thick vapor barrier and waterproofing membrane consisting of a rubberized bituminous resin reinforced with a woven-glass fiber or polyester scrim and laminated aluminum foil.
1. Products: Subject to compliance with requirements provide one (1) of the following available products that may be incorporated into the Work include, but are not limited to, the following:

a. Pittsburgh Corning Corporation; Pittwrap.
b. Polyguard Products, Inc.; Insulrap No Torch 125.

2.6 TAPES

A. ASJ Tape: White vapor-retarder tape matching factory-applied jacket with acrylic adhesive, complying with ASTM C1136.
1. Products: Subject to compliance with requirements, provide one (1) of the following available products that may be incorporated into the Work include, but are not limited to, the following:
a. ABI, Ideal Tape Division; 428 AWF ASJ.
b. Avery Dennison Corporation, Specialty Tapes Division; Fasson 0836.
c. Compac Corporation; 104 and 105.
d. Venture Tape; 1540 CW Plus, 1542 CW Plus, and 1542 CW Plus/SQ.
2. Width: Three (3) inches.
3. Thickness: 11.5 mils.
4. Adhesion: 90 ounces force/inch in width.
5. Elongation: Two (2) percent.
6. Tensile Strength: 40-lbf/inch in width.
7. ASJ Tape Disks and Squares: Precut disks or squares of ASJ tape.

B. FSK Tape: Foil-face, vapor-retarder tape matching factory-applied jacket with acrylic adhesive; complying with ASTM C1136.
1. Products: Subject to compliance with requirements, provide one (1) of the following available products that may be incorporated into the Work include, but are not limited to, the following:
a. ABI, Ideal Tape Division; 491 AWF FSK.
b. Avery Dennison Corporation, Specialty Tapes Division; Fasson 0827.
c. Compac Corporation; 110 and 111.
d. Venture Tape; 1525 CW NT, 1528 CW, and 1528 CW/SQ.
2. Width: Three (3) inches.
3. Thickness: 6.5 mils.
4. Adhesion: 90 ounces force/inch in width.
5. Elongation: Two (2) percent.
6. Tensile Strength: 40-lbf/inch in width.
7. FSK Tape Disks and Squares: Precut disks or squares of FSK tape.

C. Aluminum-Foil Tape: Vapor-retarder tape with acrylic adhesive.
1. Products: Subject to compliance with requirements, provide one (1) of the following available products that may be incorporated into the Work include, but are not limited to, the following:
a. ABI, Ideal Tape Division; 488 AWF.
b. Avery Dennison Corporation, Specialty Tapes Division; Fasson 0800.
c. Compac Corporation; 120.
d. Venture Tape; 3520 CW.
2. Width: Two (2) inches.
3. Thickness: 3.7 mils.
4. Adhesion: 100 ounces force/inch in width.
5. Elongation: Five (5) percent.
6. Tensile Strength: 34-lbf/inch in width.

2.7 SECUREMENTS

A. Bands:

1. Products: Subject to compliance with requirements, provide one (1) of the following available products that may be incorporated into the Work include, but are not limited to, the following:
   a. ITW Insulation Systems; Gerrard Strapping and Seals.
   b. RPR Products, Inc.; Insul-Mate Strapping and Seals.
2. Stainless Steel: ASTM A167 or ASTM A240, Type 304; 0.015-inch thick, wide with wing seal.
3. Aluminum: ASTM B209, Alloy 3003, 3005, 3105, or 5005; Temper H-14, 0.020-inch thick wing seal.

B. Staples: Outward-clinching insulation staples, nominal 3/4-inch wide, stainless steel or Monel.

2.8 PROTECTIVE SHIELDING GUARDS

A. Protective Shielding Pipe Covers:
1. Manufacturers: Subject to compliance with requirements, provide products by one (1) of the following available manufacturers offering products that may be incorporated into the Work include, but are not limited to, the following:
   a. Engineered Brass Company.
   b. Insul-Tect Products Co.; a subsidiary of MVG Molded Products.
   c. McGuire Manufacturing.
   d. Plumberex.
   e. Truebro; a brand of IPS Corporation.
   f. Zurn Industries, LLC; Tubular Brass Plumbing Products Operation.
2. Description: Manufactured plastic wraps for covering plumbing fixture hot- and cold-water supplies and trap and drain piping. Comply with Americans with Disabilities Act (ADA) requirements.

B. Protective Shielding Piping Enclosures:
1. Manufacturers: Subject to compliance with requirements, provide products by one (1) of the following available manufacturers offering products that may be incorporated into the Work include, but are not limited to, the following:
   a. Truebro; a brand of IPS Corporation.
   b. Zurn Industries, LLC; Tubular Brass Plumbing Products Operation.
2. Description: Manufactured plastic enclosure for covering plumbing fixture hot- and cold-water supplies and trap and drain piping. Comply with ADA requirements.

PART 3 - EXECUTION

3.1 EXAMINATION

A. Examine substrates and conditions for compliance with requirements for installation tolerances and other conditions affecting performance of insulation application.
1. Verify that systems to be insulated have been tested and are free of defects.
2. Verify that surfaces to be insulated are clean and dry.

B. Proceed with installation only after unsatisfactory conditions have been corrected.

3.2 PREPARATION

A. Surface Preparation: Clean and dry surfaces to receive insulation. Remove materials that will adversely affect insulation application.

B. Surface Preparation: Clean and prepare surfaces to be insulated. Before insulating, apply a corrosion coating to insulated surfaces as follows:
   1. Stainless Steel: Coat 300 series stainless steel with an epoxy primer five (5) mils thick and an epoxy finish five (5) mils thick if operating in a temperature range between 140 and 300 degrees F. Consult coating manufacturer for appropriate coating materials and application methods for operating temperature range.
   2. Carbon Steel: Coat carbon steel operating at a service temperature between 32 and 300 degrees F with an epoxy coating. Consult coating manufacturer for appropriate coating materials and application methods for operating temperature range.

C. Coordinate insulation installation with the trade installing heat tracing. Comply with requirements for heat tracing that apply to insulation.

D. Mix insulating cements with clean potable water; if insulating cements are to be in contact with stainless-steel surfaces, use demineralized water.

3.3 GENERAL INSTALLATION REQUIREMENTS

A. Install insulation materials, accessories, and finishes with smooth, straight, and even surfaces; free of voids throughout the length of piping including fittings, valves, and specialties.

B. Install insulation materials, forms, vapor barriers or retarders, jackets, and thicknesses required for each item of pipe system as specified in insulation system schedules.

C. Install accessories compatible with insulation materials and suitable for the service. Install accessories that do not corrode, soften, or otherwise attack insulation or jacket in either wet or dry state.

D. Install insulation with longitudinal seams at top and bottom of horizontal runs.

E. Install multiple layers of insulation with longitudinal and end seams staggered.

F. Do not weld brackets, clips, or other attachment devices to piping, fittings, and specialties.

G. Keep insulation materials dry during application and finishing.

H. Install insulation with tight longitudinal seams and end joints. Bond seams and joints with adhesive recommended by insulation material manufacturer.

I. Install insulation with least number of joints practical.

J. Where vapor barrier is indicated, seal joints, seams, and penetrations in insulation at hangers, supports, anchors, and other projections with vapor-barrier mastic.
   1. Install insulation continuously through hangers and around anchor attachments.
   2. For insulation application where vapor barriers are indicated, extend insulation on anchor legs from point of attachment to supported item to point of attachment to structure. Taper and seal ends at attachment to structure with vapor-barrier mastic.

3. Install insert materials and install insulation to tightly join the insert. Seal insulation to insulation inserts with adhesive or sealing compound recommended by insulation material manufacturer.
4. Cover inserts with jacket material matching adjacent pipe insulation. Install shields over jacket, arranged to protect jacket from tear or puncture by hanger, support, and shield.

K. Apply adhesives, mastics, and sealants at manufacturer's recommended coverage rate and wet and dry film thicknesses.

L. Install insulation with factory-applied jackets as follows:
1. Draw jacket tight and smooth.
2. Cover circumferential joints with 3-inch wide strips, of same material as insulation jacket. Secure strips with adhesive and outward clinching staples along both edges of strip, spaced four (4) inches o.c.
3. Overlap jacket longitudinal seams at least 1-1/2 inches. Install insulation with longitudinal seams at bottom of pipe. Clean and dry surface to receive self-sealing lap. Staple laps with outward clinching staples along edge at two (2) inches o.c.
   a. For below-ambient services, apply vapor-barrier mastic over staples.
4. Cover joints and seams with tape, according to insulation material manufacturer's written instructions, to maintain vapor seal.
5. Where vapor barriers are indicated, apply vapor-barrier mastic on seams and joints and at ends adjacent to pipe flanges and fittings.

M. Cut insulation in a manner to avoid compressing insulation more than 75 percent of its nominal thickness.

N. Finish installation with systems at operating conditions. Repair joint separations and cracking due to thermal movement.

O. Repair damaged insulation facings by applying same facing material over damaged areas. Extend patches at least four (4) inches beyond damaged areas. Adhere, staple, and seal patches similar to butt joints.

P. For above-ambient services, do not install insulation to the following:
1. Vibration-control devices.
2. Testing agency labels and stamps.
3. Nameplates and data plates.
4. Cleanouts.

3.4 PENETRATIONS

A. Insulation Installation at Roof Penetrations: Install insulation continuously through roof penetrations.
1. Seal penetrations with flashing sealant.
2. For applications requiring only indoor insulation, terminate insulation above roof surface and seal with joint sealant. For applications requiring indoor and outdoor insulation, install insulation for outdoor applications tightly joined to indoor insulation ends. Seal joint with joint sealant.
3. Extend jacket of outdoor insulation outside roof flashing at least two (2) inches below top of roof flashing.
4. Seal jacket to roof flashing with flashing sealant.

B. Insulation Installation at Underground Exterior Wall Penetrations: Terminate insulation flush with sleeve seal. Seal terminations with flashing sealant.

C. Insulation Installation at Aboveground Exterior Wall Penetrations: Install insulation continuously through wall penetrations.
   1. Seal penetrations with flashing sealant.
   2. For applications requiring only indoor insulation, terminate insulation inside wall surface and seal with joint sealant. For applications requiring indoor and outdoor insulation, install insulation for outdoor applications tightly joined to indoor insulation ends. Seal joint with joint sealant.
   3. Extend jacket of outdoor insulation outside wall flashing and overlap wall flashing at least two (2) inches.
   4. Seal jacket to wall flashing with flashing sealant.

D. Insulation Installation at Interior Wall and Partition Penetrations (That Are Not Fire Rated): Install insulation continuously through walls and partitions.

E. Insulation Installation at Fire-Rated Wall and Partition Penetrations: Install insulation continuously through penetrations of fire-rated walls and partitions.
   1. Comply with requirements in Section 07 84 13 for firestopping and fire-resistive joint sealers.

F. Insulation Installation at Floor Penetrations:
   1. Pipe: Install insulation continuously through floor penetrations.
   2. Seal penetrations through fire-rated assemblies. Comply with requirements in Section 07 84 13.

3.5 GENERAL PIPE INSULATION INSTALLATION

A. Requirements in this article generally apply to all insulation materials except where more specific requirements are specified in various pipe insulation material installation articles.

B. Insulation Installation on Fittings, Valves, Strainers, Flanges, and Unions:
   1. Install insulation over fittings, valves, strainers, flanges, unions, and other specialties with continuous thermal and vapor-retarder integrity unless otherwise indicated.
   2. Insulate pipe elbows using preformed fitting insulation or mitered fittings made from same material and density as adjacent pipe insulation. Each piece shall be butted tightly against adjoining piece and bonded with adhesive. Fill joints, seams, voids, and irregular surfaces with insulating cement finished to a smooth, hard, and uniform contour that is uniform with adjoining pipe insulation.
   3. Insulate tee fittings with preformed fitting insulation or sectional pipe insulation of same material and thickness as used for adjacent pipe. Cut sectional pipe insulation to fit. Butt each section closely to the next and hold in place with tie wire. Bond pieces with adhesive.
   4. Insulate valves using preformed fitting insulation or sectional pipe insulation of same material, density, and thickness as used for adjacent pipe. Overlap adjoining pipe insulation by not less than two (2) times the thickness of pipe insulation, or one (1) pipe diameter, whichever is thicker. For valves, insulate up to and including the bonnets, valve stuffing-box studs, bolts, and nuts. Fill joints, seams, and irregular surfaces with insulating cement.
   5. Insulate strainers using preformed fitting insulation or sectional pipe insulation of same material, density, and thickness as used for adjacent pipe. Overlap adjoining pipe insulation by not less than two (2) times the thickness of pipe insulation, or one (1) pipe diameter, whichever is thicker. Fill joints, seams, and irregular surfaces with insulating cement. Insulate strainers so strainer basket flange or plug can be easily removed and replaced without damaging the insulation and jacket. Provide a removable reusable insulation cover. For below-ambient services, provide a design that maintains vapor barrier.

6. Insulate flanges and unions using a section of oversized preformed pipe insulation. Overlap adjoining pipe insulation by not less than two (2) times the thickness of pipe insulation, or one (1) pipe diameter, whichever is thicker.
7. Cover segmented insulated surfaces with a layer of finishing cement and coat with a mastic. Install vapor-barrier mastic for below-ambient services and a breather mastic for above-ambient services. Reinforce the mastic with fabric-reinforcing mesh. Trowel the mastic to a smooth and well-shaped contour.
8. For services not specified to receive a field-applied jacket except for flexible elastomeric and polyolefin, install fitted PVC cover over elbows, tees, strainers, valves, flanges, and unions. Terminate ends with PVC end caps. Tape PVC covers to adjoining insulation facing using PVC tape.
9. Stencil or label the outside insulation jacket of each union with the word "union." Match size and color of pipe labels.

C. Insulate instrument connections for thermometers, pressure gages, pressure temperature taps, test connections, flow meters, sensors, switches, and transmitters on insulated pipes. Shape insulation at these connections by tapering it to and around the connection with insulating cement and finish with finishing cement, mastic, and flashing sealant.

D. Install removable insulation covers at locations indicated. Installation shall conform to the following:
1. Make removable flange and union insulation from sectional pipe insulation of same thickness as that on adjoining pipe. Install same insulation jacket as adjoining pipe insulation.
2. When flange and union covers are made from sectional pipe insulation, extend insulation from flanges or union long at least two (2) times the insulation thickness over adjacent pipe insulation on each side of flange or union. Secure flange cover in place with stainless-steel or aluminum bands. Select band material compatible with insulation and jacket.
3. Construct removable valve insulation covers in same manner as for flanges, except divide the two-part section on the vertical center line of valve body.
4. When covers are made from block insulation, make two (2) halves, each consisting of mitered blocks wired to stainless-steel fabric. Secure this wire frame, with its attached insulation, to flanges with tie wire. Extend insulation at least 2 inches over adjacent pipe insulation on each side of valve. Fill space between flange or union cover and pipe insulation with insulating cement. Finish cover assembly with insulating cement applied in two (2) coats. After first coat is dry, apply and trowel second coat to a smooth finish.
5. Unless a PVC jacket is indicated in field-applied jacket schedules, finish exposed surfaces with a metal jacket.

3.6 INSTALLATION OF CELLULAR-GLASS INSULATION

A. Insulation Installation on Straight Pipes and Tubes:
1. Secure each layer of insulation to pipe with wire or bands and tighten bands without deforming insulation materials.
2. Where vapor barriers are indicated, seal longitudinal seams, end joints, and protrusions with vapor-barrier mastic and joint sealant.
3. For insulation with factory-applied jackets on above-ambient services, secure laps with outward clinched staples at 6 inches o.c.
4. For insulation with factory-applied jackets on below-ambient services, do not staple longitudinal tabs. Instead, secure tabs with additional adhesive as recommended by insulation material manufacturer and seal with vapor-barrier mastic and flashing sealant.

B. Insulation Installation on Pipe Flanges:
1. Install preformed pipe insulation to outer diameter of pipe flange.

2. Make width of insulation section same as overall width of flange and bolts, plus twice the thickness of pipe insulation.
3. Fill voids between inner circumference of flange insulation and outer circumference of adjacent straight pipe segments with cut sections of cellular-glass block insulation of same thickness as pipe insulation.
4. Install jacket material with manufacturer's recommended adhesive, overlap seams at least 1 inch, and seal joints with flashing sealant.

C. Insulation Installation on Pipe Fittings and Elbows:
1. Install preformed sections of same material as straight segments of pipe insulation when available. Secure according to manufacturer's written instructions.
2. When preformed sections of insulation are not available, install mitered sections of cellular-glass insulation. Secure insulation materials with wire or bands.

D. Insulation Installation on Valves and Pipe Specialties:
1. Install preformed sections of cellular-glass insulation to valve body.
2. Arrange insulation to permit access to packing and to allow valve operation without disturbing insulation.
3. Install insulation to flanges as specified for flange insulation application.

3.7 INSTALLATION OF FLEXIBLE ELASTOMERIC INSULATION

A. Seal longitudinal seams and end joints with manufacturer's recommended adhesive to eliminate openings in insulation that allow passage of air to surface being insulated.

B. Insulation Installation on Pipe Flanges:
1. Install pipe insulation to outer diameter of pipe flange.
2. Make width of insulation section same as overall width of flange and bolts, plus twice the thickness of pipe insulation.
3. Fill voids between inner circumference of flange insulation and outer circumference of adjacent straight pipe segments with cut sections of sheet insulation of same thickness as pipe insulation.
4. Secure insulation to flanges and seal seams with manufacturer's recommended adhesive to eliminate openings in insulation that allow passage of air to surface being insulated.

C. Insulation Installation on Pipe Fittings and Elbows:
1. Install mitered sections of pipe insulation.
2. Secure insulation materials and seal seams with manufacturer's recommended adhesive to eliminate openings in insulation that allow passage of air to surface being insulated.

D. Insulation Installation on Valves and Pipe Specialties:
1. Install preformed valve covers manufactured of same material as pipe insulation when available.
2. When preformed valve covers are not available, install cut sections of pipe and sheet insulation to valve body. Arrange insulation to permit access to packing and to allow valve operation without disturbing insulation.
3. Install insulation to flanges as specified for flange insulation application.
4. Secure insulation to valves and specialties and seal seams with manufacturer's recommended adhesive to eliminate openings in insulation that allow passage of air to surface being insulated.

3.8 FIELD-APPLIED JACKET INSTALLATION

A. Where glass-cloth jackets are indicated, install directly over bare insulation or insulation with factory-applied jackets.
   1. Draw jacket smooth and tight to surface with 2-inch overlap at seams and joints.
   2. Embed glass cloth between two (2) 0.062-inch thick coats of lagging adhesive.
   3. Completely encapsulate insulation with coating, leaving no exposed insulation.

B. Where FSK jackets are indicated, install as follows:
   1. Draw jacket material smooth and tight.
   2. Install lap or joint strips with same material as jacket.
   3. Secure jacket to insulation with manufacturer's recommended adhesive.
   4. Install jacket with 1-1/2-inch laps at longitudinal seams and 3-inch wide joint strips at end joints.
   5. Seal openings, punctures, and breaks in vapor-retarder jackets and exposed insulation with vapor-barrier mastic.

C. Where PVC jackets are indicated, install with 1-inch overlap at longitudinal seams and end joints. Seal with manufacturer's recommended adhesive.
   1. Apply two (2) continuous beads of adhesive to seams and joints, one (1) bead under lap and the finish bead along seam and joint edge.

D. Where metal jackets are indicated, install with 2-inch overlap at longitudinal seams and end joints. Overlap longitudinal seams arranged to shed water. Seal end joints with weatherproof sealant recommended by insulation manufacturer. Secure jacket with stainless-steel bands 12 inches o.c. and at end joints.

3.9 FINISHES

A. Insulation with ASJ, Glass-Cloth, or Other Paintable Jacket Material: Paint jacket with paint system identified below and as specified in Division 09 painting sections.
   1. Flat Acrylic Finish: Two (2) finish coats over a primer that is compatible with jacket material and finish coat paint. Add fungicidal agent to render fabric mildew proof.
      a. Finish Coat Material: Interior, flat, latex-emulsion size.

B. Flexible Elastomeric Thermal Insulation: After adhesive has fully cured, apply two (2) coats of insulation manufacturer's recommended protective coating.

C. Color: Final color as selected by Architect. Vary first and second coats to allow visual inspection of the completed Work.

D. Do not field paint aluminum or stainless-steel jackets.

3.10 FIELD QUALITY CONTROL

A. Testing Agency: Engage a qualified testing agency to perform tests and inspections.

B. Perform tests and inspections.

C. Tests and Inspections:
   1. Inspect pipe, fittings, strainers, and valves, randomly selected by Architect, by removing field-applied jacket and insulation in layers in reverse order of their installation. Extent of inspection shall be limited to [three (3) locations of straight pipe, three (3) locations of

threaded fittings, three (3) locations of welded fittings, two (2) locations of threaded strainers, two (2) locations of welded strainers, [three (3) locations of threaded valves, and [three (3) Insert number locations of flanged valves for each pipe service defined in the "Piping Insulation Schedule, General" article.

D. All insulation applications will be considered defective Work if sample inspection reveals noncompliance with requirements.

3.11 PIPING INSULATION SCHEDULE, GENERAL

A. Acceptable preformed pipe and tubular insulation materials and thicknesses are identified for each piping system and pipe size range. If more than one (1) material is listed for a piping system, selection from materials listed is Contractor's option.

B. Items Not Insulated: Unless otherwise indicated, do not install insulation on the following:
1. Drainage piping located in crawl spaces.
2. Underground piping.
3. Chrome-plated pipes and fittings unless there is a potential for personnel injury.

3.12 INDOOR PIPING INSULATION SCHEDULE

A. Domestic Cold Water:
1. NPS 1 and Smaller: Insulation shall be one (1) of the following:
   a. Cellular Glass: 1-1/2 inches thick.
   b. Flexible Elastomeric: 1/2-inch thick.
2. NPS 1-1/4 and Larger: Insulation shall be one (1) of the following:
   a. Cellular Glass: 1-1/2 inches thick.
   b. Flexible Elastomeric: One (1) inch thick.

B. Domestic Hot and Recirculated Hot Water:
1. NPS 1-1/4 and Smaller: Insulation shall be [one (1) of] the following:
   a. Cellular Glass: 1-1/2 inches thick.
   b. Flexible Elastomeric: One (1) inch thick.
2. NPS 1-1/2 and Larger: Insulation shall be one (1) of the following:
   a. Cellular Glass: 1-1/2 inches thick.
   b. Flexible Elastomeric: One (1) inch thick.

C. Stormwater and Overflow:
1. All Pipe Sizes: Insulation shall be one (1) of the following:
   a. Cellular Glass: 1-1/2 inches thick.
   b. Flexible Elastomeric: One (1) inch thick.

D. Roof Drain and Overflow Drain Bodies:
1. All Pipe Sizes: Insulation shall be one (1) of the following:
   a. Cellular Glass: 1-1/2 inches thick.
   b. Flexible Elastomeric: One (1) inch thick.

E. Exposed Sanitary Drains, Domestic Water, Domestic Hot Water, and Stops for Plumbing Fixtures for People with Disabilities:
1. All Pipe Sizes: Insulation shall be one (1) of the following:
   a. Flexible Elastomeric: One (1) inch thick.

F. Sanitary Waste Piping Where Heat Tracing Is Installed:

1. All Pipe Sizes: Insulation shall be one (1) of the following:
   a. Cellular Glass: Two (2) inches thick.

3.13 INDOOR, FIELD-APPLIED JACKET SCHEDULE

A. Install jacket over insulation material. For insulation with factory-applied jacket, install the field-applied jacket over the factory-applied jacket.

B. If more than one (1) material is listed, selection from materials listed is Contractor's option.

C. Piping, Concealed:
   1. None.

D. Piping, Exposed:
   1.
   2. PVC: 20 mils thick.

END OF SECTION 22 07 19

SECTION 22 08 00 - COMMISSIONING OF PLUMBING

PART 1 - GENERAL

1.1 SECTION INCLUDES

A. This section presents specific commissioning requirements for the Pawtucket Central Falls New Passenger Facilities Building project to be met in addition to other commissioning requirements, including but not limited to Section 01 91 13 “General Commissioning Requirements.”

1.2 RELATED COMMISSIONING SECTIONS

A. Section 01 91 13 General Commissioning Requirements

B. Section 23 08 00 Commissioning of HVAC and Controls

1.3 ABBREVIATIONS

A. See Section 01 91 13 for abbreviations and definitions.

1.4 CONTRACTOR REQUIREMENTS

A. Meet all the requirements of Section 01 91 13 “General Commissioning Requirements.”

B. Provide factory start-up and required technical personnel for participation in Owner’s Commissioning.

C. Construction and Acceptance Phase

1. Provide submittal data, commissioning documentation, O&M data and training related to Commissioning, including information from equipment suppliers.
2. Attend meetings necessary to facilitate the Commissioning process (refer to Section 01 91 13 and PART 3 of this specification for more information on meetings).
3. Review the commissioning Issues Log for items related to contracted work and assist the commissioning team in addressing and resolving these issues.
4. Complete commissioning checklists provided by Stephen Turner Inc. and return completed checklists to the Construction Manager. Startup checklists may require specific input from the Equipment Supplier such as a copy of the Manufacturer’s Startup Checklist.
5. Address any available Design Professional punch list items before final commissioning testing.
6. Install a P/T plug at each water sensor that is an input point to the plumbing control system.
7. Complete Plumbing TAB with discrepancies and problems remedied before commissioning testing of the respective systems.
8. Execute commissioning tests, which will be developed and led by Stephen Turner Inc. Testing will start at the components level, will proceed to the system level, and will end with inter-system testing.
9. Correct deficiencies (differences between specified and observed performance) as interpreted by Stephen Turner Inc., the Owner, and Design Professional and retest the equipment.
10. Provide training of the Owner’s operating staff, as required in PART 3 of this specification and elsewhere in the Contract Documents.

11. Assist and cooperate with Stephen Turner Inc. Provide skilled technicians familiar with this building to assist with commissioning testing.

D. Warranty Period

1. Execute seasonal or deferred commissioning testing, witnessed by Stephen Turner Inc. Correct deficiencies and make necessary adjustments to O&M manuals and as-built drawings for applicable issues identified in any seasonal testing.

1.5 INCLUDED SYSTEMS

A. For the following systems and components, Stephen Turner Inc. will develop Functional Performance Tests (FPTs) that are executed by the Trades with Stephen Turner Inc., as indicated.

Building Systems to be Commissioned	Pre-Functional Checklists	Functional Performance Testing
Plumbing Systems		
Domestic Hot Water	Yes	100%

B. The work provided under this Division that is listed above is included in the scope of the Commissioning activities to meet the Owner's goals.

C. In addition to component and systems level commissioning of the work listed, participation in inter-system testing and integrated commissioning of inter-related work is required. For list of all commissioned work see Section 01 91 13 "General Commissioning Requirements."

PART 2 - PRODUCTS

2.1 P/T PLUGS

A. 1/4" & 1/2" NPT Pressure/Temperature Test Plugs & Caps:

1. P/T plugs shall have a self-sealing pierce-able rubber core that is rated at 1000 PSI and 275°F.
2. Pressure/Temperature test plugs shall be provided at each pressure or temperature sensor on hot water systems where other means do not exist for temporary pressure and temperature measurement access without disturbing the process.

PART 3 - EXECUTION

3.1 COMMISSIONING TEAM PARTICIPATION

A. Each trade including all Sub-contractors, Tier Contractors, manufacturers' start-up personnel, as well as direct Equipment Suppliers shall designate personnel to be responsible for coordinating commissioning activities with the Commissioning Authority as required in Section 01 91 13 "General Commissioning Requirements."

3.2 CONTRACTOR RESPONSIBILITIES

A. Execution requirements for the following are in Section 01 91 13 "General Commissioning Requirements" with additional specific requirements for this Division stated below.

3.3 COMMISSIONING MEETINGS

A. Additional requirements for this Division:

1. Attendance is required by at least one (1) representative from the Contractor(s) for the systems being commissioned during delivery, installation, and start-up, and when checklists and tests are being performed.
2. As specific issues arise, a representative from each direct equipment supplier, and each supplier of other equipment not adequately represented by technical personnel from the responsible Contractor will be required to attend the meeting to assist in resolution.

3.4 SUBMITTALS

A. Additional requirements for this Division:

1. The Plumbing Contractor's Submittals shall include Sequences of Operations demonstrating that the control design and application incorporate the requirements provided by the Design Professional within the contract documents into a fully functional system. The controls submittals shall document Step-by-Step Control sequences for each controlled device, for each mode of operation, and for each possible transition from one mode to another.
2. Sequences documented in the submittals shall include all custom and standard sequence elements including but not limited to:
   a. Start-up sequences
   b. Shutdown sequences
   c. Emergency or stand-by power sequences where applicable, including effects of power or equipment failure and all stand-by functions
   d. Effects of equipment failure
   e. Sequences for all alarms and emergency shut-downs including annunciation and notification sequences
   f. Initial and recommended values for all adjustable settings, setpoints, and parameters that are typically set or adjusted by operating staff
   g. Schedules, if known
   h. All interlocks, interfaces, and interactions with other systems including controls systems provided by others.
   i. Detailed delineation of control interface for any packaged equipment controls, listing all controllable or adjustable points and all monitoring points.
   j. Written sequences of control for packaged controlled equipment, including additional clarifying narrative for equipment manufacturers' stock sequences.
   k. The Plumbing TAB Contractor shall submit a project-specific TAB Plan four weeks prior to starting TAB work. The Plan shall address each system and component, and shall include but not be limited to:
      1) Field reporting forms that list each piece of equipment and show the data to be gathered for each.
      2) Final test report forms.
      3) Detailed procedures for TAB work for each system.
      4) Specific procedures to ensure Domestic Hot Water system operates at the lowest energy use and the methods to verify and document this.
      5) Phasing plan for performing TAB work by floor or area.

l. Submittals shall be marked to show exact items, sizes, components, electrical characteristics, operating characteristics, details required for this project, service clearances, and shall be annotated to match drawing schedules.

m. Include ranges for all thermometers, pressure gages and other measuring devices.

n. Provide performance data including range, accuracy, data storage, local read-out, and data connections for each meter type submitted.

o. Provide performance curves (full and part-load as applicable) for each pump submitted.

p. Provide Manufacturers' detailed installation requirements clearly marked (arrow, underline, circled, etc.) to indicate exactly the intended item.

q. Provide Manufacturers' detailed start-up requirements and procedures clearly marked (arrow, underline, circled, etc.) to indicate exactly the intended item.

r. Provide Manufacturers' operating instructions clearly marked (arrow, underline, circled, etc.) to exactly indicate the intended item.

s. Provide Manufacturers' recommended maintenance and troubleshooting procedures clearly marked (arrow, underline, circled, etc.) to exactly indicate the intended item.

t. Provide Warranty and clear statement of Owner's obligations to maintain equipment to preserve warranty.

3.5 PRE-FUNCTIONAL CHECKLISTS

A. No Additional requirements for this Division.

3.6 O&M MANUALS

A. No additional requirements for this Division.

3.7 EQUIPMENT START-UP

A. Additional requirements for this Division:

1. For all commissioned systems and equipment, one copy of the equipment manufacturer's or Contractor's start-up report shall be provided to Stephen Turner Inc. for review and to document that the equipment is installed, operational, and ready for commissioning testing.
2. Copies of additional testing performed including but not limited to leak tests required elsewhere in the specifications shall be provided to Stephen Turner Inc.

3.8 COMMISSIONING TESTING

A. Additional requirements for this Division:

1. Each direct equipment supplier, and each supplier of other equipment not adequately represented by technical personnel from the responsible Contractor shall assist the installing contractor in commissioning testing.
2. The Contractor shall assist and cooperate with the Stephen Turner Inc. Skilled technicians familiar with this project shall execute the functional performance testing of the controls system, and shall assist in the functional performance testing of systems and equipment, including systems with interlocks, interfaces, or other interaction with other systems.

B. Additional Requirements for Testing Specified Elsewhere:

1. This includes the following tests:

a. Piping Pressure Testing.

b. Natural Gas Piping Pressure Testing.

2. Additional requirements for each of these tests:

a. The Construction Manager (CM) shall provide a copy of the proposed test procedure to Stephen Turner Inc. for review.

b. The CM shall notify the Design Professional and Stephen Turner Inc. of the date and time the test is scheduled.

c. The CM shall provide copies of field and final test results to Stephen Turner Inc.

d. Stephen Turner Inc. will review the test results for consistency with the Owner's Project Requirements.

3. Stephen Turner Inc. will provide all commissioning team members (contractors, Design Professional, Owner, etc.), and others as required, the commissioning test procedures prior to scheduled testing. If no comments are received from a particular commissioning team member, that shall constitute acceptance of the commissioning test procedures as is.

a. Once all commissioning checklists have been completed by the Contractor and accepted by Stephen Turner Inc., testing will be scheduled and performed.

4. Initial Testing

a. The systems shall be sufficiently operational prior to the TAB of the system. It is understood that a portion of the final system startup occurs in conjunction with the TAB work.

b. Commissioning verification of sensors will be made using the sampling method; an exhaustive re-test of all control system inputs and outputs will not be conducted by Stephen Turner Inc. Prior to Stephen Turner Inc. verification, the control contractor shall be responsible for complete input/output checkout quality assurance.

c. Sensor Tolerances. The following are the tolerances of the actual sensors in the system. Unless noted differently on the commissioning test procedure, use the following:

1) Temperature: +/- 2.0 deg. F

2) Pressure: +/- 5.0 % of reading

3) Flow rates for water: +/- 5.0 % of reading

d. Valve Stroke Setup and Check

1) For all valve actuator positions, verify the actual position against the control signal.

2) Set pumps to normal operating mode. Command valve closed, visually verify that valve is closed and adjust output zero signal as required. Command valve open, verify position is full open and adjust output signal as required. Command valve to at ;east one intermediate position. If actual valve or damper position doesn't reasonably correspond, repair or replace actuator.

3) Closure for normally closed valves: Disconnect power to the actuator motor, and verify the valve moves to full closed position. Restore to normal.

4) Normally open valves: disconnect power to the actuator motor, and verify the valve moves to full open position. Restore to normal.

e. Stephen Turner Inc. will witness the Initial tests. Each contractor will be responsible, as required, to put the system in various modes of operation, to fix minor problems found during the test (i.e. problems that can be fixed without delaying the completion of the test), and to witness the testing. Where Stephen

Turner Inc. develops a procedure for the test, the contractor shall implement the test to the satisfaction of Stephen Turner Inc.

5. Intermediate Testing
   a. The Plumbing TAB contractor shall, upon request by Stephen Turner Inc. if necessary during system troubleshooting, provide Stephen Turner Inc. with the technician(s) who accomplished the TAB, along with the specific equipment used for the TAB, to verify and re-test between 10% and 20% of the TAB final report.
   b. Included in this work will be:
      1) Sample-based verification of measured quantities
      2) Review of firm qualifications
      3) Review of instrument calibration records
      4) Review of basic procedures. Particular emphasis will be placed on the use of iterative methods (repeat measurements) acknowledging the fact that changes in branch flows have an overall system effect.
   c. The TAB Contractor shall provide the field reports or draft TAB reports to Stephen Turner Inc. within one week of completion for each system or area, before functional performance testing.
   d. The TAB Contractor shall make skilled technicians and instruments used during TAB available to address functional performance test results that are at variance with TAB reports.
6. System Level Testing
   a. Additional commissioning testing will be conducted after testing of the control system and TAB work. This testing will provide both the owner and Contractor with documentation that the system operated correctly according to the Owner's Project Requirements.
   b. Stephen Turner Inc. will lead this portion of commissioning testing. Each Contractor will be responsible, as required, to put the system in various modes of operation, to fix minor problems found during the test (i.e. problems that can be fixed without delaying the completion of the test), and to witness the testing. Where Stephen Turner Inc. develops a procedure for the test, the Contractor shall implement the test to the satisfaction of Stephen Turner Inc.
   c. Contractors shall attend and operate equipment during commissioning testing as required by the specific test being performed.
7. Inter-System Testing
   a. Additional inter-system testing is required under the Owner's Commissioning process to ensure that work in this Division is properly interoperable with other work. Contractors shall participate in system level and inter-system testing. Testing will include operation under both normal power and emergency power where applicable, and complete exercising of systems through all modes and sequences. The inter-system functional performance tests will address all systems with interface to other systems. These systems include but are not limited to:
      1) HVAC and hot water systems
      2) BAS system
      3) Fire detection and life safety systems
      4) Metering system
      5) Plumbing systems including but not limited to Domestic Hot Water and pumps
      6) Tel/data systems

7) Lighting controls, indoor and outdoor
8) Power systems
9) Emergency power systems, including recovery from utility power loss

3.9 SITE OBSERVATIONS AND VERIFICATION

A. No additional requirements for this Division.

3.10 DOCUMENTATION OF COMMISSIONING ISSUES

A. Additional requirements for this Division:

1. Each direct equipment supplier, and each supplier of other equipment not adequately represented by technical personnel from the responsible Contractor shall assist the installing contractor in resolving commissioning issues.

3.11 TRAINING

A. No additional requirements for this Division.

3.12 AS-BUILT DRAWINGS

A. No additional requirements for this Division.

END OF SECTION 22 08 00

SECTION 221113

FACILITY WATER DISTRIBUTION PIPING

PART 1 - GENERAL

1.1 RELATED DOCUMENTS

A. Drawings and general provisions of the Contract, including General and Supplementary Conditions and Division 01 Specification Sections, apply to this Section.

B. Rhode Island Department of Transportation Standard Specifications for Roads and Bridge Construction amended to February 2024.

C. Specification references made herein for manufactured materials such as pipe, hydrants, valves and fittings refer to designations for American Water Works Association (AWWA), or to American Standards Association (ASA) as they are effective on the date of call for bids. Copies of these publications may be obtained at nominal cost from the American Water Works Association, 2 Park Avenue, New York, NY 10016, and from the American Standards Association, 10 East 40th Street, New York, NY 10016.

1.2 SUMMARY

A. This Section includes water-distribution piping and related components outside the building for water services and fire-services.

B. Connections for hangar building domestic and fire services are to owner owned main (after the site existing water meter).

C. Coordinate with any City of Pawtucket Department of Public Works Water Division rules, regulations and requirements and obtain permits and pay any permit fees, connection, inspection, testing, meter or other fees imposed by the utility.

1.3 SUBMITTALS

A. Product Data: For each type of product indicated, including pipe, fittings, valves, accessories, tapping sleeves and valve boxes.

B. Furnish one (1) copy of results of hydrostatic pressure test and results of disinfection testing to Owner and, if required, to utility provider after completion of water distribution backfilling operations.

C. All materials shall be as specified herein or as indicated on the Contract Drawings. The Contractor shall submit to the Engineer the manufacturer's name with details of pipe, fittings, joints, valves, service connections, and appurtenances.

D. Operation and Maintenance Data: For water valves and specialties to include in emergency, operation, and maintenance manuals.

1.4 QUALITY ASSURANCE

A. Regulatory Requirements:

1. Comply with requirements of City of Pawtucket Department of Public Works Water Division. Including tapping of water mains and any backflow prevention.
2. Comply with standards of authorities having jurisdiction for potable-water-service piping, including materials, installation, testing, and disinfection.
3. Comply with standards of authorities having jurisdiction for fire-suppression water-service piping, including materials, hose threads, installation, and testing.
4. Obtain and comply with Rhode Island Department of Environmental Management to permit for discharge of chlorinated water from pipe flushing and disinfection operations.

B. Piping materials shall bear label, stamp, or other markings of specified testing agency.

C. Electrical Components, Devices, and Accessories: Listed and labeled as defined in NFPA 70, Article 100, by a testing agency acceptable to authorities having jurisdiction, and marked for intended use.

D. Comply with FMG's "Approval Guide" or UL's "Fire Protection Equipment Directory" for fire-service-main products.

E. NFPA Compliance: Comply with NFPA 24 for materials, installations, tests, flushing, and valves for fire-service piping for fire suppression.

F. NSF Compliance:

1. Comply with NSF 61 for materials for water-service piping and specialties for domestic water.

1.5 DELIVERY, STORAGE, AND HANDLING

A. Preparation for Transport: Prepare valves according to the following:

1. Ensure that valves are dry and internally protected against rust and corrosion.
2. Protect valves against damage to threaded ends and flange faces.
3. Set valves in best position for handling. Set valves closed to prevent rattling.

B. During Storage: Use precautions for valves according to the following:

1. Do not remove end protectors unless necessary for inspection; then reinstall for storage.
2. Protect from weather. Store indoors and maintain temperature higher than ambient dew-point temperature. Support off the ground or pavement in watertight enclosures when outdoor storage is necessary.

C. Handling: Use sling to handle valves and fire hydrants if size requires handling by crane or lift. Rig valves to avoid damage to exposed parts. Do not use handwheels or stems as lifting or rigging points.

D. Deliver piping with factory-applied end caps. Maintain end caps through shipping, storage, and handling to prevent pipe-end damage and to prevent entrance of dirt, debris, and moisture.

E. Protect stored piping from moisture and dirt. Elevate above grade. Do not exceed structural capacity of floor when storing inside.

F. Protect flanges, fittings, and specialties from moisture and dirt.

1.6 PROJECT CONDITIONS

A. Interruption of Existing Water-Distribution Service: Do not interrupt service to facilities occupied by Owner or others unless permitted under the following conditions and then only after arranging to provide temporary water-distribution service according to requirements indicated:

1. Notify Architect, Engineer, Construction Manager and Owners no fewer than two days in advance of proposed interruption of service.
2. Do not proceed with interruption of water-distribution service without Architect's, Engineer's Construction Manager's and Owner's written permission.
3. The Contractor shall visit the site, prior to submitting his bid, inform himself of the conditions and make his own estimates of the facilities and difficulties attending the execution of the work.
4. The Contractor shall be responsible for avoidance and cleanup of street spillage and tracking to the satisfaction of the local and state authorities, and Owner.
5. The right to make any inspections deemed necessary at the source of supply, and during preparation of any material used in this work, is reserved.
6. The Contractor shall obtain and pay for all permits, tests, inspections, etc., required by agencies that have jurisdiction over the project. All work shall be executed and inspected in accordance with all local and state codes, rules, ordinances, or regulations pertaining to the particular type of work involved. Should any changes in the Contract Drawings and Specifications be required to conform to such ordinances, notify the Owner at the time of submitting bid. After entering into the Contract, the Contractor shall be held responsible for the completion of all work necessary for a complete and approved installation without extra expense to the Owner. This Contractor shall prepare any supplementary detailed diagrams or drawings which may be required by any local or state authority.

1.7 COORDINATION

A. Coordinate connection to water main with City of Pawtucket Department of Public Works Water Division as applicable.

PART 2 - PRODUCTS

2.1 COPPER TUBE AND FITTINGS

A. Soft Copper Tube: ASTM B 88, Type K, water tube, annealed temper.

1. Copper, Pressure-Seal Compression Fittings:

a. Manufacturers: Subject to compliance with requirements, provide products by one of the following:

1) Mueller Co.; Water Products Div.

2) Ford Meter Box Co. Inc. (The); Pipe Products Div.

2.2 DUCTILE-IRON PIPE AND FITTINGS

A. Not Applicable.

2.3 PIPING SPECIALTIES

A. Transition Fittings: Manufactured fitting or coupling same size as, with pressure rating at least equal to and ends compatible with, piping to be joined.

B. Tubular-Sleeve Pipe Couplings:

1. Available Manufacturers: Subject to compliance with requirements, manufacturers offering products that may be incorporated into the Work include, but are not limited to, the following:
2. Manufacturers: Subject to compliance with requirements, provide products by one of the following:

   a. Cascade Waterworks Manufacturing.
   b. Dresser, Inc.; Dresser Piping Specialties.
   c. Ford Meter Box Company, Inc. (The); Pipe Products Div.
   d. Hays Fluid Controls; a division of ROMAC Industries Inc.
   e. JCM Industries.
   f. Smith-Blair, Inc.
   g. Viking Johnson.

3. Description: Metal, bolted, sleeve-type, reducing or transition coupling, with center sleeve, gaskets, end rings, and bolt fasteners and with ends of same sizes as piping to be joined.

   a. Standard: AWWA C219.
   b. Center-Sleeve Material: Stainless steel.
   c. Gasket Material: Natural or synthetic rubber.
   d. Pressure Rating: 200 psig minimum.
   e. Metal Component Finish: Corrosion-resistant coating or material.

2.4 JOINTING MATERIALS

A. Joints:

1. All joints, unless otherwise indicated on the Contract Drawings, shall be push-on design or mechanical, both complying with ANSI A21.11. Use restrained joints where required.

B. Restrained Joints:

1. Restrained joints are required for fittings and at bends. Provide at minimum, two full lengths or restrained joint pipe on both sides of the fitting or bend. The exact length of restrained pipe shall be determined by actual pipe thrust and restrained length shall be approved by the Engineer.

C. Flanged Joints:

1. Flanged joints, where required, shall have flanges drilled to ANSI 125 psi standard, and be long hub screwed on type flanges per ANSI B16.1 as amended. Gaskets to be full-face, flat ring gaskets of rubber with cloth insertion 1/16 inch thick.

2.5 GATE VALVES

A. Not Applicable

2.6 GATE VALVE ACCESSORIES AND SPECIALTIES

A. Not Applicable.

2.7 CORPORATION VALVES AND CURB VALVES

A. Manufacturers:

1. Available Manufacturers: Subject to compliance with requirements, manufacturers offering products that may be incorporated into the Work include, but are not limited to, the following:
2. Manufacturers: Subject to compliance with requirements, provide products by one of the following:

a. Ford Meter Box Company, Inc. (The); Pipe Products Div., Models F-1000G (corporation) or B44-444G (curb valve).
b. Mueller Co.; Water Products Div., Model H15008 (corporation) or B25029 (curb valve).

B. Curb Valves: Comply with AWWA C800. Include bronze body, ground-key plug or ball, and wide tee head, with inlet and outlet matching service piping material.

C. Service Boxes for Curb Valves: Similar to AWWA M44 requirements for cast-iron valve boxes. Include cast-iron telescoping top section of length required for depth of burial of valve, plug with lettering "WATER," and bottom section with base that fits over curb valve and with a barrel approximately 3 inches in diameter.

1. Shutoff Rods: Steel, tee-handle with one pointed end, stem of length to operate deepest buried valve, and slotted end matching curb valve.

2. Erie Curb Box, 2-hole cover type.

2.8 WATER METERS

A. Shall meet the requirements of Pawtucket Water Supply Board Rules and Regulations.

2.9 METER PITS

A. Not applicable.

2.10 THRUST BLOCKING

A. Where required place 3,000 psi concrete to provide sufficient bearing area to transmit unbalanced thrust from bends, tees, caps, or plugs to undisturbed soil without loading undisturbed soil in excess of 3,000 lbs. per sq. ft. when water main pressure is 100 psi.

B.

Pipe Diameter	Tees (sq. ft.)	90 Degree Bend (sq. ft.)	45 Degree Bend (sq. ft.)	22-1/2 Bend (sq. ft.)	11-1/4 Degree Bend (sq. ft.)
3”	1.0	1.0	1.0	1.0	1.0
4”	1.0	1.0	1.0	1.0	1.0
6”	1.5	2.0	1.0	1.0	1.0
8”	2.5	3.5	1.8	1.0	1.0
10”	4.0	5.5	2.8	1.5	1.0
12”	6.0	8.0	4.0	2.0	1.5

PART 3 - EXECUTION

3.1 EARTHWORK

A. Refer to Division 31 Section "Earthwork" for excavating, trenching, bedding, and backfilling.

3.2 PIPING APPLICATIONS

A. General: Use pipe, fittings, and joining methods for piping systems according to the following applications.

B. Transition couplings and special fittings with pressure ratings at least equal to piping pressure rating may be used, unless otherwise indicated.

C. Do not use flanges or unions for underground piping.

D. Flanges, unions, and special fittings will be used, instead of joints indicated, on aboveground piping and piping in vaults.

E. Underground water-service piping NPS 3/4 to NPS 3 shall be the following:

1. Soft copper tube, ASTM B 88, Type K copper, pressure-seal fittings; and pressure-sealed joints.

F. Underground water-service piping NPS 4 to NPS 8 shall be the following: Not Applicable

3.3 VALVE APPLICATIONS

A. Not Applicable

3.4 PIPING INSTALLATION

A. Water-Main Connection: Tap water main according to requirements of City of Pawtucket Department of Public Works Water Division and of size and in location indicated. Coordinate with City of Pawtucket Department of Public Works Water Division, as applicable.

B. Make connections larger than NPS 2 with tapping machine according to the following: Not applicable

C. Make connections NPS 2 and smaller with drilling machine according to the following:

1. Install service-saddle assemblies and corporation valves in size, quantity, and arrangement required by City of Pawtucket Department of Public Works standards.
2. Install service-saddle assemblies on water-service pipe to be tapped. Position outlets for corporation valves.
3. Use drilling machine compatible with service-saddle assemblies and corporation valves. Drill hole in main. Remove drilling machine and connect water-service piping.
4. Install corporation valve into service-saddle assembly.
5. Install curb valve in water-service piping with head pointing up and with service box.

D. Bury piping with depth of cover over top at least 60 inches.

E. Extend water-service piping and connect to water-supply source and building-water-piping systems at outside face of building wall in locations and with pipe sizes indicated.

1. Terminate water-service piping at building wall until building-water-piping systems are installed. Terminate piping with caps, plugs, or flanges as required for piping material. Make connections to building-water-piping systems when those systems are installed.

F. Install underground piping with restrained joints at horizontal and vertical changes in direction. Use restrained-joint piping, thrust blocks, anchors, tie-rods and clamps, and retainer glands and other supports. Deflect pipe at joints in pipe no greater than allowed by pipe manufacturer, and no more than 5 degrees per joint.

G. Clearance of mains and service piping with other underground trenches shall be not less than 12 inches. When crossing sanitary sewers, clearance shall be 18 inches vertically. When parallel to and at same elevation or within 18 inches of sanitary sewers, the minimum horizontal offset shall be 10 feet.

3.5 JOINT CONSTRUCTION

A. Make pipe joints according to the following:

1. Copper-Tubing, Pressure-Sealed Joints: Use proprietary crimping tool and procedure recommended by copper, pressure-seal-fitting manufacturer.

2. Dissimilar Materials Piping Joints: Use adapters compatible with both piping materials, with OD, and with system working pressure.

3.6 ANCHORAGE INSTALLATION

A. Anchorage, General: Install water-distribution piping with restrained joints. Anchorages and restrained-joint types that may be used include the following:

1. Concrete thrust blocks.
2. Locking mechanical joints.
3. Set-screw mechanical retainer glands.
4. Bolted flanged joints.
5. Pipe clamps and tie rods.

B. Install anchorages for tees, plugs and caps, bends, crosses, valves, and hydrant branches. Include anchorages for the following piping systems:

1. Gasketed-Joint, Ductile-Iron, Water-Service Piping: According to AWWA C600.
2. Fire-Service-Main Piping: According to NFPA 24.

C. Apply full coat of asphalt or other acceptable corrosion-resistant material to surfaces of installed ferrous anchorage devices.

3.7 VALVE INSTALLATION

A. Not applicable.

3.8 WATER METER INSTALLATION

A. Shall meet the requirements of PWSB Rules and Regulations.

3.9 ROUGHING-IN FOR WATER METERS

A. Not applicable.

3.10 CONNECTIONS

A. Piping installation requirements are specified in other Division 22 Sections. Drawings indicate general arrangement of piping, fittings, and specialties.

B. Connect water-distribution piping to existing water main.

C. Connect water-distribution piping to interior domestic water and fire-suppression piping.

3.11 FIELD QUALITY CONTROL

A. Piping Tests: After the pipe has been laid and partly backfilled as specified herein, all-newly laid pipe or any valved sections of it shall, unless otherwise expressly specified, be subjected to a hydrostatic pressure equal to 50 percent more than the operating pressure at the lowest

elevation of the pipe section, but not to exceed the pressure at the lowest elevation of the pipe section, but not to exceed the pressure rating of the type of pipe specified. The duration of each pressure test shall be for a period of not less than one hour and not more than six hours. The basic provisions of AWWA C600 and C603 shall be applicable.

1. Each section of pipe to be tested, as determined by the Owner, shall be slowly filled with water and the specified test pressure shall be applied by means of a pump connected to the pipe in a satisfactory manner. The pump pipe connection and all necessary apparatus including gauges and meters shall be furnished by the Contractor. Before applying the specified test pressure, all air shall be expelled from the pipe. To accomplish this, taps shall be made, if necessary, at points of highest elevation and afterwards tightly plugged. Any cracked or defective pipes, fittings, valves or hydrants discovered in consequence of this pressure test shall be removed and replaced by the Contractor with sound material and the test shall be repeated until satisfactory to the Owner. Provisions of AWWA C600 and C603, where applicable, shall apply.

2. Leakage Test:

   a. After completion of the pressure test, a leakage test shall be conducted to determine the quantity of water lost by leakage under the specified test pressure. Test pressure is defined as the maximum operating pressure of the section under test and is based on the elevation of the lowest point in the line or section under test corrected to the elevation of the test gauge. Applicable provisions of AWWA C600 and C603 shall apply. Duration of each leakage test shall be a minimum of one hour in addition to the pressure test period.

   b. Allowable leakage in gallons per hour for pipeline shall not be greater than that determined by the formula:

$$L = \frac{ND\,(P)^{1/2}}{7400}$$

NOTE: L = Allowable leakage in gallons per hours.
N = Number of joints in length of pipe line tested.
D = Nominal diameter of the pipe in inches.
P = Average test pressure during leakage test in pounds per square inch gauge.

   c. Leakage is defined as the quantity of water to be supplied in the newly-laid pipe or any valved section under test, which is necessary to maintain the specified leakage test pressure after the pipe has been filled with water and the air expelled.

3.12 IDENTIFICATION

A. Install continuous underground detectable warning tape during backfilling of trench for underground water-distribution piping. Locate below finished grade, directly over piping. Underground warning tapes are specified in Division 31 Section "Earthwork."

3.13 CLEANING

A. Clean and disinfect water-distribution piping as follows or as required by the City of Pawtucket:

1. Flushing:

   a. Sections of pipe to be disinfected shall first be flushed to remove any solids or contaminated material that may have become lodged in the pipe. If no hydrant is installed at the end of the main, then a tap should be provided large enough to develop velocity of at least 2-5/10 feet per second in the main. One 2-1/2 inch hydrant opening will, under normal pressure, provide this velocity in pipe sizes up to and including 12 inches.
   b. All taps 2 inch size and smaller required for chlorination or flushing purposes, or for temporary or permanent release of air shall be provided for by the Contractor as a part of the construction of water mains. Taps larger than 2 inches shall be paid for as a bid item or as an extra.

2. Before being placed into service, all new mains and repaired portions of, or extensions to existing mains shall be chlorinated so that a chlorine residual of not less than 25 mg/1 remains in the water after standing 24 hours in the pipe. Chlorine shall be applied by one of the methods which follow subject to approval by the Owner.

   a. A chlorine gas-water mixture shall be applied by means of a solution-feed chlorinating device, or a dry gas may be fed directly through proper devices for regulating the rate of flow and providing effective diffusion of the gas into the water within the pipe being treated. Chlorinating devices for feeding solution of the chlorine gas, or the gas itself, must provide means for preventing the backflow of water into the chlorine.
   b. A mixture of water and high-test calcium hypochlorite (65-70 percent C1) may be substituted for the chlorine gas water mixture. The dry powder shall first be mixed as a paste and then thinned to a 1 percent chlorine solution by adding water to give a total quantity of 7.5 gallons of water per pound of dry powder. This solution shall be injected in one end of the section of main to be disinfected while filling the main with water in the amounts as shown in the table which follows:

Chlorine Requirements to Produce 50 MG/L
Concentration in 100 Foot of Pipe - By Diameter

Pipe Size Inches	100% Chlorine Lb.	1% Chlorine Solution, Gals.
4 0.027	0.33	
6	0.061	0.73
8	0.108	1.30
10 0.170	2.04	
12 0.240	2.88	

   c. Tablet disinfection is best suited to short extensions (up to 2,500 feet) and smaller diameter mains (up to 12 inches). Since preliminary flushing must be eliminated in using this method, it should be utilized only when scrupulous cleanliness has been used in construction. It shall not be used if trench water or foreign material has entered the main or if the water is below 40 degrees F.

   d. Tablets should be placed in each section of pipe, hydrant branches and other appurtenances. Tablets must be at the top of the main and shall be attached by an adhesive, such as Permatex No. 1 or any alternative approved by the Owner. Tablets in joints between pipe sections, hydrants, hydrant branches or appurtenances are to be crushed and placed inside the annular space, rubbed like chalk in butt ends of sections to coat them if the type of assembly does not permit crushing.

In filling a section if piping with water when using the tablet method, water velocity shall be less than 1 foot per second.

Number of 5-Gram Hypochlorite Tablets Required
for a Dosage of 50 MG/L per Length of Pipe Section

Pipe Size Inches	Length of Pipe Section Up to 13	18	20	30	40
2	1	1	1	1	1
4	1	1	1	2	2
6	2	2	2	3	4
8	2	3	3	5	6
10	3	5	5	7	9
12	5	6	7	10	14

3. The preferred point of application of the chlorinating agent is at the beginning of the pipeline extension or any valved section of it, and through a corporation stop inserted in the pipe. The water injector for delivering the chlorine-bearing water into the pipe should be supplied from a tap made on the pressure side of the gate valve controlling the flow into the pipe line extension. Alternate points of application may be used when approved or directed by the Owner.

4. Valves shall be manipulated so that the strong chlorine solution in the line being treated will not flow back into the line supplying the water. Check valves may be used if desired.

5. Treated water shall be retained in the pipe at least 24 hours. After this period, the chlorine residual at pipe extremities and at other representative points shall be at least 25 mg/1.

6. In the process of chlorinating newly-laid pipe, all valves or other appurtenances shall be operated while the pipe line is filled with the chlorinating agent and under normal operating pressure.

7. Final Flushing:

   a. Following chlorination, all treated water shall be thoroughly flushed from the newly laid pipe at its extremity until the replacement water throughout its length shows upon test, a chlorine residual of less than 1 mg/1. In the event chlorine is normally used in the source of supply, then the tests shall show a residual of not in excess of that carried in the system.

   b. After flushing, water samples collected on two successive days from the treated piping system, as directed by the Project Manager, shall show satisfactory bacteriological results. Bacteriological analysis must be performed by a laboratory approved by the Rhode Island Department of Environmental Management (RIDEM and Environmental Protection Agency.

   c. Obtain (RIDEM) permit for discharge of chlorinated water from water piping prior to construction and discharge chlorinated water in accordance with RIDEM and RIDEM permit requirements.

END OF SECTION 221113

SECTION 22 11 16 - DOMESTIC WATER PIPING

PART 1 - GENERAL

1.1 RELATED DOCUMENTS

A. Drawings and general provisions of the Contract, including General and Supplementary Conditions and Division 01 specification sections, apply to this section.

1.2 SECTION INCLUDES

A. Under-building slab and aboveground domestic water pipes, tubes, fittings, and specialties inside the building.

B. Specialty valves.

C. Flexible connectors.

D. Water meters furnished by utility company for installation by Contractor.

E. Water meters.

1.3 RELATED SECTION

A. Section 22 11 19 – Domestic Water Piping Specialties

1.4 PERFORMANCE REQUIREMENTS

A. Seismic Performance: Domestic water piping and support and installation shall withstand effects of earthquake motions determined according to ASCE/SEI 7.

1.5 SUBMITTALS

A. Submit under provisions of Section 01 33 00.

B. Product Data: For the following products:

1. Specialty valves.
2. Transition fittings.
3. Dielectric fittings.
4. Flexible connectors.
5. Water meters.
6. Piping
7. Water penetration systems.

C. Water Samples: Specified in "Cleaning" article.

D. Coordination Drawings: For piping in equipment rooms and other congested areas, drawn to scale, on which the following items are shown and coordinated with each other, using input from installers of the items involved:

1. Fire-suppression-water piping.
2. Domestic water piping.
3. Compressed air piping.
4. HVAC hydronic piping.

E. Field quality-control reports.

1.6 QUALITY ASSURANCE

A. Piping materials shall bear label, stamp, or other markings of specified testing agency.

B. Comply with NSF 14 for plastic, potable domestic water piping and components.

C. Comply with NSF 61 for potable domestic water piping and components.

1.7 COORDINATION

A. Coordinate sizes and locations of concrete bases with actual equipment provided.

PART 2 - PRODUCTS

2.1 PIPING MATERIALS

A. Comply with requirements in "Piping Schedule" article for applications of pipe, tube, fitting materials, and joining methods for specific services, service locations, and pipe sizes.

2.2 COPPER TUBE AND FITTINGS

A. Hard Copper Tube: ASTM B88, Type L water tube, drawn temper.

1. Cast-Copper Solder-Joint Fittings: ASME B16.18, pressure fittings.
2. Wrought-Copper Solder-Joint Fittings: ASME B16.22, wrought-copper pressure fittings.
3. Bronze Flanges: ASME B16.24, Class 150, with solder-joint ends.
4. Copper Unions: MSS SP-123, cast-copper-alloy, hexagonal-stock body, with ball-and-socket, metal-to-metal seating surfaces, and solder-joint or threaded ends.

5. Grooved-Joint Copper-Tube Appurtenances:

a. Manufacturers: Subject to compliance with requirements, provide products by one (1) of the following available manufacturers offering products that may be incorporated into the Work include, but are not limited to, the following:

1) Anvil International.
2) Shurjoint Piping Products.

3) Victaulic Company.
4) Wheatland

b. Copper Grooved-End Fittings: ASTM B75 copper tube or ASTM B584 bronze castings.
c. Grooved-End-Tube Couplings: Copper-tube dimensions and design similar to AWWA C606. Include ferrous housing sections, EPDM-rubber gaskets suitable for hot and cold water, and bolts and nuts.

B. Soft Copper Tube: ASTM B88, Type K water tube, annealed temper.

1. Copper Solder-Joint Fittings: ASME B16.22, wrought-copper pressure fittings.
2. Copper Pressure-Seal-Joint Fittings:

a. Manufacturers: Subject to compliance with requirements, provide products by one (1) of the following available manufacturers offering products that may be incorporated into the Work include, but are not limited to, the following:

1) Elkhart Products Corporation; Industrial Division.
2) NIBCO INC.
3) Viega; Plumbing and Heating Systems.

b. NPS 2 and Smaller: Wrought-copper fitting with EPDM-rubber O-ring seal in each end.

c. NPS 3 and NPS 4: Cast-bronze or wrought-copper fitting with EPDM-rubber O-ring seal in each end.

2.3 DUCTILE-IRON PIPE AND FITTINGS

A. Mechanical-Joint, Ductile-Iron Pipe: AWWA C151, with mechanical-joint bell and plain spigot end unless grooved or flanged ends are indicated.

1. Standard-Pattern, Mechanical-Joint Fittings: AWWA C110, ductile or gray iron.
2. Compact-Pattern, Mechanical-Joint Fittings: AWWA C153, ductile iron.

a. Glands, Gaskets, and Bolts: AWWA C111, ductile- or gray-iron glands, rubber gaskets, and steel bolts.

B. Push-on-Joint, Ductile-Iron Pipe: AWWA C151, with push-on-joint bell and plain spigot end unless grooved or flanged ends are indicated.

1. Standard-Pattern, Push-on-Joint Fittings: AWWA C110, ductile or gray iron.

a. Gaskets: AWWA C111, rubber.

2. Compact-Pattern, Push-on-Joint Fittings: AWWA C153, ductile iron.

a. Gaskets: AWWA C111, rubber.

2.4 PIPING JOINING MATERIALS

A. Pipe-Flange Gasket Materials: AWWA C110, rubber, flat face, 1/8-inch thick or ASME B16.21, nonmetallic and asbestos free, unless otherwise indicated; full-face or ring type unless otherwise indicated.

B. Metal, Pipe-Flange Bolts and Nuts: ASME B18.2.1, carbon steel unless otherwise indicated.

C. Solder Filler Metals: ASTM B32, lead-free alloys. Include water-flushable flux according to ASTM B813.

D. Brazing Filler Metals: AWS A5.8, BCuP Series, copper-phosphorus alloys for general-duty brazing unless otherwise indicated.

E. Plastic, Pipe-Flange Gaskets, Bolts, and Nuts: Type and material recommended by piping system manufacturer unless otherwise indicated.

2.5 SPECIALTY VALVES

A. Comply with requirements in Section 22 05 23 for general-duty metal valves.

B. Comply with requirements in Section 22 11 19 for balancing valves, drain valves, backflow preventers, and vacuum breakers.

2.6 TRANSITION FITTINGS

A. General Requirements:

1. Same size as pipes to be joined.
2. Pressure rating at least equal to pipes to be joined.
3. End connections compatible with pipes to be joined.

B. Fitting-Type Transition Couplings: Manufactured piping coupling or specified piping system fitting.

C. Sleeve-Type Transition Coupling: AWWA C219.

1. Manufacturers: Subject to compliance with requirements, provide products by one (1) of the following available manufacturers offering products that may be incorporated into the Work include, but are not limited to, the following:

a. Cascade Waterworks Manufacturing.
b. Dresser, Inc.; Dresser Piping Specialties.
c. Ford Meter Box Company, Inc. (The).
d. JCM Industries.
e. Romac Industries, Inc.
f. Smith-Blair, Inc; a Sensus company.
g. Viking Johnson; c/o Mueller Co.

2.7 DIELECTRIC FITTINGS

A. General Requirements: Assembly of copper alloy and ferrous materials with separating nonconductive insulating material. Include end connections compatible with pipes to be joined.

B. Dielectric Unions:

1. Manufacturers: Subject to compliance with requirements, provide products by one (1) of the following available manufacturers offering products that may be incorporated into the Work include, but are not limited to, the following:
   a. Hart Industries International, Inc.
   b. Jomar International Ltd.
   c. Matco-Norca, Inc.
   d. Watts Regulator Co.; a division of Watts Water Technologies, Inc.
   e. Wilkins; a Zurn company.

2. Description:

   a. Standard: ASSE 1079.
   b. Pressure Rating: 150 psig.
   c. End Connections: Solder-joint copper alloy and threaded ferrous.

C. Dielectric Flanges:

1. Manufacturers: Subject to compliance with requirements, provide products by one (1) of the following available manufacturers offering products that may be incorporated into the Work include, but are not limited to, the following:

   a. Capitol Manufacturing Company.
   b. Central Plastics Company.
   c. Matco-Norca, Inc.
   d. Watts Regulator Co.; a division of Watts Water Technologies, Inc.
   e. Wilkins; a Zurn company.

2. Description:

   a. Standard: ASSE 1079.
   b. Factory-fabricated, bolted, companion-flange assembly.
   c. Pressure Rating: 175 psig.
   d. End Connections: Solder-joint copper alloy and threaded ferrous; threaded solder-joint copper alloy and threaded ferrous.

D. Dielectric-Flange Insulating Kits:

1. Manufacturers: Subject to compliance with requirements, provide products by one (1) of the following available manufacturers offering products that may be incorporated into the Work include, but are not limited to, the following:

   a. Advance Products & Systems, Inc.
   b. Calpico, Inc.
   c. Central Plastics Company.
   d. Pipeline Seal and Insulator, Inc.

2. Description:

a. Non-conducting materials for field assembly of companion flanges.
b. Pressure Rating: 150 psig.
c. Gasket: Neoprene or phenolic.
d. Bolt Sleeves: Phenolic or polyethylene.
e. Washers: Phenolic with steel backing washers.

E. Dielectric Nipples:

1. Manufacturers: Subject to compliance with requirements, provide products by one (1) of the following available manufacturers offering products that may be incorporated into the Work include, but are not limited to, the following:

a. Elster Perfection.
b. Grinnell Mechanical Products.
c. Matco-Norca, Inc.
d. Precision Plumbing Products, Inc.
e. Victaulic Company.

2. Description:

a. Standard: IAPMO PS 66
b. Electroplated steel nipple complying with ASTM F1545.
c. Pressure Rating: 300 psig at 225 degrees F
d. End Connections: Male threaded or grooved.
e. Lining: Inert and noncorrosive, propylene.

2.8 FLEXIBLE CONNECTORS

A. Manufacturers: Subject to compliance with requirements, provide products by one (1) of the following available manufacturers offering products that may be incorporated into the Work include, but are not limited to, the following:

1. Flex-Hose Co., Inc.
2. Flexicraft Industries.
3. Hyspan Precision Products, Inc.
4. Mercer Rubber Co.
5. Metraflex, Inc.

B. Bronze-Hose Flexible Connectors: Corrugated-bronze tubing with bronze wire-braid covering and ends brazed to inner tubing.

1. Working-Pressure Rating: Minimum 250 psig.
2. End Connections NPS 2 and Smaller: Threaded copper pipe or plain-end copper tube.
3. End Connections NPS 2-1/2 and Larger: Flanged copper alloy.

C. Stainless Steel Hose Flexible Connectors: Corrugated stainless steel tubing with stainless-steel wire-braid covering and ends welded to inner tubing.

1. Working-Pressure Rating: Minimum 250 psig.
2. End Connections NPS 2 and Smaller: Threaded steel-pipe nipple.
3. End Connections NPS 2-1/2 and Larger: Flanged steel nipple.

2.9 WATER METERS

A. SUB METERS:

1. Manufacturers: Subject to compliance with requirements, provide products by one (1) of the following available manufacturers offering products that may be incorporated into the Work include, but are not limited to, the following:

2.

PART 3 - EXECUTION

3.1 EARTHWORK

A. Comply with requirements in Section 31 20 00 for excavating, trenching, and backfilling.

3.2 PIPING INSTALLATION

A. Drawing plans, schematics, and diagrams indicate general location and arrangement of domestic water piping. Indicated locations and arrangements are used to size pipe and calculate friction loss, expansion, and other design considerations. Install piping as indicated unless deviations to layout are approved on Coordination Drawings.

B. Install copper tubing under building slab according to CDA's "Copper Tube Handbook."

C. Install ductile-iron piping under building slab with restrained joints according to AWWA C600 and AWWA M41.

D. Install underground [**copper tube**] [**and**] [**ductile-iron pipe**] in PE encasement according to ASTM A674 or AWWA C105.

E. Install shutoff valve, hose-end drain valve, strainer, pressure gage, and test tee with valve, inside the building at each domestic water service entrance. Comply with requirements in Section 22 05 19 for pressure gages and Section 22 11 19 for drain valves and strainers.

F. Install shutoff valve immediately upstream of each dielectric fitting.

G. Install water-pressure-reducing valves downstream from shutoff valves. Comply with requirements in Section 22 11 19 for pressure-reducing valves.

H. Install domestic water piping level [**with 0.25 percent slope downward toward drain**] [**without pitch**] and plumb.

I. Rough-in domestic water piping for water-meter installation according to utility company's requirements.

J. Install seismic restraints on piping. Comply with requirements in Section 22 05 48 for seismic-restraint devices.

K. Install piping concealed from view and protected from physical contact by building occupants unless otherwise indicated and except in equipment rooms and service areas.

L. Install piping indicated to be exposed and piping in equipment rooms and service areas at right angles or parallel to building walls. Diagonal runs are prohibited unless specifically indicated otherwise.

M. Install piping above accessible ceilings to allow sufficient space for ceiling panel removal, and coordinate with other services occupying that space.

N. Install piping adjacent to equipment and specialties to allow service and maintenance.

O. Install piping to permit valve servicing.

P. Install nipples, unions, special fittings, and valves with pressure ratings the same as or higher than system pressure rating used in applications below unless otherwise indicated.

Q. Install piping free of sags and bends.

R. Install fittings for changes in direction and branch connections.

S. Install unions in copper tubing at final connection to each piece of equipment, machine, and specialty.

T. Install pressure gages on suction and discharge piping from each plumbing pump and packaged booster pump. Comply with requirements in Section 22 05 19 for pressure gages.

U. Install thermostats in hot-water circulation piping. Comply with requirements in Section 22 11 23 for thermostats.

V. Install thermometers on [**inlet and**] outlet piping from each water heater. Comply with requirements in Section 22 05 19 for thermometers.

W. Install sleeves for piping penetrations of walls, ceilings, and floors. Comply with requirements for sleeves specified in Section 22 05 17.

X. Install sleeve seals for piping penetrations of concrete walls and slabs. Comply with requirements for sleeve seals specified in Section 22 05 17.

Y. Install escutcheons for piping penetrations of walls, ceilings, and floors. Comply with requirements for escutcheons specified in Section 22 05 18.

3.3 JOINT CONSTRUCTION

A. Ream ends of pipes and tubes and remove burrs. Bevel plain ends of steel pipe.

B. Remove scale, slag, dirt, and debris from inside and outside of pipes, tubes, and fittings before assembly.

C. Threaded Joints: Thread pipe with tapered pipe threads according to ASME B1.20.1. Cut threads full and clean using sharp dies. Ream threaded pipe ends to remove burrs and restore full ID. Join pipe fittings and valves as follows:

1. Apply appropriate tape or thread compound to external pipe threads.
2. Damaged Threads: Do not use pipe or pipe fittings with threads that are corroded or damaged.

D. Brazed Joints: Join copper tube and fittings according to CDA's "Copper Tube Handbook," "Brazed Joints" Chapter.

E. Soldered Joints: Apply ASTM B813, water-flushable flux to end of tube. Join copper tube and fittings according to ASTM B828 or CDA's "Copper Tube Handbook."

F. Pressure-Sealed Joints: Join copper tube and pressure-seal fittings with tools recommended by fitting manufacturer.

G. Copper-Tubing, Push-on Joints: Clean end of tube. Measure insertion depth with manufacturer's depth gage. Join copper tube and push-on-joint fittings by inserting tube to measured depth.

H. Extruded-Tee Connections: Form tee in copper tube according to ASTM F2014. Use tool designed for copper tube; drill pilot hole, form collar for outlet, dimple tube to form seating stop, and braze branch tube into collar.

I. Copper-Tubing Grooved Joints: Roll groove end of tube. Assemble coupling with housing, gasket, lubricant, and bolts. Join copper tube and grooved-end fittings according to AWWA C606 for roll-grooved joints.

J. Ductile-Iron-Piping Grooved Joints: Cut groove end of pipe. Assemble coupling with housing, gasket, lubricant, and bolts. Join ductile-iron pipe and grooved-end fittings according to AWWA C606 for ductile-iron-pipe, cut-grooved joints.

K. Steel-Piping Grooved Joints: [**Cut**] [**Cut or roll**] [**Roll**] groove end of pipe. Assemble coupling with housing, gasket, lubricant, and bolts. Join steel pipe and grooved-end fittings according to AWWA C606 for steel-pipe grooved joints.

L. Flanged Joints: Select appropriate asbestos-free, nonmetallic gasket material in size, type, and thickness suitable for domestic water service. Join flanges with gasket and bolts according to ASME B31.9.

M. Plastic Piping Solvent-Cement Joints: Clean and dry joining surfaces. Join pipe and fittings according to the following:

1. Comply with ASTM F402 for safe-handling practice of cleaners, primers, and solvent cements. Apply primer.
2. CPVC Piping: Join according to ASTM D2846 Appendix.
3. PVC Piping: Join according to ASTM D2855.

N. Dissimilar-Material Piping Joints: Make joints using adapters compatible with materials of both piping systems.

3.4 VALVE INSTALLATION

A. General-Duty Valves: Comply with requirements in Section 22 05 23 for valve installations.

B. Install shutoff valve close to water main on each branch and riser serving plumbing fixtures or equipment, on each water supply to equipment, and on each water supply to plumbing fixtures that do not have supply stops. Use ball or gate valves for piping NPS 2 and smaller. Use butterfly or gate valves for piping NPS 2-1/2 and larger.

C. Install drain valves for equipment at base of each water riser, at low points in horizontal piping, and where required to drain water piping. Drain valves are specified in Section 22 11 19.

1. Hose-End Drain Valves: At low points in water mains, risers, and branches.
2. Stop-and-Waste Drain Valves: Instead of hose-end drain valves where indicated.

D. Install balancing valve in each hot-water circulation return branch and discharge side of each pump and circulator. Set balancing valves partly open to restrict but not stop flow. Use ball valves for piping NPS 2 and smaller and butterfly valves for piping NPS 2-1/2 and larger. Comply with requirements in Section 22 11 19 for balancing valves.

E. Install calibrated balancing valves in each hot-water circulation return branch and discharge side of each pump and circulator. Set calibrated balancing valves partly open to restrict but not stop flow. Comply with requirements in Section 22 11 19 for calibrated balancing valves.

3.5 TRANSITION FITTING INSTALLATION

A. Install transition couplings at joints of dissimilar piping.

B. Transition Fittings in Underground Domestic Water Piping:

1. NPS 1-1/2 and Smaller: Fitting-type coupling.

2. NPS 2 and Larger: Sleeve-type coupling.

C. Transition Fittings in Aboveground Domestic Water Piping NPS 2 and Smaller: Plastic-to-metal transition [**fittings**] [**or**] [**unions**].

3.6 DIELECTRIC FITTING INSTALLATION

A. Install dielectric fittings in piping at connections of dissimilar metal piping and tubing.

B. Dielectric Fittings for [**NPS 2**] [**Insert pipe size**] and Smaller: Use dielectric [**couplings**] [**couplings or nipples**] [**nipples**] [**unions**].

C. Dielectric Fittings for [**NPS 2-1/2 to NPS 4**] [**Insert pipe size range**]: Use dielectric [**flanges**] [**flange kits**] [**nipples**].

D. Dielectric Fittings for [**NPS 5**] [**Insert pipe size**] and Larger: Use dielectric flange kits.

3.7 FLEXIBLE CONNECTOR INSTALLATION

A. Install flexible connectors in suction and discharge piping connections to each domestic water pump [**and in suction and discharge manifold connections to each domestic water booster pump**].

B. Install bronze-hose flexible connectors in copper domestic water tubing.

C. Install stainless-steel-hose flexible connectors in steel domestic water piping.

3.8 WATER METER INSTALLATION

A. Rough-in domestic water piping [**for water meter installation**] [**, and install water meters**] according to utility company's requirements.

B. Water meters will be furnished and installed by utility company.

C. Install water meters according to AWWA M6, utility company's requirements, and the following:

D. Install displacement-type water meters with shutoff valve on water-meter inlet. Install valve on water-meter outlet and valved bypass around meter unless prohibited by authorities having jurisdiction.

E. Install turbine-type water meters with shutoff valve on water-meter inlet. Install valve on water-meter outlet and valved bypass around meter unless prohibited by authorities having jurisdiction.

F. Install compound-type water meters with shutoff valves on water-meter inlet and outlet and on valved bypass around meter. Support meters, valves, and piping on brick or concrete piers.

G. Install fire-service water meters with shutoff valves on water-meter inlet and outlet and on full-size valved bypass around meter. Support meter, valves, and piping on brick or concrete piers.

H. Install remote registration system according to standards of utility company and of authorities having jurisdiction.

3.9 HANGER AND SUPPORT INSTALLATION

A. Comply with requirements in Section 22 05 48 for seismic-restraint devices.

B. Comply with requirements in Section 22 05 29 for pipe hanger and support products and installation.

1. Vertical Piping: MSS Type 8 or 42, clamps.
2. Individual, Straight, Horizontal Piping Runs:

    a. 100 Feet and Less: MSS Type 1, adjustable, steel clevis hangers.

    b. Longer Than 100 Feet: MSS Type 43, adjustable roller hangers.
    c. Longer Than 100 Feet If Indicated: MSS Type 49, spring cushion rolls.

3. Multiple, Straight, Horizontal Piping Runs 100 Feet or Longer: MSS Type 44, pipe rolls. Support pipe rolls on trapeze.
4. Base of Vertical Piping: MSS Type 52, spring hangers.

C. Support vertical piping and tubing at base and at each floor.

D. Rod diameter may be reduced one (1) size for double-rod hangers, to a minimum of 3/8 inch.

E. Install hangers for copper tubing with the following maximum horizontal spacing and minimum rod diameters:

1. NPS 3/4 and Smaller: 60 inches with 3/8-inch rod.
2. NPS 1 and NPS 1-1/4: 72 inches with 3/8-inch rod.

3. NPS 1-1/2 and NPS 2: 96 inches with 3/8-inch rod.
4. NPS 2-1/2: 108 inches with 1/2-inch rod.
5. NPS 3 to NPS 5: 10 feet with 1/2-inch rod.
6. NPS 6: 10 feet with 5/8-inch rod.
7. NPS 8: 10 feet with 3/4-inch rod.

F. Install supports for vertical copper tubing every 10 feet.

G. Install hangers for steel piping with the following maximum horizontal spacing and minimum rod diameters:

1. NPS 1-1/4 and Smaller: 84 inches with 3/8-inch rod.
2. NPS 1-1/2: 108 inches with 3/8-inch rod.
3. NPS 2: 10 feet with 3/8-inch rod.
4. NPS 2-1/2: 11 feet with 1/2-inch rod.
5. NPS 3 and NPS 3-1/2: 12 feet with 1/2-inch rod.
6. NPS 4 and NPS 5: 12 feet with 5/8-inch rod.
7. NPS 6: 12 feet with 3/4-inch rod.
8. NPS 8 to NPS 12: 12 feet with 7/8-inch rod.

H. Install supports for vertical steel piping every 15 feet.

I. Install vinyl-coated hangers for CPVC piping with the following maximum horizontal spacing and minimum rod diameters:

1. NPS 1 and Smaller: 36 inches with 3/8-inch rod.
2. NPS 1-1/4 to NPS 2: 48 inches with 3/8-inch rod.
3. NPS 2-1/2 to NPS 3-1/2: 48 inches with 1/2-inch rod.
4. NPS 4 and NPS 5: 48 inches with 5/8-inch rod.
5. NPS 6: 48 inches with 3/4-inch rod.
6. NPS 8: 48 inches with 7/8-inch rod.

J. Install supports for vertical CPVC piping every 60 inches for NPS 1 and smaller, and every 72 inches for NPS 1-1/4 and larger.

K. Install vinyl-coated hangers for PVC piping with the following maximum horizontal spacing and minimum rod diameters:

1. NPS 2 and Smaller: 48 inches with 3/8-inch rod.
2. NPS 2-1/2 to NPS 3-1/2: 48 inches with 1/2-inch rod.
3. NPS 4 and NPS 5: 48 inches with 5/8-inch rod.
4. NPS 6: 48 inches with 3/4-inch rod.
5. NPS 8: 48 inches with 7/8-inch rod.

L. Install supports for vertical PVC piping every 48 inches.

M. Support piping and tubing not listed in this article according to MSS SP-69 and manufacturer's written instructions.

3.10 CONNECTIONS

A. Drawings indicate general arrangement of piping, fittings, and specialties.

B. Install piping adjacent to equipment and machines to allow service and maintenance.

C. Connect domestic water piping to exterior water-service piping. Use transition fitting to join dissimilar piping materials.

D. Connect domestic water piping to water-service piping with shutoff valve; extend and connect to the following:

1. Domestic Water Booster Pumps: Cold-water suction and discharge piping.
2. Water Heaters: Cold-water inlet and hot-water outlet piping in sizes indicated, but not smaller than sizes of water heater connections.
3. Plumbing Fixtures: Cold- and hot-water supply piping in sizes indicated, but not smaller than required by plumbing code. Comply with requirements in Division 22 plumbing fixture sections for connection sizes.
4. Equipment: Cold- and hot-water supply piping as indicated, but not smaller than equipment connections. Provide shutoff valve and union for each connection. Use flanges instead of unions for NPS 2-1/2 and larger.

3.11 IDENTIFICATION

A. Identify system components. Comply with requirements in Section 22 05 53 for identification materials and installation.

B. Label pressure piping with system operating pressure.

3.12 FIELD QUALITY CONTROL

A. Perform tests and inspections.

B. Piping Inspections:

1. Do not enclose, cover, or put piping into operation until it has been inspected and approved by authorities having jurisdiction.
2. During installation, notify authorities having jurisdiction at least one (1) day before inspection must be made. Perform tests specified below in presence of authorities having jurisdiction:

   a. Roughing-in Inspection: Arrange for inspection of piping before concealing or closing-in after roughing-in and before setting fixtures.
   b. Final Inspection: Arrange final inspection for authorities having jurisdiction to observe tests specified below and to ensure compliance with requirements.

3. Reinspection: If authorities having jurisdiction find that piping will not pass tests or inspections, make required corrections and arrange for reinspection.
4. Reports: Prepare inspection reports and have them signed by authorities having jurisdiction.

C. Piping Tests:

1. Fill domestic water piping. Check components to determine that they are not air bound and that piping is full of water.
2. Test for leaks and defects in new piping and parts of existing piping that have been altered, extended, or repaired. If testing is performed in segments, submit a separate report for each test, complete with diagram of portion of piping tested.

3. Leave new, altered, extended, or replaced domestic water piping uncovered and unconcealed until it has been tested and approved. Expose work that was covered or concealed before it was tested.
4. Cap and subject piping to static water pressure of 50 psig above operating pressure, without exceeding pressure rating of piping system materials. Isolate test source and allow to stand for four (4) hours. Leaks and loss in test pressure constitute defects that must be repaired.
5. Repair leaks and defects with new materials and retest piping or portion thereof until satisfactory results are obtained.
6. Prepare reports for tests and for corrective action required.

D. Domestic water piping will be considered defective if it does not pass tests and inspections.

E. Prepare test and inspection reports.

3.13 ADJUSTING

A. Perform the following adjustments before operation:

1. Close drain valves, hydrants, and hose bibbs.
2. Open shutoff valves to fully open position.
3. Open throttling valves to proper setting.
4. Adjust balancing valves in hot-water-circulation return piping to provide adequate flow.

    a. Manually adjust ball-type balancing valves in hot-water-circulation return piping to provide flow of hot water in each branch.
    b. Adjust calibrated balancing valves to flows indicated.

5. Remove plugs used during testing of piping and for temporary sealing of piping during installation.
6. Remove and clean strainer screens. Close drain valves and replace drain plugs.
7. Remove filter cartridges from housings and verify that cartridges are as specified for application where used and are clean and ready for use.
8. Check plumbing specialties and verify proper settings, adjustments, and operation.

3.14 CLEANING

A. Clean and disinfect potable [**and non-potable**] domestic water piping as follows:

1. Purge new piping and parts of existing piping that have been altered, extended, or repaired before using.
2. Use purging and disinfecting procedures prescribed by authorities having jurisdiction; if methods are not prescribed, use procedures described in either AWWA C651 or AWWA C652 or follow procedures described below:

    a. Flush piping system with clean, potable water until dirty water does not appear at outlets.
    b. Fill and isolate system according to either of the following:

        1) Fill system or part thereof with water/chlorine solution with at least 50 ppm of chlorine. Isolate with valves and allow to stand for 24 hours.
        2) Fill system or part thereof with water/chlorine solution with at least 200 ppm of chlorine. Isolate and allow to stand for three (3) hours.

c. Flush system with clean, potable water until no chlorine is in water coming from system after the standing time.
d. Submit water samples in sterile bottles to authorities having jurisdiction. Repeat procedures if biological examination shows contamination.

B. Clean non-potable domestic water piping as follows:

1. Purge new piping and parts of existing piping that have been altered, extended, or repaired before using.
2. Use purging procedures prescribed by authorities having jurisdiction or; if methods are not prescribed, follow procedures described below:

a. Flush piping system with clean, potable water until dirty water does not appear at outlets.
b. Submit water samples in sterile bottles to authorities having jurisdiction. Repeat procedures if biological examination shows contamination.

C. Prepare and submit reports of purging and disinfecting activities.

D. Clean interior of domestic water piping system. Remove dirt and debris as work progresses.

3.15 PIPING SCHEDULE

A. Transition and special fittings with pressure ratings at least equal to piping rating may be used in applications below unless otherwise indicated.

B. Flanges and unions may be used for aboveground piping joints unless otherwise indicated.

C. Fitting Option: Extruded-tee connections and brazed joints may be used on aboveground copper tubing.

D. Under-building-slab, domestic water, building service piping, [**NPS 3 and smaller**] [**Insert pipe size range**], shall be [**one (1) of**] the following:

1. Soft copper tube, [**ASTM B88, Type K**] [**ASTM B88, Type L**]; [**wrought-copper solder-joint fittings; and brazed**] [**copper pressure-seal fittings; and pressure-sealed**] joints.
2. PVC, [**Schedule 40 pipe; PVC, Schedule 40**] [**Schedule 80 pipe; PVC, Schedule 80**] socket fittings; and solvent-cemented joints.

E. Under-building-slab, domestic water, building-service piping, [**NPS 4 to NPS 8 and larger**] [**Insert pipe size range**], shall be [**one (1) of**] the following:

1. Soft copper tube, [**ASTM B88, Type K**] [**ASTM B88, Type L**]; wrought-copper solder-joint fittings; and brazed joints.
2. Mechanical-joint, ductile-iron pipe; [**standard-**] [**or**] [**compact-**] pattern mechanical-joint fittings; and mechanical joints.
3. Push-on-joint, ductile-iron pipe; [**standard-**] [**or**] [**compact-**] pattern push-on-joint fittings; and gasketed joints.
4. Plain-end, ductile-iron pipe; grooved-joint, ductile-iron-pipe appurtenances; and grooved joints.
5. PVC, [**Schedule 40 pipe; PVC, Schedule 40**] [**Schedule 80 pipe; PVC, Schedule 80**] socket fittings; and solvent-cemented joints.

F. Under-building slab, combined domestic water, building-service, and fire-service-main piping, [**NPS 6 to NPS 12**] [**Insert pipe size range**], shall be [**one (1) of**] the following:

1. Mechanical-joint, ductile-iron pipe; [**standard-**] [**or**] [**compact-**] pattern mechanical-joint fittings; and mechanical joints.
2. Push-on-joint, ductile-iron pipe; [**standard-**] [**or**] [**compact-**] pattern push-on-joint fittings; and gasketed joints.
3. Plain-end, ductile-iron pipe; grooved-joint, ductile-iron-pipe appurtenances; and grooved joints.

G. Under-building-slab, domestic water piping, [**NPS 2 and smaller**] [**Insert pipe size range**], shall be [**one (1) of**] the following:

1. [**Hard**] [**Hard or soft**] [**Soft**] copper tube, **ASTM B88, Type L**; [**wrought-copper solder-joint fittings; and brazed**] [**copper pressure-seal-joint fittings; and pressure-sealed**] joints.
2. PVC, [**Schedule 40 pipe; PVC, Schedule 40**] [**Schedule 80 pipe; PVC, Schedule 80**] socket fittings; and solvent-cemented joints.

H. Aboveground domestic water piping, [**NPS 2 and smaller**] [**Insert pipe size range**], shall be [**one (1) of**] the following:

1. Galvanized-steel pipe and nipples; galvanized, gray-iron threaded fittings; and threaded joints.
2. Hard copper tube, [**ASTM B88, Type L**] [**ASTM B88, Type M**]; [**cast-**] [**or**] [**wrought-**] copper solder-joint fittings; and [**brazed**] [**soldered**] joints.
3. Hard copper tube, [**ASTM B88, Type L**] [**or**] [**ASTM B88, Type M**]; copper push-on-joint fittings; and push-on joints.
4. CPVC, [**Schedule 40 pipe; CPVC, Schedule 40**] [**Schedule 80 pipe; CPVC, Schedule 80**] socket fittings; and solvent-cemented joints.
5. CPVC, Schedule 80 pipe; CPVC, Schedule 80 threaded fittings; and threaded joints.
6. CPVC Tubing System: CPVC tube; CPVC socket fittings; and solvent-cemented joints. [**NPS 1-1/2 and NPS 2 CPVC pipe with CPVC socket fittings may be used instead of tubing.**]
7. PVC, [**Schedule 40 pipe; PVC, Schedule 40**] [**Schedule 80 pipe; PVC, Schedule 80**] socket fittings; and solvent-cemented joints.

I. Aboveground domestic water piping, [**NPS 2-1/2 to NPS 4**] [**Insert pipe size range**], shall be [**one (1) of**] the following:

1. Hard copper tube, [**ASTM B88, Type L**] [**ASTM B88, Type M**]; [**cast-**] [**or**] [**wrought-**] copper solder-joint fittings; and [**brazed**] [**soldered**] joints.
2. Hard copper tube, [**ASTM B88, Type L**] [**or**] [**ASTM B88, Type M**]; grooved-joint copper-tube appurtenances; and grooved joints.
3. Galvanized steel pipe and nipples; galvanized, gray-iron threaded fittings; and threaded joints.
4. Galvanized steel pipe; grooved-joint, galvanized-steel-pipe appurtenances; and grooved joints.
5. CPVC, [**Schedule 40 pipe; CPVC, Schedule 40**] [**Schedule 80 pipe; CPVC, Schedule 80**] socket fittings; and solvent-cemented joints.
6. CPVC, Schedule 80 pipe; CPVC, Schedule 80 threaded fittings; and threaded joints.
7. PVC, [**Schedule 40 pipe; PVC, Schedule 40**] [**Schedule 80 pipe; PVC, Schedule 80**] socket fittings; and solvent-cemented joints.

J. Aboveground domestic water piping, [**NPS 5 to NPS 8**] [**Insert pipe size range**], shall be [**one (1) of**] the following:

1. Hard copper tube, [**ASTM B88, Type L**] [**ASTM B88, Type M**]; [**cast-**] [**or**] [**wrought-**] copper solder-joint fittings; and [**brazed**] [**soldered**] joints.
2. Hard copper tube, [**ASTM B88, Type L**] [**or**] [**ASTM B88, Type M**]; grooved-joint copper-tube appurtenances; and grooved joints.
3. Galvanized steel pipe and nipples; galvanized, gray-iron threaded fittings; and threaded joints.
4. Galvanized steel pipe; grooved-joint, galvanized-steel-pipe appurtenances; and grooved joints.
5. CPVC, [**Schedule 40 pipe; CPVC, Schedule 40**] [**Schedule 80 pipe; CPVC, Schedule 80**] socket fittings; and solvent-cemented joints.
6. CPVC, Schedule 80 pipe; CPVC, Schedule 80 threaded fittings; and threaded joints.
7. PVC, [**Schedule 40 pipe; PVC, Schedule 40**] [**Schedule 80 pipe; PVC, Schedule 80**] socket fittings; and solvent-cemented joints.

K. Aboveground, combined domestic-water-service and fire-service-main piping, [**NPS 6 to NPS 12**] [**Insert pipe size range**], shall be [**one (1) of**] the following:

1. Plain-end, ductile-iron pipe; grooved-joint, ductile-iron-pipe appurtenances; and grooved joints.
2. Galvanized steel pipe and nipples; galvanized, gray-iron threaded fittings; and threaded joints.
3. Galvanized steel pipe; grooved-joint, galvanized-steel-pipe appurtenances; and grooved joints.

3.16 VALVE SCHEDULE

A. Drawings indicate valve types to be used. Where specific valve types are not indicated, the following requirements apply:

1. Shutoff Duty: Use ball or gate valves for piping NPS 2 and smaller. Use butterfly, ball, or gate valves with flanged ends for piping NPS 2-1/2 and larger.
2. Throttling Duty: Use ball or globe valves for piping NPS 2 and smaller. Use butterfly or ball valves with flanged ends for piping NPS 2-1/2 and larger.
3. Hot-Water Circulation Piping, Balancing Duty: [**Calibrated**] [**Memory-stop**] balancing valves.
4. Drain Duty: Hose-end drain valves.

B. Use check valves to maintain correct direction of domestic water flow to and from equipment.

C. Iron grooved-end valves may be used with grooved-end piping.

D. [**CPVC**] [**and**] [**PVC**] valves matching piping materials may be used.

END OF SECTION 22 11 16

SECTION 22 13 16 - SANITARY WASTE STORM AND VENT PIPING

PART 1 - GENERAL

1.1 RELATED DOCUMENTS

A. Drawings and general provisions of the Contract, including General and Supplementary Conditions and Division 01 specification sections, apply to this section.

1.2 SECTION INCLUDES

A. Pipe, tube, and fittings

B. Specialty pipe fittings.

C. Encasement for underground metal piping.

1.3 PERFORMANCE REQUIREMENTS

A. Components and installation shall be capable of withstanding the following minimum working pressure unless otherwise indicated:
   1. Soil, Waste, Storm and Vent Piping: 10-foot head of water.

B. Seismic Performance: Soil, waste, storm, and vent piping and support and installation shall withstand the effects of earthquake motions determined according to ASCE/SEI 7

1.4 SUBMITTALS

A. Submit under provisions of Section 01 33 00.

B. Product Data: For each type of product indicated.

C. Shop Drawings: For sovent drainage system. Include plans, elevations, sections, and details.

D. Seismic Qualification Certificates: For waste and vent piping, accessories, and components, from manufacturer.
   1. Basis for Certification: Indicate whether withstand certification is based on actual test of assembled components or on calculation.
   2. Detailed description of piping anchorage devices on which the certification is based and their installation requirements.

E. Field quality-control reports.

1.5 QUALITY ASSURANCE

A. Piping materials shall bear label, stamp, or other markings of specified testing agency.

1.6 PROJECT CONDITIONS

A. Interruption of Existing Sanitary Waste Service: Do not interrupt service to facilities occupied by Owner or others unless permitted under the following conditions and then only after arranging to provide temporary service according to requirements indicated:
   1. Notify Construction Manager no fewer than two (2) days in advance of proposed interruption of sanitary waste service.
   2. Do not proceed with interruption of sanitary waste service without Construction Manager's written permission.

PART 2 - PRODUCTS

2.1 PIPING MATERIALS

A. Comply with requirements in "Piping Schedule" article for applications of pipe, tube, fitting materials, and joining methods for specific services, service locations, and pipe sizes.

2.2 HUB-AND-SPIGOT, CAST-IRON SOIL PIPE AND FITTINGS

A. Pipe and Fittings: ASTM A74

B. Gaskets: ASTM C564, rubber.

C. Calking Materials: ASTM B29, pure lead and oakum or hemp fiber.

2.3 HUBLESS, CAST-IRON SOIL PIPE AND FITTINGS

A. Pipe and Fittings: ASTM A888 or CISPI 301.

B. Sovent Stack Fittings: ASME B16.45 or ASSE 1043, hubless, cast-iron aerator and deaerator drainage fittings.

C. Heavy-Duty, Hubless-Piping Couplings:
   1. Manufacturers: Subject to compliance with requirements, provide products by one (1) of the following:
      a. ANACO-Husky.
      b. Clamp-All Corp.
      c. Dallas Specialty & Mfg. Co.
      d. MIFAB, Inc.
      e. Mission Rubber Company; a division of MCP Industries, Inc.
      f. Stant.
      g. Tyler Pipe.
   2. Standards: ASTM C1277 and ASTM C1540.
   3. Description: Stainless steel shield with stainless steel bands and tightening devices; and ASTM C564, rubber sleeve with integral, center pipe stop.

2.4 DUCTILE-IRON PIPE AND FITTINGS

A. Ductile-Iron, Mechanical-Joint Piping:

1. Ductile-Iron Pipe: AWWA C151/A21.51, with mechanical-joint bell and plain spigot end unless grooved or flanged ends are indicated.
2. Ductile-Iron Fittings: AWWA C110/A21.10, mechanical-joint, ductile- or gray-iron standard pattern or AWWA C153/A21.53, ductile-iron compact pattern.
3. Glands, Gaskets, and Bolts: AWWA C111/A21.11, ductile- or gray-iron glands, rubber gaskets, and steel bolts.

B. Ductile-Iron, Push-on-Joint Piping:
1. Ductile-Iron Pipe: AWWA C151/A21.51, with push-on-joint bell and plain spigot end unless grooved or flanged ends are indicated.
2. Ductile-Iron Fittings: AWWA C110/A21.10, push-on-joint ductile- or gray-iron standard pattern or AWWA C153/A21.53, ductile-iron compact pattern.
3. Gaskets: AWWA C111/A21.11, rubber.

C. Ductile-Iron, Grooved-Joint Piping:
1. Ductile-Iron Pipe: AWWA C151/A21.51 with round-cut-grooved ends according to AWWA C606.
2. Ductile-Iron-Pipe Appurtenances:
a. Manufacturers: Subject to compliance with requirements, provide products by one (1) of the following:
1) Anvil International.
2) Shurjoint Piping Products.
3) Star Pipe Products.
4) Victaulic Company.
b. Grooved-End, Ductile-Iron Fittings: ASTM A536 ductile-iron castings with dimensions matching AWWA C110/A 21.10 ductile-iron pipe or AWWA C153/A 21.53 ductile-iron fittings and complying with AWWA C606 for grooved ends.
c. Grooved Mechanical Couplings for Ductile-Iron Pipe: ASTM F1476, Type I. Include ferrous housing sections with continuous curved keys; EPDM-rubber center-leg gasket suitable for hot and cold water; and bolts and nuts.

2.5 COPPER TUBE AND FITTINGS

A. Copper DWV Tube: ASTM B306, drainage tube, drawn temper.

B. Copper Drainage Fittings: ASME B16.23, cast copper or ASME B16.29, wrought copper, solder-joint fittings.

C. Hard Copper Tube: ASTM B88, Type L and Type M, water tube, drawn temper.

D. Soft Copper Tube: ASTM B88, Type L, water tube, annealed temper.

E. Copper Pressure Fittings:
1. Copper Fittings: ASME B16.18, cast-copper-alloy or ASME B16.22, wrought-copper, solder-joint fittings. Furnish wrought-copper fittings if indicated.
2. Copper Unions: MSS SP-123, copper-alloy, hexagonal-stock body with ball-and-socket, metal-to-metal seating surfaces, and solder-joint or threaded ends.

F. Copper Flanges: ASME B16.24, Class 150, cast copper with solder-joint end.
1. Flange Gasket Materials: ASME B16.21, full-face, flat, nonmetallic, asbestos-free, 1/8-inch maximum thickness unless thickness or specific material is indicated.
2. Flange Bolts and Nuts: ASME B18.2.1, carbon steel unless otherwise indicated.

G. Solder: ASTM B32, lead free with ASTM B813, water-flushable flux.

2.6 SPECIALTY PIPE FITTINGS

A. Transition Couplings:
1. General Requirements: Fitting or device for joining piping with small differences in OD's or of different materials. Include end connections same size as and compatible with pipes to be joined.
2. Fitting-Type Transition Couplings: Manufactured piping coupling or specified piping system fitting.
3. Unshielded, Non-pressure Transition Couplings:
a. Manufacturers: Subject to compliance with requirements, **[provide products by one (1) of the following:**
1) Dallas Specialty & Mfg. Co.
2) Fernco Inc.
3) Mission Rubber Company; a division of MCP Industries, Inc.
4) Plastic Oddities; a division of Diverse Corporate Technologies, Inc.
b. Standard: ASTM C1173.
c. Description: Elastomeric, sleeve-type, reducing or transition pattern. Include shear ring and corrosion-resistant-metal tension band and tightening mechanism on each end.
d. Sleeve Materials:
1) For Cast-Iron Soil Pipes: ASTM C564, rubber.
4. Shielded, Non-pressure Transition Couplings:
a. Manufacturers: Subject to compliance with requirements, **provide products by one (1) of the following**:
1) Cascade Waterworks Mfg. Co.
2) Mission Rubber Company; a division of MCP Industries, Inc.
b. Standard: ASTM C1460.
c. Description: Elastomeric or rubber sleeve with full-length, corrosion-resistant outer shield and corrosion-resistant-metal tension band and tightening mechanism on each end.
5. Pressure Transition Couplings:
a. Manufacturers: Subject to compliance with requirements, [**provide products by one (1) of the following**:
1) Cascade Waterworks Mfg. Co.
2) Dresser, Inc.
3) EBAA Iron, Inc.
4) JCM Industries, Inc.
5) Romac Industries, Inc.
6) Smith-Blair, Inc.; a Sensus company.
7) The Ford Meter Box Company, Inc.
8) Viking Johnson.
b. Standard: AWWA C219.
c. Description: Metal, sleeve-type same size as, with pressure rating at least equal to, and ends compatible with, pipes to be joined.
d. Center-Sleeve Material: **Manufacturer's standard**
e. Gasket Material: Natural or synthetic rubber.
f. Metal Component Finish: Corrosion-resistant coating or material.

B. Dielectric Fittings:
1. General Requirements: Assembly of copper alloy and ferrous materials with separating nonconductive insulating material. Include end connections compatible with pipes to be joined.
2. Dielectric Unions:

a. Manufacturers: Subject to compliance with requirements, **provide products by one (1) of the following**:
   1) Capitol Manufacturing Company.
   2) Central Plastics Company.
   3) Hart Industries International, Inc.
   4) Jomar International Ltd.
   5) Matco-Norca, Inc.
   6) McDonald, A. Y. Mfg. Co.
   7) Watts Regulator Co.; a division of Watts Water Technologies, Inc.
   8) Wilkins; a Zurn company.
b. Description:
   1) Standard: ASSE 1079.
   2) Pressure Rating: **125 psig** minimum at **180 degrees F**
   3) End Connections: Solder-joint copper alloy and threaded ferrous.

3. Dielectric Flanges:
   a. Manufacturers: Subject to compliance with requirements,
      1) Capitol Manufacturing Company.
      2) Central Plastics Company.
      3) Matco-Norca, Inc.
      4) Watts Regulator Co.; a division of Watts Water Technologies, Inc.
      5) Wilkins; a Zurn company.
   b. Description:
      1) Standard: ASSE 1079.
      2) Factory-fabricated, bolted, companion-flange assembly.
      3) Pressure Rating: **125 psig** minimum at **180 degrees F**
      4) End Connections: Solder-joint copper alloy and threaded ferrous; threaded solder-joint copper alloy and threaded ferrous.
4. Dielectric-Flange Insulating Kits:
   a. Manufacturers: Subject to compliance with requirements, **provide products by one (1) of the following**:
      1) Advance Products & Systems, Inc.
      2) Calpico, Inc.
      3) Central Plastics Company.
      4) Pipeline Seal and Insulator, Inc.
   b. Description:
      1) Non-conducting materials for field assembly of companion flanges.
      2) Pressure Rating: **150 psig**
      3) Gasket: Neoprene or phenolic.
      4) Bolt Sleeves: Phenolic or polyethylene.
      5) Washers: Phenolic with steel backing washers.
5. Dielectric Nipples:
   a. Manufacturers: Subject to compliance with requirements, **provide products by one (1) of the following**
      1) Elster Perfection.
      2) Grinnell Mechanical Products.
      3) Matco-Norca, Inc.
      4) Precision Plumbing Products, Inc.
      5) Victaulic Company.
   b. Description:
      1) Standard: IAPMO PS 66
      2) Electroplated steel nipple.
      3) Pressure Rating: 300 psig at 225 degrees F
      4) End Connections: Male threaded or grooved.
      5) Lining: Inert and noncorrosive, propylene.

PART 3 - EXECUTION

3.1 EARTH MOVING

A. Comply with requirements for excavating, trenching, and backfilling specified in Section 31 20 00.

3.2 PIPING INSTALLATION

A. Drawing plans, schematics, and diagrams indicate general location and arrangement of piping systems. Indicated locations and arrangements were used to size pipe and calculate friction loss, expansion, pump sizing, and other design considerations. Install piping as indicated unless deviations to layout are approved on coordination drawings.

B. Install piping in concealed locations unless otherwise indicated and except in equipment rooms and service areas.

C. Install piping indicated to be exposed and piping in equipment rooms and service areas at right angles or parallel to building walls. Diagonal runs are prohibited unless specifically indicated otherwise.

D. Install piping above accessible ceilings to allow sufficient space for ceiling panel removal.

E. Install piping to permit valve servicing.

F. Install piping at indicated slopes.

G. Install piping free of sags and bends.

H. Install fittings for changes in direction and branch connections.

I. Install piping to allow application of insulation.

J. Install seismic restraints on piping. Comply with requirements for seismic-restraint devices specified in Section 22 05 48.

K. Make changes in direction for soil and waste drainage and vent piping using appropriate branches, bends, and long-sweep bends. Sanitary tees and short-sweep 1/4 bends may be used on vertical stacks if change in direction of flow is from horizontal to vertical. Use long-turn, double Y-branch and 1/8-bend fittings if two (2) fixtures are installed back to back or side by side with common drain pipe. Straight tees, elbows, and crosses may be used on vent lines. Do not change direction of flow more than 90 degrees. Use proper size of standard increasers and reducers if pipes of different sizes are connected. Reducing size of drainage piping in direction of flow is prohibited.

L. Lay buried building drainage piping beginning at low point of each system. Install true to grades and alignment indicated, with unbroken continuity of invert. Place hub ends of piping upstream. Install required gaskets according to manufacturer's written instructions for use of lubricants, cements, and other installation requirements. Maintain swab in piping and pull past each joint as completed.

M. Install soil and waste drainage and vent piping at the following minimum slopes unless otherwise indicated:

1. Building Sanitary Drain: Two (2) percent downward in direction of flow for piping NPS 2 and smaller; **1 percent** downward in direction of flow for piping NPS 3 and larger.
2. Horizontal Sanitary Drainage Piping: One **(1) percent**] downward in direction of flow.
3. Vent Piping: **1 percent** down toward vertical fixture vent or toward vent stack.

N. Install cast-iron soil piping according to CISPI's "Cast Iron Soil Pipe and Fittings Handbook," Chapter IV, "Installation of Cast Iron Soil Pipe and Fittings."
1. Install encasement on underground piping according to ASTM A674 or AWWA C105/A 21.5.

O. Install steel piping according to applicable plumbing code.

P. Install stainless-steel piping according to ASME A112.3.1 and applicable plumbing code.

Q. Install aboveground copper tubing according to CDA's "Copper Tube Handbook."

R. Install engineered soil and waste drainage and vent piping systems as follows:
1. Combination Waste and Vent: Comply with standards of authorities having jurisdiction.
2. Sovent Drainage System: Comply with ASSE 1043 and sovent fitting manufacturer's written installation instructions.
3. Reduced-Size Venting: Comply with standards of authorities having jurisdiction.

S. Install underground, ductile-iron, force-main piping according to AWWA C600. Install buried piping inside building between wall and floor penetrations and connection to sanitary sewer piping outside building with restrained joints. Anchor pipe to wall or floor. Install thrust-block supports at vertical and horizontal offsets.
1. Install encasement on piping according to ASTM A674 or AWWA C105/A 21.5.

T. Install underground, copper, force-main tubing according to CDA's "Copper Tube Handbook."
1. Install encasement on piping according to ASTM A674 or AWWA C105/A 21.5.

U. Install force mains at elevations indicated.

V. Plumbing Specialties:
1. Install backwater valves in sanitary waster gravity-flow piping. Comply with requirements for backwater valves specified in Section 22 13 19.
2. Install cleanouts at grade and extend to where building sanitary drains connect to building sanitary sewers in sanitary drainage gravity-flow piping. Install cleanout fitting with closure plug inside the building in sanitary drainage force-main piping. Comply with requirements for cleanouts specified in Section 22 13 19.
3. Install drains in sanitary drainage gravity-flow piping. Comply with requirements for drains specified in Section 22 13 19.

W. Do not enclose, cover, or put piping into operation until it is inspected and approved by authorities having jurisdiction.

X. Install sleeves for piping penetrations of walls, ceilings, and floors. Comply with requirements for sleeves specified in Section 22 05 17.

Y. Install sleeve seals for piping penetrations of concrete walls and slabs. Comply with requirements for sleeve seals specified in Section 22 05 17.

Z. Install escutcheons for piping penetrations of walls, ceilings, and floors. Comply with requirements for escutcheons specified in Section 22 05 18.

3.3 JOINT CONSTRUCTION

A. Join hub-and-spigot, cast-iron soil piping with gasket joints according to CISPI's "Cast Iron Soil Pipe and Fittings Handbook" for compression joints.

B. Join hub-and-spigot, cast-iron soil piping with calked joints according to CISPI's "Cast Iron Soil Pipe and Fittings Handbook" for lead-and-oakum calked joints.

C. Join hubless, cast-iron soil piping according to CISPI 310 and CISPI's "Cast Iron Soil Pipe and Fittings Handbook" for hubless-piping coupling joints.

D. Threaded Joints: Thread pipe with tapered pipe threads according to ASME B1.20.1. Cut threads full and clean using sharp dies. Ream threaded pipe ends to remove burrs and restore full ID. Join pipe fittings and valves as follows:
   1. Apply appropriate tape or thread compound to external pipe threads unless dry seal threading is specified.
   2. Damaged Threads: Do not use pipe or pipe fittings with threads that are corroded or damaged. Do not use pipe sections that have cracked or open welds.

E. Join stainless-steel pipe and fittings with gaskets according to ASME A112.3.1.

F. Join copper tube and fittings with soldered joints according to ASTM B828. Use ASTM B813, water-flushable, lead-free flux and ASTM B32, lead-free-alloy solder.

G. Grooved Joints: Cut groove ends of pipe according to AWWA C606. Lubricate and install gasket over ends of pipes or pipe and fitting. Install coupling housing sections, over gasket, with keys seated in piping grooves. Install and tighten housing bolts.

H. Flanged Joints: Align bolt holes. Select appropriate gasket material, size, type, and thickness. Install gasket concentrically positioned. Use suitable lubricants on bolt threads. Torque bolts in cross pattern.

3.4 VALVE INSTALLATION

A. General valve installation requirements are specified in Section 22 05 23.

B. Shutoff Valves:
   1. Install shutoff valve on each sewage pump discharge.
   2. Install gate or full-port ball valve for piping NPS 2 and smaller.
   3. Install gate valve for piping NPS 2-1/2 and larger.

C. Check Valves: Install swing check valve, between pump and shutoff valve, on each sewage pump discharge.

D. Backwater Valves: Install backwater valves in piping subject to backflow.
   1. Horizontal Piping: Horizontal backwater valves.
   2. Floor Drains: Drain outlet backwater valves unless drain has integral backwater valve.
   3. Install backwater valves in accessible locations.
   4. Comply with requirements for backwater valve specified in Section 22 13 19.

3.5 HANGER AND SUPPORT INSTALLATION

A. Comply with requirements for seismic-restraint devices specified in Section 22 05 48.

B. Comply with requirements for pipe hanger and support devices and installation specified in Section 22 05 29.
   1. Install carbon steel pipe hangers for horizontal piping in noncorrosive environments.
   2. Install stainless steel pipe hangers for horizontal piping in corrosive environments.
   3. Install carbon steel pipe support clamps for vertical piping in noncorrosive environments.
   4. Install stainless-steel pipe support clamps for vertical piping in corrosive environments.
   5. Vertical Piping: MSS Type 8 or Type 42, clamps.
   6. Install individual, straight, horizontal piping runs:
      a. 100 Feet and Less: MSS Type 1, adjustable, steel clevis hangers.
      b. Longer Than 100 Feet: MSS Type 43, adjustable roller hangers.
      c. Longer Than 100 Feet if Indicated: MSS Type 49, spring cushion rolls.
   7. Multiple, Straight, Horizontal Piping Runs 100 Feet or Longer: MSS Type 44, pipe rolls. Support pipe rolls on trapeze.
   8. Base of Vertical Piping: MSS Type 52, spring hangers.

C. Support horizontal piping and tubing within 12 inches of each fitting[**, valve,**] and coupling.

D. Support vertical piping and tubing at base and at each floor.

E. Rod diameter may be reduced one (1) size for double-rod hangers, with 3/8-inch minimum rods.

F. Install hangers for cast-iron soil piping with the following maximum horizontal spacing and minimum rod diameters:
   1. NPS 1-1/2 and NPS 2: 60 inches with 3/8-inch rod.
   2. NPS 3: 60 inches with 1/2-inch rod.
   3. NPS 4 and NPS 5: 60 inches with 5/8-inch rod.
   4. NPS 6 and NPS 8: 60 inches with 3/4-inch rod.
   5. NPS 10 and NPS 12: 60 inches with 7/8-inch rod.
   6. Spacing for 10-foot lengths may be increased to 10 feet. Spacing for fittings is limited to 60 inches.

G. Install supports for vertical cast-iron soil piping every 15 feet.

H. Install hangers for steel piping with the following maximum horizontal spacing and minimum rod diameters:
   1. NPS 1-1/4: 84 inches with 3/8-inch rod.
   2. NPS 1-1/2: 108 inches with 3/8-inch rod.
   3. NPS 2: 10 feet with 3/8-inch rod.
   4. NPS 2-1/2: 11 feet with 1/2-inch rod.
   5. NPS 3: 12 feet with 1/2-inch rod.
   6. NPS 4 and NPS 5: 12 feet with 5/8-inch rod.
   7. NPS 6 and NPS 8: 12 feet with 3/4-inch rod.
   8. NPS 10 and NPS 12: 12 feet with 7/8-inch rod.

I. Install supports for vertical steel piping every 15 feet.

J. Install hangers for stainless steel piping with the following maximum horizontal spacing and minimum rod diameters:
   1. NPS 2: 84 inches with 3/8-inch rod.
   2. NPS 3: 96 inches with 1/2-inch rod.
   3. NPS 4: 108 inches with 1/2-inch rod.
   4. NPS 6: 10 feet with 5/8-inch rod.

K. Install supports for vertical stainless-steel piping every 10 feet.

L. Install hangers for copper tubing with the following maximum horizontal spacing and minimum rod diameters:
   1. NPS 1-1/4: 72 inches with 3/8-inch rod.
   2. NPS 1-1/2 and NPS 2: 96 inches with 3/8-inch rod.
   3. NPS 2-1/2: 108 inches with 1/2-inch rod.
   4. NPS 3 and NPS 5: 10 feet with 1/2-inch rod.
   5. NPS 6: 10 feet with 5/8-inch rod.
   6. NPS 8: 10 feet with 3/4-inch rod.

M. Install supports for vertical copper tubing every 10 feet.

N. Support piping and tubing not listed above according to MSS SP-69 and manufacturer's written instructions.

3.6 CONNECTIONS

A. Drawings indicate general arrangement of piping, fittings, and specialties.

B. Connect soil and waste piping to exterior sanitary sewerage piping. Use transition fitting to join dissimilar piping materials.

C. Connect drainage and vent piping to the following:
   1. Plumbing Fixtures: Connect drainage piping in sizes indicated, but not smaller than required by plumbing code.
   2. Plumbing Fixtures and Equipment: Connect atmospheric vent piping in sizes indicated, but not smaller than required by authorities having jurisdiction.
   3. Plumbing Specialties: Connect drainage and vent piping in sizes indicated, but not smaller than required by plumbing code.
   4. Install test tees (wall cleanouts) in conductors near floor and floor cleanouts with cover flush with floor.
   5. Comply with requirements for cleanout and drains specified in Section 22 13 19."
   6. Equipment: Connect drainage piping as indicated. Provide shutoff valve if indicated and union for each connection. Use flanges instead of unions for connections NPS 2-1/2 and larger.

D. Connect force-main piping to the following:
   1. Sanitary Sewer: To exterior force main.
   2. Sewage Pump: To sewage pump discharge.

E. Where installing piping adjacent to equipment, allow space for service and maintenance of equipment.

F. Make connections according to the following unless otherwise indicated:
   1. Install unions, in piping NPS 2 and smaller, adjacent to each valve and at final connection to each piece of equipment.
   2. Install flanges, in piping NPS 2-1/2 and larger, adjacent to flanged valves and at final connection to each piece of equipment.

3.7 IDENTIFICATION

A. Identify exposed sanitary waste and vent piping. Comply with requirements for identification specified in Section 22 05 53.

3.8 FIELD QUALITY CONTROL

A. During installation, notify authorities having jurisdiction at least 24 hours before inspection must be made. Perform tests specified below in presence of authorities having jurisdiction.
   1. Roughing-in Inspection: Arrange for inspection of piping before concealing or closing-in after roughing-in and before setting fixtures.
   2. Final Inspection: Arrange for final inspection by authorities having jurisdiction to observe tests specified below and to ensure compliance with requirements.

B. Reinspection: If authorities having jurisdiction find that piping will not pass test or inspection, make required corrections and arrange for reinspection.

C. Reports: Prepare inspection reports and have them signed by authorities having jurisdiction.

D. Test sanitary drainage and vent piping according to procedures of authorities having jurisdiction or, in absence of published procedures, as follows:
   1. Test for leaks and defects in new piping and parts of existing piping that have been altered, extended, or repaired. If testing is performed in segments, submit separate report for each test, complete with diagram of portion of piping tested.
   2. Leave uncovered and unconcealed new, altered, extended, or replaced drainage and vent piping until it has been tested and approved. Expose work that was covered or concealed before it was tested.
   3. Roughing-in Plumbing Test Procedure: Test drainage and vent piping except outside leaders on completion of roughing-in. Close openings in piping system and fill with water to point of overflow, but not less than 10-foot head of water. From 15 minutes before inspection starts to completion of inspection, water level must not drop. Inspect joints for leaks.
   4. Finished Plumbing Test Procedure: After plumbing fixtures have been set and traps filled with water, test connections and prove they are gastight and watertight. Plug vent-stack openings on roof and building drains where they leave building. Introduce air into piping system equal to pressure of 1-inch wg. Use U-tube or manometer inserted in trap of water closet to measure this pressure. Air pressure must remain constant without introducing additional air throughout period of inspection. Inspect plumbing fixture connections for gas and water leaks.
   5. Repair leaks and defects with new materials and retest piping, or portion thereof, until satisfactory results are obtained.
   6. Prepare reports for tests and required corrective action.

E. Test force-main piping according to procedures of authorities having jurisdiction or, in absence of published procedures, as follows:
   1. Leave uncovered and unconcealed new, altered, extended, or replaced force-main piping until it has been tested and approved. Expose work that was covered or concealed before it was tested.
   2. Cap and subject piping to static-water pressure of 50 psig above operating pressure, without exceeding pressure rating of piping system materials. Isolate test source and allow to stand for four (4) hours. Leaks and loss in test pressure constitute defects that must be repaired.
   3. Repair leaks and defects with new materials and retest piping, or portion thereof, until satisfactory results are obtained.
   4. Prepare reports for tests and required corrective action.

3.9 CLEANING AND PROTECTION

A. Clean interior of piping. Remove dirt and debris as work progresses.

B. Protect drains during remainder of construction period to avoid clogging with dirt and debris and to prevent damage from traffic and construction work.

C. Place plugs in ends of uncompleted piping at end of day and when work stops.

3.10 PIPING SCHEDULE

A. See drawing for piping schedule list.

END OF SECTION 22 13 16

SECTION 22 16 00 - NATURAL GAS PIPING SYSTEM

PART 1 - GENERAL

1.1 SYSTEM

A. Provide a complete system of natural gas piping from gas meter to all natural gas burning equipment and appliances.

B. All gas equipment specified herein shall be suitable for use with natural gas system.

1.2 DESIGN STANDARDS

A. All work shall conform to all ordinances and regulations of the City, County, State and/or other authorities having jurisdiction.
B. See the code information identified elsewhere in the documents for applicable year/edition of each code.

PART 2 - PRODUCTS

2.1 PIPE AND FITTINGS

A. Underground Piping
1. Schedule 40 black steel pipe, ASTM A53 with polyethylene jacket, welded joints and standard weight black steel butt weld or socket weld fittings, ASTM A243.
2. Polyethylene pipe, ASTM 2513, with heat fusion joints and fittings, ASTM D2513.

B. Aboveground Piping
1. Schedule 40 black steel pipe, ASTM A53 with welded joints and standard weight black steel butt weld fittings, ASTM A234 or socket weld fittings, ASTM A105, for all piping concealed in walls or above ceiling, all medium pressure piping and 2.5 inch or larger piping.
2. Schedule 40 black steel pipe, ASTM A53, with 150 pound steel slip-on welding flanges, ASTM A181, for connection to flanged valves and equipment.
3. Schedule 40 black steel pipe, ASTM A53, with screwed joints and 150 pound threaded malleable iron fittings, ASME B.16.3, for all low pressure piping exposed to view and 2 inch or smaller piping.

2.2 JOINTS

A. Threaded joints shall be made with a pipe compound specifically listed as resistant to reaction with liquefied petroleum gas and shall be applied to male threads only. After cutting and prior to threading, pipe shall be reamed and shall have burrs removed.

B. Welded joints shall be fusion welded in accordance with the American Standards Code for pressure pipe, ASME B31.1, Section 6.

C. Flanged joints shall be faced true, provided with ring type gasket, and made square and tight. Flanges shall have raised or flat faces to mate with adjacent flanges of valves.

2.3 UNIONS

A. Unions in steel piping shall be 150 pound socket welded carbon steel conforming to ASME B.16.11 or class 150 malleable iron threaded fittings conforming to ASME B.16.3.

2.4 VALVES

A. Valves 3" in size and larger shall be semi-steel plug valves with cast iron body, lubricated cast iron plug, flanged ends, and wrench operated for 175 pound WOG. Valve shall be Rockwell Nordstrom Fig. 143 or equal.

B. Valves 2-1/2" in size and smaller shall have bronze body and plug, socket welded ends, and square head for 125 WOG. Valve shall be Crane or Fig. 250 or equal.

C. Full port ball valves 2" in size and smaller shall have brass body with chrome plated brass ball with threaded or socket welded ends, 600 psi WOG, FM approval, AGA approval. Valve shall be Watts series FBV-3 or equal.

D. Lubricated plug valves shall be lubricated at the factory and sealant shall be suitable for natural gas. Provide two valve wrenches for each type of valve specified.

E. Acceptable valve manufacturers are Rockwell Nordstrom, Crane, FNW, Stockham, Powell, Walworth, or Milwaukee.

2.5 PRESSURE REGULATING VALVES

A. Pressure regulator shall be cast iron, ductile iron or stainless steel, corrosion-resistant spring-loaded type with internal pressure relief, 175 psi working pressure. Provide threaded ends for piping 2" and smaller, flanged ends for piping 2-1/2" and larger. All regulator vents shall be extended to the exterior unless otherwise specified. Regulators equipped with and labeled for use with an approved vent-limiting device shall not require a vent to the exterior. Acceptable manufacturers are Fischer Regulators, Jordan Valve, Maxitrol, Rockwell and Sensus.

B. Low pressure regulators supplied from medium and high pressure gas systems shall be lock-up type high gas pressure regulators and shall be installed a minimum of ten feet upstream of the equipment inlet connection.

C. Where low pressure line regulators have inlet pressures exceeding 2 psi, a downstream over-pressure protection device (OPD) shall be installed in accordance with ANSI Z21.80.

D. Medium pressure regulators shall have a capped tee fitting (sediment trap) upstream from the regulator and a capped tee fitting installed not less than 10 pipe diameters downstream of the regulator.

2.6 PROTECTIVE COATING

A. Underground steel service entry piping shall be furnished with factory applied plastic coating and field coating at joints conforming to AWWA Standard C-203. All valves, fittings, and joints in underground piping shall be field coated using a heat-applied coal tar enamel tape, using two coats of heavy mastic, using “Scotchwrap,” “CT Tapecoat” or “X-Tru-Tape.” Field coating shall extend over mill wrapping a minimum of 4 inches. Damaged coating shall be repaired as specified for valves, fittings, and joints.

2.7 CATHODIC PROTECTION

A. All underground gas piping shall be cathodically protected. Provide a minimum of two 17-pound magnesium anodes containing 6% aluminum and 3% zinc alloy. Anodes shall be distributed equally along the pipe run, but spacing shall not exceed 100 feet between anodes. Each anode shall be attached to the pipe by the Caldwell or brazing process. The connecting wire shall be buried in backfill composed of 75% gypsum, 20% bentonite and 5% sodium sulphate. Wherever the underground gas piping rises above grade, provide an insulating dielectric fitting.

2.8 PIPE SUPPORTS & HANGERS

A. All piping shall be supported by means of hanger rods and pipe hangers from roof or floor construction using supplementary steel and/or lagbolts.

1. Piping shall be supported from new steel construction with Anvil International Fig. 131 beam clamp, Fig. 61 beam clamp, Fig. 66 welded beam attachment or Fig. 60 washer plate with all-thread rod.
2. Piping and brackets shall be supported from hollow block construction using masonry drilled holes and toggle bolts.

3. Piping shall be supported from wood truss construction with plated lag screws or bolts, B- 3227 and B-3228.

B. Unless otherwise noted, hangers and clamps shall be as listed below (all model numbers noted are B-Line Systems):
   1. Gas pipe – B3100 or B3109.
   2. All supports and mounting hardware are to be galvanized or cadmium plated.

C. Maximum spacing between pipe hangers shall be:
   1. 1/2": 6'-0"
   2. 3/4"-1": 8'-0"
   3. 1-1/4" and larger: 10'-0"

D. At least one hanger shall occur within two feet (2'-0") from where a change in direction takes place in the line. Where pipes extend down or up to other floors, pipe clamps shall be provided on each floor to support pipe. Equal manufacturers for hangers and clamps are B-Line Systems, Anvil International, Fee and Mason, PHD Manufacturing, or approved equal.

E. Piping on roofs shall be limited to branch piping to each piece of equipment and supported every six feet on piping 1/2" size, eight feet on piping 3/4" – 1" size, and ten feet on piping 1-1/4" and larger, and at each change in direction, with pipe stands secured to the roof per the roofing manufacturer's installation requirements. Pipe stands shall be DURA-BLOK DB10 or approved equal.

PART 3 - EXECUTION

3.1 INSTALLATION

A. All interior gas systems shall be bonded to the building's grounding system per the requirements of NEC Section 250. A written statement bearing the names and signatures of the plumbing and electrical contractors indicating compliance with the NEC grounding requirements is to be submitted prior to project close-out.

B. A valved union shall be provided at each connection to a piece of equipment. Equipment provided with a flanged inlet shall have a flanged connection.

C. All valves installed in horizontal lines shall be installed with the stems horizontal or above.

D. All gas piping shall be graded at the maximum slope available to prevent traps. All horizontal lines shall slope to risers and from the risers to the meter or appliance.

E. Drip legs, 6" long, shall be provided in gas piping at ends of horizontal runs, at the base of risers, and at connections to equipment.

F. Provide pressure regulators at all required connections to equipment; regulators shall be provided at the pressure required by the equipment served. Extend all pressure regulator vents individually to the exterior per local code authority requirements.

G. Branch piping shall be taken off the top or sides of horizontal lines, but not from the bottom.

H. Changes in pipe size shall be made with reducing fittings. No bushings will be allowed.

I. No gas piping shall be placed underground inside the building.

J. Main gas piping shall be installed inside the building and routed within the joist space.

K. All interior and exterior ferrous metal gas piping, fittings and supports shall be primed and painted with two (2) coats of exterior grade enamel paint. The paint color shall be Safety Yellow.

L. Underground Piping

1. General:
   a. Lay, align, anchor and test pipe and make-up joints. Perform excavating, cleaning, laying, jointing and backfilling as concurrently as possible to maintain uniform installation. Replace or repair damaged materials to condition equal to new material.
2. Excavation and Backfilling:
   a. Care shall be taken not to excavate below depth necessary.
   b. Do not leave unjointed piping in trench overnight. Backfill trenches by filling and tamping in not more than 6" layers after pipes, tanks, or other structures have been installed, tested and approved.
3. Pipe Crossing:
   a. Lay lower pipe, backfill with crushed stone, gravel or concrete as directed and thoroughly compact to level of upper pipe.

3.2 TESTING

A. All piping is to be inspected and purged per the requirements of NFPA 54 and the local authorities' requirements.

B. The entire gas piping system shall be tested with compressed air to 100 psi for a period of two
(2) hours.

C. Defective joints or piping shall be replaced as required and the system shall then be re-tested.

END OF SECTION 22 16 00

SECTION 22 42 00 - COMMERCIAL PLUMBING FIXTURES

PART 1 - GENERAL

1.1 RELATED DOCUMENTS

A. Drawings and general provisions of the Contract, including General and Supplementary Conditions and Division 01 specification sections, apply to this section.

1.2 SECTION INCLUDES

A. Water closets.

B. Toilet seats.

C. Urinals.

D. Lavatories.

E. Service basins.

F. General Sinks

G. Flushometer valves.

H. Lavatory and sink faucets.

I. Supply fittings.

J. Waste fittings.

1.3 ACTION SUBMITTALS

A. Submit under provisions of Section 01 4000

B. Product Data: For each type of product.
   1. Include construction details, material descriptions, dimensions of individual components and profiles, and finishes for fixtures.
   2. Include rated capacities, operating characteristics, and furnished specialties and accessories.

1.4 INFORMATIONAL SUBMITTALS

A. Submit under provisions of Section 01 4000.

B. Coordination Drawings: Counter cutout templates for mounting of counter-mounted lavatories and sinks.

1.5 CLOSEOUT SUBMITTALS

A. Submit under provisions of Section 01 4000.

B. Operation and Maintenance Data: For flushometer valves, lavatories, sinks, faucets, and shower faucets to include in operation and maintenance manuals.
   1. In addition to items specified in Section 01 78 23, include the following:
      a. Servicing and adjustments of automatic faucets.

1.6 MAINTENANCE MATERIAL SUBMITTALS

A. Submit under provisions of Section 01 4000.

B. Furnish extra materials that match products installed and that are packaged with protective covering for storage and identified with labels describing contents.
   1. Flushometer-Valve Repair Kits: Equal to 10 percent of amount of each type installed, but no fewer than 6 of each type.
   2. Faucet Washers and O-Rings: Equal to 10 percent of amount of each type and size installed.
   3. Faucet Cartridges and O-Rings: Equal to 5 percent of amount of each type and size installed.

PART 2 - PRODUCTS

2.1 WALL-MOUNTED WATER CLOSETS

A. Water Closets: Wall mounted, back spud.
   1. Manufacturers: Subject to compliance with requirements, provide products by the following:
   2. Basis-of-Design Product: Subject to compliance with requirements, provide product indicated on Drawings or comparable product by one (1) of the following:
      a. American Standard America.
      b. Gerber Plumbing Fixtures LLC.
      c. Kohler Co.
      d. TOTO USA, INC.
      e. Zurn Industries, LLC; Commercial Brass and Fixtures.
      f.
   3. Support:
      a. Standard: ASME A112.6.1M.
      b. Description: Waste-fitting assembly as required to match drainage piping material and arrangement with faceplates, couplings gaskets, and feet; bolts and hardware matching fixture.

2.2 TOILET SEATS

A. Toilet Seats:
   1. Manufacturers: Subject to compliance with requirements, provide products by the following:
   2. Basis-of-Design Product: Subject to compliance with requirements, provide product indicated on Drawings or comparable product by one (1) of the following:
      a. American Standard America.
      b. Bemis Manufacturing Company.
      c. Centoco Manufacturing Corporation.
      d. Church Seats.
      e. Jones Stephens Corp.; Comfort Seat Brand.
      f. Kohler Co.
      g. Olsonite Seat Co.

h. Sanderson Plumbing Products, Inc.
i. Sperzel of Lexington.
j. TOTO USA, INC.
k. Zurn Industries, LLC; Commercial Brass and Fixtures.

2.3 WALL-HUNG URINALS

A. Urinals: Wall hung, back outlet.
1. Manufacturers: Subject to compliance with requirements, provide products by the following:
2. Basis-of-Design Product: Subject to compliance with requirements, provide product indicated on or comparable product by one (1) of the following:
   a. American Standard America.
   b. Briggs Plumbing Products, Inc.
   c. Capizzi.
   d. Crane Plumbing, L.L.C.
   e. Duravit USA, Inc.
   f. Ferguson Enterprises, Inc.; ProFlo Brand.
   g. Gerber Plumbing Fixtures LLC.
   h. Kohler Co.
   i. Mansfield Plumbing Products LLC.
   j. Peerless Pottery Sales, Inc.
   k. TOTO USA, INC.
3. Fixture:
   a. Standards: ASME A112.19.2/CSA B45.1 and ASME A112.19.5.
   b. Material: Vitreous china.
   c. Type: Washout with extended shields.
   d.
4. Waste Fitting:
   a. Standard: ASME A112.18.2/CSA B125.2 for coupling.
   b. Size: NPS 2.
5. Support: ASME A112.6.1M, Type I, urinal carrier with fixture support plates and coupling with seal and fixture bolts and hardware matching fixture.

2.4 COUNTER-MOUNTED LAVATORIES

A. Lavatory: Wall mounted 3 station lavatory, constructed of a seamless one-piece rectilinear solid surface bowl with center contour and individual drains, integral overflows.
1. Basis of Design Manufacturer/Model: Bradley, Express Deck Lavatory System, ELX-Series Model No. ELX-3.
2. Product Compliance:
   a. ADA / ICC ANSI A117.1.
   b. IAPMO IGC 156and requirements of CSA B45.5/IAPMO Z124 and ASME A112.18.1/CSA B125.1.
   c. NSF/ANSI 372.
3. Overall Unit Size: 85 by 21-5/8 inches (2286 by 549 mm) with 3 bowls.
4. Basksplash: integral 2-1/2 inches (63.5 mm) coved backsplash.
5. Bowl/Deck Color: By Architect
6. Drain Connection: [chrome-plated combined waste assembly][polypropylene combined waste assembly].
7. Faucet: Bradley Verge Crestt Series Model S53-3100.
8. Water Supply: Thermostatic mixing valve assembly.
9. Trap enclosure Color: Coal.

2.5 WALL-MOUNTED LAVATORIES

A. Lavatory: Vitreous china, wall mounted.
   1. Manufacturers: Subject to compliance with requirements, provide products by the following:
   2. Basis-of-Design Product: Subject to compliance with requirements, provide product indicated on Drawings or comparable product by one (1) of the following:
      a. American Standard America.
      b. Kohler Co.
      c. Zurn Industries, LLC; Commercial Brass and Fixtures.
      d. Sloan
      e. Acorn
   3. Fixture:
      a. Standard: ASME A112.19.2/CSA B45.1.
      b. Type: For wall hanging.
      c. Mounting Material: Chair carrier.
   4. Support: ASME A112.6.1M

2.6 SERVICE BASINS

A. Service Basins : floor mounted.
   1. Manufacturers: Subject to compliance with requirements, provide products by the following:
   2. Basis-of-Design Product: Subject to compliance with requirements, provide product indicated on or comparable product by one (1) of the following:
      a. Crane Plumbing, L.L.C.
      b. Ferguson Enterprises, Inc.; ProFlo Brand.
      c. Florestone Products Co., Inc.
      d. Mustee, E. L., & Sons, Inc.
      e. Swan Corporation (The).
      f. Zurn Industries, LLC; Light Commercial Specialty Plumbing Products.
   3. Fixture:
      a. Standard: IAPMO/ANSI Z124.6.
   4. Mounting: On floor and flush to wall.

2.7 GENERAL SINKS

A. General Sinks : Stainless steel, wall mounted.
   1. Manufacturers: Subject to compliance with requirements, provide products by the following:
   2. Basis-of-Design Product: Subject to compliance with requirements, provide product indicated on Drawings or comparable product by one (1) of the following:
      a. Advance Tabco.
      b. AERO Manufacturing Company.
      c. Amtekco Industries, Inc.
      d. Eagle Group; Foodservice Equipment Division.
      e. Elkay Manufacturing Co.
      f. Griffin Products, Inc.
      g. Just Manufacturing.
   3. Fixture:
      a. Standards: ASME A112.19.3/CSA B45.4 and NSF/ANSI 2.
      b. Type: Basin with radius corners, back for faucet, and support brackets.
      c.
   4. Supply Fittings: Comply with requirements in "Supply Fittings" article.

5. Waste Fittings: Comply with requirements in "Waste Fittings" article.
6. Support: ASME A112.6.1M, Type II, sink carrier.

2.8 WATER CLOSET FLUSHOMETER VALVES

A. Diaphragm Flushometer Valves :
1. Manufacturers: Subject to compliance with requirements, provide products by the following:
2. Basis-of-Design Product: Subject to compliance with requirements, provide product indicated on Drawings or comparable product by one (1) of the following:
   a. Coyne & Delany Co.
   b. Gerber Plumbing Fixtures LLC.
   c. Sloan Valve Company.
   d. Zurn Industries, LLC; Commercial Brass and Fixtures.
3. Standard: ASSE 1037.
4. Minimum Pressure Rating: 125 psig.
5. Features: Include integral check stop and backflow-prevention device.
6. Material: Brass body with corrosion-resistant components.
7. Exposed Flushometer-Valve Finish: Chrome plated.
8. Panel Finish: Chrome plated or stainless steel.

2.9 URINAL FLUSHOMETER VALVES

A. Diaphragm Flushometer Valves:
1. Manufacturers: Subject to compliance with requirements, provide products by the following:
2. Basis-of-Design Product: Subject to compliance with requirements, provide product indicated on Drawings or comparable product by one (1) of the following:
   a. Coyne & Delany Co.
   b. Gerber Plumbing Fixtures LLC.
   c. Sloan Valve Company.
   d. Zurn Industries, LLC; Commercial Brass and Fixtures.
3. Standard: ASSE 1037.
4. Minimum Pressure Rating: 125 psig.
5. Features: Include integral check stop and backflow-prevention device.
6. Material: Brass body with corrosion-resistant components.
7. Exposed Flushometer-Valve Finish: Chrome plated.
8. Panel Finish: Chrome plated or stainless steel.

2.10 LAVATORY AND SINK FAUCETS

A. NSF Standard: Comply with NSF/ANSI 61, "Drinking Water System Components - Health Effects," for faucet materials that will be in contact with potable water.
1. Manufacturers: Subject to compliance with requirements, provide products by the following:
2. Basis-of-Design Product: Subject to compliance with requirements, provide product indicated on Drawings or comparable product by one (1) of the following:
   a. American Standard America.
   b. Bradley Corporation.
   c. Chicago Faucets.
   d. Gerber Plumbing Fixtures LLC.
   e. Grohe America, Inc.
   f. Hydrotek International, Inc.

g. Kohler Co.
h. Moen Incorporated.
i. Sloan Valve Company.
j. Speakman Company.
k. T & S Brass and Bronze Works, Inc.
l. TOTO USA, INC.
m. Zurn Industries, LLC; Commercial Brass and Fixtures.

3. Standards: ASME A112.18.1/CSA B125.1 and UL 1951.
4. Electrical Components, Devices, and Accessories: Listed and labeled as defined in NFPA 70, by a qualified testing agency, and marked for intended location and application.
5. General: Include hot- and cold-water indicators; coordinate faucet inlets with supplies and fixture hole punchings; coordinate outlet with spout and fixture receptor.

2.11 LAVATORY AND SINK SUPPLY FITTINGS

A. NSF Standard: Comply with NSF/ANSI 61, "Drinking Water System Components - Health Effects," for supply-fitting materials that will be in contact with potable water.

B. Standard: ASME A112.18.1/CSA B125.1.

C. Supply Piping: Chrome-plated-brass pipe or chrome-plated copper tube matching water-supply piping size. Include chrome-plated-brass or stainless steel wall flange.

D. Supply Stops: Chrome-plated-brass, one-quarter-turn, ball-type or compression valve with inlet connection matching supply piping.

PART 3 - EXECUTION

3.1 EXAMINATION

A. Examine roughing-in of water supply, sanitary drainage, and vent piping systems to verify actual locations of piping connections before fixture installation.

B. Examine counters, walls and floors for suitable conditions where fixtures will be installed.

C. Proceed with installation only after unsatisfactory conditions have been corrected.

3.2 INSTALLATION

A. Water-Closet Installation:
1. Install level and plumb according to roughing-in drawings.
2. Install floor-mounted water closets on bowl-to-drain connecting fitting attachments to piping or building substrate.
3. Install accessible, wall-mounted water closets at mounting height for handicapped/elderly, according to ICC/ANSI A117.1.

B. Urinal Installation:
1. Install urinals level and plumb according to roughing-in drawings.
2. Install wall-hung, back-outlet urinals onto waste fitting seals and attached to supports.
3. Install wall-hung, bottom-outlet urinals with tubular waste piping attached to supports.
4. Install accessible, wall-mounted urinals at mounting height for the handicapped/elderly, according to ICC/ANSI A117.1.

5. Install trap-seal liquid in waterless urinals.

C. Lavatory and Sink Installation:
1. Install lavatories level and plumb according to roughing-in drawings.
2. Install supports, affixed to building substrate, for wall-mounted lavatories.
3. Install accessible wall-mounted lavatories at handicapped/elderly mounting height for people with disabilities or the elderly, according to ICC/ANSI A117.1.
4. Install wall flanges or escutcheons at piping wall penetrations in exposed, finished locations. Use deep-pattern escutcheons if required to conceal protruding fittings. Comply with escutcheon requirements specified in Section 22 05 18.
5. Seal joints between lavatories, counters, and walls using sanitary-type, one-part, mildew-resistant silicone sealant. Match sealant color to fixture color. Comply with sealant requirements specified in Section 07 92 00.
6. Install protective shielding pipe covers and enclosures on exposed supplies and waste piping of accessible lavatories. Comply with requirements in Section 22 07 19.

D. Support Installation:
1. Install supports, affixed to building substrate, for plumbing fixtures.
2. Water Closets:
   a. Use carrier supports with waste-fitting assembly and seal.
   b. Install floor-mounted, back-outlet water closets attached to building floor substrate, onto waste-fitting seals; and attach to support.
   c. Install wall-mounted, back-outlet water-closet supports with waste-fitting assembly and waste-fitting seals; and affix to building substrate.
3. Urinals:
   a. Use off-floor carriers with waste fitting and seal for back-outlet urinals.
   b. Use carriers without waste fitting for urinals with tubular waste piping.
   c. Use chair-type carrier supports with rectangular steel uprights for accessible urinals.

E. Flushometer-Valve Installation:
1. Install flushometer-valve, water-supply fitting on each supply to each plumbing fixture.
2. Attach supply piping to supports or substrate within pipe spaces behind fixtures.
3. Install lever-handle flushometer valves for accessible plumbing fixtures with handle mounted on open side of fixture.
4. Install actuators in locations that are easy for people with disabilities to reach.
5. Install fresh batteries in battery-powered, electronic-sensor mechanisms.

F. Install toilet seats on water closets.

G. Wall Flange and Escutcheon Installation:
1. Install wall flanges or escutcheons at piping wall penetrations in exposed, finished locations and within cabinets and millwork.
2. Install deep-pattern escutcheons if required to conceal protruding fittings.
3. Comply with escutcheon requirements specified in Section 22 05 18.

H. Joint Sealing:
1. Seal joints between fixtures and walls and floors using sanitary-type, one-part, mildew-resistant silicone sealant.
2. Match sealant color to fixture color.
3. Comply with sealant requirements specified in Section 07 92 00.

3.3 CONNECTIONS

A. Connect fixtures with water supplies, stops, and risers, and with traps, soil, waste, and vent piping. Use size fittings required to match fixtures.

B. Comply with water piping requirements specified in Section 22 11 16.

C. Comply with traps and soil and waste piping requirements specified in Section 22 13 16.

D. Where installing piping adjacent to fixtures, allow space for service and maintenance.

E. Install protective-shielding pipe covers and enclosures on exposed supplies and waste piping of accessible fixtures. Comply with requirements in Section 22 07 19.

3.4 ADJUSTING

A. Operate and adjust fixtures and controls. Replace damaged and malfunctioning fixtures, fittings, and controls.

B. Adjust water pressure at flushometer valves and faucets to produce proper flow.

C. Install fresh batteries in battery-powered, electronic-sensor mechanisms.

3.5 CLEANING AND PROTECTION

A. After completing installation of fixtures, inspect and repair damaged finishes.

B. Clean fixtures, faucets, and other fittings with manufacturers' recommended cleaning methods and materials.

C. Provide protective covering for installed fixtures and fittings.

D. Do not allow use of fixtures for temporary facilities unless approved in writing by Owner.

END OF SECTION 22 42 00

SECTION 22 42 16 - COMMERCIAL LAVATORIES AND FAUCETS

PART 1 - GENERAL

1.1 RELATED DOCUMENTS

A. Drawings and general provisions of the Contract, including General and Supplementary Conditions and Division 01 Specification Sections, apply to this Section.

1.2 SECTION INCLUDES

A. Commercial lavatories.

B. Commercial faucets.

1.3 RELATED SECTIONS

A. Division 10 Section “Toilet, Bath and Laundry Accessories” for matching design soap dispensers.

B. Division 22 Section "Domestic Water Piping Specialties" for thermostatic mixing valves.

1.4 REFERENCES:

A. American National Standards Institute (ANSI):
1. ANSI Z 124.3 - Plastic Lavatories.
2. ANSI Z 124.6 - Plastic Sinks.

B. American Society of Mechanical Engineers (ASME):
1. ASME A112.18.1 Plumbing Supply Fittings.

C. ASTM International (ASTM):
1. ASTM C 531 - Standard Test Method for Linear Shrinkage and Coefficient of Thermal Expansion of Chemical-Resistant Mortars, Grouts, Monolithic Surfacings, and Polymer Concretes.
2. ASTM D 570 - Standard Test Method for Water Absorption of Plastics.
3. ASTM D 638 - Standard Test Method for Tensile Properties of Plastics.
4. ASTM D 785 - Standard Test Method for Rockwell Hardness of Plastics and Electrical Insulating Materials.
5. ASTM E 84 - Standard Test Method for Surface Burning Characteristics of Building Materials.

D. GREENGUARD Environmental Institute (GEI):
1. GREENGUARD listed and certified low emitting products.

E. International Association of Plumbing and Mechanical Officials (IAPMO):
1. Universal Plumbing Code (cUPC both U.S. and Canada).

F. Public Law 102-486, Energy Policy Act, requires that public lavatories manufactured after December 31, 1996, have flow rate or consumption not greater than 0.5 gpm (1.5 L/min.) or 0.25 gal. (0.95 L) per metering cycle.

G. State of Texas:
1. Texas Accessibility Standards (TAS).

H. US Federal Government:
1. Public Law 102-486 - Energy Policy Act. 1992.
2. U.S. Architectural & Transportation Barriers Compliance Board. Americans with Disabilities Act (ADA), Accessibility Guidelines for Buildings and Facilities (ADAAG).

1.5 ACTION SUBMITTALS

A. Product Data: For each product:
   1. Manufacturer's data sheets indicating operating characteristics, materials and finishes.
   2. Include details of electrical and mechanical operating parts.
   3. Provide mounting requirements and rough-in dimensions.
   4. Mark each sheet with product drawing designation.

1.6 INFORMATION SUBMITTALS

A. Sample warranty.

B. Operation, care and cleaning instructions.

1.7 MAINTENANCE SUBMITTALS

A. Furnish indicated spare parts that are packaged with identifying labels listing associated products.

B. Operation and Maintenance data.

1.8 QUALITY ASSURANCE

A. Laminar-Flow, Faucet-Spout Outlets:
   1. NSF Standard: Comply with NSF 372 for faucet-spout outlet materials that will be in contact with potable water.
   2. Description: Chrome-plated-brass, faucet-spout outlet that produces non-aerating, laminar stream. Include external or internal thread that mates with faucet outlet for attachment to faucets where indicated and flow-rate range that includes flow of faucet.

B. Electrical Components, Devices, and Accessories: Listed and labeled as defined in NFPA 70, by a qualified testing agency, and marked for intended location and application.

C. Comply with Public Law 102-486, Energy Policy Act.

D. Comply with NSF 372, Drinking Water System Components – Health Effects.
   1. Product shall meet a weighted average of not more than 0.25 percent lead as required by the U.S. Safe Drinking Water Act.

E. Solid surface material GREENGUARD certified as low-emitting material.

1.9 WARRANTY

A. Special Manufacturer’s Warranty: Provide manufacturer's standard form in which manufacturer agrees to repair or replace products that fail in materials or workmanship.
   1. Terreon lavatories: 10 years.
   2. Faucets: Three years.

PART 2 - PRODUCTS

2.1 MANUFACTURERS

A. Basis-of-Design Product: Subject to compliance with requirements, provide commercial lavatories manufactured by Bradley Corporation, Menomonee Falls, WI 53051, (800)272-3539, fax (262)251-5817; Email info@BradleyCorp.com; Website www.bradleycorp.com.
   1. Submit requests for substitution in accordance with Instructions to Bidders and Division 01 General Requirements.
   2. Provide specified designer matched faucet products; Owner will not consider substitution requests for designer matched soap dispenser and faucet products.

2.2 MATERIALS

A. Solid Surface Material: Where indicated as constructed of solid surface material, fabricate plumbing fixtures from thermoset bio-based resin certified by approved independent testing agency (IAMPO R&T) as complying with applicable national building codes, with the following minimum properties:
   1. Basis of Design Product: **Bradley, Terreon**, or a comparable product fabricated from one of the following materials:
      a. DuPont, Corian Products.
      b. Wilsonart International, Inc., Gibraltar Products.
   2. Thickness: 1/2 inch (13 mm), minimum.
   3. Liquid Absorption: 0.03 percent in 24 hours, per ASTM D 570.
   4. Tensile Strength: 5000 psi (34 MPa), minimum, per ASTM D 638.
   5. Thermal Expansion: 2.96, per ASTM C 531.
   6. Hardness: 3-4 Mohs Scale, per ASTM D785.
   7. Fire Resistance: Class 1, per ASTM E 84.

2.3 LAVATORIES, MULTIPLE USER SYSTEMS

A. Wall-mounted **[**3**]** Station Lavatory **L1**: Constructed of a seamless one piece rectilinear solid surface bowl with center contour and individual drains to create personal space, integral overflows. Unit includes supply kit – comprised of lead free supply hoses and stops. Unit includes individual or combined drain assembly – comprised of plungable 300 series stainless steel strainers, tail-piece connections and p-traps. Unit includes heavy-gage stainless steel mounting bracket, concealed by high impact polymer trap cover.
   1. Basis of Design Manufacturer/Model: **Bradley, Express Deck Lavatory System, ELX-Series Model No. ELX-3**.
   2. Product Compliance:
      a. ADA / ICC ANSI A117.1.
      b. IAPMO IGC 156and requirements of CSA B45.5/IAPMO Z124 and ASME A112.18.1/CSA B125.1.
      c. NSF/ANSI 372.
   3. Overall Unit Size: 85 by 21-5/8 inches (2286 by 549 mm) with 3 bowls.
   4. Basksplash: integral 2-1/2 inches (63.5 mm) coved backsplash.
   5. Bowl/Deck Color: Silver Mist.
   6. Water Supply: Thermostatic mixing valve assembly.
   7. Trap enclosure Color: Coal.

2.4 MATCHED FAUCETS

A. Deck Mounted Faucet – General:
   1. Basis of Design Manufacturer/Model: **Bradley Verge**
   2. Touch free dual sensor activation.
   3. Compliance and Certifications:
      a. ADA ANSI/ICC A117.1, Citation 609.3.
      b. ASME A112.18.1/CSA B125.1.
      c. NSF/ANSI 372 – Lead Free.
      d. NSF/ANSI 61.
      e. cUPC.
      f. CE electrical components.
   4. Vandal-resistant construction shall include concealed sensor package, durable finish, and rotation resistant gasket/washer.
   5. In-line filter supplied with either mixing assembly or tempered line assembly to trap debris.
   6. Operation: Dual sensors utilizing time of flight and diffuse reflective sensors.
      a. Operating Water Pressure Range: 20 to 125 psi.

b. Faucet activates water flow only when user's hands enter the infrared detection zone.
c. Faucet turns off after user's hands are removed from the lavatory bowl area.
d. Eleven (11) second run time (with or without hands under sensor). Manually set run time using control module (4s, 11s, 15s, 30s, 60s, 180s with or without auto system rinse).
e. Sixty (60) second auto system rinse every 24 hours. Option for sanitary manual flush.

7. Physical Vapor Deposition (PVD) Finish: "BS" Brushed Stainless.

B. Electronic Lavatory Faucets:

1. Sensor-Operated, High-Arc Profile Metering Faucet with Infrared Control: Vandal-resistant accessible faucet meeting ASME A112.18.1/CSA B125. ADA/ANSI A117.1 compliant.
   a. Basis of Design Manufacturer/Model: **Bradley Verge, Crestt Series, Model S53-3100**.
   b. Body: Commercial solid cast brass.
   c. Water Supply: Navigator Thermostatic Mixing Assembly (Supply Hose and Shut-Off Included).
   d. Flow Type: 0.35 gpm Silicone Tip, multiple individual laminar flow streams.
   e. Drain Strainer: Finish to match.
   f. Sensor Module: Water-conserving, vandal-resistant dual sensors utilizing time of flight and diffuse reflective sensors with timing turn-off delay and stationary object automatic timed cutoff.
   g. Power Supply: Battery (standard).
   h. Power Supply: 120VAC/6VDC, 50/60Hz plug-in transformer adapter with battery back-up. 4x AA batteries (included). Low battery indicator on spout.
   i. Power Supply: Provide power supply "splitter' for 2, 3 or 4 faucets as required. Provide 14 feet (4.3 m) extension power cable as required.

PART 3 - EXECUTION

3.1 INSTALLATION

A. Assemble fixtures and associated fittings and trim in accordance with manufacturer's instructions.

B. Install fixture supports attached to building structure for fixtures requiring supports.

C. Install fixtures onto waste-fitting seals or flanges and attach to supports or building structure.

D. Install accessible wall-mounted sinks at handicapped/elderly mounting height according to ICC/ANSI A117.1.

E. Install fixtures level, plumb, and firmly in place in accordance with manufacturer's rough-in requirements. Refer to Drawings for rim height requirements.

F. Install water supply piping to each fixture requiring water supply connection. Provide stop on each supply in readily-serviced location. Fasten supply piping to supports or substrate.

G. Install trap and waste piping to each fixture requiring sanitary system connection.

H. Install escutcheons at exposed piping penetrations in finished locations and within cabinets.

I. Seal joints between fixtures and walls, floors, and countertops with mildew-resistant silicone sealant.

3.2 CLEANING AND PROTECTION

A. Repair or replace defective work, including damaged fixtures and components.

B. Clean unit surfaces, test fixtures, and leave in ready-to-use condition.

C. Install new batteries in battery-operated devices at time of Substantial Completion.

D. Turn over keys, tools, maintenance instructions, and maintenance stock to Owner.

E. Protect units with water-resistant temporary covering. Do not allow temporary use of plumbing fixtures unless approved in writing by Architect. Remove protection at Substantial Completion and dispose.

3.3 TESTING AND ADJUSTING

A. Set field-adjustable temperature set points of temperature-actuated water mixing valves. Adjust set point within allowable temperature range.

B. Test and adjust installation.

C. Remove and replace malfunctioning thermostatic mixing valves and retest.

END OF SECTION

DIVISION 23

SECTION 23 05 13 - COMMON MOTOR REQUIREMENTS FOR HVAC EQUIPMENT

PART 1 - GENERAL

1.1 RELATED DOCUMENTS

A. Drawings and general provisions of the Contract, including General and Supplementary Conditions and Division 01 Specification Sections, apply to this Section.

1.2 SUMMARY

A. Section includes general requirements for single-phase and polyphase, general-purpose, horizontal, small and medium, squirrel-cage induction motors for use on ac power systems up to 600 V and installed at equipment manufacturer's factory or shipped separately by equipment manufacturer for field installation.

1.3 COORDINATION

A. Coordinate features of motors, installed units, and accessory devices to be compatible with the following:

1. Motor controllers.
2. Torque, speed, and horsepower requirements of the load.
3. Ratings and characteristics of supply circuit and required control sequence.
4. Ambient and environmental conditions of installation location.

PART 2 - PRODUCTS

2.1 GENERAL MOTOR REQUIREMENTS

A. Comply with NEMA MG 1 unless otherwise indicated.

B. Comply with IEEE 841 for severe-duty motors.

2.2 MOTOR CHARACTERISTICS

A. Duty: Continuous duty at ambient temperature of 40 deg C and at altitude of 3300 feet above sea level.

B. Capacity and Torque Characteristics: Sufficient to start, accelerate, and operate connected loads at designated speeds, at installed altitude and environment, with indicated operating sequence, and without exceeding nameplate ratings or considering service factor.

2.3 POLYPHASE MOTORS

A. Description: NEMA MG 1, Design B, medium induction motor.

B. Efficiency: Energy efficient, as defined in NEMA MG 1.

C. Service Factor: 1.15.

D. Multispeed Motors: Variable torque.

1. For motors with 2:1 speed ratio, consequent pole, single winding.
2. For motors with other than 2:1 speed ratio, separate winding for each speed.

E. Rotor: Random-wound, squirrel cage.

F. Bearings: Regreasable, shielded, antifriction ball bearings suitable for radial and thrust loading.

G. Temperature Rise: Match insulation rating.

H. Insulation: Class F.

I. Code Letter Designation:

1. Motors 15 HP and Larger: NEMA starting Code F or Code G.
2. Motors Smaller than 15 HP: Manufacturer's standard starting characteristic.

J. Enclosure Material: Cast iron for motor frame sizes 324T and larger; rolled steel for motor frame sizes smaller than 324T.

2.4 POLYPHASE MOTORS WITH ADDITIONAL REQUIREMENTS

A. Motors Used with Reduced-Voltage and Multispeed Controllers: Match wiring connection requirements for controller with required motor leads. Provide terminals in motor terminal box, suited to control method.

B. Motors Used with Variable Frequency Controllers: Ratings, characteristics, and features coordinated with and approved by controller manufacturer.

1. Windings: Copper magnet wire with moisture-resistant insulation varnish, designed and tested to resist transient spikes, high frequencies, and short time rise pulses produced by pulse-width modulated inverters.
2. Energy- and Premium-Efficient Motors: Class B temperature rise; Class F insulation.
3. Inverter-Duty Motors: Class F temperature rise; Class H insulation.
4. Thermal Protection: Comply with NEMA MG 1 requirements for thermally protected motors.

C. Severe-Duty Motors: Comply with IEEE 841, with 1.15 minimum service factor.

2.5 SINGLE-PHASE MOTORS

A. Motors larger than 1/20 hp shall be one of the following, to suit starting torque and requirements of specific motor application:

1. Permanent-split capacitor.
2. Split phase.
3. Capacitor start, inductor run.
4. Capacitor start, capacitor run.

B. Multispeed Motors: Variable-torque, permanent-split-capacitor type.

C. Bearings: Prelubricated, antifriction ball bearings or sleeve bearings suitable for radial and thrust loading.

D. Motors 1/20 HP and Smaller: Shaded-pole type.

E. Thermal Protection: Internal protection to automatically open power supply circuit to motor when winding temperature exceeds a safe value calibrated to temperature rating of motor insulation. Thermal-protection device shall automatically reset when motor temperature returns to normal range.

PART 3 - EXECUTION (Not Applicable)

END OF SECTION 23 05 13

SECTION 23 05 29 - HANGERS AND SUPPORTS FOR HVAC PIPING AND EQUIPMENT

PART 1 - GENERAL

1.1 RELATED DOCUMENTS

A. Drawings and general provisions of the Contract, including General and Supplementary Conditions and Division 01 Specification Sections, apply to this Section.

1.2 SUMMARY

A. Section Includes:

1. Metal pipe hangers and supports.
2. Trapeze pipe hangers.
3. Fiberglass pipe hangers.
4. Metal framing systems.
5. Fiberglass strut systems.
6. Thermal-hanger shield inserts.
7. Fastener systems.
8. Pipe stands.
9. Equipment stands.
10. Equipment supports.

B. Related Requirements:

1. Section 055000 "Metal Fabrications" for structural-steel shapes and plates for trapeze hangers for pipe and equipment supports.
2. Section 230516 "Expansion Fittings and Loops for HVAC Piping" for pipe guides and anchors.
3. Section 230548 "Vibration and Seismic Controls for HVAC" or Section 230548.13 "Vibration Controls for HVAC" for vibration isolation devices.
4. Section 233113 "Metal Ducts" and Section 233116 "Nonmetal Ducts" for duct hangers and supports.

1.3 ACTION SUBMITTALS

A. Product Data: For each type of product.

B. Shop Drawings: Signed and sealed by a qualified professional engineer. Show fabrication and installation details and include calculations for the following; include Product Data for components:

1. Trapeze pipe hangers.
2. Metal framing systems.
3. Fiberglass strut systems.
4. Pipe stands.
5. Equipment supports.

C. Delegated-Design Submittal: For trapeze hangers indicated to comply with performance requirements and design criteria, including analysis data signed and sealed by the qualified professional engineer responsible for their preparation.

1. Detail fabrication and assembly of trapeze hangers.
2. Include design calculations for designing trapeze hangers.

1.4 INFORMATIONAL SUBMITTALS

A. Welding certificates.

1.5 QUALITY ASSURANCE

A. Structural-Steel Welding Qualifications: Qualify procedures and personnel according to AWS D1.1/D1.1M, "Structural Welding Code - Steel."

B. Pipe Welding Qualifications: Qualify procedures and operators according to ASME Boiler and Pressure Vessel Code, Section IX.

PART 2 - PRODUCTS

2.1 PERFORMANCE REQUIREMENTS

A. Delegated Design: Engage a qualified professional engineer, as defined in Section 014000 "Quality Requirements," to design trapeze pipe hangers and equipment supports.

B. Structural Performance: Hangers and supports for HVAC piping and equipment shall withstand the effects of gravity loads and stresses within limits and under conditions indicated according to ASCE/SEI 7.

1. Design supports for multiple pipes, including pipe stands, capable of supporting combined weight of supported systems, system contents, and test water.
2. Design equipment supports capable of supporting combined operating weight of supported equipment and connected systems and components.
3. Design seismic-restraint hangers and supports for piping and equipment and obtain approval from authorities having jurisdiction.

2.2 METAL PIPE HANGERS AND SUPPORTS

A. Carbon-Steel Pipe Hangers and Supports:

1. Description: MSS SP-58, Types 1 through 58, factory-fabricated components.
2. Galvanized Metallic Coatings: Pregalvanized, hot-dip galvanized, or electro-galvanized.
3. Nonmetallic Coatings: Plastic coated, or epoxy powder-coated.
4. Padded Hangers: Hanger with fiberglass or other pipe insulation pad or cushion to support bearing surface of piping.
5. Hanger Rods: Continuous-thread rod, nuts, and washer made of carbon steel.

B. Stainless Steel Pipe Hangers and Supports:

1. Description: MSS SP-58, Types 1 through 58, factory-fabricated components.
2. Padded Hangers: Hanger with fiberglass or other pipe insulation pad or cushion to support bearing surface of piping.
3. Hanger Rods: Continuous-thread rod, nuts, and washer made of stainless steel.

C. Copper Pipe and Tube Hangers:

1. Description: MSS SP-58, Types 1 through 58, copper-plated steel, factory-fabricated components.
2. Hanger Rods: Continuous-thread rod, nuts, and washer made of copper-plated steel.

2.3 TRAPEZE PIPE HANGERS

A. Description: MSS SP-58, Type 59, shop- or field-fabricated pipe-support assembly made from structural carbon-steel shapes with MSS SP-58 carbon-steel hanger rods, nuts, saddles, and U-bolts.

2.4 FIBERGLASS PIPE HANGERS

A. Clevis-Type, Fiberglass Pipe Hangers:

1. Description: Similar to MSS SP-58, Type 1, factory-fabricated steel pipe hanger except hanger is made of fiberglass or fiberglass-reinforced resin.
2. Hanger Rods: Continuous-thread rod, washer, and nuts made of stainless steel.
3. Flammability: ASTM D635, ASTM E84, and UL 94.

B. Strap-Type, Fiberglass Pipe Hangers:

1. Description: Similar to MSS SP-58, Type 9 or Type 10, steel pipe hanger except hanger is made of fiberglass-reinforced resin.

   a. Flammability: ASTM D635, ASTM E84, and UL 94.

2. Hanger Rod and Fittings: Continuous-thread rod, washer, and nuts made of stainless steel.

2.5 PLASTIC PIPE HANGERS

A. Description: Similar to MSS SP-58, Types 1 through 58, factory-fabricated steel pipe hanger except hanger is made of plastic.

B. Hanger Rods: Continuous-thread rod, nuts, and washer made of stainless steel.

C. Flammability: ASTM D635, ASTM E84, and UL 94.

2.6 METAL FRAMING SYSTEMS

A. MFMA Manufacturer Metal Framing Systems:

1. Description: Shop- or field-fabricated, pipe-support assembly made of steel channels, accessories, fittings, and other components for supporting multiple parallel pipes.

2. Standard: Comply with MFMA-4 factory-fabricated components for field assembly.
3. Channels: Continuous slotted carbon-steel channel with inturned lips.
4. Channel Width: Selected for applicable load criteria.
5. Channel Nuts: Formed or stamped nuts or other devices designed to fit into channel slot and, when tightened, prevent slipping along channel.
6. Hanger Rods: Continuous-thread rod, nuts, and washer made of galvanized steel.
7. Metallic Coating: Pregalvanized G90 (Z275).
8. Paint Coating: Green epoxy, acrylic, or urethane.
9. Plastic Coating: PVC.

B. Non-MFMA Manufacturer Metal Framing Systems:

1. Description: Shop- or field-fabricated, pipe-support assembly made of steel channels, accessories, fittings, and other components for supporting multiple parallel pipes.
2. Standard: Comply with MFMA-4 factory-fabricated components for field assembly.
3. Channels: Continuous slotted carbon-steel channel with inturned lips.
4. Channel Width: Select for applicable load criteria.
5. Channel Nuts: Formed or stamped nuts or other devices designed to fit into channel slot and, when tightened, prevent slipping along channel.
6. Hanger Rods: Continuous-thread rod, nuts, and washer made of galvanized steel.
7. Metallic Coating: Pregalvanized G90 (Z275).
8. Paint Coating: Green epoxy, acrylic, or urethane.
9. Plastic Coating: PVC.

2.7 THERMAL-HANGER SHIELD INSERTS

A. Insulation-Insert Material for Cold Piping: ASTM C552, Type II cellular glass with 100-psi or ASTM C591, Type VI, Grade 1 polyisocyanurate with 125-psi minimum compressive strength and vapor barrier.

B. Insulation-Insert Material for Hot Piping: Water-repellent-treated, ASTM C533, Type I calcium silicate with 100-psi or ASTM C591, Type VI, Grade 1 polyisocyanurate with 125-psi minimum compressive strength.

C. For Trapeze or Clamped Systems: Insert and shield shall cover entire circumference of pipe.

D. For Clevis or Band Hangers: Insert and shield shall cover lower 180 degrees of pipe.

E. Insert Length: Extend 2 inches beyond sheet metal shield for piping operating below ambient air temperature.

2.8 FASTENER SYSTEMS

A. Powder-Actuated Fasteners: Not Allowed.

B. Mechanical-Expansion Anchors: Insert-wedge-type anchors for use in hardened portland cement concrete; with pull-out, tension, and shear capacities appropriate for supported loads and building materials where used.

1. Indoor Applications: Zinc-coated or stainless steel.
2. Outdoor Applications: Stainless steel.

2.9 PIPE STANDS

A. General Requirements for Pipe Stands: Shop- or field-fabricated assemblies made of manufactured corrosion-resistant components to support roof-mounted piping.

B. Compact Pipe Stand:

1. Description: Single base unit with integral-rod roller, pipe clamps, or V-shaped cradle to support pipe, for roof installation without membrane penetration.
2. Base: Single, vulcanized rubber, molded polypropylene, or polycarbonate.
3. Hardware: Galvanized steel or polycarbonate.
4. Accessories: Protection pads.

C. Low-Profile, Single Base, Single-Pipe Stand:

1. Description: Single base with vertical and horizontal members, and pipe support, for roof installation without membrane protection.
2. Base: Single, vulcanized rubber, molded polypropylene, or polycarbonate.
3. Vertical Members: Two, galvanized- or stainless-steel, continuous-thread 1/2-inch rods.
4. Horizontal Member: Adjustable horizontal, galvanized- or stainless-steel pipe support channels.
5. Pipe Supports: Roller, Strut clamps, Clevis hanger or Swivel hanger.
6. Hardware: Galvanized or Stainless steel.
7. Accessories: Protection pads.
8. Height: 12 inches above roof.

D. High-Profile, Single Base, Single-Pipe Stand:

1. Description: Single base, vertical and horizontal members, and pipe support, for roof installation without membrane penetration.
2. Base: Single vulcanized rubber or molded polypropylene.
3. Vertical Members: Two, galvanized or stainless-steel, continuous-thread 1/2-inch rods.
4. Horizontal Member: One, adjustable height, galvanized- or stainless]-steel pipe support slotted channel or plate.
5. Pipe Supports: Roller, Clevis hanger or Swivel hanger.
6. Hardware: Galvanized or Stainless steel.
7. Accessories: Protection pads, 1/2-inch continuous-thread galvanized-steel rod, 1/2-inch continuous-thread stainless steel rod.
8. Height: 36 inches above roof.

E. High-Profile, Multiple-Pipe Stand:

1. Description: Assembly of bases, vertical and horizontal members, and pipe supports, for roof installation without membrane penetration.
2. Bases: Two or more; molded polypropylene.
3. Vertical Members: Two or more, galvanized- or stainless-steel channels.
4. Horizontal Members: One or more, adjustable height, galvanized- or stainless-steel pipe support.
5. Pipe Supports: Roller, Strut clamps, Clevis hanger or Swivel hanger.
6. Hardware: Galvanized or Stainless steel.
7. Accessories: Protection pads, 1/2-inch continuous-thread rod.
8. Height: 36 inches above roof.

F. Curb-Mounted-Type Pipe Stands: Shop- or field-fabricated pipe supports made from structural-steel shapes, continuous-thread rods, and rollers, for mounting on permanent stationary roof curb.

2.10 EQUIPMENT SUPPORTS

A. Description: Welded, shop- or field-fabricated equipment support made from structural carbon-steel shapes.

2.11 OUTDOOR EQUIPMENT STANDS

A. Description: Individual foot supports with elevated adjustable channel cross bars and clamps/fasteners/bolts for ground or roof supported outdoor equipment components, without roof membrane penetration, in a pre-fabricated system that can be modularly-assembled on site.

B. Foot Material: Rubber or polypropylene.

C. Rails Material: Hot dip galvanized carbon steel.

D. Wind/Sliding Load Resistance: Up to 100 mph minimum.

2.12 MATERIALS

A. Aluminum: ASTM B221 (ASTM B221M).

B. Carbon Steel: ASTM A1011/A1011M.

C. Structural Steel: ASTM A36/A36M, carbon-steel plates, shapes, and bars; galvanized.

D. Stainless Steel: ASTM A240/A240M.

E. Threaded Rods: Continuously threaded. Zinc-plated or galvanized steel for indoor applications and stainless steel for outdoor applications. Mating nuts and washers of similar materials as rods.

F. Grout: ASTM C1107/C1107M, factory-mixed and -packaged, dry, hydraulic-cement, nonshrink and nonmetallic grout; suitable for interior and exterior applications.

1. Properties: Nonstaining, noncorrosive, and nongaseous.
2. Design Mix: 5000-psi, 28-day compressive strength.

PART 3 - EXECUTION

3.1 APPLICATION

A. Comply with requirements in Section 078413 "Penetration Firestopping" for firestopping materials and installation for penetrations through fire-rated walls, ceilings, and assemblies.

B. Strength of Support Assemblies: Where not indicated, select sizes of components so strength will be adequate to carry present and future static loads within specified loading limits. Minimum static design load used for strength determination shall be weight of supported components plus 200 lb.

3.2 HANGER AND SUPPORT INSTALLATION

A. Metal Pipe-Hanger Installation: Comply with MSS SP-58. Install hangers, supports, clamps, and attachments as required to properly support piping from the building structure.

B. Metal Trapeze Pipe-Hanger Installation: Comply with MSS SP-58. Arrange for grouping of parallel runs of horizontal piping, and support together on field-fabricated trapeze pipe hangers.

1. Pipes of Various Sizes: Support together and space trapezes for smallest pipe size or install intermediate supports for smaller diameter pipes as specified for individual pipe hangers.
2. Field fabricate from ASTM A36/A36M, carbon-steel shapes selected for loads being supported. Weld steel according to AWS D1.1/D1.1M.

C. Fiberglass Pipe-Hanger Installation: Comply with applicable portions of MSS SP-58. Install hangers and attachments as required to properly support piping from building structure.

D. Metal Framing System Installation: Arrange for grouping of parallel runs of piping, and support together on field-assembled strut systems.

E. Thermal-Hanger Shield Installation: Install in pipe hanger or shield for insulated piping.

F. Fastener System Installation:

1. Install mechanical-expansion anchors in concrete after concrete is placed and completely cured. Install fasteners according to manufacturer's written instructions.

G. Pipe Stand Installation:

1. Pipe Stand Types except Curb-Mounted Type: Assemble components and mount on smooth roof surface. Do not penetrate roof membrane.
2. Curb-Mounted-Type Pipe Stands: Assemble components or fabricate pipe stand and mount on permanent, stationary roof curb. See Section 077200 "Roof Accessories" for curbs.

H. Install hangers and supports complete with necessary attachments, inserts, bolts, rods, nuts, washers, and other accessories.

I. Equipment Support Installation: Fabricate from welded-structural-steel shapes.

J. Install hangers and supports to allow controlled thermal and seismic movement of piping systems, to permit freedom of movement between pipe anchors, and to facilitate action of expansion joints, expansion loops, expansion bends, and similar units.

K. Install lateral bracing with pipe hangers and supports to prevent swaying.

L. Install building attachments within concrete slabs or attach to structural steel. Install additional attachments at concentrated loads, including valves, flanges, and strainers, NPS 2-1/2 and

larger and at changes in direction of piping. Install concrete inserts before concrete is placed; fasten inserts to forms and install reinforcing bars through openings at top of inserts.

M. Load Distribution: Install hangers and supports so that piping live and dead loads and stresses from movement will not be transmitted to connected equipment.

N. Pipe Slopes: Install hangers and supports to provide indicated pipe slopes and to not exceed maximum pipe deflections allowed by ASME B31.9 for building services piping.

O. Insulated Piping:

1. Attach clamps and spacers to piping.

   a. Piping Operating above Ambient Air Temperature: Clamp may project through insulation.
   b. Piping Operating below Ambient Air Temperature: Use thermal-hanger shield insert with clamp sized to match OD of insert.
   c. Do not exceed pipe stress limits allowed by ASME B31.9 for building services piping.

2. Install MSS SP-58, Type 39, protection saddles if insulation without vapor barrier is indicated. Fill interior voids with insulation that matches adjoining insulation.

   a. Option: Thermal-hanger shield inserts may be used. Include steel weight-distribution plate for pipe NPS 4 and larger if pipe is installed on rollers.

3. Install MSS SP-58, Type 40, protective shields on cold piping with vapor barrier. Shields shall span an arc of 180 degrees.

   a. Option: Thermal-hanger shield inserts may be used. Include steel weight-distribution plate for pipe NPS 4 and larger if pipe is installed on rollers.

4. Shield Dimensions for Pipe: Not less than the following:

   a. NPS 1/4 to NPS 3-1/2: 12 inches long and 0.048 inch thick.
   b. NPS 4: 12 inches long and 0.06 inch thick.
   c. NPS 5 and NPS 6: 18 inches long and 0.06 inch thick.
   d. NPS 8 to NPS 14: 24 inches long and 0.075 inch thick.
   e. NPS 16 to NPS 24: 24 inches long and 0.105 inch thick.

5. Pipes NPS 8 and Larger: Include reinforced calcium-silicate-insulation inserts of length at least as long as protective shield.
6. Thermal-Hanger Shields: Install with insulation same thickness as piping insulation.

3.3 EQUIPMENT SUPPORTS

A. Fabricate structural-steel stands to suspend equipment from structure overhead or to support equipment above floor.

B. Grouting: Place grout under supports for equipment and make bearing surface smooth.

C. Provide lateral bracing, to prevent swaying, for equipment supports.

3.4 METAL FABRICATIONS

A. Cut, drill, and fit miscellaneous metal fabrications for trapeze pipe hangers and equipment supports.

B. Fit exposed connections together to form hairline joints. Field weld connections that cannot be shop welded because of shipping size limitations.

C. Field Welding: Comply with AWS D1.1/D1.1M procedures for shielded, metal arc welding; appearance and quality of welds; and methods used in correcting welding work; and with the following:

1. Use materials and methods that minimize distortion and develop strength and corrosion resistance of base metals.
2. Obtain fusion without undercut or overlap.
3. Remove welding flux immediately.
4. Finish welds at exposed connections so no roughness shows after finishing and so contours of welded surfaces match adjacent contours.

3.5 ADJUSTING

A. Hanger Adjustments: Adjust hangers to distribute loads equally on attachments and to achieve indicated slope of pipe.

B. Trim excess length of continuous-thread hanger and support rods to 1-1/2 inches.

3.6 PAINTING

A. Touchup: Clean field welds and abraded areas of shop paint. Paint exposed areas immediately after erecting hangers and supports. Use same materials as used for shop painting. Comply with SSPC-PA 1 requirements for touching up field-painted surfaces.

1. Apply paint by brush or spray to provide a minimum dry film thickness of 2.0 mils.

B. Galvanized Surfaces: Clean welds, bolted connections, and abraded areas and apply galvanizing-repair paint to comply with ASTM A780/A780M.

3.7 HANGER AND SUPPORT SCHEDULE

A. Specific hanger and support requirements are in Sections specifying piping systems and equipment.

B. Comply with MSS SP-58 for pipe-hanger selections and applications that are not specified in piping system Sections.

C. Use hangers and supports with galvanized metallic coatings for piping and equipment that will not have field-applied finish.

D. Use nonmetallic coatings on attachments for electrolytic protection where attachments are in direct contact with copper tubing.

E. Use carbon-steel pipe hangers and supports, metal trapeze pipe hangers and metal framing systems and attachments for general service applications.

F. Use stainless steel pipe hangers and fiberglass pipe hangers and fiberglass strut systems and stainless steel or corrosion-resistant attachments for hostile environment applications.

G. Use copper-plated pipe hangers and copper or stainless steel attachments for copper piping and tubing.

H. Use padded hangers for piping that is subject to scratching.

I. Use thermal-hanger shield inserts for insulated piping and tubing.

J. Horizontal-Piping Hangers and Supports: Unless otherwise indicated and except as specified in piping system Sections, install the following types:

1. Adjustable, Steel Clevis Hangers (MSS Type 1): For suspension of noninsulated or insulated, stationary pipes NPS 1/2 to NPS 30 (DN 15 to DN 750).
2. Yoke-Type Pipe Clamps (MSS Type 2): For suspension of up to 1050 deg F (566 deg C), pipes NPS 4 to NPS 24 (DN 100 to DN 600), requiring up to 4 inches (100 mm) of insulation.
3. Carbon- or Alloy-Steel, Double-Bolt Pipe Clamps (MSS Type 3): For suspension of pipes NPS 3/4 to NPS 36 (DN 20 to DN 900), requiring clamp flexibility and up to 4 inches (100 mm) of insulation.
4. Steel Pipe Clamps (MSS Type 4): For suspension of cold and hot pipes NPS 1/2 to NPS 24 (DN 15 to DN 600) if little or no insulation is required.
5. Pipe Hangers (MSS Type 5): For suspension of pipes NPS 1/2 to NPS 4 (DN 15 to DN 100), to allow off-center closure for hanger installation before pipe erection.
6. Adjustable, Swivel Split- or Solid-Ring Hangers (MSS Type 6): For suspension of noninsulated, stationary pipes NPS 3/4 to NPS 8 (DN 20 to DN 200).
7. Adjustable, Steel Band Hangers (MSS Type 7): For suspension of noninsulated, stationary pipes NPS 1/2 to NPS 8 (DN 15 to DN 200).
8. Adjustable Band Hangers (MSS Type 9): For suspension of noninsulated, stationary pipes NPS 1/2 to NPS 8 (DN 15 to DN 200).
9. Adjustable, Swivel-Ring Band Hangers (MSS Type 10): For suspension of noninsulated, stationary pipes NPS 1/2 to NPS 8 (DN 15 to DN 200).
10. Split Pipe Ring with or without Turnbuckle Hangers (MSS Type 11): For suspension of noninsulated, stationary pipes NPS 3/8 to NPS 8 (DN 10 to DN 200).
11. Extension Hinged or Two-Bolt Split Pipe Clamps (MSS Type 12): For suspension of noninsulated, stationary pipes NPS 3/8 to NPS 3 (DN 10 to DN 80).
12. U-Bolts (MSS Type 24): For support of heavy pipes NPS 1/2 to NPS 30 (DN 15 to DN 750).
13. Clips (MSS Type 26): For support of insulated pipes not subject to expansion or contraction.
14. Pipe Saddle Supports (MSS Type 36): For support of pipes NPS 4 to NPS 36 (DN 100 to DN 900), with steel-pipe base stanchion support and cast-iron floor flange or carbon-steel plate.
15. Pipe Stanchion Saddles (MSS Type 37): For support of pipes NPS 4 to NPS 36 (DN 100 to DN 900), with steel-pipe base stanchion support and cast-iron floor flange or carbon-steel plate, and with U-bolt to retain pipe.
16. Adjustable Pipe Saddle Supports (MSS Type 38): For stanchion-type support for pipes NPS 2-1/2 to NPS 36 (DN 65 to DN 900) if vertical adjustment is required, with steel-pipe base stanchion support and cast-iron floor flange.
17. Single-Pipe Rolls (MSS Type 41): For suspension of pipes NPS 1 to NPS 30 (DN 25 to DN 750), from two rods if longitudinal movement caused by expansion and contraction might occur.

18. Adjustable Roller Hangers (MSS Type 43): For suspension of pipes NPS 2-1/2 to NPS 24 (DN 65 to DN 600), from single rod if horizontal movement caused by expansion and contraction might occur.
19. Complete Pipe Rolls (MSS Type 44): For support of pipes NPS 2 to NPS 42 (DN 50 to DN 1050) if longitudinal movement caused by expansion and contraction might occur but vertical adjustment is unnecessary.
20. Pipe Roll and Plate Units (MSS Type 45): For support of pipes NPS 2 to NPS 24 (DN 50 to DN 600) if small horizontal movement caused by expansion and contraction might occur and vertical adjustment is unnecessary.
21. Adjustable Pipe Roll and Base Units (MSS Type 46): For support of pipes NPS 2 to NPS 30 (DN 50 to DN 750) if vertical and lateral adjustment during installation might be required in addition to expansion and contraction.

K. Vertical-Piping Clamps: Unless otherwise indicated and except as specified in piping system Sections, install the following types:

1. Extension Pipe or Riser Clamps (MSS Type 8): For support of pipe risers NPS 3/4 to NPS 24 (DN 24 to DN 600).
2. Carbon- or Alloy-Steel Riser Clamps (MSS Type 42): For support of pipe risers NPS 3/4 to NPS 24 (DN 20 to DN 600) if longer ends are required for riser clamps.

L. Hanger-Rod Attachments: Unless otherwise indicated and except as specified in piping system Sections, install the following types:

1. Steel Turnbuckles (MSS Type 13): For adjustment up to 6 inches (150 mm) for heavy loads.
2. Steel Clevises (MSS Type 14): For 120 to 450 deg F (49 to 232 deg C) piping installations.
3. Swivel Turnbuckles (MSS Type 15): For use with MSS Type 11, split pipe rings.
4. Malleable-Iron Sockets (MSS Type 16): For attaching hanger rods to various types of building attachments.
5. Steel Weldless Eye Nuts (MSS Type 17): For 120 to 450 deg F (49 to 232 deg C) piping installations.

M. Building Attachments: Unless otherwise indicated and except as specified in piping system Sections, install the following types:

1. Steel or Malleable Concrete Inserts (MSS Type 18): For upper attachment to suspend pipe hangers from concrete ceiling.
2. Top-Beam C-Clamps (MSS Type 19): For use under roof installations with bar-joist construction, to attach to top flange of structural shape.
3. Side-Beam or Channel Clamps (MSS Type 20): For attaching to bottom flange of beams, channels, or angles.
4. Center-Beam Clamps (MSS Type 21): For attaching to center of bottom flange of beams.
5. Welded Beam Attachments (MSS Type 22): For attaching to bottom of beams if loads are considerable and rod sizes are large.
6. C-Clamps (MSS Type 23): For structural shapes.
7. Top-Beam Clamps (MSS Type 25): For top of beams if hanger rod is required tangent to flange edge.
8. Side-Beam Clamps (MSS Type 27): For bottom of steel I-beams.
9. Steel-Beam Clamps with Eye Nuts (MSS Type 28): For attaching to bottom of steel I-beams for heavy loads.
10. Linked-Steel Clamps with Eye Nuts (MSS Type 29): For attaching to bottom of steel I-beams for heavy loads, with link extensions.
11. Malleable-Beam Clamps with Extension Pieces (MSS Type 30): For attaching to structural steel.

12. Welded-Steel Brackets: For support of pipes from below or for suspending from above by using clip and rod. Use one of the following for indicated loads:

    a. Light (MSS Type 31): 750 lb (340 kg).
    b. Medium (MSS Type 32): 1500 lb (680 kg).
    c. Heavy (MSS Type 33): 3000 lb (1360 kg).

13. Side-Beam Brackets (MSS Type 34): For sides of steel or wooden beams.
14. Plate Lugs (MSS Type 57): For attaching to steel beams if flexibility at beam is required.
15. Horizontal Travelers (MSS Type 58): For supporting piping systems subject to linear horizontal movement where headroom is limited.

N. Saddles and Shields: Unless otherwise indicated and except as specified in piping system Sections, install the following types:

1. Steel-Pipe-Covering Protection Saddles (MSS Type 39): To fill interior voids with insulation that matches adjoining insulation.
2. Protection Shields (MSS Type 40): Of length recommended in writing by manufacturer to prevent crushing insulation.
3. Thermal-Hanger Shield Inserts: For supporting insulated pipe.

O. Spring Hangers and Supports: Unless otherwise indicated and except as specified in piping system Sections, install the following types:

1. Restraint-Control Devices (MSS Type 47): Where indicated to control piping movement.
2. Spring Cushions (MSS Type 48): For light loads if vertical movement does not exceed 1-1/4 inches (32 mm).
3. Spring-Cushion Roll Hangers (MSS Type 49): For equipping Type 41, roll hanger with springs.
4. Spring Sway Braces (MSS Type 50): To retard sway, shock, vibration, or thermal expansion in piping systems.
5. Variable-Spring Hangers (MSS Type 51): Preset to indicated load and limit variability factor to 25 percent to allow expansion and contraction of piping system from hanger.
6. Variable-Spring Base Supports (MSS Type 52): Preset to indicated load and limit variability factor to 25 percent to allow expansion and contraction of piping system from base support.
7. Variable-Spring Trapeze Hangers (MSS Type 53): Preset to indicated load and limit variability factor to 25 percent to allow expansion and contraction of piping system from trapeze support.
8. Constant Supports: For critical piping stress and if necessary to avoid transfer of stress from one support to another support, critical terminal, or connected equipment. Include auxiliary stops for erection, hydrostatic test, and load-adjustment capability. These supports include the following types:

    a. Horizontal (MSS Type 54): Mounted horizontally.
    b. Vertical (MSS Type 55): Mounted vertically.
    c. Trapeze (MSS Type 56): Two vertical-type supports and one trapeze member.

P. Comply with MSS SP-58 for trapeze pipe-hanger selections and applications that are not specified in piping system Sections.

Q. Comply with MFMA-103 for metal framing system selections and applications that are not specified in piping system Sections.

R. Use mechanical-expansion anchors instead of building attachments where required in concrete construction.

END OF SECTION 23 05 29

SECTION 23 05 48 - VIBRATION AND SEISMIC CONTROLS FOR HVAC

PART 1 - GENERAL

1.1 SUMMARY

A. Section Includes:

1. Elastomeric isolation pads.
2. Elastomeric isolation mounts.
3. Restrained elastomeric isolation mounts.
4. Open-spring isolators.
5. Housed-spring isolators.
6. Restrained-spring isolators.
7. Housed-restrained-spring isolators.
8. Pipe-riser resilient support.
9. Resilient pipe guides.
10. Air-spring isolators.
11. Restrained-air-spring isolators.
12. Elastomeric hangers.
13. Spring hangers.
14. Snubbers.
15. Restraints - rigid type.
16. Restraints - cable type.
17. Restraint accessories.
18. Post-installed concrete anchors.
19. Concrete inserts.
20. Vibration isolation equipment bases.
21. Restrained isolation roof-curb rails.

B. Related Requirements:

1. Section 210548 "Vibration and Seismic Controls for Fire-Suppression Piping and Equipment" for devices for fire-suppression equipment and systems.
2. Section 220548 "Vibration and Seismic Controls for Plumbing Piping and Equipment" for devices for plumbing equipment and systems.

1.2 DEFINITIONS

A. Designated Seismic System: An HVAC component that requires design in accordance with ASCE/SEI 7, Ch. 13, and for which the Component Importance Factor is greater than 1.0.

B. IBC: International Building Code.

C. OSHPD: Office of Statewide Health Planning and Development (State of California).

1.3 ACTION SUBMITTALS

A. Product Data: For each type of product.

1. Include rated load, rated deflection, and overload capacity for each vibration isolation device.
2. Include load rating for each wind-force-restraint fitting and assembly.
3. Illustrate and indicate style, material, strength, fastening provision, and finish for each type and size of vibration isolation device and seismic- and wind-force-restraint component.
4. Annotate types and sizes of seismic restraints and accessories, complete with listing markings or report numbers and load rating in tension and compression as evaluated by an agency acceptable to authorities having jurisdiction.
5. Annotate to indicate application of each product submitted and compliance with requirements.
6. Interlocking Snubbers: Include ratings for horizontal, vertical, and combined loads.

B. Shop Drawings:

1. Detail fabrication and assembly of equipment bases.
2. Vibration Isolation Base Details: Detail fabrication including anchorages and attachments to structure and to supported equipment. Include adjustable motor bases, rails, and frames for equipment mounting.

C. Delegated Design Submittals:

1. For each seismic-restraint and wind-load protection device, including seismic-restrained mounting, pipe-riser resilient support, snubber, seismic restraint, seismic-restraint accessory, concrete anchor and insert, and restrained isolation roof-curb rail that is required by this Section or is indicated on Drawings, submit the following:

    a. Seismic and Wind-Load Restraint, and Vibration Isolation Base Selection: Select vibration isolators, seismic and wind-load restraints, and vibration isolation bases complying with performance requirements, design criteria, and analysis data.
    b. Riser Supports: Include riser diagrams and calculations showing anticipated expansion and contraction at each support point, initial and final loads on building structure, spring deflection changes, and seismic loads. Include certification by professional engineer that riser system was examined for excessive stress and that none exists.
    c. Concrete Anchors and Inserts: Include calculations showing anticipated seismic and wind loads. Include certification that device is approved by an NRTL for seismic reinforcement use.
    d. Seismic Design Calculations: Submit all input data and loading calculations prepared under "Seismic Design Calculations" Paragraph in "Performance Requirements" Article.
    e. Wind-Load Design Calculations: Submit all static and dynamic loading calculations prepared under "Wind-Load Design Calculations" Paragraph in "Performance Requirements" Article.
    f. Qualified Professional Engineer: All designated-design submittals for seismic- and wind-restraint calculations are to be signed and sealed by qualified professional engineer responsible for their preparation.

2. Seismic- and Wind-Restraint Detail Drawing:

    a. Design Analysis: To support selection and arrangement of seismic and wind restraints. Include calculations of combined tensile and shear loads.
    b. Details: Indicate fabrication and arrangement. Detail attachments of restraints to restrained items and to the structure. Show attachment locations, methods, and spacings. Identify components, list their strengths, and indicate directions and values of forces transmitted to the structure during seismic events. Indicate association with vibration isolation devices.

c. Coordinate seismic-restraint and vibration isolation details with wind-restraint details required for equipment mounted outdoors. Comply also with requirements in other Sections for equipment mounted outdoors.

3. All delegated design submittals for seismic- and wind-restraint detail Drawings are to be signed and sealed by qualified professional engineer responsible for their preparation.
4. Product Listing, Preapproval, and Evaluation Documentation: By an agency acceptable to authorities having jurisdiction, showing maximum ratings of restraint items and basis for approval (tests or calculations).
5. Design Calculations for Vibration Isolation Devices: Calculate static and dynamic loading due to equipment weight and operating forces required to select proper vibration isolators, and to design vibration isolation bases.
6. Riser Supports: Include riser diagrams and calculations showing anticipated expansion and contraction at each support point, initial and final loads on building structure, and spring deflection changes. Include certification that riser system was examined for excessive stress and that none exists.

1.4 INFORMATIONAL SUBMITTALS

A. Coordination Drawings: Show coordination of vibration isolation device installation and seismic bracing for HVAC piping and equipment with other systems and equipment in the vicinity, including other supports and restraints, if any.

B. Qualification Data: For professional engineer and testing agency.

C. Welding certificates.

D. Air-Spring Isolator Performance Certification: Include natural frequency, load, and damping test data performed by an independent agency.

E. Field quality-control reports.

F. Seismic Qualification Data: Provide special certification for designated seismic systems as indicated in ASCE/SEI 7-16, Paragraph 13.2.2, "Special Certification Requirements for Designated Seismic Systems" for all Designated Seismic Systems identified as such on Drawings or in the Specifications.

1. Provide equipment manufacturer's written certification for each designated active mechanical seismic device and system, stating that it will remain operable following the design earthquake. Certification must be based on requirements of ASCE/SEI 7 and AHRI 1270, including shake table testing per ICC-ES AC156 or a similar nationally recognized testing standard procedure acceptable to authorities having jurisdiction or experience data as permitted by ASCE/SEI 7-16.
2. Provide equipment manufacturer's written certification that components with hazardous contents maintain containment following the design earthquake by methods required in ASCE/SEI 7-16.
3. Submit evidence demonstrating compliance with these requirements for approval to authorities having jurisdiction after review and acceptance by a licensed professional engineer.
4. The following HVAC systems and components are Designated Seismic Systems and require written special certification of seismic qualification by manufacturer:

a. Air-side HVAC
1) Fans.

2) Air Handlers, Indoor & Roof top.
3) Air-conditioning units.
4) Compressors.
5) Cabinet Heaters.
6) Air distribution boxes, and
7) Other mechanical components constructed of sheet metal framing.

b. Wet-side HVAC.
1) Boilers.
2) Furnaces.
3) Atmospheric Tanks and bins.
4) Chillers.
5) Cooling Towers.
6) Pumps.
7) Water Heaters.
8) Heat Exchangers.
9) Evaporators.
10) Air Separators.
11) Manufacturing or Process Equipment, and
12) Other mechanical components constructed of high-deformability materials.

G. Wind-Force Performance Certification: Provide special certification for HVAC components subject to high wind exposure and impact damage and designated on Drawings or in the Specifications to require wind-force performance certification.

1. Provide equipment manufacturer's written certification for each designated HVAC device, stating that it will remain in place and operable following the design wind event and comply with all requirements of authorities having jurisdiction.
2. Provide manufacturer's written certification for each designated louver, damper, or similar device, stating that it will remain in place and protect opening from penetration of windborne debris and comply with all requirements of authorities having jurisdiction.
3. Certification must be based on ICC-ES or similar nationally recognized testing standard procedures acceptable to authorities having jurisdiction.
4. The following HVAC systems and components require special certification for high wind performance. Written special certification of resistance to the effects of high wind force and impact damage must be provided by manufacturer:

a. Air-side HVAC - On-grade & Roof top.
1) Fans.
2) Air Handlers.
3) Air-conditioning units.
4) Air-cooled Condensing Units.

1.5 CLOSEOUT SUBMITTALS

A. Operation and Maintenance Data: For air-spring isolators and restrained-air-spring isolators to include in operation and maintenance manuals.

1.6 QUALITY ASSURANCE

A. Testing Agency Qualifications: An independent agency, with the experience and capability to conduct testing indicated, be an NRTL as defined by OSHA in 29 CFR 1910.7, and be acceptable to authorities having jurisdiction.

B. Welding Qualifications: Qualify procedures and personnel in accordance with AWS D1.1/D1.1M, "Structural Welding Code - Steel."

C. Seismic- and Wind-Load-Restraint Device Load Ratings: Devices to be tested and rated in accordance with applicable code requirements and authorities having jurisdiction. Devices to be listed by a nationally recognized third party that requires periodic follow-up inspections and has a listing directory available to the public. Provide third-party listing by one or more of the following: an agency acceptable to authorities having jurisdiction.

PART 2 - PRODUCTS

2.1 PERFORMANCE REQUIREMENTS

A. Delegated Design: Engage a qualified professional engineer, as defined in Section 014000 "Quality Requirements," to design seismic and wind- load control system.

1. Seismic and Wind-Load Performance: Equipment to withstand the effects of earthquake motions and high wind events determined in accordance with ASCE/SEI 7-16.

B. Seismic Design Calculations:

1. Perform calculations to obtain force information necessary to properly select seismic-restraint devices, fasteners, and anchorage. Perform calculations using methods acceptable to applicable code authorities and as presented in ASCE/SEI 7 edition or other seismic calculation method required by authorities having jurisdiction. Where "ASCE/SEI 7" is used throughout this Section, it is to be understood that the edition referred to in this subparagraph is the edition intended as reference throughout the Section Text.

a. Data indicated below to be determined by Delegated Design Contractor must be obtained by Contractor and must be included in individual component submittal packages.
b. Coordinate seismic design calculations with wind-load calculations for equipment mounted outdoors. Comply with requirements in other Sections in addition to those in this Section for equipment mounted outdoors.
c. Building Occupancy Category: Refer to Structural Contract Documents for information.
d. Building Risk Category: Refer to Structural Contract Documents for information..
e. Building Site Classification: Refer to Structural Contract Documents for information..

2. Calculation Factors, ASCE/SEI 7-16, Ch. 13 - Seismic Design Requirements for Nonstructural Components: All section, paragraph, equation, and table numbers refer to ASCE/SEI 7-16 unless otherwise noted.

a. Horizontal Seismic Design Force F_p: Value is to be calculated by Delegated Design Contractor using Equation 13.3-1. Factors below must be obtained for this calculation:

1) S_{DS} = Spectral Acceleration: Refer to structural documents based on ASCE/SEI 7-16 Section 11.4.5. Value applies to all components on Project.
2) a_p = Component Amplification Factor: In accordance with ASCE/SEI 7-16 Section 13.6.1.
3) I_p = Component Importance Factor: In accordance with ASCE/SEI 7-16 Section 13.1.3.

4) W_p = Component Operating Weight: For each component. Obtain by Delegated Design Contractor from each component submittal.
5) R_p = Component Response Modification Factor: In accordance with ASCE/SEI 7-16, Table 13.6-1. Value applies to all components on Project.
6) z = Height in Structure of Point of Attachment of Component for Base: Determine from Project Drawings for each component by Delegated Design Contractor. For items at or below the base, "z" to be taken as zero.
7) h = Average Roof Height of Structure for Base: Determine from Project Drawings by Delegated Design Contractor.

b. Vertical Seismic Design Force: Calculated by Delegated Design Contractor using method explained in ASCE/SEI 7-16, Paragraph 13.3.1.2.
c. Seismic Relative Displacement D_{pl}: Calculate by Delegated Design Contractor using methods explained in ASCE/SEI 7-10, Paragraph 13.3.2. Factors below must be obtained for this calculation:

1) D_p = Relative Seismic Displacement that Each Component Must Be Designed to Accommodate: Calculate by Delegated Design Contractor in accordance with ASCE/SEI 7-10, Paragraph 13.3.2.
2) I_e = Structure Importance Factor: Refer to structural documents based on ASCE/SEI 7-10 Section 11.5.1. Value applies to all components on Project.
3) δ_{xA} = Deflection at Building Level x of Structure A.
4) δ_{yA} = Deflection at Building Level y of Structure A.
5) δ_{yB} = Deflection at Building Level y of Structure B.
6) h_x = Height of Level x to which Upper Connection Point Is Attached: Determine for each component by Delegated Design Contractor from Project Drawings and manufacturer's data.
7) h_y = Height of Level y to which Upper Connection Point Is Attached: Determine for each component by Delegated Design Contractor from Project Drawings and manufacturer's data.
8) Δ_{aA} = Allowable Story Drift for Structure A.
9) Δ_{aB} = Allowable Story Drift for Structure B.
10) h_{sx} = Story Height Used in the Definition of Allowable Drift Δ_a.

d. Component Fundamental Period T_p: Calculated by Delegated Design Contractor using methods explained in ASCE/SEI 7-16, Paragraph 13.3.3. Factors below must be obtained for this calculation:

1) W_p = Component Operating Weight: Determined by Contractor from Project Drawings and manufacturer's data.
2) g = Gravitational Acceleration.
3) K_p = Combined Stiffness of Component, Supports, and Attachments: Determined by delegated design seismic engineer.

C. Wind-Load Design Calculations:

1. Perform calculations to obtain force information necessary to properly select wind-load-restraint devices, fasteners, and anchorage. Perform calculations using methods acceptable to applicable code authorities and as presented in ASCE/SEI 7-16. Where "ASCE/SEI 7" is used throughout this Section, it is to be understood that the edition referred to in this subparagraph is intended as referenced throughout the Section Text unless otherwise noted.

a. Data indicated below that are specific to individual pieces of equipment must be obtained by Contractor and must be included in individual component submittal packages.

b. Coordinate design wind-load calculations with seismic load calculations for equipment requiring both seismic and wind-load reinforcement. Comply with requirements in other Sections in addition to those in this Section for equipment mounted outdoors.

2. Design wind pressure "p" for external sidewall-mounted equipment such as louvers is to be calculated by Delegated Design Contractor using methods in ASCE/SEI 7-16, Ch. 30. Perform calculations in accordance with one of the following, as applicable:

   a. PART 1: Low-Rise Buildings.
   b. PART 2: Low-Rise Buildings (Simplified).
   c. PART 3: Buildings with "h" less than 60 feet.
   d. PART 4: Buildings with "h" greater than 60 feet and less than 160 feet.
   e. PART 5: Open Buildings.

3. Design wind pressure "p" for rooftop equipment is to be calculated by Delegated Design Contractor using methods in ASCE/SEI 7-16, Ch. 30, PART 6: Building Appurtenances and Rooftop Structures and Equipment.
   a. Risk Category: See Structural Contract Documents for information.
   b. h = Mean Roof Height: See Architectural/Structural Contract Documents for information.
   c. V = Basic Wind Speed: See Architectural/Structural Contract Documents for information.
   d. K---d = Wind Directionality Factor: Obtain from ASCE/SEI 7-16 or ASCE/SEI 7-10 Section 26.6 and Table 26.6-1 or other source approved by authorities having jurisdiction..
   e. Exposure Category: Obtain from ASCE/SEI 7-16 or ASCE/SEI 7-10 Section 26.7 or other source approved by authorities having jurisdiction.
   f. K_{zt} = Topographic Factor: Obtain from ASCE/SEI 7-16 or ASCE/SEI 7-10 Section 26.8 and Table 26.8-1 or other source approved by authorities having jurisdiction..
   g. K_e = Ground Elevation Factor: Obtain from ASCE/SEI 7-16 or ASCE/SEI 7-10 Section 26.8 and Table 26.8-1 or other source approved by authorities having jurisdiction..
   h. K_z = Velocity Pressure Exposure Coefficient (Evaluated at Height z): Obtain from ASCE/SEI 7-16 Section 26.10.1 or other source approved by authorities having jurisdiction.
   i. K_h = Velocity Pressure Exposure Coefficient (Evaluated at Height h): Obtain from ASCE/SEI 7-16 Section 26.10.1 or other source approved by authorities having jurisdiction.
   j. q_z = Velocity Pressure: Value calculated by delegated wind-load design Contractor using methods detailed in ASCE/SEI 7-16 Section 26.10.1 or other source approved by authorities having jurisdiction.
   k. q_h = Velocity Pressure: Value calculated by delegated wind-load design Contractor using methods detailed in ASCE/SEI 7-16 Section 26.10.1 or other source approved by authorities having jurisdiction.
   l. G = Gust-Effect Factor: Obtain from ASCE/SEI 7-16 Section 26.11 or other source approved by authorities having jurisdiction.
   m. Enclosure Classification: Obtain from ASCE/SEI 7-16 or ASCE/SEI 7-10 Section 26.12 or other source approved by authorities having jurisdiction.
   n. GC_{pi} = Internal Pressure Coefficient: Obtain from ASCE/SEI 7-16 or ASCE/SEI 7-10 Table 26.13-1 or other source approved by authorities having jurisdiction.

D. Consequential Damage: Provide additional seismic restraints for suspended HVAC components or anchorage of floor-, roof-, or wall-mounted HVAC components as indicated in ASCE/SEI 7-16

so that failure of a non-essential or essential HVAC component will not cause failure of any other essential architectural, mechanical, or electrical building component.

E. Fire/Smoke Resistance: Seismic- and wind-load-restraint devices that are not constructed of ferrous metals must have a maximum flame-spread index of 25 and maximum smoke-developed index of 50 when tested by an NRTL in accordance with ASTM E84 or UL 723, and be so labeled.

F. Component Supports:

1. Load ratings, features, and applications of all reinforcement components must be based on testing standards of a nationally recognized testing agency.
2. All component support attachments must comply with force and displacement resistance requirements of ASCE/SEI 7-16 Section 13.6.

2.2 ELASTOMERIC ISOLATION PADS

A. Elastomeric Isolation Pads.

1. Basis-of-Design Product: Subject to compliance with requirements, provide Kinetics Noise Control, Inc; or a comparable product by one of the following:

   a. CADDY; brand of nVent Electrical plc.
   b. VMC GROUP.
   c. Vibration Eliminator Co., Inc.

2. Source Limitations: Obtain elastomeric isolation pads from single manufacturer.
3. Fabrication: Single or multiple layers of sufficient durometer stiffness for uniform loading over pad area.
4. Size: Factory or field cut to match requirements of supported equipment.
5. Pad Material: Oil and water resistant with elastomeric properties. Neoprene rubber, silicone rubber, or other elastomeric material.
6. Surface Pattern: Smooth, ribbed, or waffle pattern.
7. Infused nonwoven cotton or synthetic fibers.
8. Load-bearing metal plates adhered to pads.
9. Sandwich-Core Material: Resilient and elastomeric.

   a. Surface Pattern: Smooth, ribbed, or waffle pattern.
   b. Infused nonwoven cotton or synthetic fibers.

2.3 ELASTOMERIC ISOLATION MOUNTS

A. Double-Deflection, Elastomeric Isolation Mounts.

1. Basis-of-Design Product: Subject to compliance with requirements, provide Kinetics Noise Control, Inc; or a comparable product by one of the following:

   a. CADDY; brand of nVent Electrical plc.
   b. VMC GROUP.
   c. Vibration Eliminator Co., Inc.

2. Source Limitations: Obtain double-deflection, elastomeric isolation mounts from single manufacturer.
3. Mounting Plates:

a. Top Plate: Encapsulated steel load transfer top plates, factory drilled and threaded with threaded studs or bolts.
b. Baseplate: Encapsulated steel bottom plates with holes provided for anchoring to support structure.

4. Elastomeric Material: Molded, oil- and water-resistant neoprene rubber, silicone rubber, or other elastomeric material.

2.4 RESTRAINED ELASTOMERIC ISOLATION MOUNTS

A. Restrained Elastomeric Isolation Mounts.

1. Basis-of-Design Product: Subject to compliance with requirements, provide Kinetics Noise Control, Inc; or a comparable product by one of the following:

   a. CADDY; brand of nVent Electrical plc.
   b. VMC GROUP.
   c. Vibration Eliminator Co., Inc.

2. Source Limitations: Obtain restrained elastomeric isolation mounts from single manufacturer.
3. Description: All-directional isolator with seismic restraints containing two separate and opposing elastomeric elements that prevent central threaded element and attachment hardware from contacting the housing during normal operation.

   a. Housing: Cast-ductile iron or welded steel.
   b. Elastomeric Material: Molded, oil-resistant rubber, neoprene, or other elastomeric material.

2.5 OPEN-SPRING ISOLATORS

A. Freestanding, Laterally Stable, Open-Spring Isolators.

1. Basis-of-Design Product: Subject to compliance with requirements, provide Kinetics Noise Control, Inc; or a comparable product by one of the following:

   a. CADDY; brand of nVent Electrical plc.
   b. VMC GROUP.
   c. Vibration Eliminator Co., Inc.

2. Source Limitations: Obtain freestanding, laterally stable, open-spring isolators from single manufacturer.
3. Outside Spring Diameter: Not less than 80 percent of the compressed height of the spring at rated load.
4. Minimum Additional Travel: 50 percent of the required deflection at rated load.
5. Lateral Stiffness: More than 80 percent of rated vertical stiffness.
6. Overload Capacity: Support 200 percent of rated load, fully compressed, without deformation or failure.
7. Baseplates: Factory-drilled steel plate for bolting to structure with an elastomeric isolator pad attached to the underside. Baseplates limit floor load to 500 psig.
8. Top Plate and Adjustment Bolt: Threaded top plate with adjustment bolt and cap screw to fasten and level equipment.

2.6 HOUSED-SPRING ISOLATORS

A. Freestanding, Laterally Stable, Open-Spring Isolators in Two-Part Telescoping Housing.

1. Basis-of-Design Product: Subject to compliance with requirements, provide Kinetics Noise Control, Inc; or a comparable product by one of the following:

   a. CADDY; brand of nVent Electrical plc.
   b. VMC GROUP.
   c. Vibration Eliminator Co., Inc.

2. Source Limitations: Obtain freestanding, laterally stable, open-spring isolators in two-part telescoping housing from single manufacturer.
3. Outside Spring Diameter: Not less than 80 percent of the compressed height of the spring at rated load.
4. Minimum Additional Travel: 50 percent of the required deflection at rated load.
5. Lateral Stiffness: More than 80 percent of rated vertical stiffness.
6. Overload Capacity: Support 200 percent of rated load, fully compressed, without deformation or failure.
7. Two-Part Telescoping Housing: A steel top and bottom frame separated by an elastomeric material and enclosing the spring isolators.

   a. Drilled base housing for bolting to structure with an elastomeric isolator pad attached to the underside. Bases limit floor load to 500 psig.
   b. Top housing with attachment and leveling bolt.

2.7 RESTRAINED-SPRING ISOLATORS

A. Freestanding, Laterally Stable, Open-Spring Isolators with Vertical-Limit Stop Restraint.

1. Basis-of-Design Product: Subject to compliance with requirements, provide Kinetics Noise Control, Inc; or a comparable product by one of the following:

   a. CADDY; brand of nVent Electrical plc.
   b. VMC GROUP.
   c. Vibration Eliminator Co., Inc.

2. Source Limitations: Obtain restrained-spring isolators from single manufacturer.
3. Housing: Steel housing with vertical-limit stops to prevent spring extension due to weight being removed.

   a. Base with holes for bolting to structure with an elastomeric isolator pad attached to the underside. Bases limit floor load to 500 psig.
   b. Top plate with threaded mounting holes.
   c. Internal leveling bolt that acts as blocking during installation.

4. Restraint: Limit stop as required for equipment and authorities having jurisdiction.
5. Outside Spring Diameter: Not less than 80 percent of the compressed height of the spring at rated load.
6. Minimum Additional Travel: 50 percent of the required deflection at rated load.
7. Lateral Stiffness: More than 80 percent of rated vertical stiffness.
8. Overload Capacity: Support 200 percent of rated load, fully compressed, without deformation or failure.

2.8 HOUSED-RESTRAINED-SPRING ISOLATORS

A. Freestanding, Steel, Open-Spring Isolators with Vertical-Limit Stop Restraint in Two-Part Telescoping Housing.

1. Basis-of-Design Product: Subject to compliance with requirements, provide Kinetics Noise Control, Inc; or a comparable product by one of the following:

   a. CADDY; brand of nVent Electrical plc.
   b. VMC GROUP.
   c. Vibration Eliminator Co., Inc.

2. Source Limitations: Obtain freestanding, open-spring isolators with vertical-limit stop restraints from single manufacturer.
3. Two-Part Telescoping Housing: A steel top and bottom frame separated by an elastomeric material and enclosing the spring isolators. Housings are equipped with adjustable snubbers to limit vertical movement.

   a. Drilled base housing for bolting to structure with an elastomeric isolator pad attached to the underside. Bases limit floor load to 500 psig.
   b. Threaded top housing with adjustment bolt and cap screw to fasten and level equipment.

4. Outside Spring Diameter: Not less than 80 percent of the compressed height of the spring at rated load.
5. Minimum Additional Travel: 50 percent of the required deflection at rated load.
6. Lateral Stiffness: More than 80 percent of rated vertical stiffness.
7. Overload Capacity: Support 200 percent of rated load, fully compressed, without deformation or failure.

2.9 PIPE-RISER RESILIENT SUPPORT

A. All-Directional, Acoustical Pipe Anchor Consisting of Two Steel Tubes Separated by a Minimum 1/2-inch-Thick Neoprene.

1. Basis-of-Design Product: Subject to compliance with requirements, provide Kinetics Noise Control, Inc; or a comparable product by one of the following:

   a. Vibration Eliminator Co., Inc.
   b. Vibration Management Corp.

2. Source Limitations: Obtain all-directional, acoustical pipe anchor from single manufacturer.
3. Vertical-Limit Stops: Steel and neoprene vertical-limit stops arranged to prevent vertical travel in both directions.
4. Maximum Load Per Support: 500 psig on isolation material providing equal isolation in all directions.

2.10 RESILIENT PIPE GUIDES

A. Telescopic Arrangement of Two Steel Tubes or Post and Sleeve Arrangement Separated by a Minimum 1/2-inch-Thick Neoprene.

1. Basis-of-Design Product: Subject to compliance with requirements, provide Kinetics Noise Control, Inc; or a comparable product by one of the following:

   a. VMC GROUP.
   b. Vibration Eliminator Co., Inc.

2. Source Limitations: Obtain resilient pipe guides from single manufacturer.
3. Factory-Set Height Guide with Shear Pin: Shear pin to be removable and reinsertable to allow for selection of pipe movement. Guides to be capable of motion to meet location requirements.

2.11 ELASTOMERIC HANGERS

A. Elastomeric Mount in a Steel Frame with Upper and Lower Steel Hanger Rods.

1. Basis-of-Design Product: Subject to compliance with requirements, provide Kinetics Noise Control, Inc; or a comparable product by one of the following:

   a. CADDY; brand of nVent Electrical plc.
   b. VMC GROUP.
   c. Vibration Eliminator Co., Inc.

2. Source Limitations: Obtain elastomeric hangers from a single manufacturer.
3. Frame: Steel, fabricated with a connection for an upper threaded hanger rod and an opening on the underside to allow for a maximum of 30 degrees of angular lower hanger-rod misalignment without binding or reducing isolation efficiency.
4. Damping Element: Molded, oil-resistant rubber, neoprene, or other elastomeric material with a projecting bushing for the underside opening preventing steel to steel contact.

2.12 SPRING HANGERS

A. Combination Coil-Spring and Elastomeric-Insert Hanger with Spring and Insert in Compression.

1. Basis-of-Design Product: Subject to compliance with requirements, provide Kinetics Noise Control, Inc; or a comparable product by one of the following:

   a. CADDY; brand of nVent Electrical plc.
   b. VMC GROUP.
   c. Vibration Eliminator Co., Inc.

2. Source Limitations: Obtain spring hangers from single manufacturer.
3. Frame: Steel, fabricated for connection to threaded hanger rods and to allow for a maximum of 30 degrees of angular hanger-rod misalignment without binding or reducing isolation efficiency.
4. Outside Spring Diameter: Not less than 80 percent of the compressed height of the spring at rated load.
5. Minimum Additional Travel: 50 percent of the required deflection at rated load.
6. Lateral Stiffness: More than 80 percent of rated vertical stiffness.
7. Overload Capacity: Support 200 percent of rated load, fully compressed, without deformation or failure.
8. Elastomeric Element: Molded, oil-resistant rubber or neoprene. Steel-washer-reinforced cup to support spring and bushing projecting through bottom of frame.

9. Adjustable Vertical Stop: Steel washer with neoprene washer "up-stop" on lower threaded rod.
10. Self-centering hanger-rod cap to ensure concentricity between hanger rod and support spring coil.

2.13 SNUBBERS

A. Basis-of-Design Product: Subject to compliance with requirements, provide Kinetics Noise Control, Inc; or a comparable product by one of the following:

1. CADDY; brand of nVent Electrical plc.
2. VMC GROUP.
3. Vibration Management Corp.

B. Source Limitations: Obtain snubbers from single manufacturer.

C. Description: Factory fabricated using welded structural-steel shapes and plates, anchor bolts, and replaceable resilient isolation washers and bushings.

1. Post-Installed Concrete Anchor Bolts: Secure to concrete surface with post-installed concrete anchors. Anchors to be seismically prequalified in accordance with ACI 355.2 testing and designated in accordance with ACI 318-14 Ch. 17 for 2015 or 2018 IBC.
2. Preset Concrete Inserts: Seismically prequalified in accordance with ICC-ES AC446 testing.
3. Anchors in Masonry: Design in accordance with TMS 402.
4. Resilient Isolation Washers and Bushings: Oil- and water-resistant neoprene.
5. Resilient Cushion: Maximum 1/4-inch air gap, and minimum 1/4 inch thick.

2.14 RESTRAINTS - RIGID TYPE

A. Basis-of-Design Product: Subject to compliance with requirements, provide Cooper B-line; brand of Eaton, Electrical Sector; or a comparable product by one of the following:

1. CADDY; brand of nVent Electrical plc.
2. Unistrut; Atkore International.
3. VMC GROUP.

B. Source Limitations: Obtain rigid-type restraints from single manufacturer.

C. Description: Shop- or field-fabricated bracing assembly made of AISI S110-07-S1 slotted steel channels, ANSI/ASTM A53/A53M steel pipe as per NFPA 13, or other rigid steel brace member. Includes accessories for attachment to braced component at one end and to building structure at the other end and other matching components and with corrosion-resistant coating; rated in tension, compression, and torsion forces.

2.15 RESTRAINTS - CABLE TYPE

A. Basis-of-Design Product: Subject to compliance with requirements, provide Gripple Inc. ; GS Seismic Bracing Kits. or a comparable product by one of the following:

1. CADDY; brand of nVent Electrical plc.
2. Cooper B-line; brand of Eaton, Electrical Sector.

3. VMC GROUP.

B. Source Limitations: Obtain cable-type restraints from single manufacturer.

C. Seismic-Restraint Cables: ASTM A1023/A1023M galvanized or ASTM A603 galvanized-steel cables. End connections made of steel assemblies with thimbles, brackets, swivel, and bolts designed for seismic-restraining cable service; with fittings attached by means of poured socket, swaged socket or mechanical (Flemish eye) loop.

D. Restraint cable assembly with cable fittings must comply with ASCE/SEI 19. All cable fittings and complete cable assembly must maintain the minimum cable breaking force. U-shaped cable clips and wedge-type end fittings do not comply and are unacceptable.

2.16 RESTRAINT ACCESSORIES

A. Basis-of-Design Product: Subject to compliance with requirements, provide Cooper B-line; brand of Eaton, Electrical Sector; or a comparable product by one of the following:

1. CADDY; brand of nVent Electrical plc.
2. Unistrut; Atkore International.

B. Source Limitations: Obtain restraint accessories from single manufacturer.

C. Hanger-Rod Stiffener: Steel tube or steel slotted-support-system sleeve with internally bolted connections or Reinforcing steel angle clamped to hanger rod. Non-metallic stiffeners are unacceptable.

D. Hinged and Swivel Brace Attachments: Multifunctional steel connectors for attaching hangers to rigid channel bracings and restraint cables.

E. Bushings for Floor-Mounted Equipment Anchor Bolts: Neoprene bushings designed for rigid equipment mountings, and matched to type and size of anchor bolts and studs.

F. Bushing Assemblies for Wall-Mounted Equipment Anchorage: Assemblies of neoprene elements and steel sleeves designed for rigid equipment mountings, and matched to type and size of attachment devices used.

G. Resilient Isolation Washers and Bushings: One-piece, molded, oil- and water-resistant neoprene, with a flat washer face.

2.17 POST-INSTALLED CONCRETE ANCHORS

A. Mechanical Anchor Bolts:

1. Basis-of-Design Product: Subject to compliance with requirements, provide Cooper B-line; brand of Eaton, Electrical Sector; or a comparable product by one of the following:

a. Powers Fasteners.
b. Simpson Strong-Tie Co., Inc.
c. Unistrut; Atkore International.

2. Source Limitations: Obtain mechanical anchor bolts from single manufacturer.

3. Drilled-in and stud-wedge or female-wedge type in zinc-coated steel for interior applications and stainless steel for exterior applications. Select anchor bolts with strength for anchor and as tested according to ASTM E488/E488M.

B. Adhesive Anchor Bolts:

1. Basis-of-Design Product: Subject to compliance with requirements, provide Cooper B-line; brand of Eaton, Electrical Sector; or a comparable product by one of the following:

   a. Powers Fasteners.
   b. Simpson Strong-Tie Co., Inc.
   c. Unistrut; Atkore International.

2. Source Limitations: Obtain adhesive anchor bolts from single manufacturer.
3. Drilled-in and capsule anchor system containing PVC or urethane methacrylate-based resin and accelerator, or injected polymer or hybrid mortar adhesive. Provide anchor bolts and hardware with zinc-coated steel for interior applications and stainless steel for exterior applications. Select anchor bolts with strength required for anchor and as tested according to ASTM E488/E488M.

C. Provide post-installed concrete anchors that have been prequalified for use in wind-load applications. Post-installed concrete anchors must comply with all requirements of ASCE/SEI 7-16, Ch. 13.

1. Prequalify post-installed anchors in concrete in accordance with ACI 355.2 or other approved qualification testing procedures.
2. Prequalify post-installed anchors in masonry in accordance with approved qualification procedures.

2.18 CONCRETE INSERTS

A. <Double click here to find, evaluate, and insert list of manufacturers and products.>

B. Source Limitations: Obtain concrete inserts from single manufacturer.

C. Provide preset concrete inserts that are seismically prequalified in accordance with ICC-ES AC466 testing.

D. Comply with ANSI/MSS SP-58.

2.19 VIBRATION ISOLATION EQUIPMENT BASES

A. Basis-of-Design Product: Subject to compliance with requirements, provide Kinetics Noise Control, Inc; or a comparable product by one of the following:

1. CADDY; brand of nVent Electrical plc.
2. VMC GROUP.
3. Vibration Eliminator Co., Inc.

B. Source Limitations: Obtain vibration isolation equipment bases from single manufacturer.

C. Steel Rails: Factory-fabricated, welded, structural-steel rails.

1. Design Requirements: Lowest possible mounting height with not less than 1-inch clearance above the floor. Include equipment anchor bolts and auxiliary motor slide rails.

    a. Include supports for suction and discharge elbows for pumps.

2. Structural Steel: Steel shapes, plates, and bars complying with ASTM A36/A36M. Rails to have shape to accommodate supported equipment.
3. Support Brackets: Factory-welded steel brackets on frame for outrigger isolation mountings and to provide for anchor bolts and equipment support.

D. Steel Bases: Factory-fabricated, welded, structural-steel bases and rails.

1. Design Requirements: Lowest possible mounting height with not less than 1-inch clearance above the floor. Include equipment anchor bolts and auxiliary motor slide bases or rails.

    a. Include supports for suction and discharge elbows for pumps.

2. Structural Steel: Steel shapes, plates, and bars complying with ASTM A36/A36M. Bases to have shape to accommodate supported equipment.
3. Support Brackets: Factory-welded steel brackets on frame for outrigger isolation mountings and to provide for anchor bolts and equipment support.

E. Concrete Inertia Base: Factory-fabricated, welded, structural-steel bases and rails ready for placement of cast-in-place concrete.

1. Design Requirements: Lowest possible mounting height with not less than 1-inch clearance above the floor. Include equipment anchor bolts and auxiliary motor slide bases or rails.

    a. Include supports for suction and discharge elbows for pumps.

2. Structural Steel: Steel shapes, plates, and bars complying with ASTM A36/A36M. Bases to have shape to accommodate supported equipment.
3. Support Brackets: Factory-welded steel brackets on frame for outrigger isolation mountings and to provide for anchor bolts and equipment support.
4. Fabrication: Fabricate steel templates to hold equipment anchor-bolt sleeves and anchors in place during placement of concrete. Obtain anchor-bolt templates from supported equipment manufacturer.

2.20 RESTRAINED ISOLATION ROOF-CURB RAILS

A. Basis-of-Design Product: Subject to compliance with requirements, provide Kinetics Noise Control, Inc; or a comparable product by one of the following:

1. CADDY; brand of nVent Electrical plc.
2. Thybar Corporation.
3. VMC GROUP.
4. Vibration Eliminator Co., Inc.

B. Source Limitations: Obtain restrained isolation roof-curb rails from single manufacturer.

C. Description: Factory-assembled, fully enclosed, insulated, air- and watertight curb rail designed to resiliently support equipment and to withstand seismic and wind forces.

D. Upper Frame: To provide continuous support for equipment and to be captive to resiliently resist seismic and wind forces.

E. Lower Support Assembly: To be formed sheet metal section containing adjustable and removable steel springs that support the upper frame. Lower support assembly to have a means for attaching to building structure and a wood nailer for attaching roof materials, and to be insulated with a minimum of 2 inches of rigid, glass-fiber insulation on inside of assembly. Mount adjustable, restrained-spring isolators on elastomeric vibration isolation pads and provide access ports, for level adjustment, with removable waterproof covers at all isolator locations. Locate isolators so they are accessible for adjustment at any time during the life of the installation without interfering with integrity of roof.

F. Snubber Bushings: All-directional, elastomeric snubber bushings at least 1/4 inch thick.

G. Water Seal: Galvanized sheet metal with EPDM seals at corners, attached to upper support frame, extending down past wood nailer of lower support assembly, and counterflashed over roof materials.

PART 3 - EXECUTION

3.1 EXAMINATION

A. Examine areas and equipment to receive vibration isolation and seismic and wind control devices for compliance with requirements for installation tolerances and other conditions affecting performance of the Work.

B. Examine roughing-in of reinforcement and cast-in-place anchors to verify actual locations before installation.

C. Proceed with installation only after unsatisfactory conditions have been corrected.

3.2 APPLICATIONS

A. Multiple Pipe Supports: Secure pipes to trapeze member with clamps approved for application by an agency acceptable to authorities having jurisdiction.

B. Hanger-Rod Stiffeners: Install where required to prevent buckling of hanger rods due to seismic forces.

C. Strength of Support and Seismic-Restraint Assemblies: Where not indicated, select sizes of components so strength is adequate to carry present and future static, wind load, and seismic loads within specified loading limits.

3.3 INSTALLATION OF VIBRATION-CONTROL, WIND-LOAD CONTROL, AND SEISMIC-RESTRAINT DEVICES

A. Provide vibration-control devices for systems and equipment where indicated in Equipment Schedules or Vibration-Control Devices Schedules, where indicated on Drawings, or where Specifications indicate they are to be installed on specific equipment and systems.

B. Provide seismic-restraint and wind-load control devices for systems and equipment where indicated in Equipment Schedules or Seismic-Restraint Devices Schedules, where indicated on Drawings, where Specifications indicate they are to be installed on specific equipment and systems, and where required by applicable codes.

C. Coordinate location of embedded connection hardware with supported equipment attachment and mounting points and with requirements for concrete reinforcement and formwork specified in Section 033000 "Cast-in-Place Concrete."

D. Installation of vibration isolators, wind-load restraints, must not cause any change of position of equipment, piping, or ductwork resulting in stresses or misalignment.

E. Comply with requirements in Section 077200 "Roof Accessories" for installation of roof curbs, equipment supports, and roof penetrations.

F. Equipment Restraints:

1. Install seismic snubbers on HVAC equipment mounted on vibration isolators. Locate snubbers as close as possible to vibration isolators and bolt to equipment base and supporting structure.
2. Install resilient bolt isolation washers on equipment anchor bolts where clearance between anchor and adjacent surface exceeds 0.125 inch.
3. Install seismic-restraint, and wind-load-restraint devices using methods approved by an agency acceptable to authorities having jurisdiction that provides required submittals for component.

G. Piping Restraints:

1. Comply with requirements in MSS SP-127.
2. Space lateral supports a maximum of 40 feet o.c., and longitudinal supports a maximum of 80 feet o.c.
3. Brace a change of direction longer than 12 feet.

H. Ductwork Restraints:

1. Install ducts with hangers and braces designed to support the duct and to restrain against seismic forces required by applicable building codes. Comply with SMACNA's "Seismic Restraint Manual: Guidelines for Mechanical Systems." and ASCE/SEI 7. Most stringent requirements shall apply
2. Space lateral supports a maximum of 40 feet o.c., and longitudinal supports a maximum of 80 feet o.c.
3. Brace a change of direction longer than 12 feet.
4. Select seismic-restraint devices with capacities adequate to carry static and seismic loads.
5. Install cable restraints on ducts that are suspended with vibration isolators.

I. Install seismic- and wind-load-restraint cables so they do not bend across edges of adjacent equipment or building structure.

J. Install seismic-restraint devices using methods approved by an agency acceptable to authorities having jurisdiction that provides required submittals for component.

K. Install bushing assemblies for anchor bolts for floor-mounted equipment, arranged to provide resilient media between anchor bolt and mounting hole in concrete base.

L. Install bushing assemblies for mounting bolts for wall-mounted equipment, arranged to provide resilient media where equipment or equipment-mounting channels are attached to wall.

M. Attachment to Structure: If specific attachment is not indicated, anchor bracing to structure at flanges of beams, at upper truss chords of bar joists, or at concrete members.

N. Mechanical Anchor Bolts:

1. Identify position of reinforcing steel and other embedded items prior to drilling holes for anchors. Do not damage existing reinforcing or embedded items during coring or drilling. Notify structural engineer if reinforcing steel or other embedded items are encountered during drilling. Locate and avoid prestressed tendons, electrical and telecommunications conduit, and gas lines.
2. Do not drill holes in concrete or masonry until concrete, mortar, or grout has achieved full design strength.
3. Wedge-Type Anchor Bolts: Protect threads from damage during anchor installation. Heavy-duty sleeve anchors to be installed with sleeve fully engaged in the structural element to which anchor is to be fastened.
4. Adhesive-Type Anchor Bolts: Clean holes to remove loose material and drilling dust prior to installation of adhesive. Place adhesive in holes proceeding from the bottom of the hole and progressing toward the surface in such a manner as to avoid introduction of air pockets in the adhesive.
5. Set anchors to manufacturer's recommended torque, using a torque wrench.
6. Install zinc-coated steel anchors for interior and stainless-steel anchors for exterior applications.

3.4 ACCOMMODATION OF DIFFERENTIAL SEISMIC MOTION

A. Provide flexible connections in piping systems where they cross structural seismic joints and other points where differential movement may occur. Provide adequate flexibility to accommodate differential movement as determined in accordance with ASCE/SEI 7. Comply with requirements in Section 232113 "Hydronic Piping" and Section 232116 "Hydronic Piping Specialties" for piping flexible connections.

3.5 INSTALLATION OF VIBRATION ISOLATION EQUIPMENT BASES

A. Coordinate location of embedded connection hardware with supported equipment attachment and mounting points and with requirements for concrete reinforcement and formwork specified in Section 033000 "Cast-in-Place Concrete."

B. Coordinate dimensions of steel equipment rails and bases, concrete inertia bases, and restrained isolation roof-curb rails with requirements of isolated equipment specified in this and other Sections. Where dimensions of these bases are indicated on Drawings, dimensions may require adjustment to accommodate actual isolated equipment.

3.6 ADJUSTING

A. Adjust isolators after system is at operating weight.

B. Adjust limit stops on restrained-spring isolators to mount equipment at normal operating height. After equipment installation is complete, adjust limit stops so they are out of contact during normal operation.

3.7 FIELD QUALITY CONTROL

A. Manufacturer's Field Service: Engage a factory-authorized service representative to test and inspect components, assemblies, and equipment installations, including connections.

B. Remove and replace malfunctioning units and retest as specified above.

C. Units will be considered defective if they do not pass tests and inspections.

D. Prepare test and inspection reports.

END OF SECTION 23 05 48

SECTION 23 05 53 - IDENTIFICATION FOR HVAC PIPING AND EQUIPMENT

PART 1 - GENERAL

1.1 RELATED DOCUMENTS

A. Drawings and general provisions of the Contract, including General and Supplementary Conditions and Division 01 Specification Sections, apply to this Section.

1.2 SUMMARY

A. Section Includes:

1. Equipment labels.
2. Warning signs and labels.
3. Pipe labels.
4. Duct labels.
5. Stencils.
6. Valve tags.
7. Warning tags.

1.3 ACTION SUBMITTALS

A. Product Data: For each type of product.

B. Samples: For color, letter style, and graphic representation required for each identification material and device.

C. Equipment Label Schedule: Include a listing of all equipment to be labeled with the proposed content for each label.

D. Valve numbering scheme.

E. Valve Schedules: For each piping system to include in maintenance manuals.

PART 2 - PRODUCTS

2.1 EQUIPMENT LABELS

A. Metal Labels for Equipment:

1. Manufacturers: Subject to compliance with requirements, available manufacturers offering products that may be incorporated into the Work include, but are not limited to, the following:

   a. Brady Corp.
   b. Champion America.
   c. Seton Identification Products; a Brady Corp. Co.

2. Material and Thickness: Brass, 0.032-inch, stainless steel, 0.025-inch, aluminum, 0.032-inch or anodized aluminum, 0.032-inch minimum thickness, and having predrilled or stamped holes for attachment hardware.
3. Letter Color: Black.
4. Background Color: White.
5. Minimum Label Size: Length and width vary for required label content, but not less than 2-1/2 by 3/4 inch.
6. Minimum Letter Size: 1/4 inch for name of units if viewing distance is less than 24 inches, 1/2 inch for viewing distances up to 72 inches, and proportionately larger lettering for greater viewing distances. Include secondary lettering two-thirds to three-quarters the size of principal lettering.
7. Fasteners: Stainless-steel rivets or self-tapping screws.
8. Adhesive: Contact-type permanent adhesive, compatible with label and with substrate.

B. Plastic Labels for Equipment:

1. Manufacturers: Subject to compliance with requirements, available manufacturers offering products that may be incorporated into the Work include, but are not limited to, the following:

   a. Brady Corp.
   b. Champion America.
   c. Seton Identification Products; a Brady Corp. Co.

2. Material and Thickness: Multilayer, multicolor, plastic labels for mechanical engraving, 1/8-inch-thick, and having predrilled holes for attachment hardware.
3. Letter Color: Black.
4. Background Color: White.
5. Maximum Temperature: Able to withstand temperatures up to 160 deg F.
6. Minimum Label Size: Length and width vary for required label content, but not less than 2-1/2 by 3/4 inch.
7. Minimum Letter Size: 1/4 inch for name of units if viewing distance is less than 24 inches, 1/2 inch for viewing distances up to 72 inches, and proportionately larger lettering for greater viewing distances. Include secondary lettering two-thirds to three-quarters the size of principal lettering.
8. Fasteners: Stainless-steel rivets or self-tapping screws.
9. Adhesive: Contact-type permanent adhesive, compatible with label and with substrate.

C. Label Content: Include equipment's Drawing designation or unique equipment number, Drawing numbers where equipment is indicated (plans, details, and schedules), and the Specification Section number and title where equipment is specified.

D. Equipment Label Schedule: For each item of equipment to be labeled, on 8-1/2-by-11-inch bond paper. Tabulate equipment identification number and identify Drawing numbers where equipment is indicated (plans, details, and schedules) and the Specification Section number and title where equipment is specified. Equipment schedule shall be included in operation and maintenance data.

2.2 WARNING SIGNS AND LABELS

A. Manufacturers: Subject to compliance with requirements, available manufacturers offering products that may be incorporated into the Work include, but are not limited to, the following:

1. Brady Corp.

2. Champion America.
3. Seton Identification Products; a Brady Corp. Co.

B. Material and Thickness: Multilayer, multicolor, plastic labels for mechanical engraving, 1/8-inch-thick, and having predrilled holes for attachment hardware.

C. Letter Color: Black.

D. Background Color: White.

E. Maximum Temperature: Able to withstand temperatures up to 160 deg F.

F. Minimum Label Size: Length and width vary for required label content, but not less than 2-1/2 by 3/4 inch.

G. Minimum Letter Size: 1/4 inch for name of units if viewing distance is less than 24 inches, 1/2 inch for viewing distances up to 72 inches, and proportionately larger lettering for greater viewing distances. Include secondary lettering two-thirds to three-quarters the size of principal lettering.

H. Fasteners: Stainless-steel rivets or self-tapping screws.

I. Adhesive: Contact-type permanent adhesive, compatible with label and with substrate.

J. Label Content: Include caution and warning information plus emergency notification instructions.

2.3 PIPE LABELS

A. Manufacturers: Subject to compliance with requirements, available manufacturers offering products that may be incorporated into the Work include, but are not limited to, the following:

1. Brady Corp.
2. Champion America.
3. Seton Identification Products; a Brady Corp. Co.

B. General Requirements for Manufactured Pipe Labels: Preprinted, color-coded, with lettering indicating service, and showing flow direction according to ASME A13.1.

C. Pretensioned Pipe Labels: Precoiled, semirigid plastic formed to cover full circumference of pipe and to attach to pipe without fasteners or adhesive.

D. Self-Adhesive Pipe Labels: Printed plastic with contact-type, permanent-adhesive backing.

E. Pipe Label Contents: Include identification of piping service using same designations or abbreviations as used on Drawings; also include pipe size and an arrow indicating flow direction.

1. Flow-Direction Arrows: Integral with piping system service lettering to accommodate both directions or as separate unit on each pipe label to indicate flow direction.
2. Lettering Size: Size letters according to ASME A13.1 for piping.

2.4 DUCT LABELS

A. Manufacturers: Subject to compliance with requirements, available manufacturers offering products that may be incorporated into the Work include, but are not limited to, the following:

1. Brady Corp.
2. Champion America.
3. Seton Identification Products; a Brady Corp. Co.

B. Material and Thickness: Multilayer, multicolor, plastic labels for mechanical engraving, 1/8-inch-thick, and having predrilled holes for attachment hardware.

C. Letter Color: Black.

D. Background Color: White.

E. Maximum Temperature: Able to withstand temperatures up to 160 deg F.

F. Minimum Label Size: Length and width vary for required label content, but not less than 2-1/2 by 3/4 inch.

G. Minimum Letter Size: 1/4 inch for name of units if viewing distance is less than 24 inches, 1/2 inch for viewing distances up to 72 inches, and proportionately larger lettering for greater viewing distances. Include secondary lettering two-thirds to three-quarters the size of principal lettering.

H. Fasteners: Stainless-steel rivets or self-tapping screws.

I. Adhesive: Contact-type permanent adhesive, compatible with label and with substrate.

J. Duct Label Contents: Include identification of duct service using same designations or abbreviations as used on Drawings; also include duct size and an arrow indicating flow direction.

1. Flow-Direction Arrows: Integral with duct system service lettering to accommodate both directions or as separate unit on each duct label to indicate flow direction.

2.5 STENCILS

A. Stencils for Piping:

1. Manufacturers: Subject to compliance with requirements, available manufacturers offering products that may be incorporated into the Work include, but are not limited to, the following:

   a. Brady Corp.
   b. Champion America.
   c. Seton Identification Products; a Brady Corp. Co.

2. Lettering Size: Size letters according to ASME A13.1 for piping.
3. Stencil Material: Fiberboard or metal.
4. Stencil Paint: Exterior, gloss, alkyd enamel or acrylic enamel in colors complying with recommendations in ASME A13.1 unless otherwise indicated. Paint may be in pressurized spray-can form.

5. Identification Paint: Exterior, alkyd enamel or acrylic enamel in colors according to ASME A13.1 unless otherwise indicated. Paint may be in pressurized spray-can form.

B. Stencils for Ducts:

1. Manufacturers: Subject to compliance with requirements, available manufacturers offering products that may be incorporated into the Work include, but are not limited to, the following:

   a. Brimar Industries, Inc.
   b. Craftmark Pipe Markers.
   c. Marking Services Inc.

2. Lettering Size: Minimum letter height of 1-1/4 inches for viewing distances up to 15 feet and proportionately larger lettering for greater viewing distances.
3. Stencil Material: Fiberboard or metal.
4. Stencil Paint: Exterior, gloss, acrylic enamel. Paint may be in pressurized spray-can form.
5. Identification Paint: Exterior, acrylic enamel. Paint may be in pressurized spray-can form.

C. Stencils for Access Panels and Door Labels, Equipment Labels, and Similar Operational Instructions:

1. Manufacturers: Subject to compliance with requirements, available manufacturers offering products that may be incorporated into the Work include, but are not limited to, the following:

   a. Brimar Industries, Inc..
   b. Craftmark Pipe Markers.
   c. Marking Services Inc.

2. Lettering Size: Minimum letter height of 1/2 inch for viewing distances up to 72 inches and proportionately larger lettering for greater viewing distances.
3. Stencil Material: Fiberboard or metal.
4. Stencil Paint: Exterior, gloss, acrylic enamel. Paint may be in pressurized spray-can form.
5. Identification Paint: Exterior, acrylic enamel. Paint may be in pressurized spray-can form.

2.6 VALVE TAGS

A. Manufacturers: Subject to compliance with requirements, available manufacturers offering products that may be incorporated into the Work include, but are not limited to, the following:

1. Brimar Industries, Inc..
2. Craftmark Pipe Markers.
3. Marking Services Inc.

B. Description: Stamped or engraved with 1/4-inch letters for piping system abbreviation and 1/2-inch numbers.

1. Tag Material: aluminum, 0.032-inch or anodized aluminum, 0.032-inch minimum thickness, and having predrilled or stamped holes for attachment hardware.
2. Fasteners: Brass wire-link chain or beaded chain or S-hook.

C. Valve Schedules: For each piping system, on 8-1/2-by-11-inch bond paper. Tabulate valve number, piping system, system abbreviation (as shown on valve tag), location of valve (room or

space), normal-operating position (open, closed, or modulating), and variations for identification. Mark valves for emergency shutoff and similar special uses.

1. Valve-tag schedule shall be included in operation and maintenance data.

2.7 WARNING TAGS

A. Manufacturers: Subject to compliance with requirements, available manufacturers offering products that may be incorporated into the Work include, but are not limited to, the following:

1. Brimar Industries, Inc..
2. Craftmark Pipe Markers.
3. Marking Services Inc.
4. Seton Identification Products; a Brady Corporation Company.

B. Description: Preprinted or partially preprinted accident-prevention tags of plasticized card stock with matte finish suitable for writing.

1. Size: 3 by 5-1/4 inches minimum.
2. Fasteners: Brass grommet and wire.
3. Nomenclature: Large-size primary caption such as "DANGER," "CAUTION," or "DO NOT OPERATE."
4. Color: Safety-yellow background with black lettering.

PART 3 - EXECUTION

3.1 PREPARATION

A. Clean piping and equipment surfaces of substances that could impair bond of identification devices, including dirt, oil, grease, release agents, and incompatible primers, paints, and encapsulants.

3.2 GENERAL INSTALLATION REQUIREMENTS

A. Coordinate installation of identifying devices with completion of covering and painting of surfaces where devices are to be applied.

B. Coordinate installation of identifying devices with locations of access panels and doors.

C. Install identifying devices before installing acoustical ceilings and similar concealment.

3.3 EQUIPMENT LABEL INSTALLATION

A. Install or permanently fasten labels on each major item of mechanical equipment.

B. Locate equipment labels where accessible and visible.

3.4 PIPE LABEL INSTALLATION

A. Piping Color Coding: Painting of piping is specified in Section 099123 "Interior Painting."

B. Stenciled Pipe Label Option: Stenciled labels may be provided instead of manufactured pipe labels, at Installer's option. Install stenciled pipe labels, complying with ASME A13.1, with painted, color-coded bands or rectangles on each piping system.

1. Identification Paint: Use for contrasting background.
2. Stencil Paint: Use for pipe marking.

C. Pipe Label Locations: Locate pipe labels where piping is exposed or above accessible ceilings in finished spaces; machine rooms; accessible maintenance spaces such as shafts, tunnels, and plenums; and exterior exposed locations as follows:

1. Near each valve and control device.
2. Near each branch connection, excluding short takeoffs for fixtures and terminal units. Where flow pattern is not obvious, mark each pipe at branch.
3. Near penetrations and on both sides of through walls, floors, ceilings, and inaccessible enclosures.
4. At access doors, manholes, and similar access points that permit view of concealed piping.
5. Near major equipment items and other points of origination and termination.
6. Spaced at maximum intervals of 50 feet along each run. Reduce intervals to 25 feet in areas of congested piping and equipment.
7. On piping above removable acoustical ceilings. Omit intermediately spaced labels.

D. Directional Flow Arrows: Arrows shall be used to indicate direction of flow in pipes, including pipes where flow is allowed in both directions.

E. Pipe Label Color Schedule:

1. Chilled-Water Piping: White letters on a safety-green background.
2. Condenser-Water Piping: White letters on a safety-green background.
3. Heating Water Piping: White letters on a safety-green background.
4. Refrigerant Piping: Black letters on a safety-orange background.
5. Low-Pressure Steam Piping: White letters on a safety-purple background.
6. High-Pressure Steam Piping: Black letters on a safety-white background.
7. Steam Condensate Piping: White letters on a safety-purple background.

3.5 DUCT LABEL INSTALLATION

A. Install plastic-laminated or self-adhesive duct labels with permanent adhesive on air ducts in the following color codes:

1. Blue: For cold-air supply ducts.
2. Yellow: For hot-air supply ducts.
3. Green: For exhaust-, outside-, relief-, return-, and mixed-air ducts.

B. Stenciled Duct Label Option: Stenciled labels showing service and flow direction may be provided instead of plastic-laminated duct labels, at Installer's option.

C. Locate labels near points where ducts enter into and exit from concealed spaces and at maximum intervals of 50 feet in each space where ducts are exposed or concealed by removable ceiling system.

3.6 VALVE-TAG INSTALLATION

A. Install tags on valves and control devices in piping systems, except check valves, valves within factory-fabricated equipment units, shutoff valves, faucets, convenience and lawn-watering hose connections, and HVAC terminal devices and similar roughing-in connections of end-use fixtures and units. List tagged valves in a valve schedule.

B. Valve-Tag Application Schedule: Tag valves according to size, shape, and color scheme and with captions similar to those indicated in the following subparagraphs:

1. Valve-Tag Size and Shape:

   a. Chilled Water: 1-1/2 inches, round.
   b. Condenser Water: 1-1/2 inches, round.
   c. Refrigerant: 1-1/2 inches, round.
   d. Hot Water: 1-1/2 inches, round.
   e. Gas: 1-1/2 inches, round.
   f. Low-Pressure Steam: 1-1/2 inches, round.
   g. High-Pressure Steam: 1-1/2 inches, round.
   h. Steam Condensate: 1-1/2 inches, round.

2. Valve-Tag Colors:

   a. Toxic and Corrosive Fluids: Black letters on a safety-orange background.
   b. Flammable Fluids: Black letters on a safety-yellow background.
   c. Combustible Fluids: White letters on a safety-brown background.
   d. Potable and Other Water: White letters on a safety-green background.
   e. Compressed Air: White letters on a safety-blue background.

3.7 WARNING-TAG INSTALLATION

A. Write required message on, and attach warning tags to, equipment and other items where required.

END OF SECTION 23 05 53

SECTION 23 05 93 - TESTING, ADJUSTING, AND BALANCING FOR HVAC

PART 1 - GENERAL

1.1 RELATED DOCUMENTS

A. Drawings and general provisions of the Contract, including General and Supplementary Conditions and Division 01 Specification Sections, apply to this Section.

1.2 SUMMARY

A. Section Includes:

1. Balancing Air Systems:

    a. Constant-volume air systems.
    b. Variable-air-volume systems.
    c. Induction-unit systems.

2. Balancing Hydronic Piping Systems:

    a. Constant-flow hydronic systems.
    b. Variable-flow hydronic systems.
    c. Primary-secondary hydronic systems.

3. Balancing steam systems.
4. Testing, Adjusting, and Balancing Equipment:

    a. Heat exchangers.
    b. Motors.
    c. Chillers.
    d. Cooling towers.
    e. Condensing units.
    f. Boilers.
    g. Heat-transfer coils.

5. Testing, adjusting, and balancing existing systems and equipment.
6. Sound tests.
7. Vibration tests.
8. Duct leakage tests.
9. Control system verification.

1.3 DEFINITIONS

A. AABC: Associated Air Balance Council.

B. BAS: Building automation systems.

C. NEBB: National Environmental Balancing Bureau.

D. TAB: Testing, adjusting, and balancing.

E. TABB: Testing, Adjusting, and Balancing Bureau.

F. TAB Specialist: An independent entity meeting qualifications to perform TAB work.

G. TDH: Total dynamic head.

1.4 PREINSTALLATION MEETINGS

A. TAB Conference: If requested by the Owner, conduct a TAB conference at Project site after approval of the TAB strategies and procedures plan to develop a mutual understanding of the details. Provide a minimum of 14 days' advance notice of scheduled meeting time and location.

1. Minimum Agenda Items:

a. The Contract Documents examination report.
b. The TAB plans.
c. Needs for coordination and cooperation of trades and subcontractors.
d. Proposed procedures for documentation and communication flow.

1.5 ACTION SUBMITTALS

A. LEED Submittals:

1. Air-Balance Report for Prerequisite IEQ 1: Documentation indicating that work complies with ASHRAE 62.1, Section 7.2.2 - "Air Balancing."
2. TAB Report for Prerequisite EA 2: Documentation indicating that work complies with ASHRAE/IESNA 90.1, Section 6.7.2.3 - "System Balancing."

1.6 INFORMATIONAL SUBMITTALS

A. Qualification Data: Within 30 days of Contractor's Notice to Proceed, submit documentation that the TAB specialist and this Project's TAB team members meet the qualifications specified in "Quality Assurance" Article.

B. Contract Documents Examination Report: Within 30 days of Contractor's Notice to Proceed, submit the Contract Documents review report as specified in Part 3.

C. Strategies and Procedures Plan: Within 30 days of Contractor's Notice to Proceed, submit TAB strategies and step-by-step procedures as specified in "Preparation" Article.

D. System Readiness Checklists: Within 30 days of Contractor's Notice to Proceed, submit system readiness checklists as specified in "Preparation" Article.

E. Examination Report: Submit a summary report of the examination review required in "Examination" Article.

F. Certified TAB reports.

G. Sample report forms.

H. Instrument calibration reports, to include the following:

1. Instrument type and make.
2. Serial number.
3. Application.
4. Dates of use.
5. Dates of calibration.

1.7 QUALITY ASSURANCE

A. TAB Specialists Qualifications: Certified by NEBB or TABB.

1. TAB Field Supervisor: Employee of the TAB specialist and certified by NEBB or TABB.
2. TAB Technician: Employee of the TAB specialist and certified by NEBB or TABB as a TAB technician.

B. Instrumentation Type, Quantity, Accuracy, and Calibration: Comply with requirements in ASHRAE 111, Section 4, "Instrumentation."

C. ASHRAE Compliance: Applicable requirements in ASHRAE 62.1, Section 7.2.2 - "Air Balancing."

D. ASHRAE/IESNA Compliance: Applicable requirements in ASHRAE/IESNA 90.1, Section 6.7.2.3 - "System Balancing."

1.8 FIELD CONDITIONS

A. Full Owner Occupancy: Owner will occupy the site and existing building during entire TAB period. Cooperate with Owner during TAB operations to minimize conflicts with Owner's operations.

B. Partial Owner Occupancy: Owner may occupy completed areas of building before Substantial Completion. Cooperate with Owner during TAB operations to minimize conflicts with Owner's operations.

PART 2 - PRODUCTS (Not Applicable)

PART 3 - EXECUTION

3.1 EXAMINATION

A. Examine the Contract Documents to become familiar with Project requirements and to discover conditions in systems designs that may preclude proper TAB of systems and equipment.

B. Examine installed systems for balancing devices, such as test ports, gage cocks, thermometer wells, flow-control devices, balancing valves and fittings, and manual volume dampers. Verify that locations of these balancing devices are applicable for intended purpose and are accessible.

C. Examine the approved submittals for HVAC systems and equipment.

D. Examine ceiling plenums and underfloor air plenums used for supply, return, or relief air to verify that they are properly separated from adjacent areas. Verify that penetrations in plenum walls are sealed and fire-stopped if required.

E. Examine equipment performance data including fan and pump curves.

1. Relate performance data to Project conditions and requirements, including system effects that can create undesired or unpredicted conditions that cause reduced capacities in all or part of a system.
2. Calculate system-effect factors to reduce performance ratings of HVAC equipment when installed under conditions different from the conditions used to rate equipment performance. To calculate system effects for air systems, use tables and charts found in AMCA 201, "Fans and Systems," or in SMACNA's "HVAC Systems - Duct Design." Compare results with the design data and installed conditions.

F. Examine system and equipment installations and verify that field quality-control testing, cleaning, and adjusting specified in individual Sections have been performed.

G. Examine test reports specified in individual system and equipment Sections.

H. Examine HVAC equipment and verify that bearings are greased, belts are aligned and tight, filters are clean, and equipment with functioning controls is ready for operation.

I. Examine terminal units, such as variable-air-volume boxes, and verify that they are accessible, and their controls are connected and functioning.

J. Examine strainers. Verify that startup screens have been replaced by permanent screens with indicated perforations.

K. Examine control valves for proper installation for their intended function of throttling, diverting, or mixing fluid flows.

L. Examine heat-transfer coils for correct piping connections and for clean and straight fins.

M. Examine system pumps to ensure absence of entrained air in the suction piping.

N. Examine operating safety interlocks and controls on HVAC equipment.

O. Report deficiencies discovered before and during performance of TAB procedures. Observe and record system reactions to changes in conditions. Record default set points if different from indicated values.

3.2 PREPARATION

A. Prepare a TAB plan that includes the following:

1. Equipment and systems to be tested.
2. Strategies and step-by-step procedures for balancing the systems.
3. Instrumentation to be used.
4. Sample forms with specific identification for all equipment.

B. Perform system-readiness checks of HVAC systems and equipment to verify system readiness for TAB work. Include, at a minimum, the following:

1. Airside:

    a. Verify that leakage and pressure tests on air distribution systems have been satisfactorily completed.
    b. Duct systems are complete with terminals installed.
    c. Volume, smoke, and fire dampers are open and functional.
    d. Clean filters are installed.
    e. Fans are operating, free of vibration, and rotating in correct direction.
    f. Variable-frequency controllers' startup is complete, and safeties are verified.
    g. Automatic temperature-control systems are operational.
    h. Ceilings are installed.
    i. Windows and doors are installed.
    j. Suitable access to balancing devices and equipment is provided.

2. Hydronics:

    a. Verify leakage and pressure tests on water distribution systems have been satisfactorily completed.
    b. Piping is complete with terminals installed.
    c. Water treatment is complete.
    d. Systems are flushed, filled, and air purged.
    e. Strainers are pulled and cleaned.
    f. Control valves are functioning per the sequence of operation.
    g. Shutoff and balance valves have been verified to be 100 percent open.
    h. Pumps are started and proper rotation is verified.
    i. Pump gage connections are installed directly at pump inlet and outlet flanges or in discharge and suction pipe prior to valves or strainers.
    j. Variable-frequency controllers' startup is complete, and safeties are verified.
    k. Suitable access to balancing devices and equipment is provided.

3.3 GENERAL PROCEDURES FOR TESTING AND BALANCING

A. Perform testing and balancing procedures on each system according to the procedures contained in AABC's "National Standards for Total System Balance" and in this Section.

B. Cut insulation, ducts, pipes, and equipment cabinets for installation of test probes to the minimum extent necessary for TAB procedures.

    1. After testing and balancing, patch probe holes in ducts with same material and thickness as used to construct ducts.
    2. Install and join new insulation that matches removed materials. Restore insulation, coverings, vapor barrier, and finish according to Section 230713 "Duct Insulation," Section 230716 "HVAC Equipment Insulation," and Section 230719 "HVAC Piping Insulation."

C. Mark equipment and balancing devices, including damper-control positions, valve position indicators, fan-speed-control levers, and similar controls and devices, with paint or other suitable, permanent identification material to show final settings.

D. Take and report testing and balancing measurements in inch-pound (IP) units.

3.4 GENERAL PROCEDURES FOR BALANCING AIR SYSTEMS

A. Prepare test reports for both fans and outlets. Obtain manufacturer's outlet factors and recommended testing procedures. Cross-check the summation of required outlet volumes with required fan volumes.

B. Prepare schematic diagrams of systems' "as-built" duct layouts.

C. For variable-air-volume systems, develop a plan to simulate diversity.

D. Determine the best locations in main and branch ducts for accurate duct-airflow measurements.

E. Check airflow patterns from the outdoor-air louvers and dampers and the return- and exhaust-air dampers through the supply-fan discharge and mixing dampers.

F. Locate start-stop and disconnect switches, electrical interlocks, and motor starters.

G. Verify that motor starters are equipped with properly sized thermal protection.

H. Check dampers for proper position to achieve desired airflow path.

I. Check for airflow blockages.

J. Check condensate drains for proper connections and functioning.

K. Check for proper sealing of air-handling-unit components.

L. Verify that air duct system is sealed as specified in Section 233113 "Metal Ducts."

3.5 PROCEDURES FOR CONSTANT-VOLUME AIR SYSTEMS

A. Adjust fans to deliver total indicated airflows within the maximum allowable fan speed listed by fan manufacturer.

1. Measure total airflow.

    a. Set outside-air, return-air, and relief-air dampers for proper position that simulates minimum outdoor-air conditions.
    b. Where duct conditions allow, measure airflow by Pitot-tube traverse. If necessary, perform multiple Pitot-tube traverses to obtain total airflow.
    c. Where duct conditions are not suitable for Pitot-tube traverse measurements, a coil traverse may be acceptable.
    d. If a reliable Pitot-tube traverse or coil traverse is not possible, measure airflow at terminals and calculate the total airflow.

2. Measure fan static pressures as follows:

    a. Measure static pressure directly at the fan outlet or through the flexible connection.
    b. Measure static pressure directly at the fan inlet or through the flexible connection.
    c. Measure static pressure across each component that makes up the air-handling system.
    d. Report artificial loading of filters at the time static pressures are measured.

3. Review Record Documents to determine variations in design static pressures versus actual static pressures. Calculate actual system-effect factors. Recommend adjustments to accommodate actual conditions.
4. Obtain approval from Architect or commissioning authority for adjustment of fan speed higher or lower than indicated speed. Comply with requirements in HVAC Sections for air-handling units for adjustment of fans, belts, and pulley sizes to achieve indicated air-handling-unit performance.
5. Do not make fan-speed adjustments that result in motor overload. Consult equipment manufacturers about fan-speed safety factors. Modulate dampers and measure fan-motor amperage to ensure that no overload occurs. Measure amperage in full-cooling, full-heating, economizer, and any other operating mode to determine the maximum required brake horsepower.

B. Adjust volume dampers for main duct, submain ducts, and major branch ducts to indicated airflows.

1. Measure airflow of submain and branch ducts.
2. Adjust submain and branch duct volume dampers for specified airflow.
3. Re-measure each submain and branch duct after all have been adjusted.

C. Adjust air inlets and outlets for each space to indicated airflows.

1. Set airflow patterns of adjustable outlets for proper distribution without drafts.
2. Measure inlets and outlets airflow.
3. Adjust each inlet and outlet for specified airflow.
4. Re-measure each inlet and outlet after they have been adjusted.

D. Verify final system conditions.

1. Re-measure and confirm that minimum outdoor, return, and relief airflows are within design. Readjust to design if necessary.
2. Re-measure and confirm that total airflow is within design.
3. Re-measure all final fan operating data, rpms, volts, amps, and static profile.
4. Mark all final settings.
5. Test system in economizer mode. Verify proper operation and adjust if necessary.
6. Measure and record all operating data.
7. Record final fan-performance data.

3.6 PROCEDURES FOR VARIABLE-AIR-VOLUME SYSTEMS

A. Adjust the variable-air-volume systems as follows:

1. Verify that the system static pressure sensor is located two-thirds of the distance down the duct from the fan discharge.
2. Verify that the system is under static pressure control.
3. Select the terminal unit that is most critical to the supply-fan airflow. Measure inlet static pressure, and adjust system static pressure control set point so the entering static pressure for the critical terminal unit is not less than the sum of the terminal-unit manufacturer's recommended minimum inlet static pressure plus the static pressure needed to overcome terminal-unit discharge system losses.
4. Calibrate and balance each terminal unit for maximum and minimum design airflow as follows:

a. Adjust controls so that terminal is calling for maximum airflow. Some controllers require starting with minimum airflow. Verify calibration procedure for specific project.
b. Measure airflow and adjust calibration factor as required for design maximum airflow. Record calibration factor.
c. When maximum airflow is correct, balance the air outlets downstream from terminal units.
d. Adjust controls so that terminal is calling for minimum airflow.
e. Measure airflow and adjust calibration factor as required for design minimum airflow. Record calibration factor. If no minimum calibration is available, note any deviation from design airflow.
f. When in full cooling or full heating, ensure that there is no mixing of hot-deck and cold-deck airstreams unless so designed.
g. On constant volume terminals, in critical areas where room pressure is to be maintained, verify that the airflow remains constant over the full range of full cooling to full heating. Note any deviation from design airflow or room pressure.

5. After terminals have been calibrated and balanced, test and adjust system for total airflow. Adjust fans to deliver total design airflows within the maximum allowable fan speed listed by fan manufacturer.

a. Set outside-air, return-air, and relief-air dampers for proper position that simulates minimum outdoor-air conditions.
b. Set terminals for maximum airflow. If system design includes diversity, adjust terminals for maximum and minimum airflow so that connected total matches fan selection and simulates actual load in the building.
c. Where duct conditions allow, measure airflow by Pitot-tube traverse. If necessary, perform multiple Pitot-tube traverses to obtain total airflow.
d. Where duct conditions are not suitable for Pitot-tube traverse measurements, a coil traverse may be acceptable.
e. If a reliable Pitot-tube traverse or coil traverse is not possible, measure airflow at terminals and calculate the total airflow.

6. Measure fan static pressures as follows:

a. Measure static pressure directly at the fan outlet or through the flexible connection.
b. Measure static pressure directly at the fan inlet or through the flexible connection.
c. Measure static pressure across each component that makes up the air-handling system.
d. Report any artificial loading of filters at the time static pressures are measured.

7. Set final return and outside airflow to the fan while operating at maximum return airflow and minimum outdoor airflow.

a. Balance the return-air ducts and inlets the same as described for constant-volume air systems.
b. Verify that terminal units are meeting design airflow under system maximum flow.

8. Re-measure the inlet static pressure at the most critical terminal unit and adjust the system static pressure set point to the most energy-efficient set point to maintain the optimum system static pressure. Record set point and give to controls contractor.
9. Verify final system conditions as follows:

a. Re-measure and confirm that minimum outdoor, return, and relief airflows are within design. Readjust to match design if necessary.
b. Re-measure and confirm that total airflow is within design.

c. Re-measure final fan operating data, rpms, volts, amps, and static profile.
d. Mark final settings.
e. Test system in economizer mode. Verify proper operation and adjust if necessary. Measure and record all operating data.
f. Verify tracking between supply and return fans.

3.7 PROCEDURES FOR INDUCTION-UNIT SYSTEMS

A. Balance primary-air risers by measuring static pressure at the nozzles of the top and bottom units of each riser to determine which risers must be throttled. Adjust risers to indicated airflow within specified tolerances.

B. Adjust each induction unit.

C. Adjust fans to deliver total indicated airflows within the maximum allowable fan speed listed by fan manufacturer.

1. Measure total airflow.

   a. Set outside-air, return-air, and relief-air dampers for proper position that simulates minimum outdoor-air conditions.
   b. Where duct conditions allow, measure airflow by Pitot-tube traverse. If necessary, perform multiple Pitot-tube traverses to obtain total airflow.
   c. Where duct conditions are not suitable for Pitot-tube traverse measurements, a coil traverse may be acceptable.
   d. If a reliable Pitot-tube traverse or coil traverse is not possible, measure airflow at terminals and calculate the total airflow.

2. Measure fan static pressures as follows:

   a. Measure static pressure directly at the fan outlet or through the flexible connection.
   b. Measure static pressure directly at the fan inlet or through the flexible connection.
   c. Measure static pressure across each component that makes up the air-handling system.
   d. Report artificial loading of filters at the time static pressures are measured.

3. Obtain approval from Architect or commissioning authority for adjustment of fan speed higher or lower than indicated speed. Comply with requirements in HVAC Sections for air-handling units for adjustment of fans, belts, and pulley sizes to achieve indicated air-handling-unit performance.
4. Do not make fan-speed adjustments that result in motor overload. Consult equipment manufacturers about fan-speed safety factors. Modulate dampers and measure fan-motor amperage to ensure that no overload occurs. Measure amperage in full-cooling, full-heating, economizer, and any other operating mode to determine the maximum required brake horsepower.

D. Adjust volume dampers for main duct, submain ducts, and major branch ducts to indicated airflows.

1. Measure airflow of submain and branch ducts.
2. Adjust submain and branch duct volume dampers for specified airflow.
3. Re-measure each submain and branch duct after all have been adjusted.

E. Balance airflow to each induction unit by measuring the nozzle pressure and comparing it to the manufacturer's published data for nozzle pressure versus cfm. Adjust the unit's inlet damper to achieve the required nozzle pressure for design cfm.

F. Verify final system conditions.

1. Re-measure and confirm that minimum outdoor, return, and relief airflows are within design. Readjust to match design if necessary.
2. Re-measure and confirm that total airflow is within design.
3. Re-measure all final fan operating data, rpms, volts, amps, and static profile.
4. Mark all final settings.
5. Test system in economizer mode. Verify proper operation and adjust if necessary.
6. Measure and record all operating data.
7. Record final fan-performance data.

3.8 GENERAL PROCEDURES FOR HYDRONIC SYSTEMS

A. Prepare test reports for pumps, coils, and heat exchangers. Obtain approved submittals and manufacturer-recommended testing procedures. Crosscheck the summation of required coil and heat exchanger flow rates with pump design flow rate.

B. Prepare schematic diagrams of systems' "as-built" piping layouts.

C. In addition to requirements in "Preparation" Article, prepare hydronic systems for testing and balancing as follows:

1. Check liquid level in expansion tank.
2. Check highest vent for adequate pressure.
3. Check flow-control valves for proper position.
4. Locate start-stop and disconnect switches, electrical interlocks, and motor starters.
5. Verify that motor starters are equipped with properly sized thermal protection.
6. Check that air has been purged from the system.

3.9 PROCEDURES FOR CONSTANT-FLOW HYDRONIC SYSTEMS

A. Adjust pumps to deliver total design gpm.

1. Measure total water flow.

a. Position valves for full flow through coils.
b. Measure flow by main flow meter, if installed.
c. If main flow meter is not installed, determine flow by pump TDH or exchanger pressure drop.

2. Measure pump TDH as follows:

a. Measure discharge pressure directly at the pump outlet flange or in discharge pipe prior to any valves.
b. Measure inlet pressure directly at the pump inlet flange or in suction pipe prior to any valves or strainers.
c. Convert pressure to head and correct for differences in gage heights.

d. Verify pump impeller size by measuring the TDH with the discharge valve closed. Note the point on manufacturer's pump curve at zero flow and verify that the pump has the intended impeller size.
e. With valves open, read pump TDH. Adjust pump discharge valve until design water flow is achieved.

3. Monitor motor performance during procedures and do not operate motor in an overloaded condition.

B. Adjust flow-measuring devices installed in mains and branches to design water flows.

1. Measure flow in main and branch pipes.
2. Adjust main and branch balance valves for design flow.
3. Re-measure each main and branch after all have been adjusted.

C. Adjust flow-measuring devices installed at terminals for each space to design water flows.

1. Measure flow at terminals.
2. Adjust each terminal to design flow.
3. Re-measure each terminal after it is adjusted.
4. Position control valves to bypass the coil and adjust the bypass valve to maintain design flow.
5. Perform temperature tests after flows have been balanced.

D. For systems with pressure-independent valves at terminals:

1. Measure differential pressure and verify that it is within manufacturer's specified range.
2. Perform temperature tests after flows have been verified.

E. For systems without pressure-independent valves or flow-measuring devices at terminals:

1. Measure and balance coils by either coil pressure drop or temperature method.
2. If balanced by coil pressure drop, perform temperature tests after flows have been verified.

F. Verify final system conditions as follows:

1. Re-measure and confirm that total water flow is within design.
2. Re-measure final pumps' operating data, TDH, volts, amps, and static profile.
3. Mark final settings.

G. Verify that memory stops have been set.

3.10 PROCEDURES FOR VARIABLE-FLOW HYDRONIC SYSTEMS

A. Balance systems with automatic two- and three-way control valves by setting systems at maximum flow through heat-exchange terminals and proceed as specified above for hydronic systems.

B. Adjust the variable-flow hydronic system as follows:

1. Verify that the differential-pressure sensor is located as indicated.
2. Determine whether there is diversity in the system.

C. For systems with no diversity:

1. Adjust pumps to deliver total design gpm.

   a. Measure total water flow.

      1) Position valves for full flow through coils.
      2) Measure flow by main flow meter, if installed.
      3) If main flow meter is not installed, determine flow by pump TDH or exchanger pressure drop.

   b. Measure pump TDH as follows:

      1) Measure discharge pressure directly at the pump outlet flange or in discharge pipe prior to any valves.
      2) Measure inlet pressure directly at the pump inlet flange or in suction pipe prior to any valves or strainers.
      3) Convert pressure to head and correct for differences in gage heights.
      4) Verify pump impeller size by measuring the TDH with the discharge valve closed. Note the point on manufacturer's pump curve at zero flow and verify that the pump has the intended impeller size.
      5) With valves open, read pump TDH. Adjust pump discharge valve until design water flow is achieved.

   c. Monitor motor performance during procedures and do not operate motor in an overloaded condition.

2. Adjust flow-measuring devices installed in mains and branches to design water flows.

   a. Measure flow in main and branch pipes.
   b. Adjust main and branch balance valves for design flow.
   c. Re-measure each main and branch after all have been adjusted.

3. Adjust flow-measuring devices installed at terminals for each space to design water flows.

   a. Measure flow at terminals.
   b. Adjust each terminal to design flow.
   c. Re-measure each terminal after it is adjusted.
   d. Position control valves to bypass the coil and adjust the bypass valve to maintain design flow.
   e. Perform temperature tests after flows have been balanced.

4. For systems with pressure-independent valves at terminals:

   a. Measure differential pressure and verify that it is within manufacturer's specified range.
   b. Perform temperature tests after flows have been verified.

5. For systems without pressure-independent valves or flow-measuring devices at terminals:

   a. Measure and balance coils by either coil pressure drop or temperature method.
   b. If balanced by coil pressure drop, perform temperature tests after flows have been verified.

6. Prior to verifying final system conditions, determine the system differential-pressure set point.
7. If the pump discharge valve was used to set total system flow with variable-frequency controller at 60 Hz, at completion open discharge valve 100 percent and allow variable-frequency controller to control system differential-pressure set point. Record pump data under both conditions.
8. Mark final settings and verify that all memory stops have been set.
9. Verify final system conditions as follows:

    a. Re-measure and confirm that total water flow is within design.
    b. Re-measure final pumps' operating data, TDH, volts, amps, and static profile.
    c. Mark final settings.

10. Verify that memory stops have been set.

D. For systems with diversity:

1. Determine diversity factor.
2. Simulate system diversity by closing required number of control valves, as approved by the design engineer.
3. Adjust pumps to deliver total design gpm.

    a. Measure total water flow.

        1) Position valves for full flow through coils.
        2) Measure flow by main flow meter, if installed.
        3) If main flow meter is not installed, determine flow by pump TDH or exchanger pressure drop.

    b. Measure pump TDH as follows:

        1) Measure discharge pressure directly at the pump outlet flange or in discharge pipe prior to any valves.
        2) Measure inlet pressure directly at the pump inlet flange or in suction pipe prior to any valves or strainers.
        3) Convert pressure to head and correct for differences in gage heights.
        4) Verify pump impeller size by measuring the TDH with the discharge valve closed. Note the point on manufacturer's pump curve at zero flow and verify that the pump has the intended impeller size.
        5) With valves open, read pump TDH. Adjust pump discharge valve until design water flow is achieved.

    c. Monitor motor performance during procedures and do not operate motor in an overloaded condition.

4. Adjust flow-measuring devices installed in mains and branches to design water flows.

    a. Measure flow in main and branch pipes.
    b. Adjust main and branch balance valves for design flow.
    c. Re-measure each main and branch after all have been adjusted.

5. Adjust flow-measuring devices installed at terminals for each space to design water flows.

    a. Measure flow at terminals.

b. Adjust each terminal to design flow.
c. Re-measure each terminal after it is adjusted.
d. Position control valves to bypass the coil and adjust the bypass valve to maintain design flow.
e. Perform temperature tests after flows have been balanced.

6. For systems with pressure-independent valves at terminals:

a. Measure differential pressure and verify that it is within manufacturer's specified range.
b. Perform temperature tests after flows have been verified.

7. For systems without pressure-independent valves or flow-measuring devices at terminals:

a. Measure and balance coils by either coil pressure drop or temperature method.
b. If balanced by coil pressure drop, perform temperature tests after flows have been verified.

8. Open control valves that were shut. Close a sufficient number of control valves that were previously open to maintain diversity, and balance terminals that were just opened.
9. Prior to verifying final system conditions, determine system differential-pressure set point.
10. If the pump discharge valve was used to set total system flow with variable-frequency controller at 60 Hz, at completion open discharge valve 100 percent and allow variable-frequency controller to control system differential-pressure set point. Record pump data under both conditions.
11. Mark final settings and verify that memory stops have been set.
12. Verify final system conditions as follows:

a. Re-measure and confirm that total water flow is within design.
b. Re-measure final pumps' operating data, TDH, volts, amps, and static profile.
c. Mark final settings.

13. Verify that memory stops have been set.

3.11 PROCEDURES FOR PRIMARY-SECONDARY HYDRONIC SYSTEMS

A. Balance the primary circuit flow first.

B. Balance the secondary circuits after the primary circuits are complete.

C. Adjust pumps to deliver total design gpm.

1. Measure total water flow.

a. Position valves for full flow through coils.
b. Measure flow by main flow meter, if installed.
c. If main flow meter is not installed, determine flow by pump TDH or exchanger pressure drop.

2. Measure pump TDH as follows:

a. Measure discharge pressure directly at the pump outlet flange or in discharge pipe prior to any valves.

b. Measure inlet pressure directly at the pump inlet flange or in suction pipe prior to any valves or strainers.
c. Convert pressure to head and correct for differences in gage heights.
d. Verify pump impeller size by measuring the TDH with the discharge valve closed. Note the point on manufacturer's pump curve at zero flow and verify that the pump has the intended impeller size.
e. With valves open, read pump TDH. Adjust pump discharge valve until design water flow is achieved.

3. Monitor motor performance during procedures and do not operate motor in an overloaded condition.

D. Adjust flow-measuring devices installed in mains and branches to design water flows.

1. Measure flow in main and branch pipes.
2. Adjust main and branch balance valves for design flow.
3. Re-measure each main and branch after all have been adjusted.

E. Adjust flow-measuring devices installed at terminals for each space to design water flows.

1. Measure flow at terminals.
2. Adjust each terminal to design flow.
3. Re-measure each terminal after it is adjusted.
4. Position control valves to bypass the coil and adjust the bypass valve to maintain design flow.
5. Perform temperature tests after flows have been balanced.

F. For systems with pressure-independent valves at terminals:

1. Measure differential pressure and verify that it is within manufacturer's specified range.
2. Perform temperature tests after flows have been verified.

G. For systems without pressure-independent valves or flow-measuring devices at terminals:

1. Measure and balance coils by either coil pressure drop or temperature method.
2. If balanced by coil pressure drop, perform temperature tests after flows have been verified.

H. Verify final system conditions as follows:

1. Re-measure and confirm that total water flow is within design.
2. Re-measure final pumps' operating data, TDH, volts, amps, and static profile.
3. Mark final settings.

I. Verify that memory stops have been set.

3.12 PROCEDURES FOR STEAM SYSTEMS

A. Measure and record upstream and downstream pressure of each piece of equipment.

B. Measure and record upstream and downstream steam pressure of pressure-reducing valves.

C. Check settings and operation of automatic temperature-control valves, self-contained control valves, and pressure-reducing valves. Record final settings.

D. Check settings and operation of each safety valve. Record settings.

E. Verify the operation of each steam trap.

3.13 PROCEDURES FOR HEAT EXCHANGERS

A. Adjust water flow to within specified tolerances.

B. Measure inlet and outlet water temperatures.

C. Measure inlet steam pressure.

D. Check settings and operation of safety and relief valves. Record settings.

3.14 PROCEDURES FOR MOTORS

A. Motors 1/2 HP and Larger: Test at final balanced conditions and record the following data:

1. Manufacturer's name, model number, and serial number.
2. Motor horsepower rating.
3. Motor rpm.
4. Phase and hertz.
5. Nameplate and measured voltage, each phase.
6. Nameplate and measured amperage, each phase.
7. Starter size and thermal-protection-element rating.
8. Service factor and frame size.

B. Motors Driven by Variable-Frequency Controllers: Test manual bypass of controller to prove proper operation.

3.15 PROCEDURES FOR CHILLERS

A. Balance water flow through each evaporator and condenser to within specified tolerances of indicated flow with all pumps operating. With only one chiller operating in a multiple chiller installation, do not exceed the flow for the maximum tube velocity recommended by the chiller manufacturer. Measure and record the following data with each chiller operating at design conditions:

1. Evaporator-water entering and leaving temperatures, pressure drop, and water flow.
2. For water-cooled chillers, condenser-water entering and leaving temperatures, pressure drop, and water flow.
3. Evaporator and condenser refrigerant temperatures and pressures, using instruments furnished by chiller manufacturer.
4. Power factor if factory-installed instrumentation is furnished for measuring kilowatts.
5. Kilowatt input if factory-installed instrumentation is furnished for measuring kilowatts.
6. Capacity: Calculate in tons of cooling.
7. For air-cooled chillers, verify condenser-fan rotation and record fan and motor data including number of fans and entering- and leaving-air temperatures.

3.16 PROCEDURES FOR COOLING TOWERS

A. Balance total condenser-water flows to towers. Measure and record the following data:

1. Condenser-water flow to each cell of the cooling tower.
2. Entering- and leaving-water temperatures.
3. Wet- and dry-bulb temperatures of entering air.
4. Wet- and dry-bulb temperatures of leaving air.
5. Condenser-water flow rate recirculating through the cooling tower.
6. Cooling-tower spray pump discharge pressure.
7. Condenser-water flow through bypass.
8. Fan and motor operating data.

3.17 PROCEDURES FOR CONDENSING UNITS

A. Verify proper rotation of fans.

B. Measure entering- and leaving-air temperatures.

C. Record fan and motor operating data.

3.18 PROCEDURES FOR BOILERS

A. Hydronic Boilers:

1. Measure and record entering- and leaving-water temperatures.
2. Measure and record water flow.
3. Record relief valve pressure setting.

B. Steam Boilers:

1. Measure and record entering-water temperature.
2. Measure and record feed water flow.
3. Measure and record leaving-steam pressure and temperature.
4. Record relief valve pressure setting.

3.19 PROCEDURES FOR HEAT-TRANSFER COILS

A. Measure, adjust, and record the following data for each water coil:

1. Entering- and leaving-water temperature.
2. Water flow rate.
3. Water pressure drop for major (more than 20 gpm) equipment coils, excluding unitary equipment such as reheat coils, unit heaters, and fan-coil units.
4. Dry-bulb temperature of entering and leaving air.
5. Wet-bulb temperature of entering and leaving air for cooling coils.
6. Airflow.

B. Measure, adjust, and record the following data for each electric heating coil:

1. Nameplate data.
2. Airflow.

3. Entering- and leaving-air temperature at full load.
4. Voltage and amperage input of each phase at full load.
5. Calculated kilowatt at full load.
6. Fuse or circuit-breaker rating for overload protection.

C. Measure, adjust, and record the following data for each steam coil:

1. Dry-bulb temperature of entering and leaving air.
2. Airflow.
3. Inlet steam pressure.

D. Measure, adjust, and record the following data for each refrigerant coil:

1. Dry-bulb temperature of entering and leaving air.
2. Wet-bulb temperature of entering and leaving air.
3. Airflow.

3.20 SOUND TESTS

A. After the systems are balanced and construction is Substantially Complete, measure and record sound levels at 5 locations as designated by the Architect.

B. Instrumentation:

1. The sound-testing meter shall be a portable, general-purpose testing meter consisting of a microphone, processing unit, and readout.
2. The sound-testing meter shall be capable of showing fluctuations at minimum and maximum levels and measuring the equivalent continuous sound pressure level (LEQ).
3. The sound-testing meter must be capable of using 1/3 octave band filters to measure mid-frequencies from 31.5 Hz to 8000 Hz.
4. The accuracy of the sound-testing meter shall be plus or minus one decibel.

C. Test Procedures:

1. Perform test at quietest background noise period. Note cause of unpreventable sound that affects test outcome.
2. Equipment should be operating at design values.
3. Calibrate the sound-testing meter prior to taking measurements.
4. Use a microphone suitable for the type of noise levels measured that is compatible with meter. Provide a windshield for outside or in-duct measurements.
5. Record a set of background measurements in dBA and sound pressure levels in the eight un-weighted octave bands 63 Hz to 8000 Hz (NC) with the equipment off.
6. Take sound readings in dBA and sound pressure levels in the eight un-weighted octave bands 63 Hz to 8000 Hz (NC) with the equipment operating.
7. Take readings no closer than 36 inches from a wall or from the operating equipment and approximately 60 inches from the floor, with the meter held or mounted on a tripod.
8. For outdoor measurements, move sound-testing meter slowly and scan area that has the most exposure to noise source being tested. Use A-weighted scale for this type of reading.

D. Reporting:

1. Report shall record the following:

a. Location.
b. System tested.
c. dBA reading.
d. Sound pressure level in each octave band with equipment on and off.

2. Plot sound pressure levels on NC worksheet with equipment on and off.

3.21 VIBRATION TESTS

A. After systems are balanced and construction is Substantially Complete, measure and record vibration levels on equipment having motor horsepower equal to or greater than 15.

B. Instrumentation:

1. Use portable, battery-operated, and microprocessor-controlled vibration meter with or without a built-in printer.
2. The meter shall automatically identify engineering units, filter bandwidth, amplitude, and frequency scale values.
3. The meter shall be able to measure machine vibration displacement in mils of deflection, velocity in inches per second, and acceleration in inches per second squared.
4. Verify calibration date is current for vibration meter before taking readings.

C. Test Procedures:

1. To ensure accurate readings, verify that accelerometer has a clean, flat surface and is mounted properly.
2. With the unit running, set up vibration meter in a safe, secure location. Connect transducer to meter with proper cables. Hold magnetic tip of transducer on top of the bearing, and measure unit in mils of deflection. Record measurement, then move transducer to the side of the bearing and record in mils of deflection. Record an axial reading in mils of deflection by holding nonmagnetic, pointed transducer tip on end of shaft.
3. Change vibration meter to velocity (inches per second) measurements. Repeat and record above measurements.
4. Record CPM or rpm.
5. Read each bearing on motor, fan, and pump as required. Track and record vibration levels from rotating component through casing to base.

D. Reporting:

1. Report shall record location and the system tested.
2. Include horizontal-vertical-axial measurements for tests.
3. Verify that vibration limits follow Specifications, or, if not specified, follow the General Machinery Vibration Severity Chart or Vibration Acceleration General Severity Chart from the AABC National Standards. Acceptable levels of vibration are normally "smooth" to "good."
4. Include in report General Machinery Vibration Severity Chart, with conditions plotted.

3.22 DUCT LEAKAGE TESTS

A. Witness the duct pressure testing performed by Installer.

B. Verify that proper test methods are used and that leakage rates are within specified tolerances.

C. Report deficiencies observed.

3.23 CONTROLS VERIFICATION

A. In conjunction with system balancing, perform the following:

1. Verify temperature control system is operating within the design limitations.
2. Confirm that the sequences of operation are in compliance with Contract Documents.
3. Verify that controllers are calibrated and function as intended.
4. Verify that controller set points are as indicated.
5. Verify the operation of lockout or interlock systems.
6. Verify the operation of valve and damper actuators.
7. Verify that controlled devices are properly installed and connected to correct controller.
8. Verify that controlled devices travel freely and are in position indicated by controller: open, closed, or modulating.
9. Verify location and installation of sensors to ensure that they sense only intended temperature, humidity, or pressure.

B. Reporting: Include a summary of verifications performed, remaining deficiencies, and variations from indicated conditions.

3.24 PROCEDURES FOR TESTING, ADJUSTING, AND BALANCING EXISTING SYSTEMS

A. Perform a preconstruction inspection of existing equipment that is to remain and be reused.

1. Measure and record the operating speed, airflow, and static pressure of each fan.
2. Measure motor voltage and amperage. Compare the values to motor nameplate information.
3. Check the refrigerant charge.
4. Check the condition of filters.
5. Check the condition of coils.
6. Check the operation of the drain pan and condensate-drain trap.
7. Check bearings and other lubricated parts for proper lubrication.
8. Report on the operating condition of the equipment and the results of the measurements taken. Report deficiencies.

B. Before performing testing and balancing of existing systems, inspect existing equipment that is to remain and be reused to verify that existing equipment has been cleaned and refurbished. Verify the following:

1. New filters are installed.
2. Coils are clean and fins combed.
3. Drain pans are clean.
4. Fans are clean.
5. Bearings and other parts are properly lubricated.
6. Deficiencies noted in the preconstruction report are corrected.

C. Perform testing and balancing of existing systems to the extent that existing systems are affected by the renovation work.

1. Compare the indicated airflow of the renovated work to the measured fan airflows and determine the new fan speed and the face velocity of filters and coils.

2. Verify that the indicated airflows of the renovated work result in filter and coil face velocities and fan speeds that are within the acceptable limits defined by equipment manufacturer.
3. If calculations increase or decrease the airflow rates and water flow rates by more than 5 percent, make equipment adjustments to achieve the calculated rates. If increase or decrease is 5 percent or less, equipment adjustments are not required.
4. Balance each air outlet.

3.25 TOLERANCES

A. Set HVAC system's airflow rates and water flow rates within the following tolerances:

1. Supply, Return, and Exhaust Fans and Equipment with Fans: Plus 10 percent.
2. Air Outlets and Inlets: Plus or minus 10 percent.
3. Heating-Water Flow Rate: Plus or minus 10 percent.
4. Cooling-Water Flow Rate: Plus or minus 10 percent.

B. Maintaining pressure relationships as designed shall have priority over the tolerances specified above.

3.26 PROGRESS REPORTING

A. Initial Construction-Phase Report: Based on examination of the Contract Documents as specified in "Examination" Article, prepare a report on the adequacy of design for systems balancing devices. Recommend changes and additions to systems balancing devices to facilitate proper performance measuring and balancing. Recommend changes and additions to HVAC systems and general construction to allow access for performance measuring and balancing devices.

B. Status Reports: Prepare weekly progress reports to describe completed procedures, procedures in progress, and scheduled procedures. Include a list of deficiencies and problems found in systems being tested and balanced. Prepare a separate report for each system and each building floor for systems serving multiple floors.

3.27 FINAL REPORT

A. General: Prepare a certified written report; tabulate and divide the report into separate sections for tested systems and balanced systems.

1. Include a certification sheet at the front of the report's binder, signed and sealed by the certified testing and balancing engineer.
2. Include a list of instruments used for procedures, along with proof of calibration.
3. Certify validity and accuracy of field data.

B. Final Report Contents: In addition to certified field-report data, include the following:

1. Pump curves.
2. Fan curves.
3. Manufacturers' test data.
4. Field test reports prepared by system and equipment installers.
5. Other information relative to equipment performance; do not include Shop Drawings and Product Data.

C. General Report Data: In addition to form titles and entries, include the following data:

1. Title page.
2. Name and address of the TAB specialist.
3. Project name.
4. Project location.
5. Architect's name and address.
6. Engineer's name and address.
7. Contractor's name and address.
8. Report date.
9. Signature of TAB supervisor who certifies the report.
10. Table of Contents with the total number of pages defined for each section of the report. Number each page in the report.
11. Summary of contents including the following:

    a. Indicated versus final performance.
    b. Notable characteristics of systems.
    c. Description of system operation sequence if it varies from the Contract Documents.

12. Nomenclature sheets for each item of equipment.
13. Data for terminal units, including manufacturer's name, type, size, and fittings.
14. Notes to explain why certain final data in the body of reports vary from indicated values.
15. Test conditions for fans and pump performance forms including the following:

    a. Settings for outdoor-, return-, and exhaust-air dampers.
    b. Conditions of filters.
    c. Cooling coil, wet- and dry-bulb conditions.
    d. Face and bypass damper settings at coils.
    e. Fan drive settings including settings and percentage of maximum pitch diameter.
    f. Inlet vane settings for variable-air-volume systems.
    g. Settings for supply-air, static-pressure controller.
    h. Other system operating conditions that affect performance.

D. System Diagrams: Include schematic layouts of air and hydronic distribution systems. Present each system with single-line diagram and include the following:

1. Quantities of outdoor, supply, return, and exhaust airflows.
2. Water and steam flow rates.
3. Duct, outlet, and inlet sizes.
4. Pipe and valve sizes and locations.
5. Terminal units.
6. Balancing stations.
7. Position of balancing devices.

E. Air-Handling-Unit Test Reports: For air-handling units with coils, include the following:

1. Unit Data:

    a. Unit identification.
    b. Location.
    c. Make and type.
    d. Model number and unit size.
    e. Manufacturer's serial number.
    f. Unit arrangement and class.

g. Discharge arrangement.
h. Sheave make, size in inches, and bore.
i. Center-to-center dimensions of sheave and amount of adjustments in inches.
j. Number, make, and size of belts.
k. Number, type, and size of filters.

2. Motor Data:

a. Motor make, and frame type and size.
b. Horsepower and rpm.
c. Volts, phase, and hertz.
d. Full-load amperage and service factor.
e. Sheave make, size in inches, and bore.
f. Center-to-center dimensions of sheave and amount of adjustments in inches.

3. Test Data (Indicated and Actual Values):

a. Total airflow rate in cfm.
b. Total system static pressure in inches wg.
c. Fan rpm.
d. Discharge static pressure in inches wg.
e. Filter static-pressure differential in inches wg.
f. Preheat-coil static-pressure differential in inches wg.
g. Cooling-coil static-pressure differential in inches wg.
h. Heating-coil static-pressure differential in inches wg.
i. Outdoor airflow in cfm.
j. Return airflow in cfm.
k. Outdoor-air damper position.
l. Return-air damper position.
m. Vortex damper position.

F. Apparatus-Coil Test Reports:

1. Coil Data:

a. System identification.
b. Location.
c. Coil type.
d. Number of rows.
e. Fin spacing in fins per inch o.c.
f. Make and model number.
g. Face area in sq. ft..
h. Tube size in NPS.
i. Tube and fin materials.
j. Circuiting arrangement.

2. Test Data (Indicated and Actual Values):

a. Airflow rate in cfm.
b. Average face velocity in fpm.
c. Air pressure drop in inches wg.
d. Outdoor-air, wet- and dry-bulb temperatures in deg F.
e. Return-air, wet- and dry-bulb temperatures in deg F.
f. Entering-air, wet- and dry-bulb temperatures in deg F.
g. Leaving-air, wet- and dry-bulb temperatures in deg F.

h. Water flow rate in gpm.
i. Water pressure differential in feet of head or psig.
j. Entering-water temperature in deg F.
k. Leaving-water temperature in deg F.
l. Refrigerant expansion valve and refrigerant types.
m. Refrigerant suction pressure in psig.
n. Refrigerant suction temperature in deg F.
o. Inlet steam pressure in psig.

G. Gas- and Oil-Fired Heat Apparatus Test Reports: In addition to manufacturer's factory startup equipment reports, include the following:

1. Unit Data:

a. System identification.
b. Location.
c. Make and type.
d. Model number and unit size.
e. Manufacturer's serial number.
f. Fuel type in input data.
g. Output capacity in Btu/h.
h. Ignition type.
i. Burner-control types.
j. Motor horsepower and rpm.
k. Motor volts, phase, and hertz.
l. Motor full-load amperage and service factor.
m. Sheave make, size in inches, and bore.
n. Center-to-center dimensions of sheave and amount of adjustments in inches.

2. Test Data (Indicated and Actual Values):

a. Total airflow rate in cfm.
b. Entering-air temperature in deg F.
c. Leaving-air temperature in deg F.
d. Air temperature differential in deg F.
e. Entering-air static pressure in inches wg.
f. Leaving-air static pressure in inches wg.
g. Air static-pressure differential in inches wg.
h. Low-fire fuel input in Btu/h.
i. High-fire fuel input in Btu/h.
j. Manifold pressure in psig.
k. High-temperature-limit setting in deg F.
l. Operating set point in Btu/h.
m. Motor voltage at each connection.
n. Motor amperage for each phase.
o. Heating value of fuel in Btu/h.

H. Electric-Coil Test Reports: For electric furnaces, duct coils, and electric coils installed in central-station air-handling units, include the following:

1. Unit Data:

a. System identification.
b. Location.
c. Coil identification.
d. Capacity in Btu/h.

e. Number of stages.
f. Connected volts, phase, and hertz.
g. Rated amperage.
h. Airflow rate in cfm.
i. Face area in sq. ft..
j. Minimum face velocity in fpm.

2. Test Data (Indicated and Actual Values):

a. Heat output in Btu/h.
b. Airflow rate in cfm.
c. Air velocity in fpm.
d. Entering-air temperature in deg F.
e. Leaving-air temperature in deg F.
f. Voltage at each connection.
g. Amperage for each phase.

I. Fan Test Reports: For supply, return, and exhaust fans, include the following:

1. Fan Data:

a. System identification.
b. Location.
c. Make and type.
d. Model number and size.
e. Manufacturer's serial number.
f. Arrangement and class.
g. Sheave make, size in inches, and bore.
h. Center-to-center dimensions of sheave and amount of adjustments in inches.

2. Motor Data:

a. Motor make, and frame type and size.
b. Horsepower and rpm.
c. Volts, phase, and hertz.
d. Full-load amperage and service factor.
e. Sheave make, size in inches, and bore.
f. Center-to-center dimensions of sheave, and amount of adjustments in inches.
g. Number, make, and size of belts.

3. Test Data (Indicated and Actual Values):

a. Total airflow rate in cfm.
b. Total system static pressure in inches wg.
c. Fan rpm.
d. Discharge static pressure in inches wg.
e. Suction static pressure in inches wg.

J. Round, Flat-Oval, and Rectangular Duct Traverse Reports: Include a diagram with a grid representing the duct cross-section and record the following:

1. Report Data:

a. System and air-handling-unit number.
b. Location and zone.

c. Traverse air temperature in deg F.
d. Duct static pressure in inches wg.
e. Duct size in inches.
f. Duct area in sq. ft..
g. Indicated airflow rate in cfm.
h. Indicated velocity in fpm.
i. Actual airflow rate in cfm.
j. Actual average velocity in fpm.
k. Barometric pressure in psig.

K. Air-Terminal-Device Reports:

1. Unit Data:

a. System and air-handling unit identification.
b. Location and zone.
c. Apparatus used for test.
d. Area served.
e. Make.
f. Number from system diagram.
g. Type and model number.
h. Size.
i. Effective area in sq. ft..

2. Test Data (Indicated and Actual Values):

a. Airflow rate in cfm.
b. Air velocity in fpm.
c. Preliminary airflow rate as needed in cfm.
d. Preliminary velocity as needed in fpm.
e. Final airflow rate in cfm.
f. Final velocity in fpm.
g. Space temperature in deg F.

L. System-Coil Reports: For reheat coils and water coils of terminal units, include the following:

1. Unit Data:

a. System and air-handling-unit identification.
b. Location and zone.
c. Room or riser served.
d. Coil make and size.
e. Flowmeter type.

2. Test Data (Indicated and Actual Values):

a. Airflow rate in cfm.
b. Entering-water temperature in deg F.
c. Leaving-water temperature in deg F.
d. Water pressure drop in feet of head or psig.
e. Entering-air temperature in deg F.
f. Leaving-air temperature in deg F.

M. Pump Test Reports: Calculate impeller size by plotting the shutoff head on pump curves and include the following:

1. Unit Data:

    a. Unit identification.
    b. Location.
    c. Service.
    d. Make and size.
    e. Model number and serial number.
    f. Water flow rate in gpm.
    g. Water pressure differential in feet of head or psig.
    h. Required net positive suction head in feet of head or psig.
    i. Pump rpm.
    j. Impeller diameter in inches.
    k. Motor make and frame size.
    l. Motor horsepower and rpm.
    m. Voltage at each connection.
    n. Amperage for each phase.
    o. Full-load amperage and service factor.
    p. Seal type.

2. Test Data (Indicated and Actual Values):

    a. Static head in feet of head or psig.
    b. Pump shutoff pressure in feet of head or psig.
    c. Actual impeller size in inches.
    d. Full-open flow rate in gpm.
    e. Full-open pressure in feet of head or psig.
    f. Final discharge pressure in feet of head or psig.
    g. Final suction pressure in feet of head or psig.
    h. Final total pressure in feet of head or psig.
    i. Final water flow rate in gpm.
    j. Voltage at each connection.
    k. Amperage for each phase.

N. Instrument Calibration Reports:

1. Report Data:

    a. Instrument type and make.
    b. Serial number.
    c. Application.
    d. Dates of use.
    e. Dates of calibration.

3.28 VERIFICATION OF TAB REPORT

A. The TAB specialist's test and balance engineer shall conduct the inspection in the presence of Construction Manager or commissioning authority.

B. Architect or Commissioning authority shall randomly select measurements, documented in the final report, to be rechecked. Rechecking shall be limited to either 10 percent of the total measurements recorded or the extent of measurements that can be accomplished in a normal 8-hour business day.

C. If rechecks yield measurements that differ from the measurements documented in the final report by more than the tolerances allowed, the measurements shall be noted as "FAILED."

D. If the number of "FAILED" measurements is greater than 10 percent of the total measurements checked during the final inspection, the testing and balancing shall be considered incomplete and shall be rejected.

E. If TAB work fails, proceed as follows:

1. TAB specialists shall recheck all measurements and make adjustments. Revise the final report and balancing device settings to include all changes; resubmit the final report and request a second final inspection.
2. If the second final inspection also fails, Owner may contract the services of another TAB specialist to complete TAB work according to the Contract Documents and deduct the cost of the services from the original TAB specialist's final payment.
3. If the second verification also fails, Architect may contact AABC Headquarters regarding the AABC National Performance Guaranty.

F. Prepare test and inspection reports.

3.29 ADDITIONAL TESTS

A. Within 90 days of completing TAB, perform additional TAB to verify that balanced conditions are being maintained throughout and to correct unusual conditions.

B. Seasonal Periods: If initial TAB procedures were not performed during near-peak summer and winter conditions, perform additional TAB during near-peak summer and winter conditions.

END OF SECTION 23 05 93

SECTION 23 07 13 - DUCT INSULATION

PART 1 - GENERAL

1.1 SUMMARY

A. Section includes insulating the following duct services:

1. Indoor, concealed supply and outdoor air.
2. Indoor, exposed supply and outdoor air.
3. Indoor, concealed return located in unconditioned space.
4. Indoor, exposed return located in unconditioned space.
5. Indoor, concealed, Type I, commercial, kitchen hood exhaust.
6. Indoor, exposed, Type I, commercial, kitchen hood exhaust.
7. Indoor, concealed oven and warewash exhaust.
8. Indoor, exposed oven and warewash exhaust.
9. Indoor, concealed exhaust between isolation damper and penetration of building exterior.
10. Indoor, exposed exhaust between isolation damper and penetration of building exterior.
11. Outdoor, concealed supply and return.
12. Outdoor, exposed supply and return.

B. Related Sections:

1. Section 230716 "HVAC Equipment Insulation."
2. Section 230719 "HVAC Piping Insulation."
3. Section 233113 "Metal Ducts" for duct liners.

1.2 ACTION SUBMITTALS

A. Product Data: For each type of product indicated. Include thermal conductivity, water-vapor permeance thickness, and jackets (both factory- and field-applied if any).

B. Sustainable Design Submittals:

1. Product Data: For adhesives, indicating VOC content.
2. Laboratory Test Reports: For adhesives, indicating compliance with requirements for low-emitting materials.
3. Product Data: For coatings, indicating VOC content.
4. Laboratory Test Reports: For coatings, indicating compliance with requirements for low-emitting materials.
5. Product Data: For sealants, indicating VOC content.
6. Laboratory Test Reports: For sealants, indicating compliance with requirements for low-emitting materials.

C. Shop Drawings: Include plans, elevations, sections, details, and attachments to other work.

1. Detail application of protective shields, saddles, and inserts at hangers for each type of insulation and hanger.
2. Detail insulation application at elbows, fittings, dampers, specialties and flanges for each type of insulation.
3. Detail application of field-applied jackets.

4. Detail application at linkages of control devices.

D. Samples: For each type of insulation and jacket indicated. Identify each Sample, describing product and intended use. Sample sizes are as follows:

1. Sheet Form Insulation Materials: 12 inches square.
2. Sheet Jacket Materials: 12 inches square.
3. Manufacturer's Color Charts: For products where color is specified, show the full range of colors available for each type of finish material.

1.3 INFORMATIONAL SUBMITTALS

A. Qualification Data: For qualified Installer.

B. Material Test Reports: From a qualified testing agency acceptable to authorities having jurisdiction indicating, interpreting, and certifying test results for compliance of insulation materials, sealers, attachments, cements, and jackets, with requirements indicated. Include dates of tests and test methods employed.

C. Field quality-control reports.

1.4 QUALITY ASSURANCE

A. Installer Qualifications: Skilled mechanics who have successfully completed an apprenticeship program or craft training program, certified by the Department of Labor, Bureau of Apprenticeship and Training.

B. Mockups: Before installing insulation, build mockups for each type of insulation and finish listed below to demonstrate quality of insulation application and finishes. Build mockups in the location indicated or, if not indicated, as directed by Architect. Use materials indicated for the completed Work.

1. Ductwork Mockups:

a. One 10-foot section each of rectangular and round straight duct.
b. One each of a 90-degree mitered round and rectangular elbow, and one each of a 90-degree radius round and rectangular elbow.
c. One rectangular branch takeoff and one round branch takeoff from a rectangular duct. One round tee fitting.
d. One rectangular and round transition fitting.
e. Four support hangers for round and rectangular ductwork.
f. Each type of damper and specialty.

2. For each mockup, fabricate cutaway sections to allow observation of application details for insulation materials, adhesives, mastics, attachments, and jackets.
3. Notify Architect seven days in advance of dates and times when mockups will be constructed.
4. Obtain Architect's approval of mockups before starting insulation application.
5. Approval of mockups does not constitute approval of deviations from the Contract Documents contained in mockups unless Architect specifically approves such deviations in writing.
6. Maintain mockups during construction in an undisturbed condition as a standard for judging the completed Work.

7. Demolish and remove mockups when directed.

1.5 DELIVERY, STORAGE, AND HANDLING

A. Packaging: Insulation material containers are to be marked with the manufacturer's name, appropriate ASTM standard designation, type and grade, and maximum use temperature.

1.6 COORDINATION

A. Coordinate sizes and locations of supports, hangers, and insulation shields specified in Section 230529 "Hangers and Supports for HVAC Piping and Equipment."

B. Coordinate clearance requirements with duct Installer for duct insulation application. Before preparing ductwork Shop Drawings, establish and maintain clearance requirements for installation of insulation and field-applied jackets and finishes and for space required for maintenance.

C. Coordinate installation and testing of heat tracing.

1.7 SCHEDULING

A. Schedule insulation application after pressure testing systems and, where required, after installing and testing heat tracing. Insulation application may begin on segments that have satisfactory test results.

PART 2 - PRODUCTS

2.1 PERFORMANCE REQUIREMENTS

A. Surface-Burning Characteristics: For insulation and related materials, as determined by testing identical products in accordance with ASTM E84, by a testing agency acceptable to authorities having jurisdiction. Factory label insulation, jacket materials, adhesive, mastic, tapes, and cement material containers with appropriate markings of applicable testing agency.

1. All Insulation Installed Indoors and Outdoors: Flame-spread index of 25 or less, and smoke-developed index of 50 or less.

2.2 INSULATION MATERIALS

A. Comply with requirements in "Duct Insulation Schedule, General," "Indoor Duct and Plenum Insulation Schedule," and "Aboveground, Outdoor Duct and Plenum Insulation Schedule" articles for where insulating materials are to be applied.

B. Products do not contain asbestos, lead, mercury, or mercury compounds.

C. Products that come in contact with stainless steel have a leachable chloride content of less than 50 ppm when tested in accordance with ASTM C871.

D. Insulation materials for use on austenitic stainless steel are qualified as acceptable in accordance with ASTM C795.

E. Foam insulation materials do not use CFC or HCFC blowing agents in the manufacturing process.

F. Flexible Elastomeric: Closed-cell or expanded-rubber materials; suitable for maximum use temperature between minus 70 deg F and 220 deg F. Comply with ASTM C534, Type II for sheet materials.

1. Manufacturers: Subject to compliance with requirements, provide products by one of the following:

a. Aeroflex USA.
b. Armacell LLC.
c. K-Flex USA.

G. Glass-Fiber Blanket: Glass fibers bonded with a thermosetting resin; suitable for maximum use temperature up to 450 deg F in accordance with ASTM C411. Comply with ASTM C553, Type II, and ASTM C1290, Type III with factory-applied FSK jacket. Factory-applied jacket requirements are specified in "Factory-Applied Jackets" Article.

1. Manufacturers: Subject to compliance with requirements, provide products by one of the following:

a. CertainTeed Corporation; Saint-Gobain North America.
b. Johns Manville; a Berkshire Hathaway company.
c. Knauf Insulation.
d. Owens Corning.

H. High-Temperature, Glass-Fiber Blanket: Glass fibers bonded with a thermosetting resin, unfaced; suitable for maximum use temperature up to 1000 deg F. Comply with ASTM C553, Type V.

1. Manufacturers: Subject to compliance with requirements, provide products by one of the following:

a. CertainTeed Corporation; Saint-Gobain North America.
b. Johns Manville; a Berkshire Hathaway company.
c. Knauf Insulation.
d. Owens Corning.

I. Mineral Wool Blanket: Basalt volcanic rock-derived fibers bonded with a thermosetting resin, unfaced; suitable for maximum use temperature up to 1200 deg F in accordance with ASTM C447. Comply with ASTM C553.

1. Manufacturers: Subject to compliance with requirements, provide products by one of the following:

a. Johns Manville; a Berkshire Hathaway company.
b. Owens Corning.
c. ROCKWOOL Technical Insulation.

J. Glass-Fiber Board Insulation: Glass fibers bonded with a thermosetting resin; suitable for maximum use temperature between 35 deg F and 250 deg F for jacketed and between 35 deg F and 450 deg F for unfaced in accordance with ASTM C411. Comply with ASTM C612, Type IA

or Type IB. For duct and plenum applications, provide insulation with factory-applied ASJ. Factory-applied jacket requirements are specified in "Factory-Applied Jackets" Article.

1. Manufacturers: Subject to compliance with requirements, provide products by one of the following:

    a. CertainTeed Corporation; Saint-Gobain North America.
    b. Johns Manville; a Berkshire Hathaway company.
    c. Knauf Insulation.
    d. Owens Corning.

K. High-Temperature, Glass-Fiber Board: Glass fibers bonded with a thermosetting resin; suitable for maximum use temperature up to 1000 deg F in accordance with ASTM C411. Comply with ASTM C612, Type III, unfaced.

1. Manufacturers: Subject to compliance with requirements, provide products by one of the following:

    a. CertainTeed Corporation; Saint-Gobain North America.
    b. Johns Manville; a Berkshire Hathaway company.
    c. Knauf Insulation.
    d. Owens Corning.

L. Mineral Wool Board: Basalt volcanic rock-derived fibers bonded with a thermosetting resin; suitable for maximum use temperature up to 1100 deg F in accordance with ASTM C411. Comply with ASTM C612, Type III, unfaced.

1. Manufacturers: Subject to compliance with requirements, provide products by one of the following:

    a. Johns Manville; a Berkshire Hathaway company.
    b. Owens Corning.
    c. ROCKWOOL Technical Insulation.

M. Glass-Fiber, Pipe and Tank: Glass fibers bonded with a thermosetting resin; suitable for maximum use temperature between 35 deg F and 850 deg F, in accordance with ASTM C411. Comply with ASTM C1393.

1. Manufacturers: Subject to compliance with requirements, provide products by one of the following:

    a. CertainTeed Corporation; Saint-Gobain North America.
    b. Johns Manville; a Berkshire Hathaway company.
    c. Knauf Insulation.
    d. Owens Corning.

2. Semirigid board material with factory-applied ASJ jacket.
3. Factory-applied jacket requirements are specified in "Factory-Applied Jackets" Article.

N. Mineral Wool, Pipe and Tank: Mineral wool fibers bonded with a thermosetting resin; suitable for maximum use temperature up to 1000 deg F, in accordance with ASTM C411. Comply with ASTM C1393.

1. Manufacturers: Subject to compliance with requirements, provide products by one of the following:

a. Johns Manville; a Berkshire Hathaway company.
b. Owens Corning.
c. Rockwool International.

2. Semirigid board material with factory-applied ASJ jacket.
3. Factory-applied jacket requirements are specified in "Factory-Applied Jackets" Article.

2.3 FIRE-RATED INSULATION SYSTEMS

A. Fire-Rated Board: Structural-grade, press-molded, xonolite calcium silicate, fireproofing board suitable for operating temperatures up to 1700 deg F. Comply with ASTM C656, Type II, Grade 6. Tested and certified to provide a 2-hour fire rating by an NRTL acceptable to authorities having jurisdiction.

1. Manufacturers: Subject to compliance with requirements, provide products by the following:

a. Johns Manville; a Berkshire Hathaway company.

B. Fire-Rated Blanket: High-temperature, flexible, blanket insulation with FSK jacket that is tested and certified to provide a 2-hour fire rating by an NRTL acceptable to authorities having jurisdiction.

1. Manufacturers: Subject to compliance with requirements, provide products by one of the following:

a. 3M.
b. Thermal Ceramics.
c. Unifrax Corporation.

2.4 ADHESIVES

A. Materials are compatible with insulation materials, jackets, and substrates and for bonding insulation to itself and to surfaces to be insulated unless otherwise indicated.

B. Flexible Elastomeric and Polyolefin Adhesive: Comply with MIL-A-24179A, Type II, Class I.

1. Manufacturers: Subject to compliance with requirements, provide products by one of the following:

a. Aeroflex USA.
b. Armacell LLC.
c. Childers Brand; H. B. Fuller Construction Products.
d. Foster Brand; H. B. Fuller Construction Products.

2. Verify adhesives have a VOC content of [50] <Insert value> g/L or less.
3. Verify adhesive complies with the testing and product requirements of the California Department of Public Health's "Standard Method for the Testing and Evaluation of Volatile Organic Chemical Emissions from Indoor Sources Using Environmental Chambers."

C. Glass-Fiber and Mineral Wool Adhesive: Comply with MIL-A-3316C, Class 2, Grade A.

1. Manufacturers: Subject to compliance with requirements, provide products by one of the following:

a. Childers Brand; H. B. Fuller Construction Products.
b. Eagle Bridges - Marathon Industries.
c. Foster Brand; H. B. Fuller Construction Products.
d. Mon-Eco Industries, Inc.

2. Verify fiberglass adhesive has a VOC content of 80 g/L or less when calculated in accordance with 40 CFR 59, Subpart D (EPA Method 24).
3. Verify adhesive complies with the testing and product requirements of the California Department of Public Health's "Standard Method for the Testing and Evaluation of Volatile Organic Chemical Emissions from Indoor Sources Using Environmental Chambers."

D. ASJ Adhesive, and FSK Jacket Adhesive: Comply with MIL-A-3316C, Class 2, Grade A for bonding insulation jacket lap seams and joints.

1. Manufacturers: Subject to compliance with requirements, provide products by one of the following:

a. Childers Brand; H. B. Fuller Construction Products.
b. Eagle Bridges - Marathon Industries.
c. Foster Brand; H. B. Fuller Construction Products.
d. Mon-Eco Industries, Inc.

2. Verify adhesive has a VOC content of 80 g/L or less when calculated in accordance with 40 CFR 59, Subpart D (EPA Method 24).
3. Verify adhesive complies with the testing and product requirements of the California Department of Public Health's "Standard Method for the Testing and Evaluation of Volatile Organic Chemical Emissions from Indoor Sources Using Environmental Chambers."

2.5 MASTICS AND COATINGS

A. Materials are compatible with insulation materials, jackets, and substrates.

1. VOC Content: 300 g/L or less.
2. Low-Emitting Materials: Verify mastic coatings comply with the testing and product requirements of the California Department of Public Health's "Standard Method for the Testing and Evaluation of Volatile Organic Chemical Emissions from Indoor Sources Using Environmental Chambers."

B. Vapor-Retarder Mastic: Water based; suitable for indoor use on below ambient services.

1. Manufacturers: Subject to compliance with requirements, provide products by one of the following:

a. Childers Brand; H. B. Fuller Construction Products.
b. Foster Brand; H. B. Fuller Construction Products.
c. Knauf Insulation.

2. Water-Vapor Permeance: Comply with ASTM C755, Section 7.2.2, Table 2, for insulation type and service conditions.
3. Service Temperature Range: Minus 20 to plus 180 deg F.
4. Comply with MIL-PRF-19565C, Type II, for permeance requirements, with supplier listing on DOD QPD - Qualified Products Database.
5. Color: White.

C. Breather Mastic: Water based; suitable for indoor and outdoor use on above ambient services.

1. Manufacturers: Subject to compliance with requirements, provide products by one of the following:

   a. Childers Brand; H. B. Fuller Construction Products.
   b. Eagle Bridges - Marathon Industries.
   c. Foster Brand; H. B. Fuller Construction Products.
   d. Knauf Insulation.
   e. Mon-Eco Industries, Inc.

2. Water-Vapor Permeance: ASTM E96, greater than 1.0 perm at manufacturer's recommended dry film thickness.
3. Service Temperature Range: Minus 20 to plus 180 deg F.
4. Color: White.

2.6 LAGGING ADHESIVES

A. Description: Comply with MIL-A-3316C, Class I, Grade A and are compatible with insulation materials, jackets, and substrates.

1. Manufacturers: Subject to compliance with requirements, provide products by one of the following:

   a. Childers Brand; H. B. Fuller Construction Products.
   b. Foster Brand; H. B. Fuller Construction Products.

2. Verify adhesives have a VOC content of 50 g/L or less.
3. Verify adhesive complies with the testing and product requirements of the California Department of Public Health's "Standard Method for the Testing and Evaluation of Volatile Organic Chemical Emissions from Indoor Sources Using Environmental Chambers."
4. Fire-resistant, water-based lagging adhesive and coating for use indoors to adhere fire-resistant lagging cloths over duct insulation.
5. Service Temperature Range: 0 to plus 180 deg F.
6. Color: White.

2.7 SEALANTS

A. FSK and Metal Jacket Flashing Sealants:

1. Manufacturers: Subject to compliance with requirements, provide products by one of the following:

   a. Childers Brand; H. B. Fuller Construction Products.
   b. Eagle Bridges - Marathon Industries.
   c. Foster Brand; H. B. Fuller Construction Products.
   d. Mon-Eco Industries, Inc.

2. Materials are compatible with insulation materials, jackets, and substrates.
3. Fire- and water-resistant, flexible, elastomeric sealant.
4. Service Temperature Range: Minus 40 to plus 250 deg F.
5. Color: Aluminum.
6. Verify sealant has a VOC content of 420 g/L or less.

7. Verify sealant complies with the testing and product requirements of the California Department of Public Health's "Standard Method for the Testing and Evaluation of Volatile Organic Chemical Emissions from Indoor Sources Using Environmental Chambers."

B. ASJ Flashing Sealants, and Vinyl and PVC Jacket Flashing Sealants:

1. Manufacturers: Subject to compliance with requirements, provide products by one of the following:

   a. Childers Brand; H. B. Fuller Construction Products.
   b. Foster Brand; H. B. Fuller Construction Products.

2. Materials are compatible with insulation materials, jackets, and substrates.
3. Fire- and water-resistant, flexible, elastomeric sealant.
4. Service Temperature Range: Minus 40 to plus 250 deg F.
5. Color: White.
6. Verify sealant has a VOC content of 420 g/L or less.
7. Verify sealant complies with the testing and product requirements of the California Department of Public Health's "Standard Method for the Testing and Evaluation of Volatile Organic Chemical Emissions from Indoor Sources Using Environmental Chambers."

2.8 FACTORY-APPLIED JACKETS

A. Insulation system schedules indicate factory-applied jackets on various applications. When factory-applied jackets are indicated, comply with the following:

1. ASJ: White, kraft-paper, fiberglass-reinforced scrim with aluminum-foil backing; complying with ASTM C1136, Type I.
2. ASJ-SSL: ASJ with self-sealing, pressure-sensitive, acrylic-based adhesive covered by a removable protective strip; complying with ASTM C1136, Type I.
3. FSK Jacket: Aluminum-foil, fiberglass-reinforced scrim with kraft-paper backing; complying with ASTM C1136, Type II.
4. FSP Jacket: Aluminum-foil, fiberglass-reinforced scrim with polyethylene backing; complying with ASTM C1136, Type II.
5. ASJ+: All-service jacket composed of aluminum foil reinforced with glass scrim bonded to a kraft paper interleaving with an outer film leaving no paper exposed; complying with ASTM C1136, Types I, II, III, IV, and VII.

2.9 FIELD-APPLIED JACKETS

A. Field-applied jackets comply with ASTM C921, Type I, unless otherwise indicated.

B. FSK Jacket: Aluminum-foil-face, fiberglass-reinforced scrim with kraft-paper backing.

C. Metal Jacket:

1. Manufacturers: Subject to compliance with requirements, provide products by one of the following:

   a. Johns Manville; a Berkshire Hathaway company.
   b. RPR Products, Inc.

2. Aluminum Jacket: Comply with ASTM B209, Alloy 3003, 3005, 3105, or 5005, Temper H-14.

   a. Factory cut and rolled to size.
   b. Finish and thickness are indicated in field-applied jacket schedules.
   c. Moisture Barrier for Indoor Applications: 3-mil-thick, heat-bonded polyethylene and kraft paper.
   d. Moisture Barrier for Outdoor Applications: 3-mil-thick polysurlyn.

3. Stainless-Steel Jacket: ASTM A167 or ASTM A240/A240M.

   a. Factory cut and rolled to size.
   b. Material, finish, and thickness are indicated in field-applied jacket schedules.
   c. Moisture Barrier for Indoor Applications: 3-mil-thick, heat-bonded polyethylene and kraft paper.
   d. Moisture Barrier for Outdoor Applications: 3-mil-thick polysurlyn.

D. Self-Adhesive Outdoor Jacket (Asphaltic): 60-mil-thick, laminated vapor barrier and waterproofing membrane for installation over insulation located aboveground outdoors; consisting of a rubberized bituminous resin on a cross laminated polyethylene film covered with white aluminum-foil facing.

1. Manufacturers: Subject to compliance with requirements, provide products by one of the following:

   a. MFM Building Products Corp.
   b. Polyguard Products, Inc.

E. Self-Adhesive Indoor/Outdoor Jacket (Non-Asphaltic): Vapor barrier and waterproofing jacket for installation over insulation located aboveground outdoors or indoors. Specialized jacket has five layers of laminated aluminum and polyester film with low-temperature acrylic pressure-sensitive adhesive. Outer aluminum surface is coated with UV-resistant coating for protection from environmental contaminants.

1. Manufacturers: Subject to compliance with requirements, provide products by one of the following:

   a. 3M.
   b. Foster Brand; H. B. Fuller Construction Products.
   c. Ideal Tape Co., Inc., an American Biltrite Company.

2. Permeance: 0.00 perm as tested in accordance with ASTM F1249.
3. Flamespread/Smoke Developed: 25/50 as tested in accordance with ASTM E84.
4. Aluminum Finish: Smooth.

2.10 FIELD-APPLIED FABRIC-REINFORCING MESH

A. Woven Glass-Fiber Mesh: Approximately 6 oz./sq. yd. with a thread count of 5 strands by 5 strands/sq. in. for covering ducts.

1. Manufacturers: Subject to compliance with requirements, provide products by one of the following:

   a. Childers Brand; H. B. Fuller Construction Products.

b. Foster Brand; H. B. Fuller Construction Products.

B. Woven Polyester Mesh: Approximately 1 oz./sq. yd. with a thread count of 10 strands by 10 strands/sq. in., in a Leno weave, for ducts.

1. Manufacturers: Subject to compliance with requirements, provide products by one of the following:

a. Childers Brand; H. B. Fuller Construction Products.
b. Foster Brand; H. B. Fuller Construction Products.
c. Vimasco Corporation.

2.11 FIELD-APPLIED CLOTHS

A. Woven Glass-Fiber Cloth: Comply with MIL-C-20079H, Type I, plain weave, and presized a minimum of 8 oz./sq. yd..

1. Manufacturers: Subject to compliance with requirements, provide products by the following:

a. Alpha Associates, Inc.

2.12 TAPES

A. ASJ Tape: White vapor-retarder tape matching factory-applied jacket with acrylic adhesive, complying with ASTM C1136.

1. Manufacturers: Subject to compliance with requirements, provide products by one of the following:

a. 3M Industrial Adhesives and Tapes Division.
b. Avery Dennison Corporation, Specialty Tapes Division.
c. Ideal Tape Co., Inc., an American Biltrite Company.
d. Knauf Insulation.

2. Width: 3 inches.
3. Thickness: 11.5 mils.
4. Adhesion: 90 ounces force/inch in width.
5. Elongation: 2 percent.
6. Tensile Strength: 40 lbf/inch in width.
7. ASJ Tape Disks and Squares: Precut disks or squares of ASJ tape.

B. FSK Tape: Foil-face, vapor-retarder tape matching factory-applied jacket with acrylic adhesive; complying with ASTM C1136.

1. Manufacturers: Subject to compliance with requirements, provide products by one of the following:

a. 3M Industrial Adhesives and Tapes Division.
b. Avery Dennison Corporation, Specialty Tapes Division.
c. Ideal Tape Co., Inc., an American Biltrite Company.
d. Knauf Insulation.

2. Width: 3 inches.
3. Thickness: 6.5 mils.

4. Adhesion: 90 ounces force/inch in width.
5. Elongation: 2 percent.
6. Tensile Strength: 40 lbf/inch in width.
7. FSK Tape Disks and Squares: Precut disks or squares of FSK tape.

C. Aluminum-Foil Tape: Vapor-retarder tape with acrylic adhesive.

1. Manufacturers: Subject to compliance with requirements, provide products by one of the following:

   a. 3M Industrial Adhesives and Tapes Division.
   b. Avery Dennison Corporation, Specialty Tapes Division.
   c. Ideal Tape Co., Inc., an American Biltrite Company.
   d. Knauf Insulation.

2. Width: 2 inches.
3. Thickness: 3.7 mils.
4. Adhesion: 100 ounces force/inch in width.
5. Elongation: 5 percent.
6. Tensile Strength: 34 lbf/inch in width.

2.13 SECUREMENTS

A. Bands:

1. Manufacturers: Subject to compliance with requirements, provide products by one of the following:

   a. Johns Manville; a Berkshire Hathaway company.
   b. RPR Products, Inc.

2. Stainless Steel: ASTM A167 or ASTM A240/A240M, Type 304 or Type 316; 0.015-inch-thick, 3/4-inch-wide with wing seal or closed seal.
3. Aluminum: ASTM B209, Alloy 3003, 3005, 3105, or 5005; Temper H-14, 0.020-inch-thick, 3/4-inch-wide with wing seal or closed seal.
4. Springs: Twin spring set constructed of stainless steel with ends flat and slotted to accept metal bands. Spring size determined by manufacturer for application.

B. Insulation Pins and Hangers:

1. Capacitor-Discharge-Weld Pins: Copper- or zinc-coated steel pin, fully annealed for capacitor-discharge welding, 0.106-inch-diameter shank, length to suit depth of insulation indicated.

   a. Manufacturers: Subject to compliance with requirements, provide products by one of the following:

      1) AGM Industries, Inc.
      2) Gemco.
      3) Midwest Fasteners, Inc.
      4) Nelson Stud Welding.

2. Cupped-Head, Capacitor-Discharge-Weld Pins: Copper- or zinc-coated steel pin, fully annealed for capacitor-discharge welding, 0.106-inch-diameter shank, length to suit depth of insulation indicated with integral 1-1/2-inch galvanized carbon-steel washer.

   a. Manufacturers: Subject to compliance with requirements, provide products by one of the following:

      1) AGM Industries, Inc.
      2) CL WARD & Family Inc.
      3) Gemco.
      4) Midwest Fasteners, Inc.
      5) Nelson Stud Welding.

3. Metal, Adhesively Attached, Perforated-Base Insulation Hangers: Baseplate welded to projecting spindle that is capable of holding insulation, of thickness indicated, securely in position indicated when self-locking washer is in place. Comply with the following requirements:

   a. Manufacturers: Subject to compliance with requirements, provide products by one of the following:

      1) AGM Industries, Inc.
      2) Gemco.
      3) Midwest Fasteners, Inc.

   b. Baseplate: Perforated, galvanized carbon-steel sheet, 0.030-inch-thick by 2 inches square.
   c. Spindle: Copper- or zinc-coated, low-carbon steel, fully annealed, 0.106-inch-diameter shank, length to suit depth of insulation indicated.
   d. Adhesive: Recommended by hanger manufacturer. Product with demonstrated capability to bond insulation hanger securely to substrates indicated without damaging insulation, hangers, and substrates.

4. Nonmetal, Adhesively Attached, Perforated-Base Insulation Hangers: Baseplate fastened to projecting spindle that is capable of holding insulation, of thickness indicated, securely in position indicated when self-locking washer is in place. Comply with the following requirements:

   a. Manufacturers: Subject to compliance with requirements, provide products by one of the following:

      1) Gemco.
      2) Midwest Fasteners, Inc.

   b. Baseplate: Perforated, nylon sheet, 0.030-inch-thick by 1-1/2 inches in diameter.
   c. Spindle: Nylon, 0.106-inch-diameter shank, length to suit depth of insulation indicated, up to 2-1/2 inches.
   d. Adhesive: Recommended by hanger manufacturer. Product with demonstrated capability to bond insulation hanger securely to substrates indicated without damaging insulation, hangers, and substrates.

5. Self-Sticking-Base Insulation Hangers: Baseplate welded to projecting spindle that is capable of holding insulation, of thickness indicated, securely in position indicated when self-locking washer is in place. Comply with the following requirements:

a. Manufacturers: Subject to compliance with requirements, provide products by one of the following:

1) AGM Industries, Inc.
2) Gemco.
3) Midwest Fasteners, Inc.

b. Baseplate: Galvanized carbon-steel sheet, 0.030-inch-thick by 2 inches square.
c. Spindle: Copper- or zinc-coated, low-carbon steel, fully annealed, 0.106-inch-diameter shank, length to suit depth of insulation indicated.
d. Adhesive-backed base with a peel-off protective cover.

6. Insulation-Retaining Washers: Self-locking washers formed from 0.016-inch-thick, galvanized-steel sheet, with beveled edge sized as required to hold insulation securely in place but not less than 1-1/2 inches in diameter.

a. Manufacturers: Subject to compliance with requirements, provide products by one of the following:

1) AGM Industries, Inc.
2) Gemco.
3) Midwest Fasteners, Inc.
4) Nelson Stud Welding.

b. Protect ends with capped self-locking washers incorporating a spring steel insert to ensure permanent retention of cap in exposed locations.

7. Nonmetal Insulation-Retaining Washers: Self-locking washers formed from 0.016-inch-thick nylon sheet, with beveled edge sized as required to hold insulation securely in place but not less than 1-1/2 inches in diameter.

a. Manufacturers: Subject to compliance with requirements, provide products by one of the following:

1) Gemco.
2) Midwest Fasteners, Inc.

C. Staples: Outward-clinching insulation staples, nominal 3/4-inch-wide, stainless steel or Monel.

D. Wire: 0.062-inch soft-annealed, stainless steel.

1. Manufacturers: Subject to compliance with requirements, provide products by one of the following:

a. C & F Wire.
b. Johns Manville; a Berkshire Hathaway company.
c. RPR Products, Inc.

2.14 CORNER ANGLES

A. PVC Corner Angles: 30 mils thick, minimum 1 by 1 inch, PVC in accordance with ASTM D1784, Class 16354-C. White or color-coded to match adjacent surface.

B. Aluminum Corner Angles: 0.040-inch-thick, minimum 1 by 1 inch, aluminum in accordance with ASTM B209, Alloy 3003, 3005, 3105, or 5005; Temper H-14.

C. Stainless-Steel Corner Angles: 0.024-inch-thick, minimum 1 by 1 inch, stainless steel in accordance with ASTM A167 or ASTM A240/A240M, Type 304 or Type 316.

PART 3 - EXECUTION

3.1 EXAMINATION

A. Examine substrates and conditions for compliance with requirements for installation tolerances and other conditions affecting performance of insulation application.

1. Verify that systems to be insulated have been tested and are free of defects.
2. Verify that surfaces to be insulated are clean and dry.

B. Proceed with installation only after unsatisfactory conditions have been corrected.

3.2 PREPARATION

A. Surface Preparation: Clean and dry surfaces to receive insulation. Remove materials that will adversely affect insulation application.

3.3 GENERAL INSTALLATION REQUIREMENTS

A. Install insulation materials, accessories, and finishes with smooth, straight, and even surfaces, free of voids throughout the length of ducts and fittings.

B. Install insulation materials, vapor barriers or retarders, jackets, and thicknesses required for each item of duct system as specified in insulation system schedules.

C. Install accessories compatible with insulation materials and suitable for the service. Install accessories that do not corrode, compress, or otherwise damage insulation or jacket .

D. Install insulation with longitudinal seams at top and bottom of horizontal runs.

E. Install multiple layers of insulation with longitudinal and end seams staggered.

F. Keep insulation materials dry during application and finishing. Replace insulation materials that get wet during storage or in the installation process before being properly covered and sealed in accordance with Contract Documents.

G. Install insulation with tight longitudinal seams and end joints. Bond seams and joints with adhesive recommended by insulation material manufacturer.

H. Install insulation with least number of joints practical.

I. Where vapor barrier is indicated, seal joints, seams, and penetrations in insulation at hangers, supports, anchors, and other projections with vapor-barrier mastic.

1. Install insulation continuously through hangers and around anchor attachments.
2. For insulation application where vapor barriers are indicated, extend insulation on anchor legs from point of attachment to supported item to point of attachment to structure. Taper and seal ends at attachment to structure with vapor-barrier mastic.

3. Install insert materials and install insulation to tightly join the insert. Seal insulation to insulation inserts with adhesive or sealing compound recommended by insulation material manufacturer.

J. Apply adhesives, mastics, and sealants at manufacturer's recommended coverage rate and wet and dry film thicknesses.

K. Install insulation with factory-applied jackets as follows:

1. Draw jacket tight and smooth, but not to the extent of creating wrinkles or areas of compression in the insulation.
2. Cover circumferential joints with 3-inch-wide strips, of same material as insulation jacket. Secure strips with adhesive and outward clinching staples along both edges of strip, spaced 4 inches o.c.
3. Overlap jacket longitudinal seams at least 1-1/2 inches. Clean and dry surface to receive self-sealing lap. Staple laps with outward clinching staples along edge at 2 inches o.c.

   a. For below ambient services, apply vapor-barrier mastic over staples.

4. Cover joints and seams with tape, according to insulation material manufacturer's written instructions, to maintain vapor seal.
5. Where vapor barriers are indicated, apply vapor-barrier mastic on seams and joints and at ends adjacent to duct flanges and fittings.

L. Cut insulation in a manner to avoid compressing insulation.

M. Finish installation with systems at operating conditions. Repair joint separations and cracking due to thermal movement.

N. Repair damaged insulation facings by applying same facing material over damaged areas. Extend patches at least 4 inches beyond damaged areas. Adhere, staple, and seal patches similar to butt joints.

3.4 PENETRATIONS

A. Insulation Installation at Roof Penetrations: Install insulation continuously through roof penetrations.

1. Seal penetrations with flashing sealant.
2. For applications requiring only indoor insulation, terminate insulation above roof surface and seal with joint sealant. For applications requiring indoor and outdoor insulation, install insulation for outdoor applications tightly joined to indoor insulation ends. Seal joint with joint sealant.
3. Extend jacket of outdoor insulation outside roof flashing at least 2 inches below top of roof flashing.
4. Seal jacket to roof flashing with flashing sealant.

B. Insulation Installation at Aboveground Exterior Wall Penetrations: Install insulation continuously through wall penetrations.

1. Seal penetrations with flashing sealant.
2. For applications requiring only indoor insulation, terminate insulation inside wall surface and seal with joint sealant. For applications requiring indoor and outdoor insulation, install

insulation for outdoor applications tightly joined to indoor insulation ends. Seal joint with joint sealant.

3. Extend jacket of outdoor insulation outside wall flashing and overlap wall flashing at least 2 inches.
4. Seal jacket to wall flashing with flashing sealant.

C. Insulation Installation at Interior Wall and Partition Penetrations (That Are Not Fire Rated): Install insulation continuously through walls and partitions.

D. Insulation Installation at Fire-Rated Wall and Partition Penetrations: Terminate insulation at fire damper sleeves for fire-rated wall and partition penetrations. Externally insulate damper sleeves to match adjacent insulation and overlap duct insulation at least 2 inches.

1. Comply with requirements in Section 078413 "Penetration Firestopping."

E. Insulation Installation at Floor Penetrations:

1. Duct: For penetrations through fire-rated assemblies, terminate insulation at fire damper sleeves and externally insulate damper sleeve beyond floor to match adjacent duct insulation. Overlap damper sleeve and duct insulation at least 2 inches.
2. Seal penetrations through fire-rated assemblies. Comply with requirements in Section 078413 "Penetration Firestopping."

3.5 INSTALLATION OF FLEXIBLE ELASTOMERIC INSULATION

A. Comply with manufacturer's written installation instructions and ASTM C1710.

B. Seal longitudinal seams and end joints with manufacturer's recommended adhesive to eliminate openings in insulation that allow passage of air to surface being insulated.

C. Square and Rectangular Ducts and Plenums:

1. Provide 1/4 inch more per side for a tight, compression fit.
2. Cut sheet insulation with the following dimensions:

a. Width of duct plus 1/4-inch, one piece.
b. Height of duct plus 1/4 inch, plus thickness of insulation, two pieces.
c. Width of duct plus 1/4 inch, plus 2 times the thickness of insulation, one piece.

3. Insulate the bottom of the duct with the sheet from (a) above, then the sides with the two sheets from (b) above, and finally the top of the duct with the sheet from (c) above.
4. Insulation without self-adhering backing:

a. Apply 100 percent coverage of manufacturer adhesive on the metal surface, then the insulation, except for the last 1/4 inch where sheets will butt together.
b. Roll sheet down into position.
c. Press two sheets together under compression and apply adhesive at the butt joint to seal the two sheets together.

5. Insulation with self-adhering backing:

a. Peel back release paper in 6- to 8-inch increments and line up sheet.
b. Press firmly to activate adhesive.

c. Align material and continue to line up correctly, pressing firmly while slowly removing release paper.
d. Allow 1/4-inch overlap for compression at butt joints.
e. Apply adhesive at the butt joint to seal the two sheets together.

6. Insulate duct brackets following manufacturer's written installation instructions.

D. Circular Ducts:

1. Determine the circumference of the duct, using a strip of insulation the same thickness as to be used.
2. Cut the sheet to the required size.
3. Apply 100 percent coverage of manufacturer adhesive on the metal surface then the insulation.
4. Apply manufacturer adhesive to the cut surfaces along 100 percent of the longitudinal seam. Press together the seam at the ends and then the middle. Close the entire seam starting from the middle.

3.6 INSTALLATION OF GLASS-FIBER AND MINERAL-WOOL INSULATION

A. Blanket Insulation Installation on Ducts and Plenums: Secure with adhesive and insulation pins.

B. Comply with manufacturer's written installation instructions.

1. Apply adhesives according to manufacturer's recommended coverage rates per unit area, for 100 percent coverage of duct and plenum surfaces.
2. Apply adhesive to entire circumference of ducts and to all surfaces of fittings and transitions.
3. Install either capacitor-discharge-weld pins and speed washers or cupped-head, capacitor-discharge-weld pins on sides and bottom of horizontal ducts and sides of vertical ducts as follows:

a. On duct sides with dimensions 18 inches and smaller, place pins along longitudinal centerline of duct. Space 3 inches maximum from insulation end joints, and 16 inches o.c.
b. On duct sides with dimensions larger than 18 inches, place pins 16 inches o.c. each way, and 3 inches maximum from insulation joints. Install additional pins to hold insulation tightly against surface at cross bracing.
c. Pins may be omitted from top surface of horizontal, rectangular ducts and plenums.
d. Do not over compress insulation during installation.
e. Impale insulation over pins and attach speed washers.
f. Cut excess portion of pins extending beyond speed washers or bend parallel with insulation surface. Cover exposed pins and washers with tape matching insulation facing.

4. For ducts and plenums with surface temperatures below ambient, install a continuous unbroken vapor barrier. Create a facing lap for longitudinal seams and end joints with insulation by removing 2 inches from one edge and one end of insulation segment. Secure laps to adjacent insulation section with 1/2-inch outward-clinching staples, 1-inch o.c. Install vapor barrier consisting of factory- or field-applied jacket, adhesive, vapor-barrier mastic, and sealant at joints, seams, and protrusions.

a. Repair punctures, tears, and penetrations with tape or mastic to maintain vapor-barrier seal.

b. Install vapor stops for ductwork and plenums operating below 50 deg F at 18-foot intervals. Vapor stops consist of vapor-barrier mastic applied in a Z-shaped pattern over insulation face, along butt end of insulation, and over the surface. Cover insulation face and surface to be insulated a width equal to two times the insulation thickness, but not less than 3 inches.

5. Overlap unfaced blankets a minimum of 2 inches on longitudinal seams and end joints. At end joints, secure with steel bands spaced a maximum of 18 inches o.c.
6. Install insulation on rectangular duct elbows and transitions with a full insulation section for each surface. Install insulation on round and flat-oval duct elbows with individually mitered gores cut to fit the elbow.
7. Insulate duct stiffeners, hangers, and flanges that protrude beyond insulation surface with 6-inch-wide strips of same material used to insulate duct. Secure on alternating sides of stiffener, hanger, and flange with pins spaced 6 inches o.c.

C. Board Insulation Installation on Ducts and Plenums: Secure with adhesive and insulation pins.

1. Apply adhesives according to manufacturer's recommended coverage rates per unit area, for 100 percent coverage of duct and plenum surfaces.
2. Apply adhesive to entire circumference of ducts and to all surfaces of fittings and transitions.
3. Install either capacitor-discharge-weld pins and speed washers or cupped-head, capacitor-discharge-weld pins on sides and bottom of horizontal ducts and sides of vertical ducts as follows:

   a. On duct sides with dimensions 18 inches and smaller, place pins along longitudinal centerline of duct. Space 3 inches maximum from insulation end joints, and 16 inches o.c.
   b. On duct sides with dimensions larger than 18 inches, space pins 16 inches o.c. each way, and 3 inches maximum from insulation joints. Install additional pins to hold insulation tightly against surface at cross bracing.
   c. Pins may be omitted from top surface of horizontal, rectangular ducts and plenums.
   d. Do not over compress insulation during installation.
   e. Cut excess portion of pins extending beyond speed washers or bend parallel with insulation surface. Cover exposed pins and washers with tape matching insulation facing.

4. For ducts and plenums with surface temperatures below ambient, install a continuous unbroken vapor barrier. Create a facing lap for longitudinal seams and end joints with insulation by removing 2 inches from one edge and one end of insulation segment. Secure laps to adjacent insulation section with 1/2-inch outward-clinching staples, 1 inch o.c. Install vapor barrier consisting of factory- or field-applied jacket, adhesive, vapor-barrier mastic, and sealant at joints, seams, and protrusions.

   a. Repair punctures, tears, and penetrations with tape or mastic to maintain vapor-barrier seal.
   b. Install vapor stops for ductwork and plenums operating below 50 deg F at 18-foot intervals. Vapor stops consist of vapor-barrier mastic applied in a Z-shaped pattern over insulation face, along butt end of insulation, and over the surface. Cover insulation face and surface to be insulated a width equal to two times the insulation thickness, but not less than 3 inches.

5. Install insulation on rectangular duct elbows and transitions with a full insulation section for each surface. Groove and score insulation to fit as closely as possible to outside and inside radius of elbows. Install insulation on round and flat-oval duct elbows with individually mitered gores cut to fit the elbow.

6. Insulate duct stiffeners, hangers, and flanges that protrude beyond insulation surface with 6-inch-wide strips of same material used to insulate duct. Secure on alternating sides of stiffener, hanger, and flange with pins spaced 6 inches o.c.

3.7 FIELD-APPLIED JACKET INSTALLATION

A. Where glass-cloth jackets are indicated, install directly over bare insulation or insulation with factory-applied jackets.

1. Draw jacket smooth and tight to surface with 2-inch overlap at seams and joints.
2. Embed glass cloth between two 0.062-inch-thick coats of lagging adhesive.
3. Completely encapsulate insulation with coating, leaving no exposed insulation.

B. Where FSK jackets are indicated, install as follows:

1. Draw jacket material smooth and tight.
2. Install lap or joint strips with same material as jacket.
3. Secure jacket to insulation with manufacturer's recommended adhesive.
4. Install jacket with 1-1/2-inch laps at longitudinal seams and 3-inch-wide joint strips at end joints.
5. Seal openings, punctures, and breaks in vapor-retarder jackets and exposed insulation with vapor-barrier mastic.

C. Where PVC jackets are indicated, install with 1-inch overlap at longitudinal seams and end joints; for horizontal applications, install with longitudinal seams along top and bottom of tanks and vessels. Seal with manufacturer's recommended adhesive.

1. Apply two continuous beads of adhesive to seams and joints, one bead under lap and the finish bead along seam and joint edge.

D. Where metal jackets are indicated, install with 2-inch overlap at longitudinal seams and end joints. Overlap longitudinal seams arranged to shed water. Seal end joints with weatherproof sealant recommended by insulation manufacturer. Secure jacket with stainless-steel bands 12 inches o.c. and at end joints.

3.8 FIRE-RATED INSULATION SYSTEM INSTALLATION

A. Comply with manufacturer's written installation instructions.

B. Where fire-rated insulation system is indicated, secure system to ducts and duct hangers and supports to maintain a continuous fire rating.

C. Insulate duct access panels and doors to achieve same fire rating as duct.

D. Install firestopping at penetrations through fire-rated assemblies. Fire-stop systems are specified in Section 078413 "Penetration Firestopping."

3.9 FINISHES

A. Insulation with ASJ, Glass-Cloth, or Other Paintable Jacket Material: Paint jacket with paint system identified below and as specified in Section 099113 "Exterior Painting" and Section 099123 "Interior Painting."

1. Flat Acrylic Finish: Two finish coats over a primer that is compatible with jacket material and finish coat paint. Add fungicidal agent to render fabric mildew proof.

    a. Finish Coat Material: Interior, flat, latex-emulsion size.

B. Flexible Elastomeric Thermal Insulation: After adhesive has fully cured, apply two coats of insulation manufacturer's recommended protective coating.

C. Color: Final color as selected by Architect. Vary first and second coats to allow visual inspection of the completed Work.

D. Do not field paint aluminum or stainless-steel jackets.

3.10 FIELD QUALITY CONTROL

A. Testing Agency: Engage a qualified testing agency to perform tests and inspections.

B. Tests and Inspections:

1. Inspect ductwork, randomly selected by Architect, by removing field-applied jacket and insulation in layers in reverse order of their installation. Extent of inspection is limited to one location(s) for each duct system defined in the "Duct Insulation Schedule, General" Article.

C. All insulation applications will be considered defective Work if sample inspection reveals noncompliance with requirements.

3.11 DUCT INSULATION SCHEDULE, GENERAL

A. Plenums and Ducts Requiring Insulation:

1. Indoor, concealed supply and outdoor air.
2. Indoor, exposed supply and outdoor air.
3. Indoor, concealed return located in unconditioned space.
4. Indoor, exposed return located in unconditioned space.
5. Indoor, concealed, Type I, commercial, kitchen hood exhaust.
6. Indoor, exposed, Type I, commercial, kitchen hood exhaust.
7. Indoor, concealed oven and warewash exhaust.
8. Indoor, exposed oven and warewash exhaust.
9. Indoor, concealed exhaust between isolation damper and penetration of building exterior.
10. Indoor, exposed exhaust between isolation damper and penetration of building exterior.
11. Outdoor, concealed supply and return.
12. Outdoor, exposed supply and return.

B. Items Not Insulated:

1. Fibrous-glass ducts.
2. Metal ducts with duct liner of sufficient thickness to comply with energy code and ASHRAE/IESNA 90.1.
3. Factory-insulated flexible ducts.
4. Factory-insulated plenums and casings.
5. Flexible connectors.
6. Vibration-control devices.

7. Factory-insulated access panels and doors.

3.12 INDOOR DUCT AND PLENUM INSULATION SCHEDULE

A. Concealed, round and flat-oval, supply-air duct insulation is the following:

1. Glass-Fiber Blanket: 2 inches thick and 0.75 lb/cu. ft. nominal density.

B. Concealed, round and flat-oval, return-air duct insulation is the following:

1. Glass-Fiber Blanket: 2 inches thick and 0.75 lb/cu. ft. nominal density.

C. Concealed, round and flat-oval, outdoor-air duct insulation is the following:

1. Glass-Fiber Blanket: 2 inches thick and 0.75 lb/cu. ft. nominal density.

D. Concealed, round and flat-oval, exhaust-air duct insulation is the following:

1. Glass-Fiber Blanket: 2 inches thick and 0.75 lb/cu. ft. nominal density.

E. Concealed, rectangular, supply-air duct insulation is one of the following:

1. Glass-Fiber Blanket: 2 inches thick and 0.75 lb/cu. ft. nominal density.

F. Concealed, rectangular, return-air duct insulation is the following:

1. Glass-Fiber Blanket: 2 inches thick and 0.75 lb/cu. ft. nominal density.

G. Concealed, rectangular, outdoor-air duct insulation is the following:

1. Glass-Fiber Blanket: 2 inches thick and 0.75 lb/cu. ft. nominal density.

H. Concealed, rectangular, exhaust-air duct insulation between isolation damper and penetration of building exterior is the following:
1. Glass-Fiber Blanket: 2 inches thick and 0.75 lb/cu. ft. nominal density.

I. Concealed, Type I, Commercial, Kitchen Hood Exhaust Duct and Plenum Insulation: Fire-rated; thickness as required to achieve 2-hour fire rating.

J. Concealed, supply-air plenum insulation is one of the following:

1. Glass-Fiber Blanket: 2 inches thick and 0.75 lb/cu. ft. nominal density.
2. Glass-Fiber Board: 2 inches thick and 3 lb/cu. ft. nominal density.

K. Concealed, return-air plenum insulation is one of the following:

1. Glass-Fiber Blanket: 2 inches thick and 0.75 lb/cu. ft. nominal density.
2. Glass-Fiber Board: 2 inches thick and 3 lb/cu. ft. nominal density.

L. Concealed, outdoor-air plenum insulation is one of the following:

1. Glass-Fiber Blanket: 2 inches thick and 0.75 lb/cu. ft. nominal density.
2. Glass-Fiber Board: 2 inches thick and 3 lb/cu. ft. nominal density.

M. Concealed, exhaust-air plenum insulation is one of the following:

1. Glass-Fiber Blanket: 2 inches thick and 0.75 lb/cu. ft. nominal density.
2. Glass-Fiber Board: 2 inches thick and 3 lb/cu. ft. nominal density.

N. Exposed, round and flat-oval, supply-air duct insulation is one of the following:

1. Glass-Fiber Blanket: 2 inches thick and 0.75 lb/cu. ft. nominal density.
2. Glass-Fiber Pipe and Tank: 2 inches thick.

O. Exposed, round and flat-oval, return-air duct insulation is one of the following:

1. Glass-Fiber Blanket: 2 inches thick and 0.75 lb/cu. ft. nominal density.
2. Glass-Fiber Pipe and Tank: 2 inches thick.

P. Exposed, round and flat-oval, outdoor-air duct insulation is one of the following:

1. Glass-Fiber Blanket: 2 inches thick and 0.75 lb/cu. ft. nominal density.
2. Glass-Fiber Pipe and Tank: 2 inches thick.

Q. Exposed, round and flat-oval, exhaust-air duct insulation is one of the following:

1. Glass-Fiber Blanket: 2 inches thick and 0.75 lb/cu. ft. nominal density.
2. Glass-Fiber Pipe and Tank: 2 inches thick.

R. Exposed, rectangular, supply-air duct insulation is one of the following:

1. Glass-Fiber Blanket: 2 inches thick and 0.75 lb/cu. ft. nominal density.
2. Glass-Fiber Board: 2 inches thick and 3 lb/cu. ft. nominal density.

S. Exposed, rectangular, return-air duct insulation is one of the following:

1. Glass-Fiber Blanket: 2 inches thick and 0.75 lb/cu. ft. nominal density.
2. Glass-Fiber Board: 2 inches thick and 3 lb/cu. ft. nominal density.

T. Exposed, rectangular, outdoor-air duct insulation is one of the following:

1. Glass-Fiber Blanket: 2 inches thick and 0.75 lb/cu. ft. nominal density.
2. Glass-Fiber Board: 2 inches thick and 3 lb/cu. ft. nominal density.

U. Exposed, rectangular, exhaust-air duct insulation is one of the following:

1. Glass-Fiber Blanket: 2 inches thick and 0.75 lb/cu. ft. nominal density.
2. Glass-Fiber Board: 2 inches thick and 3 lb/cu. ft. nominal density.

V. Exposed, Type I, Commercial, Kitchen Hood Exhaust Duct and Plenum Insulation: Fire-rated blanket or board; thickness as required to achieve 2-hour fire rating.

W. Exposed, supply-air plenum insulation is one of the following:

1. Glass-Fiber Blanket: 2 inches thick and 0.75 lb/cu. ft. nominal density.
2. Glass-Fiber Board: 2 inches thick and 3 lb/cu. ft. nominal density.

X. Exposed, return-air plenum insulation is one of the following:

1. Glass-Fiber Blanket: 2 inches thick and 0.75 lb/cu. ft. nominal density.
2. Glass-Fiber Board: 2 inches thick and 3 lb/cu. ft. nominal density.

Y. Exposed, outdoor-air plenum insulation is one of the following:

1. Glass-Fiber Blanket: 2 inches thick and 0.75 lb/cu. ft. nominal density.
2. Glass-Fiber Board: 2 inches thick and 3 lb/cu. ft. nominal density.

Z. Exposed, exhaust-air plenum insulation is one of the following:

1. Glass-Fiber Blanket: 2 inches thick and 0.75 lb/cu. ft. nominal density.
2. Glass-Fiber Board: 2 inches thick and 3 lb/cu. ft. nominal density.

3.13 ABOVEGROUND, OUTDOOR DUCT AND PLENUM INSULATION SCHEDULE

A. Insulation materials and thicknesses are identified below. If more than one material is listed for a duct system, selection from materials listed is Contractor's option.

B. Concealed, round and flat-oval, supply-air duct insulation is one of the following:

1. Glass-Fiber Blanket: 3 inches and 0.75 lb/cu. ft. nominal density.
2. Mineral Wool Blanket: 2 inches thick and 4 lb/cu. ft. nominal density.

C. Concealed, round and flat-oval, return-air duct insulation is one of the following:

1. Glass-Fiber Blanket: 3 inches and 0.75 lb/cu. ft. nominal density.
2. Mineral Wool Blanket: 2 inches thick and 4 lb/cu. ft. nominal density.

D. Concealed, round and flat-oval, outdoor-air duct insulation is one of the following:

1. Glass-Fiber Blanket: 3 inches and 0.75 lb/cu. ft. nominal density.
2. Mineral Wool Blanket: 2 inches thick and 4 lb/cu. ft. nominal density.

E. Concealed, rectangular, supply-air duct insulation is one of the following:

1. Glass-Fiber Blanket: 3 inches and 0.75 lb/cu. ft. nominal density.
2. Glass-Fiber Board: 3 inches thick and 2 lb/cu. ft. nominal density.

F. Concealed, rectangular, return-air duct insulation is one of the following:

1. Glass-Fiber Blanket: 3 inches and 0.75 lb/cu. ft. nominal density.
2. Glass-Fiber Board: 3 inches thick and 2 lb/cu. ft. nominal density.

G. Concealed, supply-air plenum insulation is one of the following:

1. Glass-Fiber Blanket: 3 inches and 0.75 lb/cu. ft. nominal density.
2. Glass-Fiber Board: 3 inches thick and 2 lb/cu. ft. nominal density.

H. Concealed, return-air plenum insulation is one of the following:

1. Glass-Fiber Blanket: 3 inches and 0.75 lb/cu. ft. nominal density.
2. Glass-Fiber Board: 3 inches thick and 2 lb/cu. ft. nominal density.

I. Exposed, round and flat-oval, supply-air duct insulation is one of the following:

1. Glass-Fiber Blanket: 3 inches and 0.75 lb/cu. ft. nominal density.
2. Mineral Wool Blanket: 2 inches thick and 4 lb/cu. ft. nominal density.

J. Exposed, round and flat-oval, return-air duct insulation is one of the following:

1. Glass-Fiber Blanket: 3 inches and 0.75 lb/cu. ft. nominal density.
2. Mineral Wool Blanket: 2 inches thick and 4 lb/cu. ft. nominal density.

K. Exposed, rectangular, supply-air duct insulation is one of the following:

1. Glass-Fiber Blanket: 3 inches and 0.75 lb/cu. ft. nominal density.
2. Glass-Fiber Board: 3 inches thick and 2 lb/cu. ft. nominal density.

L. Exposed, rectangular, return-air duct insulation is one of the following:

1. Glass-Fiber Blanket: 3 inches and 0.75 lb/cu. ft. nominal density.
2. Glass-Fiber Board: 3 inches thick and 2 lb/cu. ft. nominal density.

M. Exposed, supply-air plenum insulation is one of the following:

1. Glass-Fiber Blanket: 3 inches and 0.75 lb/cu. ft. nominal density.
2. Glass-Fiber Board: 3 inches thick and 2 lb/cu. ft. nominal density.

N. Exposed, return-air plenum insulation is one of the following:

1. Glass-Fiber Blanket: 3 inches and 0.75 lb/cu. ft. nominal density.
2. Glass-Fiber Board: 3 inches thick and 2 lb/cu. ft. nominal density.

3.14 INDOOR, FIELD-APPLIED JACKET SCHEDULE

A. Install jacket over insulation material. For insulation with factory-applied jacket, install the field-applied jacket over the factory-applied jacket.

B. If more than one material is listed, selection from materials listed is Contractor's option.

C. Ducts and Plenums, Concealed:

1. None.

D. Ducts and Plenums, Exposed:

1. None.

3.15 OUTDOOR, FIELD-APPLIED JACKET SCHEDULE

A. Install jacket over insulation material. For insulation with factory-applied jacket, install the field-applied jacket over the factory-applied jacket.

B. If more than one material is listed, selection from materials listed is Contractor's option.

C. Ducts and Plenums, Concealed:

1. Aluminum, Smooth: 0.020 inch thick.

2. Stainless Steel, Type 304 or Type 316, Smooth 2B Finish: 0.016 inch thick.

D. Ducts and Plenums, Exposed, up to 48 Inches in Diameter or with Flat Surfaces up to 72 Inches:

1. Aluminum, Smooth: 0.024 inch thick.
2. Stainless Steel, Type 304, or Type 316, Smooth 2B Finish: 0.016 inch thick.

E. Ducts and Plenums, Exposed, Larger Than 48 Inches in Diameter or with Flat Surfaces Larger Than 72 Inches:

1. Aluminum, Smooth: 0.020 inch thick.
2. Stainless Steel, Type 304, or Type 316, Smooth 2B Finish: 0.016 inch thick.

END OF SECTION 23 07 13

SECTION 23 07 16 - HVAC EQUIPMENT INSULATION

PART 1 - GENERAL

1.1 SUMMARY

A. Section includes insulating HVAC equipment that is not factory insulated.

B. Related Sections:

1. Section 230713 "Duct Insulation."
2. Section 230719 "HVAC Piping Insulation."

1.2 ACTION SUBMITTALS

A. Product Data: For each type of product. Include thermal conductivity, water-vapor permeance thickness, and jackets (both factory and field applied, if any).

B. Sustainable Design Submittals:

1. Product Data: For sealants, indicating VOC content.
2. Laboratory Test Reports: For sealants, indicating compliance with requirements for low-emitting materials.

C. Shop Drawings: Include plans, elevations, sections, details, and attachments to other work.

1. Detail removable insulation at equipment connections.
2. Detail application of field-applied jackets.
3. Detail application at linkages of control devices.
4. Detail field application for each equipment type.

D. Samples: For each type of insulation and jacket indicated. Identify each Sample, describing product and intended use. Sample sizes are as follows:

1. Sheet Form Insulation Materials: 12 inches square.
2. Sheet Jacket Materials: 12 inches square.
3. Manufacturer's Color Charts: For products where color is specified, show the full range of colors available for each type of finish material.

1.3 INFORMATIONAL SUBMITTALS

A. Qualification Data: For qualified Installer.

B. Material Test Reports: From a qualified testing agency acceptable to authorities having jurisdiction indicating, interpreting, and certifying test results for compliance of insulation materials, sealers, attachments, cements, and jackets, with requirements indicated. Include dates of tests and test methods employed.

C. Field quality-control reports.

1.4 QUALITY ASSURANCE

A. Installer Qualifications: Skilled mechanics who have successfully completed an apprenticeship program or craft training program, certified by the Department of Labor, Bureau of Apprenticeship and Training.

B. Mockups: Before installing insulation, build mockups for each type of insulation and finish listed below to demonstrate quality of insulation application and finishes. Build mockups in the location indicated or, if not indicated, as directed by Architect. Use materials indicated for the completed Work.

1. Equipment Mockups:

   a. One chilled-water pump and one heating-hot-water pump.
   b. One tank or vessel.

2. For each mockup, fabricate cutaway sections to allow observation of application details for insulation materials, adhesives, mastics, attachments, and jackets.
3. Notify Architect seven days in advance of dates and times when mockups will be constructed.
4. Obtain Architect's approval of mockups before starting insulation application.
5. Approval of mockups does not constitute approval of deviations from the Contract Documents contained in mockups unless Architect specifically approves such deviations in writing.
6. Maintain mockups during construction in an undisturbed condition as a standard for judging the completed Work.
7. Demolish and remove mockups when directed.

1.5 DELIVERY, STORAGE, AND HANDLING

A. Packaging: Insulation system materials are to be delivered to the Project site in unopened containers. The packaging is to include, the name of the manufacturer, fabricator, type, description, and size, as well as ASTM standard designation, and maximum use temperature.

1.6 COORDINATION

A. Coordinate sizes and locations of supports, hangers, and insulation shields specified in Section 230529 "Hangers and Supports for HVAC Piping and Equipment."

B. Coordinate clearance requirements with equipment Installer for equipment insulation application.

C. Coordinate installation and testing of heat tracing.

1.7 SCHEDULING

A. Schedule insulation application after pressure testing systems and, where required, after installing and testing heat tracing. Insulation application may begin on segments that have satisfactory test results.

PART 2 - PRODUCTS

2.1 PERFORMANCE REQUIREMENTS

A. Surface-Burning Characteristics: For insulation and related materials, as determined by testing identical products in accordance with ASTM E84, by a testing agency acceptable to authorities having jurisdiction. Factory label insulation, jacket materials, adhesive, mastic, tapes, and cement material containers with appropriate markings of applicable testing agency.

1. All Insulation Installed Indoors and Outdoors: Flame-spread index of 25 or less, and smoke-developed index of 50 or less.

2.2 INSULATION MATERIALS

A. Comply with requirements in "Breeching Insulation Schedule," "Indoor Equipment Insulation Schedule," and "Outdoor, Aboveground Equipment Insulation Schedule" articles for where insulating materials are applied.

B. Products do not contain asbestos, lead, mercury, or mercury compounds.

C. Products that come in contact with stainless steel have a leachable chloride content of less than 50 ppm when tested in accordance with ASTM C871.

D. Insulation materials for use on austenitic stainless steel are qualified as acceptable in accordance with ASTM C795.

E. Foam insulation materials do not use CFC or HCFC blowing agents in the manufacturing process.

F. Cellular Glass: Inorganic, incombustible, foamed or cellulated glass with annealed, rigid, hermetically sealed cells. Comply with ASTM C552.

1. Manufacturers: Subject to compliance with requirements, provide products by the following:

a. Owens Corning.

2. Block Insulation: Type I.
3. Special-Shaped Insulation: Type III.
4. Board Insulation: Type IV.
5. Fabricated shapes in accordance with ASTM C450 and ASTM C585.
6. Factory-applied jacket requirements are specified in "Factory-Applied Jackets" Article.

G. Flexible Elastomeric: Closed-cell or expanded-rubber materials; suitable for maximum use temperature between minus 70 deg F and 220 deg F. Comply with ASTM C534/C534M, Type II for sheet materials.

1. Manufacturers: Subject to compliance with requirements, provide products by one of the following:

a. Aeroflex USA.
b. Armacell LLC.
c. K-Flex USA.

H. Glass-Fiber Blanket: Glass fibers bonded with a thermosetting resin; suitable for maximum use temperature up to 450 deg F in accordance with ASTM C411. Comply with ASTM C553, Type II, and ASTM C1290, Type III, with factory-applied FSK jacket. Factory-applied jacket requirements are specified in "Factory-Applied Jackets" Article.

1. Manufacturers: Subject to compliance with requirements, provide products by one of the following:

   a. CertainTeed Corporation; Saint-Gobain North America.
   b. Johns Manville; a Berkshire Hathaway company.
   c. Knauf Insulation.
   d. Owens Corning.

I. High-Temperature, Glass-Fiber Blanket: Glass fibers bonded with a thermosetting resin, unfaced; suitable for maximum use temperature up to 1000 deg F. Comply with ASTM C553, Type V.

1. Manufacturers: Subject to compliance with requirements, provide products by one of the following:

   a. CertainTeed Corporation; Saint-Gobain North America.
   b. Johns Manville; a Berkshire Hathaway company.
   c. Knauf Insulation.
   d. Owens Corning.

J. Glass-Fiber Board: Glass fibers bonded with a thermosetting resin; suitable for maximum use temperature between 35 deg F and 250 deg F for jacketed and between 35 deg F and 450 deg F for unfaced in accordance with ASTM C411. Comply with ASTM C612, Type IA or Type IB. Provide insulation with factory-applied FSK jacket. Factory-applied jacket requirements are specified in "Factory-Applied Jackets" Article.

1. Manufacturers: Subject to compliance with requirements, provide products by one of the following:

   a. CertainTeed Corporation; Saint-Gobain North America.
   b. Johns Manville; a Berkshire Hathaway company.
   c. Knauf Insulation.
   d. Owens Corning.

K. High-Temperature, Glass-Fiber Board: Glass fibers bonded with a thermosetting resin; suitable for maximum use temperature up to 1000 deg F in accordance with ASTM C411. Comply with ASTM C612, Type III, unfaced.

1. Manufacturers: Subject to compliance with requirements, provide products by one of the following:

   a. CertainTeed Corporation; Saint-Gobain North America.
   b. Johns Manville; a Berkshire Hathaway company.
   c. Knauf Insulation.
   d. Owens Corning.

L. Glass-Fiber, Pipe and Tank: Glass fibers bonded with a thermosetting resin; suitable for maximum use temperature between 35 deg F and 850 deg F, in accordance with ASTM C411. Comply with ASTM C1393.

1. Manufacturers: Subject to compliance with requirements, provide products by one of the following:

   a. CertainTeed Corporation; Saint-Gobain North America.
   b. Johns Manville; a Berkshire Hathaway company.
   c. Knauf Insulation.
   d. Owens Corning.

2. Semirigid board material with factory-applied FSK jacket.
3. Factory-applied jacket requirements are specified in "Factory-Applied Jackets" Article.

2.3 INSULATING CEMENTS

A. Glass-Fiber and Mineral Wool Insulating Cement: Comply with ASTM C195.

1. Manufacturers: Subject to compliance with requirements, available manufacturers offering products that may be incorporated into the Work include, but are not limited to the following:

   a. Ramco Insulation, Inc.

B. Glass-Fiber and Mineral Wool, Hydraulic-Setting Insulating and Finishing Cement: Comply with ASTM C449.

1. Manufacturers: Subject to compliance with requirements, available manufacturers offering products that may be incorporated into the Work include, but are not limited to the following:

   a. Ramco Insulation, Inc.

2.4 ADHESIVES

A. Materials are compatible with insulation materials, jackets, and substrates and for bonding insulation to itself and to surfaces to be insulated unless otherwise indicated.

B. Cellular-Glass Adhesive: Two-component, thermosetting urethane adhesive containing no flammable solvents, with a service temperature range of minus 100 to plus 200 deg F.

1. Manufacturers: Subject to compliance with requirements, provide products by one of the following:

   a. Childers Brand; H. B. Fuller Construction Products.
   b. Foster Brand; H. B. Fuller Construction Products.

2. Adhesive: As recommended by cellular glass manufacturer and with a VOC content of 80 g/L or less.
3. Verify adhesive complies with the testing and product requirements of the California Department of Public Health's "Standard Method for the Testing and Evaluation of Volatile Organic Chemical Emissions from Indoor Sources Using Environmental Chambers."

C. Flexible Elastomeric and Polyolefin Adhesive: Solvent-based adhesive.

1. Manufacturers: Subject to compliance with requirements, provide products by one of the following:

   a. Aeroflex USA.
   b. Armacell LLC.
   c. K-Flex USA.

2. Verify adhesives have a VOC content of 50 g/L or less.
3. Verify adhesive complies with the testing and product requirements of the California Department of Public Health's "Standard Method for the Testing and Evaluation of Volatile Organic Chemical Emissions from Indoor Sources Using Environmental Chambers."
4. Flame-spread index is 25 or less and smoke-developed index is 50 or less as tested in accordance with ASTM E84.
5. Wet Flash Point: Below 0 deg F
6. Service Temperature Range: 40 to 200 deg F.
7. Color: Black.

D. Glass-Fiber and Mineral Wool Adhesive: Comply with MIL-A-3316C, Class 2, Grade A.

1. Manufacturers: Subject to compliance with requirements, provide products by one of the following:

   a. Childers Brand; H. B. Fuller Construction Products.
   b. Foster Brand; H. B. Fuller Construction Products.

2. Adhesive: As recommended by mineral fiber manufacturer and with a VOC content of 80 g/L or less.
3. Verify adhesive complies with the testing and product requirements of the California Department of Public Health's "Standard Method for the Testing and Evaluation of Volatile Organic Chemical Emissions from Indoor Sources Using Environmental Chambers."

E. ASJ Adhesive and FSK and PVDC Jacket Adhesive: Comply with MIL-A-3316C, Class 2, Grade A for bonding insulation jacket lap seams and joints.

1. Manufacturers: Subject to compliance with requirements, provide products by one of the following:

   a. Childers Brand; H. B. Fuller Construction Products.
   b. Foster Brand; H. B. Fuller Construction Products.

2. Verify adhesives have a VOC content of 50 g/L or less.
3. Verify adhesive complies with the testing and product requirements of the California Department of Public Health's "Standard Method for the Testing and Evaluation of Volatile Organic Chemical Emissions from Indoor Sources Using Environmental Chambers."

2.5 MASTICS AND COATINGS

A. Materials are compatible with insulation materials, jackets, and substrates.

1. Mastics: As recommended by insulation manufacturer and with a VOC content of 50 g/L or less.

2. Verify mastics comply with the testing and product requirements of the California Department of Public Health's "Standard Method for the Testing and Evaluation of Volatile Organic Chemical Emissions from Indoor Sources Using Environmental Chambers."

B. Vapor-Retarder Mastic, Water Based: Suitable for indoor and outdoor use on below-ambient services.

1. Manufacturers: Subject to compliance with requirements, provide products by one of the following:

a. Childers Brand; H. B. Fuller Construction Products.
b. Foster Brand; H. B. Fuller Construction Products.
c. Knauf Insulation.

2. Water-Vapor Permeance: Comply with ASTM E96/E96M or ASTM F1249.
3. Service Temperature Range: 0 to plus 180 deg F.
4. Comply with MIL-PRF-19565C, Type II, for permeance requirements, with supplier listing on DOD QPD - Qualified Products Database.
5. Color: White.

C. Breather Mastic: Water based; suitable for indoor and outdoor use on above-ambient services.

1. Manufacturers: Subject to compliance with requirements, provide products by one of the following:

a. Childers Brand; H. B. Fuller Construction Products.
b. Foster Brand; H. B. Fuller Construction Products.
c. Knauf Insulation.

2. Water-Vapor Permeance: ASTM E96/E96M, greater than 1.0 perm at manufacturer's recommended dry film thickness.
3. Service Temperature Range: 0 to plus 180 deg F.
4. Color: White.

2.6 LAGGING ADHESIVES

A. Adhesives comply with MIL-A-3316C, Class I, Grade A and are compatible with insulation materials, jackets, and substrates.

1. Manufacturers: Subject to compliance with requirements, provide products by one of the following:

a. Childers Brand; H. B. Fuller Construction Products.
b. Foster Brand; H. B. Fuller Construction Products.

2. Verify adhesive is as recommended by insulation manufacturer and has a VOC content of 50 g/L or less.
3. Verify adhesive complies with the testing and product requirements of the California Department of Public Health's "Standard Method for the Testing and Evaluation of Volatile Organic Chemical Emissions from Indoor Sources Using Environmental Chambers."
4. Fire-resistant, water-based lagging adhesive and coating for use indoors to adhere fire-resistant lagging cloths over equipment insulation.
5. Service Temperature Range: 0 to plus 180 deg F.

6. Color: White.

2.7 SEALANTS

A. Materials are as recommended by the insulation manufacturer and are compatible with insulation materials, jackets, and substrates.

B. Joint Sealants:

1. Manufacturers: Subject to compliance with requirements, provide products by one of the following:

   a. Childers Brand; H. B. Fuller Construction Products.
   b. Foster Brand; H. B. Fuller Construction Products.
   c. Owens Corning.

2. Permanently flexible, elastomeric sealant.
3. Service Temperature Range: Minus 100 to plus 300 deg F.
4. Color: White or gray.
5. Verify sealant has a VOC content of 420 g/L or less.
6. Verify sealant complies with the testing and product requirements of the California Department of Public Health's "Standard Method for the Testing and Evaluation of Volatile Organic Chemical Emissions from Indoor Sources Using Environmental Chambers."

C. FSK and Metal Jacket Flashing Sealants:

1. Manufacturers: Subject to compliance with requirements, provide products by one of the following:

   a. Childers Brand; H. B. Fuller Construction Products.
   b. Foster Brand; H. B. Fuller Construction Products.

2. Fire- and water-resistant, flexible, elastomeric sealant.
3. Service Temperature Range: Minus 40 to plus 250 deg F.
4. Color: Aluminum.
5. Verify sealant has a VOC content of 420 g/L or less.
6. Verify sealant complies with the testing and product requirements of the California Department of Public Health's "Standard Method for the Testing and Evaluation of Volatile Organic Chemical Emissions from Indoor Sources Using Environmental Chambers."

D. ASJ Flashing Sealants and Vinyl, PVDC, and PVC Jacket Flashing Sealants:

1. Manufacturers: Subject to compliance with requirements, provide products by one of the following:

   a. Childers Brand; H. B. Fuller Construction Products.
   b. Foster Brand; H. B. Fuller Construction Products.

2. Fire- and water-resistant, flexible, elastomeric sealant.
3. Service Temperature Range: Minus 40 to plus 250 deg F.
4. Color: White.
5. Verify sealant has a VOC content of 420 g/L or less.

6. Verify sealant complies with the testing and product requirements of the California Department of Public Health's "Standard Method for the Testing and Evaluation of Volatile Organic Chemical Emissions from Indoor Sources Using Environmental Chambers."

2.8 FACTORY-APPLIED JACKETS

A. Insulation system schedules indicate factory-applied jackets on various applications. When factory-applied jackets are indicated, comply with the following:

1. ASJ: White, kraft-paper, fiberglass-reinforced scrim with aluminum-foil backing; complying with ASTM C1136, Type I.
2. ASJ-SSL: ASJ with self-sealing, pressure-sensitive, acrylic-based adhesive covered by a removable protective strip; complying with ASTM C1136, Type I.
3. FSK Jacket: Aluminum-foil, fiberglass-reinforced scrim with kraft-paper backing; complying with ASTM C1136, Type II.

2.9 FIELD-APPLIED JACKETS

A. Field-applied jackets comply with ASTM C1136, Type I, unless otherwise indicated.

B. FSK Jacket: Aluminum-foil-face, fiberglass-reinforced scrim with kraft-paper backing.

C. Metal Jacket:

1. Manufacturers: Subject to compliance with requirements, provide products by one of the following:

   a. Johns Manville; a Berkshire Hathaway company.
   b. RPR Products, Inc.

2. Aluminum Jacket: Comply with ASTM B209, Alloy 3003, 3005, 3105, or 5005, Temper H-14.

   a. Factory cut and rolled to size.
   b. Finish and thickness are indicated in field-applied jacket schedules.
   c. Moisture Barrier for Indoor Applications: 3-mil-thick, heat-bonded polyethylene and kraft paper.
   d. Moisture Barrier for Outdoor Applications: 3-mil-thick polysurlyn.
   e. Factory-Fabricated Fitting Covers:

      1) Same material, finish, and thickness as jacket.
      2) Preformed two-piece or gore, 45- and 90-degree, short- and long-radius elbows.
      3) Tee covers.
      4) Flange and union covers.
      5) End caps.
      6) Beveled collars.
      7) Valve covers.
      8) Field fabricate fitting covers only if factory-fabricated fitting covers are not available.

3. Stainless Steel Jacket: ASTM A240/A240M.

a. Factory cut and rolled to size.
b. Material, finish, and thickness are indicated in field-applied jacket schedules.
c. Moisture Barrier for Indoor Applications: 3-mil-thick, heat-bonded polyethylene and kraft paper.
d. Moisture Barrier for Outdoor Applications: 3-mil-thick polysurlyn.
e. Factory-Fabricated Fitting Covers:

1) Same material, finish, and thickness as jacket.
2) Preformed two-piece or gore, 45- and 90-degree, short- and long-radius elbows.
3) Tee covers.
4) Flange and union covers.
5) End caps.
6) Beveled collars.
7) Valve covers.
8) Field fabricate fitting covers only if factory-fabricated fitting covers are not available.

D. Self-Adhesive Outdoor Jacket (Asphaltic): 60-mil-thick, laminated vapor barrier and waterproofing membrane for installation over insulation located aboveground outdoors; consisting of a rubberized bituminous resin on a cross-laminated polyethylene film covered with white aluminum-foil facing.

1. Manufacturers: Subject to compliance with requirements, provide products by one of the following:

a. MFM Building Products Corp.
b. Polyguard Products, Inc.

E. Self-Adhesive Indoor/Outdoor Jacket (Non-Asphaltic): Vapor barrier and waterproofing jacket for installation over insulation located aboveground outdoors or indoors. Specialized jacket has five layers of laminated aluminum and polyester film with low-temperature acrylic pressure-sensitive adhesive. Outer aluminum surface is coated with UV-resistant coating for protection from environmental contaminants.

1. Manufacturers: Subject to compliance with requirements, provide products by one of the following:

a. 3M.
b. Foster Brand; H. B. Fuller Construction Products.
c. Ideal Tape Co., Inc., an American Biltrite Company.

2. Permeance: 0.00 perm as tested in accordance with ASTM F1249.
3. Flamespread/Smoke Developed: 25/50 as tested in accordance with ASTM E84.
4. Aluminum Finish: Smooth.

2.10 FIELD-APPLIED FABRIC-REINFORCING MESH

A. Woven Glass-Fiber Mesh: Approximately 4 oz./sq. yd. with a thread count of 5 strands by 5 strands/sq. in. for covering equipment.

1. Manufacturers: Subject to compliance with requirements, provide products by one of the following:

a. Childers Brand; H. B. Fuller Construction Products.
b. Foster Brand; H. B. Fuller Construction Products.

B. Woven Polyester Mesh: Approximately 1 oz./sq. yd. with a thread count of 10 strands by 10 strands/sq. in., in a Leno weave, for equipment.

1. Manufacturers: Subject to compliance with requirements, provide products by one of the following:

a. Childers Brand; H. B. Fuller Construction Products.
b. Foster Brand; H. B. Fuller Construction Products.

2.11 FIELD-APPLIED CLOTHS

A. Woven Glass-Fiber Cloth: Comply with MIL-C-20079H, Type I, plain weave, and presized a minimum of 8 oz./sq. yd..

1. Manufacturers: Subject to compliance with requirements, provide products by the following:

a. Alpha Associates, Inc.

2.12 TAPES

A. ASJ Tape: White vapor-retarder tape matching factory-applied jacket with acrylic adhesive, complying with ASTM C1136.

1. Manufacturers: Subject to compliance with requirements, provide products by one of the following:

a. 3M Industrial Adhesives and Tapes Division.
b. Ideal Tape Co., Inc., an American Biltrite Company.
c. Knauf Insulation.

2. Width: 3 inches.
3. Thickness: 11.5 mils.
4. Adhesion: 90 ounces force/inch in width.
5. Elongation: 2 percent.
6. Tensile Strength: 40 lbf/inch in width.
7. ASJ Tape Disks and Squares: Precut disks or squares of ASJ tape.

B. FSK Tape: Foil-face, vapor-retarder tape matching factory-applied jacket with acrylic adhesive; complying with ASTM C1136.

1. Manufacturers: Subject to compliance with requirements, provide products by one of the following:

a. 3M Industrial Adhesives and Tapes Division.
b. Ideal Tape Co., Inc., an American Biltrite Company.
c. Knauf Insulation.

2. Width: 3 inches.
3. Thickness: 6.5 mils.
4. Adhesion: 90 ounces force/inch in width.
5. Elongation: 2 percent.

6. Tensile Strength: 40 lbf/inch in width.
7. FSK Tape Disks and Squares: Precut disks or squares of FSK tape.

C. Aluminum-Foil Tape: Vapor-retarder tape with acrylic adhesive.

1. Manufacturers: Subject to compliance with requirements, provide products by one of the following:

   a. 3M Industrial Adhesives and Tapes Division.
   b. Ideal Tape Co., Inc., an American Biltrite Company.
   c. Knauf Insulation.

2. Width: 2 inches.
3. Thickness: 3.7 mils.
4. Adhesion: 100 ounces force/inch in width.
5. Elongation: 5 percent.
6. Tensile Strength: 34 lbf/inch in width.

2.13 SECUREMENTS

A. Bands:

1. Manufacturers: Subject to compliance with requirements, provide products by one of the following:

   a. Johns Manville; a Berkshire Hathaway company.
   b. RPR Products, Inc.

2. Stainless Steel: ASTM A240/A240M, Type 304 or Type 316; 0.015-inch-thick, 1/2-inch-wide with wing seal or closed seal.
3. Aluminum: ASTM B209, Alloy 3003, 3005, 3105, or 5005; Temper H-14, 0.020-inch-thick, 1/2-inch-wide with wing seal or closed seal.
4. Springs: Twin spring set constructed of stainless steel with ends flat and slotted to accept metal bands. Spring size is determined by manufacturer for application.

B. Insulation Pins and Hangers:

1. Capacitor-Discharge-Weld Pins: Copper- or zinc-coated steel pin, fully annealed for capacitor-discharge welding; 0.106-inch-diameter shank, length to suit depth of insulation indicated.

   a. Manufacturers: Subject to compliance with requirements, provide products by one of the following:

      1) AGM Industries, Inc.
      2) Gemco.
      3) Midwest Fasteners, Inc.
      4) Nelson Stud Welding.

2. Cupped-Head, Capacitor-Discharge-Weld Pins: Copper- or zinc-coated steel pin, fully annealed for capacitor-discharge welding; 0.106-inch-diameter shank, length to suit depth of insulation indicated with integral 1-1/2-inch galvanized carbon-steel washer.

   a. Manufacturers: Subject to compliance with requirements, provide products by one of the following:

1) AGM Industries, Inc.
2) CL WARD & Family Inc.
3) Gemco.
4) Midwest Fasteners, Inc.

3. Metal, Adhesively Attached, Perforated-Base Insulation Hangers: Baseplate welded to projecting spindle that is capable of holding insulation, of thickness indicated, securely in position indicated when self-locking washer is in place.

   a. Manufacturers: Subject to compliance with requirements, provide products by one of the following:

      1) AGM Industries, Inc.
      2) Gemco.
      3) Midwest Fasteners, Inc.

   b. Baseplate: Perforated, galvanized carbon-steel sheet, 0.030-inch-thick by 2 inches square.
   c. Spindle: Copper- or zinc-coated, low-carbon steel, fully annealed, 0.106-inch-diameter shank; length to suit depth of insulation indicated.
   d. Adhesive: Recommended by hanger manufacturer. Use product with demonstrated capability to bond insulation hanger securely to substrates indicated without damaging insulation, hangers, and substrates.

4. Nonmetal, Adhesively Attached, Perforated-Base Insulation Hangers: Baseplate fastened to projecting spindle that is capable of holding insulation, of thickness indicated, securely in position indicated when self-locking washer is in place.

   a. Manufacturers: Subject to compliance with requirements, provide products by one of the following:

      1) Gemco.
      2) Midwest Fasteners, Inc.

   b. Baseplate: Perforated, nylon sheet, 0.030-inch-thick by 1-1/2 inches in diameter.
   c. Spindle: Nylon, 0.106-inch-diameter shank; length to suit depth of insulation indicated, up to 2-1/2 inches.
   d. Adhesive: Recommended by hanger manufacturer. Use product with demonstrated capability to bond insulation hanger securely to substrates indicated without damaging insulation, hangers, and substrates.

5. Self-Sticking-Base Insulation Hangers: Baseplate welded to projecting spindle that is capable of holding insulation, of thickness indicated, securely in position indicated when self-locking washer is in place.

   a. Manufacturers: Subject to compliance with requirements, provide products by one of the following:

      1) AGM Industries, Inc.
      2) Gemco.
      3) Midwest Fasteners, Inc.

   b. Baseplate: Galvanized carbon-steel sheet, 0.030-inch-thick by 2 inches square.
   c. Spindle: Copper- or zinc-coated, low-carbon steel, fully annealed; 0.106-inch-diameter shank; length to suit depth of insulation indicated.

d. Adhesive-backed base with a peel-off protective cover.

6. Insulation-Retaining Washers: Self-locking washers formed from 0.016-inch-thick, galvanized-steel sheet, with beveled edge sized as required to hold insulation securely in place but not less than 1-1/2 inches in diameter.

a. Manufacturers: Subject to compliance with requirements, provide products by one of the following:

1) AGM Industries, Inc.
2) Gemco.
3) Midwest Fasteners, Inc.
4) Nelson Stud Welding.

b. Protect ends with capped self-locking washers incorporating a spring steel insert to ensure permanent retention of cap in exposed locations.

7. Nonmetal Insulation-Retaining Washers: Self-locking washers formed from 0.016-inch-thick nylon sheet, with beveled edge sized as required to hold insulation securely in place but not less than 1-1/2 inches in diameter.

C. Staples: Outward-clinching insulation staples, nominal 3/4-inch-wide, stainless steel or Monel.

D. Wire: 0.062-inch soft-annealed, stainless steel.

1. Manufacturers: Subject to compliance with requirements, provide products by one of the following:

a. C & F Wire.
b. Johns Manville; a Berkshire Hathaway company.
c. RPR Products, Inc.

2.14 CORNER ANGLES

A. PVC Corner Angles: 30-mils-thick, minimum 1- by 1-inch PVC in accordance with ASTM D1784, Class 16354-C, white or color-coded to match adjacent surface.

B. Aluminum Corner Angles: 0.040-inch-thick, minimum 1- by 1-inch aluminum in accordance with ASTM B209, Alloy 3003, 3005, 3105, or 5005; Temper H-14.

C. Stainless Steel Corner Angles: 0.024-inch-thick, minimum 1- by 1-inch stainless steel in accordance with ASTM A240/A240M, Type 304 or Type 316.

PART 3 - EXECUTION

3.1 EXAMINATION

A. Examine substrates and conditions for compliance with requirements for installation tolerances and other conditions affecting performance of insulation application.

1. Verify that systems and equipment to be insulated have been tested and are free of defects.
2. Verify that surfaces to be insulated are clean and dry.

B. Proceed with installation only after unsatisfactory conditions have been corrected.

3.2 PREPARATION

A. Clean and dry surfaces to receive insulation. Remove materials that will adversely affect insulation application.

B. Coordinate insulation installation with the tradesman installing heat tracing. Comply with requirements for heat tracing that apply to insulation.

C. Mix insulating cements with clean potable water; if insulating cements are to be in contact with stainless steel surfaces, use demineralized water.

3.3 GENERAL INSTALLATION REQUIREMENTS

A. Install insulation materials, accessories, and finishes with smooth, straight, and even surfaces; free of voids throughout the length of equipment.

B. Install insulation materials, forms, vapor barriers or retarders, and jackets, of thicknesses required for each item of equipment, as specified in insulation system schedules.

C. Install accessories compatible with insulation materials and suitable for the service. Install accessories that do not corrode, compress, or otherwise damage insulation or jacket.

D. Install insulation with longitudinal seams at top and bottom of horizontal runs.

E. Install multiple layers of insulation with longitudinal and end seams staggered.

F. Keep insulation materials dry during storage, application, and finishing. Replace insulation materials that get wet during storage or in the installation process before being properly covered and sealed in accordance with the Contract Documents.

G. Install insulation with tight longitudinal seams and end joints. Bond seams and joints with adhesive recommended by insulation material manufacturer.

H. Install insulation with least number of joints practical.

I. Where vapor barrier is indicated, seal joints, seams, and penetrations in insulation at hangers, supports, anchors, and other projections with vapor-barrier mastic.

   1. Install insulation continuously through hangers and around anchor attachments.
   2. For insulation application where vapor barriers are indicated, extend insulation on anchor legs from point of attachment to supported item to point of attachment to structure. Taper and seal ends attached to structure with vapor-barrier mastic.
   3. Install insert materials and install insulation to tightly join the insert. Seal insulation to insulation inserts with adhesive or sealing compound recommended by insulation material manufacturer.
   4. Cover inserts with jacket material matching adjacent insulation. Install shields over jacket, arranged to protect jacket from tear or puncture by hanger, support, and shield.

J. Apply adhesives, mastics, and sealants at manufacturer's recommended coverage rate and wet and dry film thicknesses.

K. Install insulation with factory-applied jackets as follows:

1. Draw jacket tight and smooth, but not to the extent of creating wrinkles or areas of compression in the insulation.
2. Cover circumferential joints with 3-inch-wide strips, of same material as insulation jacket. Secure strips with adhesive and outward-clinching staples along both edges of strip, spaced 4 inches o.c.
3. Overlap jacket longitudinal seams at least 1-1/2 inches. Clean and dry surface to receive self-sealing lap. Staple laps with outward-clinching staples along edge at 2 inches o.c.
4. For below-ambient services, apply vapor-barrier mastic over staples.
5. Cover joints and seams with tape, in accordance with insulation material manufacturer's written instructions, to maintain vapor seal.
6. Where vapor barriers are indicated, apply vapor-barrier mastic on seams and joints.

L. Cut insulation in a manner to avoid compressing insulation.

M. Finish installation with systems at operating conditions. Repair joint separations and cracking due to thermal movement.

N. Repair damaged insulation facings by applying same facing material over damaged areas. Extend patches at least 4 inches beyond damaged areas. Adhere, staple, and seal patches in similar fashion to butt joints.

O. For above-ambient services, do not install insulation to the following:

1. Vibration-control devices.
2. Testing agency labels and stamps.
3. Nameplates and data plates.
4. Manholes.
5. Handholes.
6. Cleanouts.

3.4 INSTALLATION OF EQUIPMENT, TANK, AND VESSEL INSULATION

A. Glass-Fiber, Pipe and Tank Insulation Installation for Tanks and Vessels: Secure insulation with adhesive, anchor pins, and speed washers.

1. Apply adhesives in accordance with manufacturer's recommended coverage rates per unit area, for 100 percent coverage of tank and vessel surfaces.
2. Groove and score insulation materials to fit as closely as possible to equipment, including contours. Bevel insulation edges for cylindrical surfaces for tight joints. Stagger end joints.
3. Protect exposed corners with secured corner angles.
4. Install adhesively attached or self-sticking insulation hangers and speed washers on sides of tanks and vessels as follows:

   a. Do not weld anchor pins to ASME-labeled pressure vessels.
   b. Select insulation hangers and adhesive that are compatible with service temperature and with substrate.
   c. On tanks and vessels, maximum anchor-pin spacing is 3 inches from insulation end joints and 16 inches o.c. in both directions.
   d. Do not compress insulation during installation.
   e. Cut and miter insulation segments to fit curved sides and domed heads of tanks and vessels.

f. Impale insulation over anchor pins and attach speed washers.
g. Cut excess portion of pins extending beyond speed washers or bend parallel with insulation surface. Cover exposed pins and washers with tape matching insulation facing.

5. Secure each layer of insulation with stainless steel or aluminum bands. Select band material compatible with insulation materials.
6. Where insulation hangers on equipment and vessels are not permitted or practical and where insulation support rings are not provided, install a girdle network for securing insulation. Stretch prestressed aircraft cable around the diameter of vessel and make taut with clamps, turnbuckles, or breather springs. Place one circumferential girdle around equipment approximately 6 inches from each end. Install wire or cable between two circumferential girdles 12 inches o.c. Install a wire ring around each end and around outer periphery of center openings and stretch prestressed aircraft cable radially from the wire ring to nearest circumferential girdle. Install additional circumferential girdles along the body of equipment or tank at a minimum spacing of 48 inches o.c. Use this network for securing insulation with tie wire or bands.
7. Stagger joints between insulation layers at least 3 inches.
8. Install insulation in removable and replaceable segments on equipment access doors, manholes, handholes, and other elements that require frequent removal for service and inspection.
9. Bevel and seal insulation ends around manholes, handholes, ASME stamps, and nameplates.
10. For equipment with surface temperatures below ambient, apply mastic to open ends, joints, seams, breaks, and punctures in insulation.

B. Flexible Elastomeric Thermal Insulation Installation for Tanks and Vessels: Install insulation over entire surface of tanks and vessels.

1. Apply 100 percent coverage of adhesive to surface with manufacturer's recommended adhesive.
2. Seal longitudinal seams and end joints.

C. Insulation Installation on Pumps:

1. Fabricate metal boxes lined with insulation. Fit boxes around pumps and coincide box joints with splits in pump casings. Fabricate joints with outward bolted flanges. Bolt flanges on 6-inch centers, starting at corners. Install 3/8-inch-diameter fasteners with wing nuts. Alternatively, secure the box sections together using a field-adjustable latching mechanism.
2. Fabricate boxes from aluminum or stainless steel, at least 0.040 inch thick.
3. For below-ambient services, install a vapor barrier at seams, joints, and penetrations. Seal between flanges with replaceable gasket material to form a vapor barrier.

3.5 INSTALLATION OF FLEXIBLE ELASTOMERIC INSULATION

A. Install in accordance with manufacturer's written installation instructions and ASTM C1710.

B. Seal longitudinal seams and end joints with manufacturer's recommended adhesive to eliminate openings in insulation that allow passage of air to surface being insulated.

3.6 FIELD-APPLIED JACKET INSTALLATION

A. Where glass-cloth jackets are indicated, install directly over bare insulation or insulation with factory-applied jackets.

1. Draw jacket smooth and tight to surface with 2-inch overlap at seams and joints.
2. Embed glass cloth between two 0.062-inch-thick coats of lagging adhesive.
3. Completely encapsulate insulation with coating, leaving no exposed insulation.

B. Where FSK jackets are indicated, install as follows:

1. Draw jacket material smooth and tight.
2. Install lap or joint strips with same material as jacket.
3. Secure jacket to insulation with manufacturer's recommended adhesive.
4. Install jacket with 1-1/2-inch laps at longitudinal seams and 3-inch-wide joint strips at end joints.
5. Seal openings, punctures, and breaks in vapor-retarder jackets and exposed insulation with vapor-barrier mastic.

C. Where metal jackets are indicated, install with 2-inch overlap at longitudinal seams and end joints. Overlap longitudinal seams arranged to shed water. Seal end joints with weatherproof sealant recommended by insulation manufacturer. Secure jacket with stainless steel bands 12 inches o.c. and at end joints.

3.7 FINISHES

A. Equipment Insulation with ASJ, Glass-Cloth, or Other Paintable Jacket Material: Paint jacket with paint system identified below and as specified in Section 099113 "Exterior Painting" and Section 099123 "Interior Painting."

1. Flat Acrylic Finish: Two finish coats over a primer that is compatible with jacket material and finish coat paint. Add fungicidal agent to render fabric mildew proof.

a. Finish Coat Material: Interior, flat, latex-emulsion size.

B. Flexible Elastomeric Thermal Insulation: After adhesive has fully cured, apply two coats of insulation manufacturer's recommended protective coating.

C. Color: Final color as selected by Architect. Vary first and second coats to allow visual inspection of the completed Work.

D. Do not field paint aluminum or stainless-steel jackets.

3.8 FIELD QUALITY CONTROL

A. Manufacturer's Field Service: Engage a factory-authorized service representative to test and inspect components, assemblies, and equipment installations, including connections.

B. Tests and Inspections: Inspect field-insulated equipment, randomly selected by Architect, by removing field-applied jacket and insulation in layers in reverse order of their installation. Extent of inspection is limited to one location(s) for each type of equipment defined in "Indoor Equipment Insulation Schedule" and "Outdoor, Aboveground Equipment Insulation Schedule" articles. For large equipment, remove only a portion adequate to determine compliance.

C. All insulation applications will be considered defective if they do not pass tests and inspections.

D. Prepare test and inspection reports.

3.9 EQUIPMENT INSULATION SCHEDULE, GENERAL

A. Insulation conductivity and thickness per pipe size comply with schedules in this Section or with requirements of authorities having jurisdiction, whichever is more stringent.

B. Acceptable insulation materials and thicknesses are identified for each piping system and pipe size range. If more than one material is listed for a piping system, selection from materials is Contractor's option.

3.10 BREECHING INSULATION SCHEDULE

A. Round, exposed breeching and connector insulation is the following:

1. High-Temperature Glass-Fiber Blanket: 3 inches thick and 3 lb/cu. ft. nominal density.

B. Round, concealed breeching and connector insulation is the following:

1. High-Temperature Glass-Fiber Blanket: 3 inches thick and 3 lb/cu. ft. nominal density.

C. Rectangular, exposed breeching and connector insulation is one of the following:

1. High-Temperature Glass-Fiber Blanket: 3 inches thick and 3 lb/cu. ft. nominal density.
2. High-Temperature Glass-Fiber Board: 3 inches thick and 3 lb/cu. ft. nominal density.

D. Rectangular, concealed breeching and connector insulation is one of the following:

1. High-Temperature Glass-Fiber Blanket: 3 inches thick and 3 lb/cu. ft. nominal density.
2. High-Temperature Glass-Fiber Board: 3 inches thick and 3 lb/cu. ft. nominal density.

3.11 INDOOR EQUIPMENT INSULATION SCHEDULE

A. Insulate indoor and outdoor equipment that is not factory insulated.

B. Chillers: Insulate cold surfaces on chillers, including, but not limited to, evaporator bundles, condenser bundles, heat-recovery bundles, suction piping, compressor inlets, tube sheets, water boxes, and nozzles with one of the following:

1. Cellular Glass: 2 inches thick.
2. Flexible Elastomeric: 1 inch thick.
3. Glass-Fiber Board: 1 inch thick and 2 lb/cu. ft. nominal density.
4. Glass-Fiber Pipe and Tank: 1 inch thick.

C. Heat-exchanger (water-to-water for cooling service) insulation is one of the following:

1. Cellular Glass: 2 inches thick.
2. Flexible Elastomeric: 1 inch thick.
3. Glass-Fiber Blanket: 1 inch thick and 2 lb/cu. ft. nominal density.
4. Glass-Fiber Board: 1 inch thick and 2 lb/cu. ft. nominal density.

5. Glass-Fiber Pipe and Tank: 1 inch thick.

D. Heat-exchanger (water-to-water for heating service) insulation is one of the following:

1. Cellular Glass: 3 inches thick.
2. Glass-Fiber Blanket: 2 inches thick and 3 lb/cu. ft. nominal density.
3. Glass-Fiber Board: 2 inches thick and 3 lb/cu. ft. nominal density.
4. Glass-Fiber Pipe and Tank: 2 inches thick.

E. Steam-to-steam generator insulation is one of the following:

1. Cellular Glass: 3 inches thick.
2. Glass-Fiber Board: 2 inches thick and 3 lb/cu. ft. nominal density.
3. Glass-Fiber Pipe and Tank: 2 inches thick.

F. Steam-to-hot-water converter insulation is one of the following:

1. Cellular Glass: 3 inches thick.
2. Glass-Fiber Blanket: 2 inches thick and 3 lb/cu. ft. nominal density.
3. Glass-Fiber Board: 2 inches thick and 3 lb/cu. ft. nominal density.
4. Glass-Fiber Pipe and Tank: 2 inches thick.

G. Hot-water-to-steam converter insulation is one of the following:

1. Cellular Glass: 3 inches thick.
2. Glass-Fiber Blanket: 2 inches thick and 3 lb/cu. ft. nominal density.
3. Glass-Fiber Board: 2 inches thick and 3 lb/cu. ft. nominal density.
4. Glass-Fiber Pipe and Tank: 2 inches thick.

H. Chilled-water pump insulation is one of the following:

1. Cellular Glass: 3 inches thick.
2. Glass-Fiber Board: 2 inches thick and 2lb/cu. ft. nominal density.

I. Condenser-water pump insulation is one of the following:

1. Cellular Glass: 2 inches thick.
2. Glass-Fiber Board: 1 inch thick and 2 lb/cu. ft. nominal density.

J. Dual-service heating and cooling pump insulation is one of the following:

1. Cellular Glass: 3 inches thick.
2. Glass-Fiber Board: 2 inches thick and 3 lb/cu. ft. nominal density.

K. Heating-hot-water pump insulation is one of the following:

1. Cellular Glass: 3 inches thick.
2. Glass-Fiber Board: 2 inches thick and 3 lb/cu. ft. nominal density.

L. Heat-recovery pump insulation is one of the following:

1. Cellular Glass: 3 inches thick.
2. Glass-Fiber Board: 2 inches thick and 3 lb/cu. ft. nominal density.

M. Steam condensate pump and boiler feedwater pump insulation is one of the following:

1. Cellular Glass: 3 inches thick.
2. Glass-Fiber Board: 2 inches thick and 3 lb/cu. ft. nominal density.
3. Glass-Fiber Pipe and Tank: 2 inches thick.

N. Chilled-water expansion/compression tank insulation is one of the following:

1. Cellular Glass: 3 inches thick.
2. Flexible Elastomeric: 1 inch thick.
3. Glass-Fiber Board: 2 inches thick and 2 lb/cu. ft. nominal density.
4. Glass-Fiber Pipe and Tank: 2 inches thick.

O. Condenser-water expansion/compression tank insulation is one of the following:

1. Cellular Glass: 2 inches thick.
2. Flexible Elastomeric: 1 inch thick.
3. Glass-Fiber Board: 1 inch thick and 2 lb/cu. ft. nominal density.
4. Glass-Fiber Pipe and Tank: 1 inch thick.

P. Dual-service heating and cooling expansion/compression tank insulation is one of the following:

1. Cellular Glass: 2 inches thick.
2. Flexible Elastomeric: 1 inch thick.
3. Glass-Fiber Board: 2-inch-thick and 3 lb/cu. ft. nominal density.
4. Glass-Fiber Pipe and Tank: 2 inches thick.

Q. Heating-hot-water expansion/compression tank insulation is one of the following:

1. Cellular Glass: 2 inches thick.
2. Glass-Fiber Board: 2 inches thick and 3 lb/cu. ft. nominal density.
3. Glass-Fiber Pipe and Tank: 2 inches thick.

R. Heat-recovery expansion/compression tank insulation is one of the following:

1. Cellular Glass: 2 inches thick.
2. Flexible Elastomeric: 1 inch thick.
3. Glass-Fiber Board: 1 inch thick and 2 lb/cu. ft. nominal density.
4. Glass-Fiber Pipe and Tank: 1 inch thick.

S. Chilled-water air-separator insulation is one of the following:

1. Cellular Glass: 2 inches thick.
2. Flexible Elastomeric: 1 inch thick.
3. Glass-Fiber Board: 2 inches thick and 2 lb/cu. ft. nominal density.
4. Glass-Fiber Pipe and Tank: 2 inches thick.

T. Condenser-water air-separator insulation is one of the following:

1. Cellular Glass: 2 inches thick.
2. Flexible Elastomeric: 1 inch thick.
3. Glass-Fiber Board: 1 inch thick and 2 lb/cu. ft. nominal density.
4. Glass-Fiber Pipe and Tank: 1 inch thick.

U. Dual-service heating and cooling air-separator insulation is one of the following:

1. Cellular Glass: 2 inches thick.

2. Flexible Elastomeric: 1 inch thick.

V. Heating-hot-water air-separator insulation is one of the following:

1. Cellular Glass: 3 inches thick.
2. Glass-Fiber Board: 2 inches thick and 3 lb/cu. ft. nominal density.
3. Glass-Fiber Pipe and Tank: 2 inches thick.

W. Heat-recovery air-separator insulation is one of the following:

1. Cellular Glass: 2 inches thick.
2. Flexible Elastomeric: 1 inch thick.
3. Glass-Fiber Board: 1 inch thick and 2 lb/cu. ft. nominal density.
4. Glass-Fiber Pipe and Tank: 1 inch thick.

X. Thermal storage tank (brine, water, ice) insulation is one of the following:

1. Cellular Glass: 4 inches thick.
2. Glass-Fiber Board: 3 inches thick and 3 lb/cu. ft. nominal density.
3. Glass-Fiber Pipe and Tank: 3 inches thick.

Y. Deaerator insulation is one of the following:

1. Cellular Glass: 3 inches thick.
2. Glass-Fiber Board: 3 inches thick and 3 lb/cu. ft. nominal density.
3. Glass-Fiber Pipe and Tank: 3 inches thick.

Z. Steam condensate tank and receiver insulation is one of the following:

1. Cellular Glass: 3 inches thick.
2. Glass-Fiber Board: 2 inches thick and 3 lb/cu. ft. nominal density.
3. Glass-Fiber Pipe and Tank: 2 inches thick.

AA. Steam flash-tank, flash-separator, moisture-separator, and blow-off-tank insulation is one of the following:

1. Cellular Glass: 3 inches thick.
2. Glass-Fiber Board: 2 inches thick and 3 lb/cu. ft. nominal density.
3. Glass-Fiber Pipe and Tank: 2 inches thick.

BB. Piping system filter-housing insulation is one of the following:

1. Cellular Glass: 3 inches thick.
2. Glass-Fiber Board: 2 inches thick and 3 lb/cu. ft. nominal density.
3. Glass-Fiber Pipe and Tank: 2 inches thick.

3.12 OUTDOOR, ABOVEGROUND EQUIPMENT INSULATION SCHEDULE

A. Retain "one of" option in paragraph below to allow Contractor to select materials from those retained. Heated, fuel-oil storage tank insulation is one of the following:

1. Cellular Glass: 3 inches thick.
2. Glass-Fiber Board: 2 inches thick and 3 lb/cu. ft. nominal density.
3. Glass-Fiber Pipe and Tank: 2 inches thick.

3.13 INDOOR, FIELD-APPLIED JACKET SCHEDULE

A. Install jacket over insulation material. For insulation with factory-applied jacket, install the field-applied jacket over the factory-applied jacket.

B. If more than one material is listed, selection from materials listed is Contractor's option.

C. Equipment, Concealed:

1. Aluminum, Smooth: 0.020 inch thick.
2. Stainless Steel, Type 304, or Type 316, Smooth No. 2B Finish: 0.020 inch thick.

D. Equipment, Exposed, up to 48 Inches in Diameter or with Flat Surfaces of up to 72 Inches:

1. Aluminum, Smooth: 0.020 inch thick.
2. Stainless Steel, Type 304, or Type 316, Smooth No. 2B Finish: 0.020 inch thick.

E. Equipment, Exposed, Larger Than 48 Inches in Diameter or with Flat Surfaces Larger Than 72 Inches:

1. Aluminum, Smooth: 0.032 inch thick.
2. Stainless Steel, Type 304, or Type 316, Smooth, with: 0.020 inch thick.

3.14 OUTDOOR, FIELD-APPLIED JACKET SCHEDULE

A. Install jacket over insulation material. For insulation with factory-applied jacket, install the field-applied jacket over the factory-applied jacket.

B. If more than one material is listed, selection from materials listed is Contractor's option.

C. Equipment, Concealed:

1. Aluminum, Smooth: 0.020 inch thick.
2. Stainless Steel, Type 304, or Type 316, Smooth No. 2B Finish: 0.016 inch thick.

D. Equipment, Exposed, up to 48 Inches in Diameter or with Flat Surfaces of up to 72 Inches:

1. Aluminum, Smooth with Z-Shaped Locking Seam: 0.020 inch thick.
2. Stainless Steel, Type 304 or Type 316, Smooth No. 2B Finish with Z-Shaped Locking Seam: 0.016 inch thick.

E. Equipment, Exposed, Larger Than 48 Inches in Diameter or with Flat Surfaces Larger Than 72 Inches:

1. Aluminum, Smooth with Z-Shaped Locking Seam: 0.020 inch thick.
2. Stainless Steel, Type 304 or Type 316, Smooth No. 2B Finish with Z-Shaped Locking Seam: 0.016 inch thick.

END OF SECTION 23 07 16

SECTION 23 07 19 - HVAC PIPING INSULATION

PART 1 - GENERAL

1.1 SUMMARY

A. Section includes insulation for HVAC piping systems.

B. Related Requirements:

1. Section 230713 "Duct Insulation" for duct insulation.
2. Section 230716 "HVAC Equipment Insulation" for equipment insulation.
3. Section 232113.13 "Underground Hydronic Piping" loose-fill pipe insulation in underground piping outside the building.
4. Section 232213.13 "Underground Steam and Condensate Heating Piping" for steam and condensate piping for steam-type tank heaters.

1.2 ACTION SUBMITTALS

A. Product Data: For each type of product. Include thermal conductivity, water-vapor permeance thickness, and jackets (both factory and field applied, if any).

B. Sustainable Design Submittals:

1. Product Data: For adhesives, mastics, and sealants, indicating VOC content.
2. Laboratory Test Reports: For adhesives, mastics, and sealants, indicating compliance with requirements for low-emitting materials.

C. Shop Drawings: Include plans, elevations, sections, details, and attachments to other work.

1. Detail application of protective shields, saddles, and inserts at hangers for each type of insulation and hanger.
2. Detail attachment and covering of heat tracing inside insulation.
3. Detail insulation application at pipe expansion joints for each type of insulation.
4. Detail insulation application at elbows, fittings, flanges, valves, and specialties for each type of insulation.
5. Detail removable insulation at piping specialties.
6. Detail application of field-applied jackets.
7. Detail application at linkages of control devices.

D. Samples: For each type of insulation and jacket indicated. Identify each Sample, describing product and intended use.

1. Preformed Pipe Insulation Materials: 12 inches long by NPS 2.
2. Sheet Form Insulation Materials: 12 inches square.
3. Jacket Materials for Pipe: 12 inches long by NPS 2.
4. Sheet Jacket Materials: 12 inches square.
5. Manufacturer's Color Charts: For products where color is specified, show the full range of colors available for each type of finish material.

1.3 INFORMATIONAL SUBMITTALS

A. Qualification Data: For qualified Installer.

B. Material Test Reports: From a qualified testing agency acceptable to authorities having jurisdiction indicating, interpreting, and certifying test results for compliance of insulation materials, sealers, attachments, cements, and jackets, with requirements indicated. Include dates of tests and test methods employed.

C. Field quality-control reports.

1.4 QUALITY ASSURANCE

A. Installer Qualifications: Skilled mechanics who have successfully completed an apprenticeship program or craft training program.

B. Mockups: Before installing insulation, build mockups for each type of insulation and finish listed below to demonstrate quality of insulation application and finishes. Build mockups in the location indicated or, if not indicated, as directed by Architect. Use materials indicated for the completed Work.

1. Piping Mockups:

   a. One 10-foot section of NPS 2 straight pipe.
   b. One each of a 90-degree threaded, welded, and flanged elbow.
   c. One each of a threaded, welded, and flanged tee fitting.
   d. One NPS 2 or smaller valve and one NPS 2-1/2 or larger valve.
   e. Four support hangers, including hanger shield and insert.
   f. One threaded strainer and one flanged strainer with removable portion of insulation.
   g. One threaded reducer and one welded reducer.
   h. One pressure temperature tap.
   i. One mechanical coupling.
   j. One union.

2. For each mockup, fabricate cutaway sections to allow observation of application details for insulation materials, adhesives, mastics, attachments, and jackets.
3. Notify Architect seven days in advance of dates and times when mockups will be constructed.
4. Obtain Architect's approval of mockups before starting insulation application.
5. Approval of mockups does not constitute approval of deviations from the Contract Documents contained in mockups unless Architect specifically approves such deviations in writing.
6. Maintain mockups during construction in an undisturbed condition as a standard for judging the completed Work.
7. Demolish and remove mockups when directed.

1.5 DELIVERY, STORAGE, AND HANDLING

A. Packaging: Insulation system materials are to be delivered to the Project site in unopened containers. The packaging is to include name of manufacturer, fabricator, type, description, and size, as well as ASTM standard designation, and maximum use temperature.

1.6 COORDINATION

A. Coordinate sizes and locations of supports, hangers, and insulation shields specified in Section 230529 "Hangers and Supports for HVAC Piping and Equipment."

B. Coordinate clearance requirements with piping Installer for piping insulation application. Before preparing piping Shop Drawings, establish and maintain clearance requirements for installation of insulation and field-applied jackets and finishes and for space required for maintenance.

C. Coordinate installation and testing of heat tracing.

1.7 SCHEDULING

A. Schedule insulation application after pressure testing systems and, where required, after installing and testing heat tracing. Insulation application may begin on segments that have satisfactory test results.

PART 2 - PRODUCTS

2.1 PERFORMANCE REQUIREMENTS

A. Surface-Burning Characteristics: For insulation and related materials, as determined by testing identical products in accordance with ASTM E84 by a testing agency acceptable to authority having jurisdiction. Factory label insulation, jacket materials, adhesive, mastic, tapes, and cement material containers with appropriate markings of applicable testing agency.

1. All Insulation Installed Indoors and Outdoors: Flame-spread index of 25 or less, and smoke-developed index of 50 or less.

2.2 INSULATION MATERIALS

A. Comply with requirements in "Piping Insulation Schedule, General," "Indoor Piping Insulation Schedule," "Outdoor, Aboveground Piping Insulation Schedule," and "Outdoor, Underground Piping Insulation Schedule" articles for where insulating materials are applied.

B. Products do not contain asbestos, lead, mercury, or mercury compounds.

C. Products that come into contact with stainless steel have a leachable chloride content of less than 50 ppm when tested in accordance with ASTM C871.

D. Insulation materials for use on austenitic stainless steel are qualified as acceptable in accordance with ASTM C795.

E. Foam insulation materials do not use CFC or HCFC blowing agents in the manufacturing process.

F. Calcium Silicate: Preformed Pipe Sections: Flat-, curved-, and grooved-block sections of noncombustible, inorganic, hydrous calcium silicate with a non-asbestos fibrous reinforcement. Comply with ASTM C533, Type I.

1. Prefabricated Fitting Covers: Comply with ASTM C450 and ASTM C585 for dimensions used in preforming insulation to cover valves, elbows, tees, and flanges.

    a. Manufacturers: Subject to compliance with requirements, available manufacturers offering products that may be incorporated into the Work include, but are not limited to the following:

        1) Johns Manville; a Berkshire Hathaway company.

G. Cellular Glass: Inorganic, incombustible, foamed or cellulated glass with annealed, rigid, hermetically sealed cells. Comply with ASTM C552.

1. Manufacturers: Subject to compliance with requirements, available manufacturers offering products that may be incorporated into the Work include, but are not limited to the following:

    a. Owens Corning.

2. Preformed Pipe Insulation without Jacket: Type II, Class 1, unfaced.
3. Preformed Pipe Insulation with Jacket: Type II, Class 2, with factory-applied ASJ-SSL jacket.
4. Fabricated shapes in accordance with ASTM C450, ASTM C585, and ASTM C1639.
5. Factory-applied jacket requirements are specified in "Factory-Applied Jackets" Article.

H. Flexible Elastomeric: Closed-cell or expanded-rubber materials; suitable for maximum use temperature between minus 70 deg F and 220 deg F. Comply with ASTM C534/C534M, Type I, for tubular materials, Type II for sheet materials.

1. Manufacturers: Subject to compliance with requirements, provide products by one of the following:

    a. Aeroflex USA.
    b. Armacell LLC.
    c. K-Flex USA.

I. Glass-Fiber, Preformed Pipe: Glass fibers bonded with a thermosetting resin; suitable for maximum use temperature up to 850 deg F in accordance with ASTM C411. Comply with ASTM C547.

1. Manufacturers: Subject to compliance with requirements, provide products by one of the following:

    a. Johns Manville; a Berkshire Hathaway company.
    b. Knauf Insulation.
    c. Manson Insulation Inc.
    d. Owens Corning.

2. Preformed Pipe Insulation: Type I, Grade A with factory-applied ASJ with factory-applied ASJ-SSL.
3. Fabricated shapes in accordance with ASTM C450 and ASTM C585.
4. Factory-applied jacket requirements are specified in "Factory-Applied Jackets" Article.

J. Mineral Wool, Preformed Pipe: Mandrel-wound mineral wool fibers bonded with a thermosetting resin, unfaced; suitable for maximum use temperature up to 1200 deg F in accordance with ASTM C447. Comply with ASTM C547.

1. Manufacturers: Subject to compliance with requirements, provide products by the following:

   a. Johns Manville; a Berkshire Hathaway company.
   b. Owens Corning.
   c. ROCKWOOL Technical Insulation.
2. Preformed Pipe Insulation: Type II, Grade A with factory-applied ASJ-SSL.
3. Fabricated shapes in accordance with ASTM C450 and ASTM C585.

K. Glass-Fiber, Pipe and Tank: Glass fibers bonded with a thermosetting resin; suitable for maximum use temperature between 35 deg F and 850 deg F, in accordance with ASTM C411. Comply with ASTM C1393.

1. Manufacturers: Subject to compliance with requirements, provide products by one of the following:

   a. Certainteed; SAINT-GOBAIN.
   b. Johns Manville; a Berkshire Hathaway company.
   c. Knauf Insulation.
   d. Manson Insulation Inc.
   e. Owens Corning.

2. Semirigid board material with factory-applied ASJ+ jacket.
3. Factory-applied jacket requirements are specified in "Factory-Applied Jackets" Article.

L. Mineral Wool, Pipe and Tank: Mineral wool fibers bonded with a thermosetting resin; suitable for maximum use temperature up to 1000 deg F, in accordance with ASTM C411. Comply with ASTM C1393.

1. Manufacturers: Subject to compliance with requirements, provide products by the following provide products by one of the following:

   a. Johns Manville; a Berkshire Hathaway company.
   b. Owens Corning.
   c. ROCKWOOL.

2. Semirigid board material with factory-applied ASJ+ jacket.
3. Factory-applied jacket requirements are specified in "Factory-Applied Jackets" Article.

M. Polyolefin: Polyethylene thermal plastic insulation. Comply with ASTM C1427, Type I, Grade 1, for tubular materials and with Type II, Grade 1, for sheet materials[, self-seal].

1. Manufacturers: Subject to compliance with requirements, provide products by one of the following:

   a. Armacell LLC.
   b. Sekisui Voltek, LLC.

2.3 INSULATING CEMENTS

A. Glass-Fiber and Mineral Wool Insulating Cement: Comply with ASTM C195.

1. Manufacturers: Subject to compliance with requirements, provide products by the following:

a. Ramco Insulation, Inc.

B. Glass-Fiber and Mineral Wool Hydraulic-Setting Insulating and Finishing Cement: Comply with ASTM C449.

1. Manufacturers: Subject to compliance with requirements, provide products by the following:

a. Ramco Insulation, Inc.

2.4 ADHESIVES

A. Materials are compatible with insulation materials, jackets, and substrates and for bonding insulation to itself and to surfaces to be insulated unless otherwise indicated.

B. Calcium Silicate Adhesive: Fibrous, sodium-silicate-based adhesive with a service temperature range of 50 to 800 deg F.

1. Manufacturers: Subject to compliance with requirements, provide products by the following:

a. Childers Brand; H. B. Fuller Construction Products.
b. Foster Brand; H. B. Fuller Construction Products.
c. Mon-Eco Industries, Inc.
d. Vimasco Corporation.

2. Adhesive: As recommended by calcium silicate manufacturer and with a VOC content of 50 g/L or less.
3. Verify adhesive complies with the testing and product requirements of the California Department of Public Health's "Standard Method for the Testing and Evaluation of Volatile Organic Chemical Emissions from Indoor Sources Using Environmental Chambers."

C. Cellular-Glass Adhesive: Two-component, thermosetting urethane adhesive containing no flammable solvents, with a service temperature range of minus 100 to plus 200 deg F.

1. Manufacturers: Subject to compliance with requirements, provide products by the following:

a. Foster Brand; H. B. Fuller Construction Products.

2. Adhesive: As recommended by cellular glass manufacturer and with a VOC content of 80 g/L or less.
3. Verify adhesive complies with the testing and product requirements of the California Department of Public Health's "Standard Method for the Testing and Evaluation of Volatile Organic Chemical Emissions from Indoor Sources Using Environmental Chambers."

D. Flexible Elastomeric and Polyolefin Adhesive: Solvent-based adhesive.

1. Manufacturers: Subject to compliance with requirements, provide products by one of the following:

a. Aeroflex USA.
b. Armacell LLC.

c. K-Flex USA.

2. Adhesive: As recommended by flexible elastomeric and polyolefin manufacturer and with a VOC content of 80 g/L or less.
3. Verify adhesive complies with the testing and product requirements of the California Department of Public Health's "Standard Method for the Testing and Evaluation of Volatile Organic Chemical Emissions from Indoor Sources Using Environmental Chambers."
4. Flame-spread index is 25 or less and smoke-developed index is 50 or less as tested in accordance with ASTM E84.
5. Wet Flash Point: Below 0 deg F.
6. Service Temperature Range: 40 to 200 deg F.
7. Color: Black.

E. Glass-Fiber and Mineral Wool Adhesive: Comply with MIL-A-3316C, Class 2, Grade A.

1. Manufacturers: Subject to compliance with requirements, provide products by one of the following:

a. Childers Brand; H. B. Fuller Construction Products.
b. Foster Brand; H. B. Fuller Construction Products.
c. Mon-Eco Industries, Inc.

2. Adhesive: As recommended by mineral fiber manufacturer and with a VOC content of 80 g/L or less.
3. Verify adhesive complies with the testing and product requirements of the California Department of Public Health's "Standard Method for the Testing and Evaluation of Volatile Organic Chemical Emissions from Indoor Sources Using Environmental Chambers."

F. ASJ Adhesive and FSK and PVDC Jacket Adhesive: Comply with MIL-A-3316C, Class 2, Grade A, for bonding insulation jacket lap seams and joints.

1. Manufacturers: Subject to compliance with requirements, provide products by one of the following:

a. Childers Brand; H. B. Fuller Construction Products.
b. Foster Brand; H. B. Fuller Construction Products.
c. Mon-Eco Industries, Inc.

2. Verify adhesives have a VOC content of 50 g/L or less.
3. Verify adhesive complies with the testing and product requirements of the California Department of Public Health's "Standard Method for the Testing and Evaluation of Volatile Organic Chemical Emissions from Indoor Sources Using Environmental Chambers."

G. PVC Jacket Adhesive: Compatible with PVC jacket.

1. Manufacturers: Subject to compliance with requirements, provide products by one of the following:

a. Johns Manville; a Berkshire Hathaway company.
b. P.I.C. Plastics, Inc.
c. Proto Corporation.
d. Speedline Corporation.

e. The Dow Chemical Company.

2. Adhesive: As recommended by Adhesive - PVC Jacket manufacturer and with a VOC content of 50 g/L or less.
3. Verify adhesive complies with the testing and product requirements of the California Department of Public Health's "Standard Method for the Testing and Evaluation of Volatile Organic Chemical Emissions from Indoor Sources Using Environmental Chambers."

2.5 MASTICS AND COATINGS

A. Materials are compatible with insulation materials, jackets, and substrates.

1. Mastics: As recommended by insulation manufacturer and with a VOC content of 50 g/L or less.
2. Verify mastics comply with the testing and product requirements of the California Department of Public Health's "Standard Method for the Testing and Evaluation of Volatile Organic Chemical Emissions from Indoor Sources Using Environmental Chambers."

B. Vapor-Retarder Mastic, Water Based: Suitable for indoor use on below-ambient services.

1. Manufacturers: Subject to compliance with requirements, provide products by one of the following:

a. Childers Brand; H. B. Fuller Construction Products.
b. Foster Brand; H. B. Fuller Construction Products.
c. Knauf Insulation.
d. Mon-Eco Industries, Inc.
e. Vimasco Corporation.

2. Water-Vapor Permeance: Comply with ASTM E96/E96M or ASTM F1249.
3. Service Temperature Range: 0 to plus 180 deg F.

C. Breather Mastic: Water based; suitable for indoor and outdoor use on above-ambient services.

1. Manufacturers: Subject to compliance with requirements, provide products by one of the following:

a. Childers Brand; H. B. Fuller Construction Products.
b. Foster Brand; H. B. Fuller Construction Products.
c. Knauf Insulation.
d. Mon-Eco Industries, Inc.
e. Vimasco Corporation.

2. Water-Vapor Permeance: ASTM E96/E96M, greater than 1.0 perm at manufacturer's recommended dry film thickness.
3. Service Temperature Range: 0 to plus 180 deg F.
4. Color: White.

2.6 LAGGING ADHESIVES

A. Adhesives comply with MIL-A-3316C, Class I, Grade A, and are compatible with insulation materials, jackets, and substrates.

1. Manufacturers: Subject to compliance with requirements, provide products by one of the following:

   a. Childers Brand; H. B. Fuller Construction Products.
   b. Foster Brand; H. B. Fuller Construction Products.
   c. Vimasco Corporation.
2. Verify adhesive is as recommended by insulation manufacturer and has a VOC content of 50 g/L or less.
3. Verify adhesive complies with the testing and product requirements of the California Department of Public Health's "Standard Method for the Testing and Evaluation of Volatile Organic Chemical Emissions from Indoor Sources Using Environmental Chambers."
4. Fire-resistant, water-based lagging adhesive and coating for use indoors to adhere fire-resistant lagging cloths over pipe insulation.
5. Service Temperature Range: 0 to plus 180 deg F.
6. Color: White.

2.7 SEALANTS

A. Materials are as recommended by the insulation manufacturer and are compatible with insulation materials, jackets, and substrates.

B. Joint Sealants:

1. Manufacturers: Subject to compliance with requirements, provide products by one of the following:

   a. Childers Brand; H. B. Fuller Construction Products.
   b. Foster Brand; H. B. Fuller Construction Products.
   c. Mon-Eco Industries, Inc.
   d. Owens Corning.

2. Permanently flexible, elastomeric sealant.

   a. Service Temperature Range: Minus 100 to plus 300 deg F.
   b. Color: White or gray.

3. Verify sealant has a VOC content of 420 g/L or less.
4. Verify sealant complies with the testing and product requirements of the California Department of Public Health's "Standard Method for the Testing and Evaluation of Volatile Organic Chemical Emissions from Indoor Sources Using Environmental Chambers."

C. FSK and Metal Jacket Flashing Sealants:

1. Manufacturers: Subject to compliance with requirements, provide products by one of the following:

   a. Childers Brand; H. B. Fuller Construction Products.

b. Foster Brand; H. B. Fuller Construction Products.
c. Mon-Eco Industries, Inc.

2. Fire- and water-resistant, flexible, elastomeric sealant.
3. Service Temperature Range: Minus 40 to plus 250 deg F.
4. Color: Aluminum.
5. Verify sealant has a VOC content of 420 g/L or less.
6. Verify sealant complies with the testing and product requirements of the California Department of Public Health's "Standard Method for the Testing and Evaluation of Volatile Organic Chemical Emissions from Indoor Sources Using Environmental Chambers."

D. ASJ Flashing Sealants and PVDC and PVC Jacket Flashing Sealants:

1. Manufacturers: Subject to compliance with requirements, provide products by one of the following:

a. Childers Brand; H. B. Fuller Construction Products.
b. Foster Brand; H. B. Fuller Construction Products.

2. Fire- and water-resistant, flexible, elastomeric sealant.
3. Service Temperature Range: Minus 40 to plus 250 deg F.
4. Color: White.
5. Verify sealant has a VOC content of 420 g/L or less.
6. Verify sealant complies with the testing and product requirements of the California Department of Public Health's "Standard Method for the Testing and Evaluation of Volatile Organic Chemical Emissions from Indoor Sources Using Environmental Chambers."

2.8 FACTORY-APPLIED JACKETS

A. Insulation system schedules indicate factory-applied jackets on various applications. When factory-applied jackets are indicated, comply with the following:

1. ASJ: White, kraft-paper, fiberglass-reinforced scrim with aluminum-foil backing; complying with ASTM C1136, Type I.
2. ASJ-SSL: ASJ with self-sealing, pressure-sensitive, acrylic-based adhesive covered by a removable protective strip; complying with ASTM C1136, Type I.
3. FSK Jacket: Aluminum-foil, fiberglass-reinforced scrim with kraft-paper backing; complying with ASTM C1136, Type II.
4. ASJ+: Aluminum foil reinforced with glass scrim bonded to a kraft paper interleaving with an outer film leaving no paper exposed; complying with ASTM C1136, Types I, II, III, IV, and VII.
5. PSK Jacket: Aluminum-foil, fiberglass-reinforced scrim with polyethylene backing; complying with ASTM C1136, Type II.

2.9 FIELD-APPLIED JACKETS

A. Field-applied jackets comply with ASTM C1136, Type I, unless otherwise indicated.

B. FSK Jacket: Aluminum-foil-face, fiberglass-reinforced scrim with kraft-paper backing.

C. PVC Jacket: High-impact-resistant, UV-resistant PVC complying with ASTM D1784, Class 16354-C; thickness as scheduled; roll stock ready for shop or field cutting and forming. Thickness is indicated in field-applied jacket schedules.

1. Manufacturers: Subject to compliance with requirements, provide products by one of the following:

   a. Airex Manufacturing.
   b. Johns Manville; a Berkshire Hathaway company.
   c. P.I.C. Plastics, Inc.
   d. Proto Corporation.
   e. Speedline Corporation.

2. Adhesive: As recommended by jacket material manufacturer.
3. Color: White.
4. Factory-fabricated fitting covers to match jacket if available; otherwise, field fabricate.

   a. Shapes: 45- and 90-degree, short- and long-radius elbows, tees, valves, flanges, unions, reducers, end caps, soil-pipe hubs, traps, mechanical joints, and P-trap and supply covers for lavatories.

D. Metal Jacket:

1. Manufacturers: Subject to compliance with requirements, provide products by one of the following:

   a. Johns Manville; a Berkshire Hathaway company.
   b. RPR Products, Inc.

2. Aluminum Jacket: Comply with ASTM B209, Alloy 3003, 3005, 3105, or 5005, Temper H-14.

   a. Factory cut and rolled to size.
   b. Finish and thickness are indicated in field-applied jacket schedules.
   c. Moisture Barrier for Indoor Applications: 1-mil-thick, heat-bonded polyethylene and kraft paper.
   d. Moisture Barrier for Outdoor Applications: 3-mil-thick, heat-bonded polyethylene and kraft paper.
   e. Factory-Fabricated Fitting Covers:

      1) Same material, finish, and thickness as jacket.
      2) Preformed two-piece or gore, 45- and 90-degree, short- and long-radius elbows.
      3) Tee covers.
      4) Flange and union covers.
      5) End caps.
      6) Beveled collars.
      7) Valve covers.
      8) Field fabricate fitting covers only if factory-fabricated fitting covers are not available.

3. Stainless Steel Jacket: ASTM A240/A240M.

   a. Factory cut and rolled to size.
   b. Material, finish, and thickness are indicated in field-applied jacket schedules.

c. Moisture Barrier for Indoor Applications: 1-mil-thick, heat-bonded polyethylene and kraft paper.
d. Moisture Barrier for Outdoor Applications: 3-mil-thick, heat-bonded polyethylene and kraft paper.
e. Factory-Fabricated Fitting Covers:

1) Same material, finish, and thickness as jacket.
2) Preformed two-piece or gore, 45- and 90-degree, short- and long-radius elbows.
3) Tee covers.
4) Flange and union covers.
5) End caps.
6) Beveled collars.
7) Valve covers.
8) Field fabricate fitting covers only if factory-fabricated fitting covers are not available.

E. Underground Direct-Buried Jacket: 125-mil-thick vapor barrier and waterproofing membrane, consisting of a rubberized bituminous resin reinforced with a woven-glass fiber or polyester scrim and laminated aluminum foil.

1. Manufacturers: Subject to compliance with requirements, provide products by one of the following:

a. Owens Corning.
b. Polyguard Products, Inc.

F. Self-Adhesive Outdoor Jacket (Asphaltic): 60-mil-thick, laminated vapor barrier and waterproofing membrane for installation over insulation located aboveground outdoors; consisting of a rubberized bituminous resin on a cross-laminated polyethylene film covered with white aluminum-foil facing.

1. Manufacturers: Subject to compliance with requirements, provide products by the following:

a. Polyguard Products, Inc.

G. Self-Adhesive Indoor/Outdoor Jacket (Non-Asphaltic): Vapor barrier and waterproofing jacket for installation over insulation located aboveground outdoors or indoors. Specialized jacket has five layers of laminated aluminum and polyester film with low-temperature acrylic pressure-sensitive adhesive. Outer aluminum surface is coated with UV-resistant coating for protection from environmental contaminants.

1. Manufacturers: Subject to compliance with requirements, provide products by one of the following:

a. 3M.
b. Foster Brand; H. B. Fuller Construction Products.
c. Ideal Tape Co., Inc., an American Biltrite Company.

2. Permeance: 0.00 perm as tested in accordance with ASTM F1249.
3. Flamespread/Smoke Developed: 25/50 as tested in accordance with ASTM E84.
4. Aluminum Finish: Smooth.

H. PVDC Jacket for Indoor Applications: 4-mil-thick, white PVDC biaxially oriented barrier film with a permeance at 0.02 perm when tested in accordance with ASTM E96/E96M and with a flame-spread index of 10 and a smoke-developed index of 20 when tested in accordance with ASTM E84.

1. Manufacturers: Subject to compliance with requirements, provide products by the following:

a. Johns Manville; a Berkshire Hathaway company.

I. PVDC Jacket for Outdoor Applications: 6-mil-thick, white PVDC biaxially oriented barrier film with a permeance at 0.01 perm when tested in accordance with ASTM E96/E96M and with a flame-spread index of 25 and a smoke-developed index of 50 when tested in accordance with ASTM E84.

1. Manufacturers: Subject to compliance with requirements, provide products by the following:

a. Johns Manville; a Berkshire Hathaway company.

J. PVDC-SSL Jacket: PVDC jacket with a self-sealing, pressure-sensitive, acrylic-based adhesive covered by a removable protective strip.

1. Manufacturers: Subject to compliance with requirements, provide products by the following:

a. Johns Manville; a Berkshire Hathaway company.

2.10 FIELD-APPLIED FABRIC REINFORCING MESH

A. Woven Glass-Fiber Mesh: Approximately 2 oz./sq. yd. with a thread count of 10 strands by 10 strands/sq. in. for covering pipe and pipe fittings.

1. Manufacturers: Subject to compliance with requirements, provide products by the following:

a. Childers Brand; H. B. Fuller Construction Products.

B. Woven Polyester Mesh: Approximately 1 oz./sq. yd. with a thread count of 10 strands by 10 strands/sq. in., in a Leno weave, for pipe.

1. Manufacturers: Subject to compliance with requirements, provide products by one of the following:

a. Childers Brand; H. B. Fuller Construction Products.
b. Foster Brand; H. B. Fuller Construction Products.
c. Vimasco Corporation.

2.11 FIELD-APPLIED CLOTHS

A. Woven Glass-Fiber Cloth: Comply with MIL-C-20079H, Type I, plain weave, and presized a minimum of 8 oz./sq. yd..

1. Manufacturers: Subject to compliance with requirements, provide products by the following:

a. Alpha Associates, Inc.

2.12 TAPES

A. ASJ Tape: White vapor-retarder tape matching factory-applied jacket with acrylic adhesive, complying with ASTM C1136.

1. Manufacturers: Subject to compliance with requirements, provide products by one of the following:

a. 3M Industrial Adhesives and Tapes Division.
b. Avery Dennison Corporation, Specialty Tapes Division.
c. Ideal Tape Co., Inc., an American Biltrite Company.
d. Knauf Insulation.

2. Width: 3 inches.
3. Thickness: 11.5 mils.
4. Adhesion: 90 ounces force/inch in width.
5. Elongation: 2 percent.
6. Tensile Strength: 40 lbf/inch in width.
7. ASJ Tape Disks and Squares: Precut disks or squares of ASJ tape.

B. FSK Tape: Foil-face, vapor-retarder tape matching factory-applied jacket with acrylic adhesive; complying with ASTM C1136.

1. Manufacturers: Subject to compliance with requirements, provide products by one of the following:

a. 3M Industrial Adhesives and Tapes Division.
b. Avery Dennison Corporation, Specialty Tapes Division.
c. Ideal Tape Co., Inc., an American Biltrite Company.
d. Knauf Insulation.

2. Width: 3 inches.
3. Thickness: 6.5 mils.
4. Adhesion: 90 ounces force/inch in width.
5. Elongation: 2 percent.
6. Tensile Strength: 40 lbf/inch in width.
7. FSK Tape Disks and Squares: Precut disks or squares of FSK tape.

C. PVC Tape: White vapor-retarder tape matching field-applied PVC jacket with acrylic adhesive; suitable for indoor and outdoor applications.

1. Manufacturers: Subject to compliance with requirements, provide products by one of the following:

a. 3M Industrial Adhesives and Tapes Division.
b. Ideal Tape Co., Inc., an American Biltrite Company.

2. Width: 2 inches.
3. Thickness: 6 mils.
4. Adhesion: 64 ounces force/inch in width.
5. Elongation: 500 percent.
6. Tensile Strength: 18 lbf/inch in width.

D. Aluminum-Foil Tape: Vapor-retarder tape with acrylic adhesive.

1. Manufacturers: Subject to compliance with requirements, provide products by one of the following:

   a. 3M Industrial Adhesives and Tapes Division.
   b. Avery Dennison Corporation, Specialty Tapes Division.
   c. Ideal Tape Co., Inc., an American Biltrite Company.
   d. Knauf Insulation.

2. Width: 2 inches.
3. Thickness: 3.7 mils.
4. Adhesion: 100 ounces force/inch in width.
5. Elongation: 5 percent.
6. Tensile Strength: 34 lbf/inch in width.

E. PVDC Tape for Indoor Applications: White vapor-retarder PVDC tape with acrylic adhesive.

1. Manufacturers: Subject to compliance with requirements, provide products by the following:

   a. Johns Manville; a Berkshire Hathaway company.

2. Width: 3 inches.
3. Film Thickness: 2 mils.
4. Adhesive Thickness: 1.5 mils.
5. Elongation at Break: 120 percent.
6. Tensile Strength: 20 psi in width.

F. PVDC Tape for Outdoor Applications: White vapor-retarder PVDC tape with acrylic adhesive.

1. Manufacturers: Subject to compliance with requirements, provide products by the following:

   a. Johns Manville; a Berkshire Hathaway company.

2. Width: 3 inches.
3. Film Thickness: 6 mils.
4. Adhesive Thickness: 1.5 mils.
5. Elongation at Break: 145 percent.
6. Tensile Strength: 55 psi in width.

2.13 SECUREMENTS

A. Bands:

1. Manufacturers: Subject to compliance with requirements, provide products by one of the following:

   a. Johns Manville; a Berkshire Hathaway company.
   b. RPR Products, Inc.

2. Stainless Steel: ASTM A240/A240M, Type 304 or Type 316; 0.015 inch thick, 1/2 inch wide with wing seal or closed seal.

3. Aluminum: ASTM B209, Alloy 3003, 3005, 3105, or 5005; Temper H-14, 0.020 inch thick, 1/2 inch wide with wing seal or closed seal.
4. Springs: Twin spring set constructed of stainless steel, with ends flat and slotted to accept metal bands. Spring size is determined by manufacturer for application.

B. Staples: Outward-clinching insulation staples, nominal 3/4 inch wide, stainless steel or Monel.

C. Wire: 0.062-inch soft-annealed, stainless steel.

1. Manufacturers: Subject to compliance with requirements, provide products by one of the following:

a. C & F Wire.
b. Johns Manville; a Berkshire Hathaway company.
c. RPR Products, Inc.

PART 3 - EXECUTION

3.1 EXAMINATION

A. Examine substrates and conditions for compliance with requirements for installation tolerances and other conditions affecting performance of insulation application.

1. Verify that systems to be insulated have been tested and are free of defects.
2. Verify that surfaces to be insulated are clean and dry.

B. Proceed with installation only after unsatisfactory conditions have been corrected.

3.2 PREPARATION

A. Clean and dry surfaces to receive insulation. Remove materials that will adversely affect insulation application.

B. Clean and prepare surfaces to be insulated. Before insulating, apply a corrosion coating to insulated surfaces as follows:

1. Stainless Steel: Coat 300 series stainless steel with an epoxy primer 5 mils thick and an epoxy finish 5 mils thick if operating in a temperature range between 140 and 300 deg F. Consult coating manufacturer for appropriate coating materials and application methods for operating temperature range.
2. Carbon Steel: Coat carbon steel operating at a service temperature of between 32 and 300 deg F with an epoxy coating. Consult coating manufacturer for appropriate coating materials and application methods for operating temperature range.

C. Coordinate insulation installation with the tradesman installing heat tracing. Comply with requirements for heat tracing that apply to insulation.

D. Mix insulating cements with clean potable water; if insulating cements are to be in contact with stainless steel surfaces, use demineralized water.

3.3 GENERAL INSTALLATION REQUIREMENTS

A. Install insulation materials, accessories, and finishes with smooth, straight, and even surfaces; free of voids throughout the length of piping, including fittings, valves, and specialties.

B. Install insulation materials, forms, vapor barriers or retarders, jackets, and of thicknesses required for each item of pipe system, as specified in insulation system schedules.

C. Install accessories compatible with insulation materials and suitable for the service. Install accessories that do not corrode, compress, or otherwise damage insulation or jacket.

D. Install insulation with longitudinal seams at top and bottom (12 o'clock and 6 o'clock positions) of horizontal runs.

E. Install multiple layers of insulation with longitudinal and end seams staggered.

F. Do not weld brackets, clips, or other attachment devices to piping, fittings, and specialties.

G. Keep insulation materials dry during storage, application, and finishing. Replace insulation materials that get wet during storage or in the installation process before being properly covered and sealed in accordance with the Contract Documents.

H. Install insulation with tight longitudinal seams and end joints. Bond seams and joints with adhesive recommended by insulation material manufacturer.

I. Install insulation with least number of joints practical.

J. Where vapor barrier is indicated, seal joints, seams, and penetrations in insulation at hangers, supports, anchors, and other projections with vapor-barrier mastic.

1. Install insulation continuously through hangers and around anchor attachments.
2. For insulation application where vapor barriers are indicated, extend insulation on anchor legs from point of attachment to supported item to point of attachment to structure. Taper and seal ends attached to structure with vapor-barrier mastic.
3. Install insert materials and insulation to tightly join the insert. Seal insulation to insulation inserts with adhesive or sealing compound recommended by insulation material manufacturer.
4. Cover inserts with jacket material matching adjacent pipe insulation. Install shields over jacket, arranged to protect jacket from tear or puncture by hanger, support, and shield.

K. Apply adhesives, mastics, and sealants at manufacturer's recommended coverage rate and wet and dry film thicknesses.

L. Install insulation with factory-applied jackets as follows:

1. Draw jacket tight and smooth, but not to the extent of creating wrinkles or areas of compression in the insulation.
2. Cover circumferential joints with 3-inch-wide strips, of same material as insulation jacket. Secure strips with adhesive and outward-clinching staples along both edges of strip, spaced 4 inches o.c.
3. Overlap jacket longitudinal seams at least 1-1/2 inches. Install insulation with longitudinal seams at bottom of pipe. Clean and dry surface to receive self-sealing lap. Staple laps with outward-clinching staples along edge at 2 inches o.c.
4. For below-ambient services, apply vapor-barrier mastic over staples.

5. Cover joints and seams with tape, in accordance with insulation material manufacturer's written instructions, to maintain vapor seal.
6. Where vapor barriers are indicated, apply vapor-barrier mastic on seams and joints and at ends adjacent to pipe flanges and fittings.

M. Cut insulation in a manner to avoid compressing insulation.

N. Finish installation with systems at operating conditions. Repair joint separations and cracking due to thermal movement.

O. Repair damaged insulation facings by applying same facing material over damaged areas. Extend patches at least 4 inches beyond damaged areas. Adhere, staple, and seal patches in similar fashion to butt joints.

P. For above-ambient services, do not install insulation to the following:

1. Vibration-control devices.
2. Testing agency labels and stamps.
3. Nameplates and data plates.

3.4 PENETRATIONS

A. Insulation Installation at Roof Penetrations: Install insulation continuously through roof penetrations.

1. Seal penetrations with flashing sealant.
2. For applications requiring only indoor insulation, terminate insulation above roof surface and seal with joint sealant. For applications requiring indoor and outdoor insulation, install insulation for outdoor applications tightly joined to indoor insulation ends. Seal joint with joint sealant.
3. Extend jacket of outdoor insulation outside roof flashing at least 2 inches below top of roof flashing.
4. Seal jacket to roof flashing with flashing sealant.

B. Insulation Installation at Underground Exterior Wall Penetrations: Terminate insulation flush with sleeve seal. Seal terminations with flashing sealant.

C. Insulation Installation at Aboveground Exterior Wall Penetrations: Install insulation continuously through wall penetrations.

1. Seal penetrations with flashing sealant.
2. For applications requiring only indoor insulation, terminate insulation inside wall surface and seal with joint sealant. For applications requiring indoor and outdoor insulation, install insulation for outdoor applications tightly joined to indoor insulation ends. Seal joint with joint sealant.
3. Extend jacket of outdoor insulation outside wall flashing and overlap wall flashing at least 2 inches.
4. Seal jacket to wall flashing with flashing sealant.

D. Insulation Installation at Interior Wall and Partition Penetrations (That Are Not Fire Rated): Install insulation continuously through walls and partitions.

E. Insulation Installation at Fire-Rated Wall and Partition Penetrations: Install insulation continuously through penetrations of fire-rated walls and partitions.

1. Comply with requirements in Section 078413 "Penetration Firestopping" for firestopping and fire-resistive joint sealers.

F. Insulation Installation at Floor Penetrations:

1. Pipe: Install insulation continuously through floor penetrations.
2. Seal penetrations through fire-rated assemblies. Comply with requirements in Section 078413 "Penetration Firestopping."

3.5 GENERAL PIPE INSULATION INSTALLATION

A. Requirements in this article generally apply to all insulation materials, except where more specific requirements are specified in various pipe insulation material installation articles below.

B. Insulation Installation on Fittings, Valves, Strainers, Flanges, Mechanical Couplings, and Unions:

1. Install insulation over fittings, valves, strainers, flanges, mechanical couplings, unions, and other specialties with continuous thermal and vapor-retarder integrity unless otherwise indicated.
2. Insulate pipe elbows using prefabricated fitting insulation made from same material and density as that of adjacent pipe insulation. Each piece is butted tightly against adjoining piece and bonded with adhesive. Fill joints, seams, voids, and irregular surfaces with insulating cement finished to a smooth, hard, and uniform contour that is uniform with adjoining pipe insulation.
3. Insulate tee fittings with prefabricated fitting insulation of same material and thickness as that used for adjacent pipe. Cut sectional pipe insulation to fit. Butt each section closely to the next and hold in place with tie wire. Bond pieces with adhesive.
4. Insulate valves using prefabricated fitting insulation of same material, density, and thickness as that used for adjacent pipe. Overlap adjoining pipe insulation by not less than 2 times the thickness of pipe insulation, or one pipe diameter, whichever is thicker. For valves, insulate up to and including the bonnets, valve stuffing-box studs, bolts, and nuts. Fill joints, seams, and irregular surfaces with insulating cement.
5. Insulate strainers using prefabricated fitting insulation of same material, density, and thickness as that used for adjacent pipe. Overlap adjoining pipe insulation by not less than 2 times the thickness of pipe insulation, or one pipe diameter, whichever is thicker. Fill joints, seams, and irregular surfaces with insulating cement. Insulate strainers, so strainer basket flange or plug can be easily removed and replaced without damaging the insulation and jacket. Provide a removable reusable insulation cover. For below-ambient services, provide a design that maintains vapor barrier.
6. Insulate flanges, mechanical couplings, and unions using a section of oversized preformed pipe insulation to fit. Overlap adjoining pipe insulation by not less than 2 times the thickness of pipe insulation, or one pipe diameter, whichever is thicker. Stencil or label the outside insulation jacket of each union with the word "union" matching size and color of pipe labels.
7. Cover segmented insulated surfaces with a layer of finishing cement and coat with a mastic. Install vapor-barrier mastic for below-ambient services and a breather mastic for above-ambient services. Reinforce the mastic with reinforcing mesh. Trowel the mastic to a smooth and well-shaped contour.
8. For services not specified to receive a field-applied jacket, except for flexible elastomeric and polyolefin, install fitted PVC cover over elbows, tees, strainers, valves, flanges, and unions. Terminate ends with PVC end caps. Tape PVC covers to adjoining insulation facing, using PVC tape.

C. Insulate instrument connections for thermometers, pressure gages, pressure temperature taps, test connections, flow meters, sensors, switches, and transmitters on insulated pipes. Shape insulation at these connections by tapering it to and around the connection with insulating cement and finish with finishing cement, mastic, and flashing sealant.

D. Install removable insulation covers. Installation conforms to the following:

1. Make removable flange and union insulation from sectional pipe insulation of same thickness as that on adjoining pipe. Install same insulation jacket as that of adjoining pipe insulation.
2. When flange and union covers are made from sectional pipe insulation, extend insulation from flanges or union at least 2 times the insulation thickness over adjacent pipe insulation on each side of flange or union. Secure flange cover in place with stainless steel or aluminum bands. Select band material compatible with insulation and jacket.
3. Construct removable valve insulation covers in same manner as for flanges, except divide the two-part section on the vertical center line of valve body.
4. When covers are made from block insulation, make two halves, each consisting of mitered blocks wired to stainless steel fabric. Secure this wire frame, with its attached insulation, to flanges with tie wire. Extend insulation at least 2 inches over adjacent pipe insulation on each side of valve. Fill space between flange or union cover and pipe insulation with insulating cement. Finish cover assembly with insulating cement applied in two coats. After first coat is dry, apply and trowel second coat to a smooth finish.
5. Unless a PVC jacket is indicated in field-applied jacket schedules, finish exposed surfaces with a metal jacket.

3.6 INSTALLATION OF CALCIUM SILICATE INSULATION

A. Insulation Installation on Straight Pipes and Tubes:

1. Secure single-layer insulation with stainless steel bands at 12-inch intervals, and tighten bands without deforming insulation materials.
2. Install two-layer insulation with joints tightly butted and staggered at least 3 inches. Secure inner layer with wire spaced at 12-inch intervals. Secure outer layer with stainless steel bands at 12-inch intervals.
3. Apply a skim coat of mineral-fiber, hydraulic-setting cement to insulation surface. When cement is dry, apply flood coat of lagging adhesive and press on one layer of glass cloth or tape. Overlap edges at least 1 inch. Apply finish coat of lagging adhesive over glass cloth or tape. Thin finish coat to achieve smooth, uniform finish.

B. Insulation Installation on Pipe Flanges:

1. Install prefabricated pipe insulation to outer diameter of pipe flange.
2. Make width of insulation section same as overall width of flange and bolts, plus twice the thickness of pipe insulation.
3. Fill voids between inner circumference of flange insulation and outer circumference of adjacent straight pipe segments with cut sections of block insulation of same material and thickness as that of pipe insulation. Where voids are difficult to fill with block insulation, fill the voids with a fibrous insulation material suitable for the specific operating temperature.
4. Finish flange insulation same as pipe insulation.

C. Insulation Installation on Pipe Fittings and Elbows:

1. Install prefabricated sections of same material as that of straight segments of pipe insulation when available. Secure according to manufacturer's written instructions.

2. When prefabricated insulation sections of insulation are not available, install mitered sections of calcium silicate insulation. Secure insulation materials with wire or bands.
3. Finish fittings insulation same as pipe insulation.

D. Insulation Installation on Valves and Pipe Specialties:

1. Install pipe insulation, quads, hex sections, or beveled lag segments, adhered together, of calcium silicate insulation to valve body. Arrange insulation to permit access to packing and to allow valve operation without disturbing insulation.
2. Install insulation to flanges as specified for flange insulation application.
3. Finish valve and specialty insulation same as pipe insulation.

3.7 INSTALLATION OF CELLULAR-GLASS INSULATION

A. Insulation Installation on Straight Pipes and Tubes:

1. Secure each layer of insulation to pipe with wire or bands, and tighten bands without deforming insulation materials.
2. Where vapor barriers are indicated, seal longitudinal seams, end joints, and protrusions with vapor-barrier mastic and joint sealant.
3. For insulation with jackets on above-ambient services, secure laps with outward-clinched staples at 6 inches o.c.
4. For insulation with jackets on below-ambient services, do not staple longitudinal tabs. Instead, secure tabs with additional adhesive, as recommended by insulation material manufacturer, and seal with vapor-barrier mastic and flashing sealant.

B. Insulation Installation on Pipe Flanges:

1. Install prefabricated pipe insulation to outer diameter of pipe flange.
2. Make width of insulation section same as overall width of flange and bolts, plus twice the thickness of pipe insulation.
3. Fill voids between inner circumference of flange insulation and outer circumference of adjacent straight pipe segments with cut sections of cellular-glass block insulation of same thickness as that of pipe insulation. Where voids are difficult to fill with block insulation, fill the voids with a fibrous insulation material suitable for the specific operating temperature.
4. Install jacket material with manufacturer's recommended adhesive, overlap seams at least 1 inch, and seal joints with flashing sealant.

C. Insulation Installation on Pipe Fittings and Elbows:

1. Install prefabricated sections of same material as that of straight segments of pipe insulation when available. Secure according to manufacturer's written instructions.
2. When preformed sections of insulation are not available, install mitered or routed sections of cellular-glass insulation. Secure insulation materials with wire or bands.

D. Insulation Installation on Valves and Pipe Specialties:

1. Install prefabricated sections of cellular-glass insulation to valve body.
2. Arrange insulation to permit access to packing and to allow valve operation without disturbing insulation.
3. Install insulation to flanges as specified for flange insulation application.

3.8 INSTALLATION OF FLEXIBLE ELASTOMERIC INSULATION

A. Seal longitudinal seams and end joints with manufacturer's recommended adhesive to eliminate openings in insulation that allow passage of air to surface being insulated.

B. Insulation Installation on Pipe Flanges:

1. Install pipe insulation to outer diameter of pipe flange.
2. Make width of insulation section same as overall width of flange and bolts, plus twice the thickness of pipe insulation.
3. Fill voids between inner circumference of flange insulation and outer circumference of adjacent straight pipe segments with cut sections of sheet insulation of same thickness as that of pipe insulation.
4. Secure insulation to flanges and seal seams with manufacturer's recommended adhesive to eliminate openings in insulation that allow passage of air to surface being insulated.

C. Insulation Installation on Pipe Fittings and Elbows:

1. Install sections of pipe insulation and miter if required in accordance with manufacturer's written instructions.
2. Secure insulation materials and seal seams with manufacturer's recommended adhesive to eliminate openings in insulation that allow passage of air to surface being insulated.

D. Insulation Installation on Valves and Pipe Specialties:

1. Install prefabricated valve covers manufactured of same material as that of pipe insulation when available.
2. When prefabricated valve covers are not available, install cut sections of pipe and sheet insulation to valve body. Arrange insulation to permit access to packing and to allow valve operation without disturbing insulation.
3. Install insulation to flanges as specified for flange insulation application.
4. Secure insulation to valves and specialties, and seal seams with manufacturer's recommended adhesive to eliminate openings in insulation that allow passage of air to surface being insulated.

3.9 INSTALLATION OF GLASS-FIBER AND MINERAL WOOL INSULATION

A. Insulation Installation on Straight Pipes and Tubes:

1. Secure each layer of preformed pipe insulation to pipe with wire or bands, and tighten bands without deforming insulation materials.
2. Where vapor barriers are indicated, seal longitudinal seams, end joints, and protrusions with vapor-barrier mastic and joint sealant.
3. For insulation with jackets on above-ambient surfaces, secure laps with outward-clinched staples at 6 inches o.c.
4. For insulation with jackets on below-ambient surfaces, do not staple longitudinal tabs. Instead, secure tabs with additional adhesive, as recommended by insulation material manufacturer, and seal with vapor-barrier mastic and flashing sealant.

B. Insulation Installation on Pipe Flanges:

1. Install prefabricated pipe insulation to outer diameter of pipe flange.
2. Make width of insulation section same as overall width of flange and bolts, plus twice the thickness of pipe insulation.

3. Fill voids between inner circumference of flange insulation and outer circumference of adjacent straight pipe segments with glass-fiber or mineral-wool blanket insulation.
4. Install jacket material with manufacturer's recommended adhesive, overlap seams at least 1 inch, and seal joints with flashing sealant.

C. Insulation Installation on Pipe Fittings and Elbows:

1. Install prefabricated sections of same material as that of straight segments of pipe insulation when available.
2. When preformed insulation elbows and fittings are not available, install mitered sections of pipe insulation, to a thickness equal to adjoining pipe insulation. Secure insulation materials with wire or bands.

D. Insulation Installation on Valves and Pipe Specialties:

1. Install prefabricated sections of same material as that of straight segments of pipe insulation when available.
2. When prefabricated sections are not available, install fabricated sections of pipe insulation to valve body.
3. Arrange insulation to permit access to packing and to allow valve operation without disturbing insulation.
4. Install insulation to flanges as specified for flange insulation application.

3.10 INSTALLATION OF POLYOLEFIN INSULATION

A. Insulation Installation on Straight Pipes and Tubes:

1. Seal split-tube longitudinal seams and end joints with manufacturer's recommended adhesive, or via self-seal mechanism to eliminate openings in insulation that allow passage of air to surface being insulated.

B. Insulation Installation on Pipe Flanges:

1. Install pipe insulation to outer diameter of pipe flange.
2. Make width of insulation section same as overall width of flange and bolts, plus twice the thickness of pipe insulation.
3. Fill voids between inner circumference of flange insulation and outer circumference of adjacent straight pipe segments with cut sections of polyolefin sheet insulation of same thickness as that of pipe insulation.
4. Secure insulation to flanges and seal seams with manufacturer's recommended adhesive to eliminate openings in insulation that allow passage of air to surface being insulated.

C. Insulation Installation on Pipe Fittings and Elbows:

1. Install mitered sections of polyolefin pipe insulation.
2. Secure insulation materials and seal seams with manufacturer's recommended adhesive to eliminate openings in insulation that allow passage of air to surface being insulated.

D. Insulation Installation on Valves and Pipe Specialties:

1. Install cut sections of polyolefin pipe and sheet insulation to valve body.
2. Arrange insulation to permit access to packing and to allow valve operation without disturbing insulation.
3. Install insulation to flanges as specified for flange insulation application.

4. Secure insulation to valves and specialties, and seal seams with manufacturer's recommended adhesive to eliminate openings in insulation that allow passage of air to surface being insulated.

3.11 INSTALLATION OF FIELD-APPLIED JACKETS

A. Where glass-cloth jackets are indicated, install directly over bare insulation or insulation with factory-applied jackets.

1. Draw jacket smooth and tight to surface with 2-inch overlap at seams and joints.
2. Embed glass cloth between two 0.062-inch-thick coats of lagging adhesive.
3. Completely encapsulate insulation with coating, leaving no exposed insulation.

B. Where FSK jackets are indicated, install as follows:

1. Draw jacket material smooth and tight.
2. Install lap or joint strips with same material as jacket.
3. Secure jacket to insulation with manufacturer's recommended adhesive.
4. Install jacket with 1-1/2-inch laps at longitudinal seams and 3-inch-wide joint strips at end joints.
5. Seal openings, punctures, and breaks in vapor-retarder jackets and exposed insulation with vapor-barrier mastic.

C. Where PVC jackets are indicated and for horizontal applications, install with 1-inch overlap at longitudinal seams and end joints. Seal with manufacturer's recommended adhesive.

1. Apply two continuous beads of adhesive to seams and joints, one bead under lap and the finish bead along seam and joint edge.

D. Where metal jackets are indicated, install with 2-inch overlap at longitudinal seams and end joints. Overlap longitudinal seams arranged to shed water. Seal end joints with weatherproof sealant recommended by insulation manufacturer. Secure jacket with stainless steel bands 12 inches o.c. and at end joints.

E. Where PVDC jackets are indicated, install as follows:

1. Apply three separate wraps of filament tape per insulation section to secure pipe insulation to pipe prior to installation of PVDC jacket.
2. Wrap presized jackets around individual pipe insulation sections, with one end overlapping the previously installed sheet. Install presized jacket with an approximate overlap at butt joint of 2 inches over the previous section. Adhere lap seal using adhesive or SSL, and then apply 1-1/4 circumferences of appropriate PVDC tape around overlapped butt joint.
3. Continuous jacket can be spiral-wrapped around a length of pipe insulation. Apply adhesive or PVDC tape at overlapped spiral edge. When electing to use adhesives, refer to manufacturer's written instructions for application of adhesives along this spiral edge to maintain a permanent bond.
4. Jacket can be wrapped in cigarette fashion along length of roll for insulation systems with an outer circumference of 33-1/2 inches or less. The 33-1/2-inch-circumference limit allows for 2-inch-overlap seal. Using the length of roll allows for longer sections of jacket to be installed at one time. Use adhesive on the lap seal. Visually inspect lap seal for "fishmouthing," and use PVDC tape along lap seal to secure joint.
5. Repair holes or tears in PVDC jacket by placing PVDC tape over the hole or tear and wrapping a minimum of 1-1/4 circumferences to avoid damage to tape edges.

3.12 FINISHES

A. Insulation with ASJ, Glass-Cloth, or Other Paintable Jacket Material: Paint jacket with paint system identified below and as specified in Section 099113 "Exterior Painting" and Section 099123 "Interior Painting."

1. Flat Acrylic Finish: Two finish coats over a primer that is compatible with jacket material and finish coat paint. Add fungicidal agent to render fabric mildew proof.

a. Finish Coat Material: Interior, flat, latex-emulsion size.

B. Flexible Elastomeric Thermal Insulation: After adhesive has fully cured, apply two coats of insulation manufacturer's recommended protective coating.

C. Color: Final color as selected by Architect. Vary first and second coats to allow visual inspection of the completed Work.

D. Do not field paint aluminum or stainless steel jackets.

3.13 FIELD QUALITY CONTROL

A. Manufacturer's Field Service: Engage a factory-authorized service representative to test and inspect components, assemblies, and equipment installations, including connections.

B. Tests and Inspections: Inspect pipe, fittings, strainers, and valves, randomly selected by Architect, by removing field-applied jacket and insulation in layers in reverse order of their installation. Extent of inspection is limited to three locations of straight pipe, three locations of threaded fittings, three locations of welded fittings, two locations of threaded strainers, two locations of welded strainers, three locations of threaded valves, and three locations of flanged valves for each pipe service defined in the "Piping Insulation Schedule, General" Article.

C. All insulation applications will be considered defective if they do not pass tests and inspections.

D. Prepare test and inspection reports.

3.14 PIPING INSULATION SCHEDULE, GENERAL

A. Insulation conductivity and thickness per pipe size comply with schedules in this Section or with requirements of authorities having jurisdiction, whichever is more stringent.

B. Acceptable preformed pipe and tubular insulation materials and thicknesses are identified for each piping system and pipe size range. If more than one material is listed for a piping system, selection from materials listed is Contractor's option.

C. Items Not Insulated: Unless otherwise indicated, do not install insulation on the following:

1. Chrome-plated pipes and fittings unless there is a potential for personnel injury.

3.15 INDOOR PIPING INSULATION SCHEDULE

A. Condensate and Equipment Drain Water below 60 Deg F:

1. All Pipe Sizes: Insulation is one of the following:

    a. Cellular Glass: 1-1/2 inches thick.
    b. Flexible Elastomeric: 1 inch thick.
    c. Glass-Fiber, Preformed Pipe Insulation, Type I: 1 inch thick.
    d. Mineral Wool, Preformed Pipe Insulation, Type II: 1 inch thick.
    e. Polyolefin: 1 inch thick.

B. Chilled Water and Brine, 40 Deg F and below:

1. NPS 3 and Smaller: Insulation is one of the following:

    a. Cellular Glass: 1-1/2 inches thick.
    b. Flexible Elastomeric: 1 inch thick.
    c. Glass-Fiber, Preformed Pipe Insulation, Type I: 1-1/2 inches thick.
    d. Mineral Wool, Preformed Pipe Insulation, Type II: 1-1/2 inches thick.
    e. Polyolefin: 1 inch thick.

2. NPS 4 to NPS 12 Insert pipe size range: Insulation is the following:

    a. Cellular Glass: 1-1/2inches thick.
    b. Flexible Elastomeric: 1-1/2 inches thick.
    c. Glass-Fiber, Preformed Pipe Insulation, Type I: 1-1/2 inches thick.
    d. Mineral Wool, Preformed Pipe Insulation, Type-II: 1-1/2 inches thick.

3. NPS 14 and Larger: Insulation is one of the following:

    a. Cellular Glass: 2 inches thick.
    b. Glass-Fiber, Preformed Pipe Insulation, Type I, or Pipe and Tank Insulation: 2 inches thick.
    c. Mineral Wool, Preformed Pipe Insulation, Type II, or Pipe and Tank Insulation: 2 inches thick.

C. Chilled Water and Brine, Above 40 Deg F:

1. NPS 12 and Smaller: Insulation is one of the following:

    a. Cellular Glass: 1-1/2 inches thick.
    b. Flexible Elastomeric: 1 inch thick.
    c. Glass-Fiber, Preformed Pipe Insulation, Type I: 1-1/2 inches thick.
    d. Mineral Wool, Preformed Pipe Insulation, Type II: 1-1/2 inches thick.
    e. Polyolefin: 1 inch thick.

2. NPS 14 and Larger: Insulation is one of the following:

    a. Cellular Glass: 2 inches thick.
    b. Glass-Fiber Preformed Pipe Insulation, Type I, or Pipe and Tank Insulation: 2 inches thick.
    c. Mineral Wool: Preformed Pipe Insulation, Type II or Pipe and Tank Insulation: 2 inches thick.

D. Condenser-Water Supply and Return:

1. NPS 12 and Smaller: Insulation is one of the following:

a. Cellular Glass: 1-1/2 inches thick.
b. Flexible Elastomeric: 1 inch thick.
c. Glass-Fiber, Preformed Pipe Insulation, Type I: 1-1/2 inches thick.
d. Mineral Wool, Preformed Pipe Insulation, Type II: 1-1/2 inches thick.
e. Polyolefin: 1 inch thick.

2. NPS 14 and Larger: Insulation is one of the following:

a. Cellular Glass: 2 inches thick.
b. Glass-Fiber, Preformed Pipe Insulation, Type I or Pipe and Tank Insulation: 2 inches thick.
c. Mineral Wool, Preformed Pipe Insulation, Type II or Pipe and Tank Insulation: 2 inches thick.

E. Heating-Hot-Water Supply and Return, 200 Deg F and Below:

1. NPS 12 and Smaller: Insulation is one of the following:

a. Cellular Glass: 1-1/2 inches thick.
b. Glass-Fiber, Preformed Pipe, Type I: 1-1/2 inches thick.
c. Mineral Wool, Preformed Pipe, Type II: 1-1/2 inches thick.

2. NPS 14 and Larger: Insulation is one of the following:

a. Cellular Glass: 2 inches thick.
b. Glass-Fiber, Preformed Pipe Insulation, Type I or Pipe and Tank Insulation: 2 inches thick.
c. Mineral Wool, Preformed Pipe Insulation, Type II or Pipe and Tank Insulation: 2 inches thick.

F. Heating-Hot-Water Supply and Return, Above 200 Deg F:

1. NPS 3/4 and Smaller: Insulation is one of the following:

a. Calcium Silicate: 2 inches thick.
b. Cellular Glass: 2 inches thick.
c. Glass-Fiber, Preformed Pipe Insulation, Type I: 2 inches thick.
d. Mineral Wool, Preformed Pipe Insulation, Type II: 2 inches thick.

2. NPS 1 and Larger: Insulation is one of the following:

a. Calcium Silicate: 3 inches thick.
b. Cellular Glass: 3 inches thick.
c. Glass-Fiber, Preformed Pipe, Type I: 3 inches thick.
d. Mineral Wool, Preformed Pipe, Type II: 3 inches thick.

G. Steam and Steam Condensate, Boiler Blowdown, Vents, Drains 350 Deg F and Below:

1. NPS 3/4 and Smaller: Insulation is one of the following:

a. Calcium Silicate: 2 inches thick.
b. Cellular Glass: 2 inches thick.
c. Glass-Fiber, Preformed Pipe Insulation, Type I: 2 inches thick.
d. Mineral Wool, Preformed Pipe Insulation, Type II: 2 inches thick.

2. NPS 1 and Larger: Insulation is one of the following:

   a. Calcium Silicate: 3 inches thick.
   b. Cellular Glass: 3 inches thick.
   c. Glass-Fiber, Preformed Pipe Insulation, Type I or Pipe and Tank Insulation: 3 inches thick.
   d. Mineral Wool, Preformed Pipe Insulation, Type II or Pipe and Tank Insulation: 3 inches thick.

H. Steam and Steam Condensate, Boiler Blowdown, Vents, Drains Above 350 Deg F:

1. NPS 3/4 and Smaller: Insulation is one of the following:

   a. Calcium Silicate: 3 inches thick.
   b. Cellular Glass: 3 inches thick.
   c. Glass-Fiber, Preformed Pipe Insulation, Type I: 3 inches thick.
   d. Mineral Wool, Preformed Pipe Insulation, Type II: 3 inches thick.

2. NPS 1 and Larger: Insulation is one of the following:

   a. Calcium Silicate: 3 inches thick.
   b. Cellular Glass: 3 inches thick.
   c. Glass-Fiber, Preformed Pipe Insulation, Type I or Pipe and Tank Insulation: 3 inches thick.
   d. Mineral Wool, Preformed Pipe Insulation, Type II or Pipe and Tank Insulation: 3 inches thick.

I. Refrigerant Suction and Hot-Gas Piping:

1. All Pipe Sizes: Insulation is one of the following:

   a. Cellular Glass: 1-1/2 inches thick.
   b. Flexible Elastomeric: 1 inch thick.
   c. Glass-Fiber, Preformed Pipe Insulation, Type I: 1 inch thick.
   d. Mineral Wool, Preformed Pipe Insulation, Type II: 1 inch thick.
   e. Polyolefin: 1 inch thick.

J. Refrigerant Suction and Hot-Gas Flexible Tubing:

1. All Pipe Sizes: Insulation is one of the following:

   a. Flexible Elastomeric: 2 inches thick.

K. Refrigerant Liquid Piping:

1. All Pipe Sizes: Insulation is one of the following:

   a. Cellular Glass: 1-1/2 inches thick.
   b. Flexible Elastomeric: 1 inch thick.
   c. Glass-Fiber, Preformed Pipe Insulation, Type I: 1 inch thick.
   d. Mineral Wool, Preformed Pipe Insulation, Type II: 1 inch thick.
   e. Polyolefin: 1 inch thick.

L. Dual-Service Heating and Cooling, 40 to 200 Deg F:

1. NPS 12 and Smaller: Insulation is one of the following:

   a. Cellular Glass: 1-1/2 inches thick.
   b. Flexible Elastomeric: 1 inch thick.
   c. Glass-Fiber, Preformed Pipe Insulation, Type I: 1-1/2 inches thick.
   d. Mineral Wool, Preformed Pipe Insulation, Type I: 1-1/2 inches thick.

2. NPS 14 and Larger: Insulation is one of the following:

   a. Cellular Glass: 2 inches thick.
   b. Mineral-Fiber, Preformed Pipe Insulation, Type I or Pipe and Tank Insulation: 2 inches thick.

M. Heat-Recovery Piping:

1. All Pipe Sizes: Insulation is one of the following:

   a. Cellular Glass: 1-1/2 inches thick.
   b. Flexible Elastomeric: 1 inch thick.
   c. Glass-Fiber, Preformed Pipe Insulation, Type I or Pipe and Tank Insulation: 1 inch thick.
   d. Mineral Wool, Preformed Pipe Insulation, Type II or Pipe and Tank Insulation: 1 inch thick.
   e. Polyolefin: 1 inch thick.

3.16 OUTDOOR, ABOVEGROUND PIPING INSULATION SCHEDULE

A. Chilled Water and Brine:

1. All Pipe Sizes: Insulation is one of the following:

   a. Cellular Glass: 3 inches thick.
   b. Flexible Elastomeric: 3 inches thick.
   c. Glass-Fiber, Preformed Pipe Insulation, Type I: 3 inches thick.
   d. Mineral Wool, Preformed Pipe Insulation, Type II: 3 inches thick.

B. Condenser-Water Supply and Return:

1. All Pipe Sizes: Insulation is one of the following:

   a. Cellular Glass: 2 inches thick.
   b. Flexible Elastomeric: 2 inches thick.
   c. Glass-Fiber, Preformed Pipe Insulation, Type I: 2 inches thick.
   d. Mineral Wool, Preformed Pipe Insulation, Type II: 2 inches thick.

C. Heating-Hot-Water Supply and Return, 200 Deg F and Below:

1. All Pipe Sizes: Insulation is one of the following:

   a. Cellular Glass: 3 inches thick.
   b. Glass-Fiber, Preformed Pipe Insulation, Type I: 2 inches thick.
   c. Mineral Wool, Preformed Pipe Insulation, Type II: 2 inches thick.

D. Heating-Hot-Water Supply and Return, Above 200 Deg F:

1. All Pipe Sizes: Insulation is one of the following:

    a. Calcium Silicate: 3 inches thick.
    b. Cellular Glass: 3 inches thick.
    c. Glass-Fiber, Preformed Pipe Insulation, Type I: 2 inches thick.
    d. Mineral Wool, Preformed Pipe Insulation, Type II: 2 inches thick.

E. Steam and Steam Condensate, 350 Deg F and Below:

1. All Pipe Sizes: Insulation is one of the following:

    a. Calcium Silicate: 4 inches thick.
    b. Cellular Glass: 4 inches thick.
    c. Glass-Fiber, Preformed Pipe Insulation, Type I: 3 inches thick.
    d. Mineral Wool, Preformed Pipe Insulation, Type II: 3 inches thick.

F. Steam and Steam Condensate, Above 350 Deg F:

1. All Pipe Sizes: Insulation is one of the following:

    a. Calcium Silicate: 5 inches thick.
    b. Cellular Glass: 5 inches thick.
    c. Glass-Fiber, Preformed Pipe Insulation, Type I: 4 inches thick.
    d. Mineral Wool, Preformed Pipe Insulation, Type II: 4 inches thick.

G. Refrigerant Suction and Hot-Gas Piping:

1. All Pipe Sizes: Insulation is one of the following:

    a. Cellular Glass: 2 inches thick.
    b. Flexible Elastomeric: 2 inches thick.
    c. Glass-Fiber, Preformed Pipe Insulation, Type I: 2 inches thick.
    d. Mineral Wool, Preformed Pipe Insulation, Type II: 2 inches thick.

H. Refrigerant Suction and Hot-Gas Flexible Tubing:

1. All Pipe Sizes: Insulation is the following:

    a. Flexible Elastomeric: 2 inches thick.

I. Refrigerant Liquid Piping:

1. All Pipe Sizes: Insulation is one of the following:

    a. Flexible Elastomeric: 1 inch thick.
    b. Polyolefin: 1 inch thick.

J. Heat-Recovery Piping:

1. All Pipe Sizes: Insulation is one of the following:

    a. Cellular Glass: 2 inches thick.
    b. Flexible Elastomeric: 2 inches thick.
    c. Glass-Fiber, Preformed Pipe Insulation, Type I: 2 inches thick.
    d. Mineral Wool, Preformed Pipe Insulation, Type II: 2 inches thick.

K. Dual-Service Heating and Cooling:

1. All Pipe Sizes: Insulation is one of the following:

a. Cellular Glass: 3 inches thick.
b. Glass-Fiber, Preformed Pipe Insulation, Type I: 2 inches thick.
c. Mineral Wool, Preformed Pipe Insulation, Type II: 2 inches thick.

L. Fuel Oil Piping, Heated:

1. All Pipe Sizes: Insulation is one of the following:

a. Cellular Glass: 2 inches thick.
b. Glass-Fiber, Preformed Pipe Insulation, Type I: 2 inches thick.
c. Mineral Wool, Preformed Pipe Insulation, Type II: 2 inches thick.

3.17 OUTDOOR, UNDERGROUND, PIPING INSULATION SCHEDULE

A. Insulation for belowground piping is specified in Section 232113.13 "Underground Hydronic Piping" and Section 232213.13 "Underground Steam and Condensate Heating Piping."

B. Chilled Water, All Sizes: Cellular glass, 2 inches thick.

C. Condenser-Water Supply and Return, All Sizes: Cellular glass, 2 inches thick.

D. Heating-Hot-Water Supply and Return, All Sizes, 200 Deg F and Below: Cellular glass, 3 inches thick.

E. Heating-Hot-Water Supply and Return, All Sizes, Above 200 Deg F:

1. Cellular Glass: 3 inches thick.

F. Steam and Steam Condensate, All Sizes, 350 Deg F and Below:

1. Cellular Glass: 4 inches thick.

G. Steam and Steam Condensate, All Sizes, Above 350 Deg F:

1. Cellular Glass: 5 inches thick.

H. Dual-Service Heating and Cooling, All Sizes, 40 to 200 Deg F: Cellular glass, 3 inches thick.

I. Fuel Oil Piping, All Sizes, Heated: Cellular glass, 2 inches thick.

3.18 INDOOR, FIELD-APPLIED JACKET SCHEDULE

A. Install jacket over insulation material. For insulation with factory-applied jacket, install the field-applied jacket over the factory-applied jacket.

B. If more than one material is listed, selection from materials listed is Contractor's option.

C. Piping, Concealed:

1. None.

D. Piping, Exposed:

1. None.

3.19 OUTDOOR, FIELD-APPLIED JACKET SCHEDULE

A. Install jacket over insulation material. For insulation with factory-applied jacket, install the field-applied jacket over the factory-applied jacket.

B. If more than one material is listed, selection from materials listed is Contractor's option.

C. Piping, Concealed:

1. None.

D. Piping, Exposed:

1. Aluminum, Smooth with Z-Shaped Locking Seam: 0.016 inch thick.
2. Stainless Steel, Type 304 or Type 316, Smooth No. 2B Finish with Z-Shaped Locking Seam: 0.016 inch thick.
3. Self-Adhesive Outdoor Jacket (Asphaltic)

3.20 UNDERGROUND, FIELD-APPLIED INSULATION JACKET

A. For underground direct-buried piping applications, install underground direct-buried jacket over insulation material.

END OF SECTION 23 07 19

SECTION 23 08 00 - COMMISSIONING FOR HVAC

PART 1 - GENERAL

1.1 RELATED DOCUMENTS

A. Drawings and general provisions of the Contract, including General and Supplementary Conditions and other Division 01 specification sections, apply to this section.

1.2 SUMMARY

A. Contractor is required to hire a third-party Commissioning Agent to perform mechanical, electrical, and plumbing commissioning for this project. See Sections 22 0800 and 26 0800 for additional information and requirements.

B. Commissioning process requirements for the following HVAC&R systems, assemblies, and equipment:

1. Cooling generation systems, including chilled-water systems and direct-expansion systems.
2. Heat generation systems, including furnaces.
3. Distribution systems, including air distribution (heating and cooling) systems, steam distribution systems, hot-water distribution systems, chilled-water distribution systems, glycol distribution systems, exhaust systems, and air-handling units.
4. Terminal and packaged units, including unit ventilators, unit heaters, fan-coil units, finned-tube radiation, hot water heating coils, steam heating coils, electric heating coils, and air terminal units, and packaged units.
5. Vibration systems, including vibration isolation devices and seismic restraints.
6. Controls and instrumentation, including BAS.
7. Systems testing and balancing verification, including heating-water piping systems, chilled-water piping systems, domestic hot-water circulating systems, supply-air systems, return-air systems, and exhaust-air systems.
8. Life safety dampers, including fire dampers, smoke dampers, and combination fire/smoke dampers.

1.3 DEFINITIONS

A. BAS: Building automation system.

B. DDC: Direct digital controls.

C. HVAC&R: Heating, Ventilating, Air Conditioning, and Refrigeration.

D. "Systems," "Subsystems," "Equipment," and "Components": Where these terms are used together or separately, they shall mean "as-built" systems, subsystems, equipment, and components.

E. TAB: Testing, adjusting, and balancing.

1.4 INFORMATIONAL SUBMITTALS

A. Qualification Data: For BAS and HVAC&R Testing Technician.

B. Construction Checklists: See related sections for technical requirements for the following construction checklists:

1. Vibration and seismic controls for HVAC&R piping and equipment.
2. Instrumentation and control for HVAC&R.
3. Heating-water piping and accessories.
4. Cooling-water piping and accessories.
5. Steam and condensate piping and accessories.
6. Metal ducts and accessories.
7. Fans.
8. Particulate air filtration.
9. Air-handling units.
10. Fan-coil units.
11. Variable-refrigerant-flow HVAC systems.
12. Exhaust fans.
13. Air terminal units.
14. Heating coils, hot water, steam, and electric.

1.5 QUALITY ASSURANCE

A. BAS Testing Technician Qualifications: Technicians to perform BAS construction checklist verification tests, construction checklist verification test demonstrations, commissioning tests, and commissioning test demonstrations shall have the following minimum qualifications:

1. Journey-level or equivalent skill level with knowledge of BAS, HVAC&R, plumbing systems, electrical systems and concepts, and building operations.
2. Minimum three (3) years' experience installing, servicing, and operating systems manufactured by approved manufacturer.
3. International Society of Automation (ISA) Certified Control Systems Technician (CCST) Level I.

B. HVAC&R Testing Technician Qualifications: Technicians to perform HVAC&R construction checklist verification tests, construction checklist verification test demonstrations, commissioning tests, and commissioning test demonstrations shall have the following minimum qualifications:

1. Journey-level or equivalent skill level. Vocational School four-year program graduate or an Associates degree in mechanical systems, air conditioning, or similar field. Degree may be offset by three (3) years' experience in servicing mechanical systems in the HVAC industry. Generally, required knowledge includes HVAC&R systems, electrical concepts, building operations, and application and use of tools and instrumentation to measure performance of HVAC&R equipment, assemblies, and systems.
2. Minimum three (3) years' experience installing, servicing, and operating systems manufactured by approved manufacturer.
3. One (1) of the following:

    a. National Environmental Balancing Bureau (NEBB) Certified Testing, Adjusting, and Balancing Technician.
    b. Associated Air Balance Council (AABC) Certified Test and Balance Technician.
    c. Owner retains the right to waive NEBB or AABC Certification.

C. Testing Equipment and Instrumentation Quality and Calibration: For test equipment and instrumentation required to perform HVAC&R commissioning work, perform the following:

1. Submit test equipment and instrumentation list. For each equipment or instrument, identify the following:

   a. Equipment/instrument identification number.
   b. Planned commissioning application or use.
   c. Manufacturer, make, model, and serial number.
   d. Calibration history, including certificates from agencies that calibrate the equipment and instrumentation.

2. Test equipment and instrumentation shall meet the following criteria:

   a. Capable of testing and measuring performance within the specified acceptance criteria.
   b. Be calibrated at the manufacturer's recommended intervals with current calibration tags permanently affixed to the instrument being used.
   c. Be maintained in good repair and operating condition throughout the duration of use on this project.
   d. Be recalibrated/repaired if dropped or damaged in any way since last calibrated.

D. Proprietary Test Instrumentation and Tools:

1. Equipment Manufacturer's Proprietary Instrumentation and Tools: For installed equipment included in the commissioning process, test instrumentation and tools manufactured or prescribed by equipment manufacturer to service, calibrate, adjust, repair, or otherwise work on its equipment or required as a condition of equipment warranty, perform the following:

   a. Submit proprietary instrumentation and tools list. For each instrument or tool, identify the following:

      1) Instrument or tool identification number.
      2) Equipment schedule designation of equipment for which the instrument or tool is required.
      3) Manufacturer, make, model, and serial number.
      4) Calibration history, including certificates from agencies that calibrate the instrument or tool, where appropriate.

   b. Include a separate list of proprietary test instrumentation and tools in the operation and maintenance manuals.
   c. HVAC&R proprietary test instrumentation and tools become the property of Owner at the time of Substantial Completion.

PART 2 - PRODUCTS (Not Used)

PART 3 - EXECUTION

3.1 COMMISSIONING PLAN

A. A commissioning plan shall be developed by the Commissioning Agent and shall include the following items:

1. A narrative description of the activities that will be accomplished during each phase of commissioning, including the personnel intended to accomplish each of the activities.
2. A listing of the specific equipment, appliances, or systems to be tested and a description of the tests to be performed.
3. Functions to be tested including, but not limited to, calibrations and economizer controls.
4. Conditions under which the test will be performed. Testing shall affirm winter and summer design conditions and full outside air conditions.
5. Measurable criteria for performance.

3.2 BUILDING OPERATIONS AND MAINTENANCE INFORMATION

A. The building operations and maintenance documents shall be provided to the owner and shall consist of manufacturers' information, specifications, and recommendations; programming procedures and data points; narratives; and other means of illustrating to the owner how the building, equipment, and systems are intended to be installed, maintained, and operated. Required regular maintenance actions for equipment and systems shall be clearly stated on a readily visible label. The label shall include the title or publication number for the operation and maintenance manual for that particular model and type of product.

3.3 MECHANICAL SYSTEMS AND SERVICE WATER-HEATING SYSTEMS COMMISSIONING AND COMPLETION REQUIREMENT

A. Prior to the final mechanical and plumbing inspections, the Commissioning Agent shall provide evidence of mechanical systems commissioning and completion in accordance with the provisions of this section. Construction document notes shall clearly indicate provisions for commissioning and completion requirements in accordance with this section and are permitted to refer to specifications for further requirements. Copies of all documentation shall be given to the owner or owner's authorized agent and made available to the code official upon request.

3.4 FUNCTIONAL PERFORMANCE TESTING

A. Equipment: Equipment functional performance testing shall demonstrate the installation and operation of components, systems, and system-to-system interfacing relationships in accordance with approved plans and specifications such that operation, function, and maintenance serviceability for each of the commissioned systems is confirmed. Testing shall include all modes and sequence of operation, including under full-load, part-load and the following emergency conditions:

1. All modes as described in the sequence of operation.
2. Redundant or automatic back-up mode.
3. Performance of alarms.

4. Mode of operation upon a loss of power and restoration of power.

Exception: Unitary or packaged HVAC equipment that does not require supply air economizers.

B. Controls: HVAC and service water-heating control systems shall be tested to document that control devices, components, equipment, and systems are calibrated and adjusted and operate in accordance with approved plans and specifications. Sequences of operation shall be functionally tested to document they operate in accordance with approved plans and specifications.

C. Economizers: Air economizers shall undergo a functional test to determine that they operate in accordance with manufacturer's specifications.

3.5 PRELIMINARY COMMISSIONING REPORT

A. A preliminary report of commissioning test procedures and results shall be completed and certified by the engineer or approved agency and provided to the building owner or owner's authorized agent. The report shall be organized with mechanical and service hot water findings in separate sections to allow independent review. The report shall be identified as "Preliminary Commissioning Report," shall include the completed Commissioning Compliance Checklists, and shall identify:

1. Itemization of deficiencies found during testing required by this section that have not been corrected at the time of report preparation.
2. Deferred tests that cannot be performed at the time of report preparation because of climatic conditions.
3. Climatic conditions required for performance of the deferred tests.
4. Results of functional performance tests.
5. Functional performance test procedures used during the commissioning process, including measurable criteria for test acceptance.

B. Acceptance of Report: Buildings, or portions thereof, shall not be considered as acceptable for a final inspection until the code official has received the Preliminary Commissioning Report from the building owner or owner's authorized agent.

C. Copy of Report. The code official shall be permitted to require that a copy of the Preliminary Commissioning Report be made available for review by the code official.

3.6 DOCUMENTATION REQUIREMENTS

A. All documents described in this section be provided to the building owner or owner's authorized agent within 90 days of the date of receipt of the certificate of occupancy.

1. System Balancing Report: A written report describing the activities and measurements completed.
2. Final Commissioning Report: A report of test procedures and results identified as "Final Commissioning Report" shall be delivered to the building owner or owner's authorized agent. The report shall be organized with mechanical system and service hot water system findings in separate sections to allow independent review. The report shall include the following:

    a. Results of functional performance tests.

b. Disposition of deficiencies found during testing, including details of corrective measures used or proposed.
c. Functional performance test procedures used during the commissioning process including measurable criteria for test acceptance, provided herein for repeatability.
d. Project specific commissioning checklists.
e. Exception: Deferred tests that cannot be performed at the time of report preparation due to climatic conditions.

3.7 GENERAL TESTING REQUIREMENTS

A. Certify that HVAC&R systems, subsystems, and equipment have been installed, calibrated, and started and are operating according to the Contract Documents and approved shop drawings and submittals.

B. Certify that HVAC&R instrumentation and control systems have been completed and calibrated, that they are operating according to the Contract Documents and approved shop drawings and submittals, and that pretest set points have been recorded.

C. Certify that TAB procedures have been completed and that TAB reports have been submitted, discrepancies corrected, and corrective work approved.

D. Set systems, subsystems, and equipment into operating mode to be tested according to approved test procedures (e.g., normal shutdown, normal auto position, normal manual position, unoccupied cycle, emergency power, and alarm conditions).

E. Measure capacities and effectiveness of systems, assemblies, subsystems, equipment, and components, including operational and control functions to verify compliance with acceptance criteria.

F. Test systems, assemblies, subsystems, equipment, and components operating modes, interlocks, control responses, and responses to abnormal or emergency conditions, and response according to acceptance criteria.

G. Construction Checklists: Prepare and submit detailed construction checklists for HVAC&R systems, subsystems, equipment, and components.

1. Contributors to the development of construction checklists shall include, but are not limited to, the following:

a. HVAC&R systems and equipment installers.
b. TAB technicians.
c. HVAC&R instrumentation and controls installers.

H. Perform tests using design conditions, whenever possible.

1. Simulated conditions may, with approval of Architect, be imposed using an artificial load when it is impractical to test under design conditions. Before simulating conditions, calibrate testing instruments. Provide equipment to simulate loads. Set simulated conditions as directed by Commissioning Coordinator and document simulated conditions and methods of simulation. After tests, return configurations and settings to normal operating conditions.
2. Commissioning test procedures may direct that set points be altered when simulating conditions is impractical.

3. Commissioning test procedures may direct that sensor values be altered with a signal generator when design or simulating conditions and altering set points are impractical.

I. If tests cannot be completed because of a deficiency outside the scope of the HVAC&R system, document the deficiency and report it to Owner. After deficiencies are resolved, reschedule tests.

J. If seasonal testing is specified, complete appropriate initial performance tests and documentation and schedule seasonal tests.

K. Coordinate schedule with, and perform the following activities at the direction of, Commissioning Coordinator.

L. Comply with construction checklist requirements, including material verification, installation checks, start-up, and performance tests requirements specified in sections specifying HVAC systems and equipment.

M. Provide technicians, instrumentation, tools, and equipment to complete and document the following:

1. Performance tests.
2. Demonstration of a sample of performance tests.
3. Commissioning tests.
4. Commissioning test demonstrations.

3.8 TAB COMMISSIONING TESTS

A. TAB Verification:
1. Prerequisites: Completion of "Examination" article requirements and correction of deficiencies, as specified in Section 230593 “Testing, Adjusting, and Balancing for HVAC”.
2. Completion of "Preparation" article requirements for preparation of a TAB plan that includes strategies and step-by-step procedures, and system-readiness checks and reports, as specified in Section 230593 “Testing, Adjusting, and Balancing for HVAC”.
3. Scope: HVAC&R air systems and hydronic piping systems.
4. Purpose: Differential flow relationships intended to maintain air pressurization differentials between the various areas of project.
5. Conditions of the Test:

   a. Commissioning Test Demonstration Sampling Rate: As specified in "Inspections" article in Section 230593 “Testing, Adjusting, and Balancing for HVAC”.
   b. Systems operating in full heating mode with minimum outside-air volume.
   c. Systems operating in full cooling mode with minimum outside-air volume.
   d. For measurements at air-handling units with economizer controls; systems operating in economizer mode with 100 percent outside air.

6. Acceptance Criteria:

   a. Under all conditions, rechecked measurements comply with "Inspections" article in Section 230593 “Testing, Adjusting, and Balancing for HVAC”.
   b. Additionally, no rechecked measurement shall differ from measurements documented in the final report by more than two (2) times the tolerances allowed.

c. Under all conditions, where the Contract Documents indicate a differential in airflow between supply and exhaust and/or return in a space, the differential relationship shall be maintained.

3.9 TERMINAL UNIT EQUIPMENT COMMISSIONING TESTS

A. Variable-Air-Volume or Constant-Air-Volume Terminal Air Units with Coils:

1. Prerequisites: Installation verification of the following:

a. Occupancy Input Device: Occupancy sensor.
b. Occupancy Output Device: DDC system binary output.
c. Room Temperature Input Device: Electronic temperature sensor.
d. Room Temperature Output Device: Electronic damper actuators and control-valve operators.
e. Display the following at the operator's workstation:

1) Room/area served.
2) Room occupied/unoccupied.
3) Room temperature indication.
4) Room temperature set point.
5) Room temperature set point, occupied.
6) Room temperature set point, unoccupied.
7) Air-damper position as percentage open.
8) Control-valve position as percentage open.

2. Scope: Variable-air-volume or constant-air-volume terminal air units with hydronic, steam, or electric coils in supply-air systems, and associated controls.
3. Purpose:

a. Occupancy-dependent room temperature set-point reset.
b. Room temperature control.

4. Conditions of the Test:

a. Commissioning Test Demonstration Sampling Rate: [10] [Insert number] percent of each model/size unit.
b. Temperature Control - Occupied: Start with the room unoccupied. Occupy the room and observe the change to occupied status. Observe temperature control until room temperature is stable at occupied set point plus or minus [1.0 degrees F] [Insert temperature].
c. Temperature Control - Unoccupied: Start with the room occupied. Vacate the room and observe the change to unoccupied status. Observe temperature control until room temperature is stable at unoccupied set point plus or minus [1.0 degrees F] [Insert temperature].

5. Acceptance Criteria:

a. Temperature Control - Occupied:

1) Control system status changes from "occupied" to "unoccupied" after the specified time.
2) Room temperature is stable at occupied set point plus or minus [1.0 degrees F] [Insert temperature] within [10] [Insert number] minutes of

occupancy. Room temperature does not overshoot or undershoot set point by more than [2.0 degrees F] [Insert temperature] during transition.

b. Temperature Control - Unoccupied:

1) Control system status changes from "unoccupied" to "occupied" [immediately] [after five (5) minutes of continuous occupancy].
2) Room temperature is stable at unoccupied set point plus or minus [1.0 degrees F] [Insert temperature] within [30] [Insert number] minutes of occupancy.

3.10 AIR-HANDLING SYSTEM COMMISSIONING TESTS

A. Air-Handler Mixed-Air and Supply-Air Control:

1. Prerequisites: Installation verification of the following:

a. Minimum Position Input Device: DDC system time schedule.
b. Output Device: DDC system analog output to modulating damper actuator(s).
c. Heating Reset Input Device: DDC system software.
d. Supply-Air Temperature Input Device: Duct-mounted electronic temperature sensor.
e. Cooling Reset Input Device: Outdoor- and return-air, duct-mounted electronic temperature sensors.
f. Display the following at the operator's workstation:

1) Mixed-air-temperature indication.
2) Mixed-air-temperature set point.
3) Mixed-air damper position.

2. Scope: Air handler with mixed-air control and associated controls.
3. Purpose:

a. Occupied time control.
b. Minimum damper position control.
c. Heating reset control.
d. Supply-air temperature control.
e. Cooling reset control.
f. Unoccupied time control.

4. Conditions of the Test:

a. Occupied Time Control: Start in unoccupied schedule. Advance to occupied schedule time.
b. Minimum Damper Position Control: Command system to mode in which minimum damper position is required.
c. Heating Reset Control: Create a call for heating.
d. Supply-Air Temperature Control: Override supply-air temperature set point to a value 2.0 degrees F above current supply-air temperature.
e. Cooling Reset Control: Override outdoor-air enthalpy to a value that exceeds return-air enthalpy.
f. Unoccupied Time Control: Advance to unoccupied schedule time.
g. Control Data Trend Log: Set up a data trend log of the following input device values and output device commands. Record data at hourly intervals. Submit

trend data for 24-hour periods in which natural conditions require heating reset control, supply-air temperature control, and cooling reset control.

1) Minimum position input device.
2) Heating reset input device.
3) Supply-air temperature input device.
4) Cooling reset input device.

5. Acceptance Criteria:

a. Occupied Time Control: Mixed-air control is active in occupied mode.
b. Minimum Damper Position Control: Controller opens minimum outdoor-air dampers or positions outdoor-air dampers to minimum position.
c. Heating Reset Control: Controller closes minimum outdoor-air dampers or sets outdoor-air dampers to minimum position.
d. Supply-Air Temperature Control: Controller modulates outdoor-, return-, and relief-air dampers to maintain temporary supply-air temperature set point plus or minus 1.0 degrees F.
e. Cooling Reset Control: Controller sets outdoor-air dampers to minimum position when outdoor-air enthalpy exceeds return-air enthalpy.
f. Unoccupied Time Control: Controller positions outdoor- and relief-air dampers closed and return-air dampers open.
g. Control Data Trend Log: Data verifies control according to sequence of control.

3.11 REQUIRED CHECKLIST FOR CODE COMPLIANCE

A. Commissioning Agent to complete the following checklist:

Project Information:_____Project Name: _____

Project Address: _____

Commissioning Authority: _____

☐ Commissioning Plan was used during construction and includes all items required Systems

☐ Adjusting and Balancing has been completed.

☐ HVAC Equipment Functional Testing has been executed. If applicable, deferred and follow-up testing is scheduled to be provided on:_____

☐ HVAC Controls Functional Testing has been executed. If applicable, deferred and follow-up testing is scheduled to be provided on:_____

☐ Economizer Functional Testing has been executed. If applicable, deferred and follow-up testing is scheduled to be provided on:_____

☐ Lighting Controls Functional Testing has been executed. If applicable, deferred and follow-up testing is scheduled to be provided on:_____

☐ Service Water Heating System Functional Testing has been executed. If applicable, deferred and follow-up testing is scheduled to be provided on:_____

☐ Manual, record documents and training have been completed or scheduled

☐ Preliminary Commissioning Report submitted to owner and includes all items required.

I hereby certify that the commissioning provider has provided me with evidence of mechanical, service water heating, and lighting systems commissioning in accordance with the 2018 International Energy Conservation Code.

Signature of Building Owner or Owner's Representative_____

Date_____

3.12 SAMPLE COMMISSIONING CHECKLISTS

A. See attached sample checklists below. The sample checklists are examples only, and do not reflect the scope of work for this project. Project specific checklists to be developed by the Commissioning Agent with example minimum requirements in the sample checklists below.

PLUMBING PIPING SYSTEMS & FIXTURES COMMISSIONING CHECKLIST

# 1	The pipe test reports for domestic, sanitary and storm piping have been submitted.	☐ Complete	Comments
		☐ N/A	
# 2	The underground sanitary main line has been inspected with a camera and is free of breaks and obstructions. A copy of the tape has been provided.	☐ Complete	Comments
		☐ N/A	
# 3	The domestic hot water temperature has been set.	☐ Complete	Comments
		☐ N/A	
# 4	An isolation valve has been installed on the hot and cold water lines serving each restroom.	☐ Complete	Comments
		☐ N/A	
# 5	All plumbing fixtures operate correctly. Automatic and manual flush valves have been adjusted.	☐ Complete	Comments
		☐ N/A	
# 6	Roof drains, horizontal leader, domestic hot and cold water pipe all are insulated.	☐ Complete	Comments
		☐ N/A	
# 7	All main piping runs have been identified and valves have been tagged. A copy of the valve tag chart has been provided, framed and installed in the main valve room.	☐ Complete	Comments
		☐ N/A ☐	
# 8	Shut off valves installed are accessible.	Complete	Comments
		☐ N/A	
# 9	Plumbing fixtures have been caulked.	☐ Complete	Comments
		☐ N/A	
# 10	All clean-outs have been installed and are accessible for maintenance.	☐ Complete	Comments
		☐ N/A	
# 11	Piping is adequately supported where the piping does not sag.	☐ Complete	Comments
		☐ N/A	

# 12	Piping penetrations have been sealed to maintain fire ratings.	☐ Complete	Comments
		☐ N/A	
# 13	No piping has been suspended from other pipe or equipment.	☐ Complete	Comments
		☐ N/A	
# 14	Dielectric unions have been installed to connect dissimilar metal pipe.	☐ Complete	Comments
		☐ N/A	
# 15	All gas piping inspections required by local code have been completed and reports submitted.	☐ Complete	Comments
		☐ N/A	
# 16	Air chambers or shoktrols are installed where necessary to prevent water hammer.	☐ Complete	Comments
		☐ N/A	
# 17	The system has been checked to ensure no parts are exposed to freezing conditions. Any areas exposed to freezing have been provided with an isolation means and the ability to be drained	☐ Complete	Comments
		☐ N/A	
# 18	The system has been disinfected and flushed as required by code	☐ Complete	Comments
		☐ N/A	
#19	Gas piping that is installed and is inaccessible is to be welded.	☐ Complete	Comments
		☐ N/A	
# 20	Trap primers have been installed are identified, are accessible and operate correctly	☐ Complete	Comments
		☐ N/A	
# 21	Backflow prevention devices are installed as required, have been tested and certifications are attached in a plastic insert onto the device.	☐ Complete	Comments
		☐ N/A	
#22	Gas piping supports have been installed where piping does not sag.	☐ Complete	Comments
		☐ N/A	
# 23	A rupture pan has been provided and is piped to the mop sink or nearest floor drain.	☐ Complete	Comments
		☐ N/A	

# 24	The hot water temperature has been tested to verify discharge temperature does not exceed 120 df.	☐ Complete	Comments
		☐ N/A	
# 25	All necessary PRVs have been installed and are correctly set	☐ Complete	Comments
		☐ N/A	
# 26	The valves have been provided at the hot water heater that will enable the removal of the heater without interrupting domestic water service.	☐ Complete	Comments
		☐ N/A	
# 27	The hot water expansion tank has been provided at each water heater.	☐ Complete	Comments
		☐ N/A	
# 28	Booster pump system has been started up and adjusted by the manufacturer with documentation of the startup included with this checklist	☐ Complete	Comments
		☐ N/A	
# 29	Pressure tanks have been opened to the system and proper air charge verified and documented on the tank.	☐ Complete	Comments
		☐ N/A	
# 30	Plumbing fixtures have been operated to verify water connections, pressure, and drainage.	☐ Complete	Comments
		☐ N/A	
# 31	Sinks and lavatories have been operated to hot water is on the left and cold water is on the right.	☐ Complete	Comments
		☐ N/A	
# 32	Automatic flush valves have been operated to verified they are not causing splashing.	☐ Complete	Comments
		☐ N/A	
# 33	Measure hot water temperature at each sink and lavatory to verify water temperature does not exceed 115 degrees.	☐ Complete	Comments
		☐ N/A	
# 34	Operate all electronic sensors to verify fixtures respond as designed.	☐ Complete	Comments
		☐ N/A	

END OF PLUMBING PIPING SYSTEMS & FIXTURES COMMISSIONING CHECKLIST

COMMISSIONING COMPLETED BY:_____DATE:_____

REFRIGERANT PIPING COMMISSIONING CHECKLIST

# 1	The pipe testing has been completed and the reports have been included with this checklist.	☐ Complete	Comments
		☐ N/A	
# 2	The fittings are wrought copper or wrought bronze, solder joint fittings, ANSI B16.22.	☐ Complete	Comments
		☐ N/A	
# 3	All piping is installed with a 1/8” slope downward in the direction of the compressor.	☐ Complete	Comments
		☐ N/A	
# 4	Oil traps and double risers are installed where oil return is required.	☐ Complete	Comments
		☐ N/A	
# 5	The piping is seamless copper tube, hard drawn, type ACR ASTM B75 for all sizes or type K or L, ASTM B88.	☐ Complete	Comments
		☐ N/A	
# 6	The dehydration process has been completed per Section 15530 and documents of the process are provided with this checklist	☐ Complete	Comments
		☐ N/A	
# 7	The piping system has been supplied with the full operating charge.	☐ Complete	Comments
		☐ N/A	
# 8	The refrigerant lines have been adequately insulated. Refer to Spec Section 15250 for insulation requirements.	☐ Complete	Comments
		☐ N/A	

END OF REFRIGERANT PIPING COMMISSIONING CHECKLIST

COMMISSIONING COMPLETED BY:_____DATE:_____

ROOFTOP CONSTANT VOLUME UNIT COMMISSIONING CHECKLIST

# 1	The installing contractor has completed the manufacturer's generated start-up checklist and a copy has been included with this checklist.	☐ Complete ☐ N/A	Comments
# 2	The unit has been air balanced and a copy of the balancing report has been included with this checklist.	☐ Complete ☐ N/A	Comments
# 3	The unit has been tied into and visible from the BAS (Building Automation System).	☐ Complete ☐ N/A	Comments
# 4	The final set of filter media has been installed and one spare set has been turned over to the owner.	☐ Complete ☐ N/A	Comments
# 5	Condensing coil fins are not damaged and the interior of the unit is clean.	☐ Complete ☐ N/A	Comments
# 6	All penetrations to the unit have been made in the manufacturers approved chase and not thru the drain pain or control cabinet.	☐ Complete ☐ N/A	Comments
# 7	The gas or electric disconnect have not been installed in a manner in which it will not interfere with the unit access.	☐ Complete ☐ N/A	Comments
# 8	The unit has been installed so that the condensate drains from the unit per manufacturer's recommendations. Condensate does not build up inside the unit.	☐ Complete ☐ N/A	Comments
# 9	The unit does not transmit excessive noise or vibration to the occupied areas.	☐ Complete ☐ N/A	Comments
# 10	All shipping materials have been removed, fan and filter section have been properly floated.	☐ Complete ☐ N/A	Comments
# 11	Unit tested in all modes of operation and completely functional and adjusted.	☐ Complete ☐ N/A	Comments
# 12	The unit smoke detector will shut down the unit when activated.	☐ Complete ☐ N/A	Comments

END OF ROOFTOP CONSTANT VOLUME UNIT COMMISSIONING CHECKLIST

COMMISSIONING COMPLETED BY:_____DATE:_____

FANS AND VENTILATORS COMMISSIONING CHECKLIST

# 1	The fans have been started and the startup report provided with this checklist has been completed of each unit	☐ Complete ☐ N/A	Comments
# 2	The fans/ventilators are operating within the manufacturers recommended amp draws.	☐ Complete ☐ N/A	Comments
# 3	The fans/ventilators are not producing excessive vibration or noise.	☐ Complete ☐ N/A	Comments
# 4	The fans/ventilators have been secured to the roof curbs.	☐ Complete ☐ N/A	Comments
# 5	The belt tensions on the fans and ventilators have been checked and are per the manufacturer's recommendations.	☐ Complete ☐ N/A	Comments
# 6	The fans/ventilators have been installed with a local means of disconnect.	☐ Complete ☐ N/A	Comments
# 7	The fans/ventilators have been tested and operated with the local control means. (t-stat, on-off switch, smoke detectors, BAS system.)	☐ Complete ☐ N/A	Comments
# 8	The fans/ventilators are not dented or show other signs of visible damage.	☐ Complete ☐ N/A	Comments
# 9	If controlled with a motor starter, heater sizing/adjustment has been checked and is accurate	☐ Complete ☐ N/A	Comments
# 10	The systems have been balanced and reports are included with this checklist.	☐ Complete ☐ N/A	Comments
# 11	Backdraft dampers & motorized dampers operate freely. Down and upstream dampers (smoke, fire, et) have been checked and are open to allow free flow of air.	☐ Complete ☐ N/A	Comments
# 12	If used for stairway/corridor pressurization during fire, have all proving methods been tested and adjusted.	☐ Complete ☐ N/A	Comments
# 13	If used for smoke exhaust, have all proving methods been tested and adjusted, has the equipment confirmed as being certified for the use.	☐ Complete ☐ N/A	Comments
# 14	All code required evacuation and pressurization tests have been completed and documentation has been included with this checklist.	☐ Complete ☐ N/A	Comments

END OF FANS AND VENTILATORS COMMISSIONING CHECKLIST

COMMISSIONING COMPLETED BY:_____DATE:_____

DUCTWORK COMMISSIONING CHECKLIST

# 1	The general condition of the ductwork is good. There are no dents, rust or other signs of discoloration.	☐ Complete	Comments
		☐ N/A	
# 2	Flexible ductwork connections have been made to air handlers, fans and similar equipment. The flexible ductwork connection is airtight.	☐ Complete	Comments
		☐ N/A	
# 3	The ductwork hanger system has been installed where the ductwork is supported rigidly and the duct is held true to shape. There is no buckling of the ductwork.	☐ Complete	Comments
		☐ N/A	
# 4	The ends of ductwork that are not in use shall be capped with a temporary closure.	☐ Complete	Comments
		☐ N/A	
# 5	Flexible ductwork runs do not exceed eight feet.	☐ Complete	Comments
		☐ N/A	
# 6	Ductwork joints have been sealed to prevent leakage.	☐ Complete	Comments
		☐ N/A	
# 7	All balancing and volume dampers are in place and operate freely.	☐ Complete	Comments
		☐ N/A	
# 8	All fire/smoke dampers are open and there are no obstructions	☐ Complete	Comments
		☐ N/A	

END OF DUCTWORK COMMISSIONING CHECKLIST

COMMISSIONING COMPLETED BY:_____DATE:_____

BUILDING AUTOMATION SYSTEM (BAS) COMMISSIONING CHECKLIST

# 1	All workstations, handheld devices, etc. required for the project are per specification and fully operational.	☐ Complete	Comments
		☐ N/A	
# 2	No integrated building system is “running wild” and all parameters of system control are being met.	☐ Complete	Comments
		☐ N/A	
# 3	All graphics including tenant space graphics are complete and accurate per Tenant standards and specifications.	☐ Complete	Comments
		☐ N/A	
# 4	All control wiring and devices prior to start-up have been tested. This includes verifying that all wiring is properly connected and free of all shorts and ground faults. Verify that all connections are tightened appropriately.	☐ Complete	Comments
		☐ N/A	
# 5	All analog output devices are functional, start point and span are correct, and that direction and normal positions are correct including fail-safe positions. All control valves and automatic dampers have been checked to ensure proper action and closure.	☐ Complete	Comments
		☐ N/A	
# 6	Digital output devices operate properly and the normal positions are correct.	☐ Complete	Comments
		☐ N/A	

END OF BUILDING AUTOMATION SYSTEM (BAS) COMMISSIONING CHECKLIST

COMMISSIONING COMPLETED BY:_____DATE:_____

Pipe Test Report

Form Project Name:_____

Building:_____ Project Number: _____

TEST RESULTS

I. Domestic Water Piping. (Hot, Cold, Make-up Water)
Location:
Floor:_____ Column line: ___

1. Normal Operating Pressure_____Psig.
2. Test Pressure_____Psig.
3. Water Temperature_____Degrees F.
4. Length of Test_____Hours.

II. Storm and Sanitary Waste Piping.
Location:
Floor:_____ Column line: ___

1. Water Head on Main =_____Ft. of Water.
2. Length of Test =_____Hours.

III. Air and Gas Piping.
1. Air Pressure =_____Psig.
2. Length of Test =_____Hours.

IV. Refrigerant Piping.
1. Vacuum Test Pressure =_____Psig.
2. Length of Test =_____Hours.

Test Approval (Contractor) _____

Test Witness (Owner)_____

Date: _____

Date: _____

COMMISSIONING COMPLETED BY:_____DATE:_____

Filter & Belt Inventory

As part of the commissioning process, the contractor is required to provide the following information for each piece of equipment installed on the site.

Equipment Tag	Equipment Location	Belt Sizes	Belt Quantity	Filter Sizes	Filter Quantity

COMMISSIONING COMPLETED BY:_____DATE:_____

Fans & Ventilators Start Up Report

Job Name:		
Start Up Date:	Technician:	
Make:	Model:	Tag ID:
Design Volts: / /	Actual Volts: / /	
Design Fuse/Breaker Size:	Actual Fuse/Breaker Size:	
Design Amps: / /	Actual Amps: / /	
Motor Control Type: Relay: Starter: Other (specify)		
Required overload size/settings:	Actual overload size/settings:	
HOA Switch operational:		
Differential pressure switch setting (if equipped):		
Damper Type: gravity Automatic Other (specify)		
Damper End Sw (Y/N): End Sw Operational and Adjusted (Y/N):		
Dampers operate smoothly (Y/N):	Down/Up stream fire/smoke dampers open (Y/N):	
Motor & Fan bearings lubricated (Y/N):	Drive Type: Belt : Direct	
Belt(s) properly tightened (Y/N):	Belt Size:	Belt Qnty:
Connection to BAS Completed and operates correctly (Y/N):		
All shipping materials removed (Y/N):		

Comments

Commissioning via the BAS is also required for these boxes.

A complete T&B from a certified agency is also required for these units if distribution ductwork is connected.									

COMMISSIONING COMPLETED BY:_____DATE:_____

Functional Test

HOT WATER SYSTEM including boilers, pumps and all related components

IMPORTANT:
Please refer to the Master Deficiency and Resolution Log for numbers referenced in parentheses, which will indicate deficiencies discovered and resolved. For quick reference you will find, in the front of this section a list of Master Deficiency and Resolution Log items pertaining only to this section.

1. Submittal / Approvals

Submittal. The above equipment and systems integral to them are complete and ready for functional testing. A Statement of Correction will be submitted upon completion of any outstanding areas. None of the outstanding items preclude safe and reliable functional tests being performed.

2. Prerequisite Checklist

a. All associated equipment has been started up and is ready for functional testing.
b. All control system functions for this and all interlocking systems are programmed and operable per contract documents, including balancing valves and sensor calibrations completed.
b. All A/E punchlist items for this equipment corrected.
c. Safeties and operating ranges reviewed.
d. This checklist does not take the place of the manufacturer's recommended checkout and startup procedures.
e. Items that do not apply shall be noted with the reasons on this form (N/A = not applicable, BO = by others).
f. Contractors assigned responsibility for sections of the checklist shall be responsible to see that checklist items by their subcontractors are completed and checked off.

3. Installation Checks

	Boilers and System	

Check Equip Tag➔	B-1	B-2	COMMENTS
General Installation			
Permanent labels affixed			
Casing condition good: no evidence of damage			
Concrete pad provided (4-6”) to ensure proper condensate drainage			
Thermal insulation properly installed			
Instrumentation installed according to specification (thermometers, pressure gages, flow meters, etc.)			
Clean up of equipment completed per contract documents			
Installation of combustion air fan and associated motorized damper			
Relief valve on boiler properly piped			
Boiler drain valves			
ASME Pressure relief valve			
Sensors calibrated			
HWR Manual Isolation Valve			
HWR Main Temperature Sensor-ATC			
HWS Main Temperature Sensor-ATC			
HWS Main isolation valve upstream of Air Separator			
HWR Isolation Valves to Boilers			
Emergency Boiler Switch at Door			
Exhaust vent pipe completely seased to prevent leakage of cumbustion products			
Manual Gas shutoff valve in place in case of overheating or gas supply failure. Location apparent			
Minimum clearance has been met as indicated Sides: 24 Inches Front: 24 Inches Rear: 30 Inches Top: 18 Inches			
Floor drain in place or condensate pump used to remove condensate			
Condensate drain trap associated fitting and drain line are removable for maintenance			
If using a sealed combustion air configuration, each unit must have a min of 8 inch diameter connection at unit.			
Valves and Piping and associated equipment			
Expansion tank installed			
Expansion Tank Auto Air vent			
Expansion Tank drain valve installed			
Expansion Tank Isolation Valve			
Air Separator in place between boilers and pumps			
Air Separator high capacity air vent installed			
Air Separator Drain in place			

Air Separator between boiler hot water supply and pump suction			
Piping arrangement installed per the contract documents			
Installation of chemical pot feeder and support devices			
Pipe fittings complete and pipes properly supported by floor, ceiling or walls and NOT by unit			
Pipes properly labeled			
Pipes properly insulated			
Valves properly labeled			
Valves installed in proper direction			
Piping system properly flushed			
No leaking apparent around fittings			
PRV - Automatic Fill and Check Valve installed on Makeup Water			
Pressure gauge installed after PRV on Cold Water Fill			
Glycol makeup Units fill valve in place			
Glycol makeup manually adjustable pressure switch			
Glycol makeup Control Panel in place			
Glycol makeup low water pilot light in place			
Glycol makeup manual shutoff on CW makeup			
Glycol makeup High level switch dry contacts in place to alarm at BMS			
Glycol makeup Low level switch dry contacts in place to alarm at BMS			
Glycol Makeup pump and piping (w/ instrumentation) according to detail.			
Chemical pot feeder installed as per detail			
Electrical and Controls			
Power disconnects in place and labeled			
Electrical conduit and hardware does not interfere with removal of any unit covers or inhibit maintenance/service			
No other devices share the same electrical circuit as the boilers			
All electric connections tight			
Safeties in place and operable			
Low water cut-off switch			

		Pumps		
Check	Equip Tag➔	HWP-1	HWP-2	COMMENTS

	Pumps		
Check Equip Tag➔	HWP-1	HWP-2	COMMENTS
General Installation			
Permanent labels affixed			
Casing condition good: No Damage			
Vibration Isolation in place			
Piping and Valves			
Common pressure gauge installed			
Piping insulated			
Piping labeled			
Associated valve appropriately labeled with valve tags			
Triple Duty Valve installed			
Isolation Valves installed as per documents			
Drain installed with			
Manual air vent installed			
Electrical and Controls			
VCF installed as per contract documents			
Disconnect in place and labeled			
All control devices installed properly			

The checklist items of Part 3 are all successfully completed for given trade ☐ *YES* ☐ *NO*

4. Performance Tests

Test	Compliance/Non-Compliance	Compliance/Non-Compliance	Comments
Equip Tag➔	B-1	B-2	
Performance Tests			
Calibration of BAS HWS and HWR			
Calibration of outdoor air sensor			
Capability of the temperature control system to stop/start boiler. Verify the motorized damper on combustion air fans opens prior to the start of the boiler.			
Hot water reset schedule capability at BAS OA 20ºF = 150ºF OA 55ºF = 110ºF			

Test	Compliance/Non-Compliance	Compliance/Non-Compliance	Comments
Equip Tag➔	B-1	B-2	
Record sequencing and/or operation of boilers when system is activated such that both boilers operate to maintain setpoint.			
Boiler safeties, staging and modulation shall be controlled thru the boiler control panel provided by the MFG			
Boilers operate in parallel			
Boilers are off when outdoor air is above 65 deg. F. adj.			
Boiler start time delay to prevent short cycling.			
Operation of hi water temp safeties for both boilers.			
Operation of low water cut off boiler Safeties for both boilers			
Boiler alarm bells in place and functional??			
Installation of a low temperature water alarm signal at the BAS. Record setpoint.			
Boiler/Burner Emergency Shutdown Switches at each entry door hardwired to boiler and burner controls			
Burner status in place			
Operating status of pumps			
Startup report performed only by manufacturer trained startup and service personnel has been provided and includes the performance of the combustion air calibration, proper set up of controls and limits, proper setup of modes of operation, and testing of all safety devices			

Graphic (Operator Station) Display	Compliance or Non Compliance
Equipment identification	
Boiler Enable/Disable	
Boiler(s) alarm status	
Supply water temperature sensor	
Supply water temperature setpoint	
Return water temperature sensor	
Pump Start/Stop	
Pump(s) Status	
Pump(s) VFD status	
Pump(s) VFD speed	
Pump(s) VFD alarm	
Differential pressure setpoint	

Differential pressure status	
Bypass valve command	
Outside air temperature indication	
Glycol Unit Identification	
Glycol Pump Status	
Glycol high level alarm (thru dry contacts)	
Glycol low level alarm (thru dry contacts)	
Glycol percentage alarm	

The checklist items of Part 4 are all successfully completed for given trade ☐ YES ☐ NO

5. Functional Testing Record

Test #	Test Name	Test Procedure (including special conditions)	Expected Response	Pass Y/N	
				Heating System	
				B-1	B-2
1	Heating System Enable	Override OA sensor and set below 60 deg F	Lead Boiler, associated Lead Primary Pump and Lead Secondary Hot Water Pump shall be energized on along with the oil transfer pumps		
2	Heating System Disable	Override OA sensor and set above 60 deg F	All boilers shall be disabled along with their associated primary pumps and the lead secondary pump.		

Test #	Test Name	Test Procedure (including special conditions)	Expected Response	Pass Y/N	
				Heating System	
				B-1	B-2
3	Operating control	Change parameters of the reset schedule to simulate a change in need for hot water supply temperature to the loop. Parameter setting shall be as follows but fully adjustable. OA Supply Temp 20ºF 150ºF 55ºF 110ºF	Ensure the BMS recalculates the system hot water setpoint. Boiler shall operate and burner shall control via internal controls until building hot water supply temperature in the common header reaches the setpoint (based on a reset schedule inversely proportional to outside air temperature		
4	Low Water Level Fault	Simulate a low water condition by tripping the low water cutout switch	Burner shuts down and alarm sent to BMS		
5	High Water Temperature Fault	Adjust the automatic over-temperature switch on front of unit. Lower the temp limit switch setting to match the displayed outlet temp	The unit should shut down. The fault indicator should start flashing and a ahight water temp switch open fault message should be displayed. Be sure to return the switch to its original setting to reset.		
6	Flame Fault	Set the On/Off switch to OFF. Place the unit in the Manual Mode and set the firing rate between 14% and 30%. Close the manual gas shutoff valve	The unit shall shut down		
7	Boiler and Burner Emergency Shutdown Control	Interrupt each burner safety circuit to turn off the boiler/burner by manually operated remote shutdown switch located at each boiler room door	Burner/boiler shall shutdown as it the switch is hardwired to the boiler/burner controls		
8	Autofill Make-up Unit	NOTE: Unit is controlled through factory supplied controls. Ensure that the following is happening	When the system pressure drops below setpoint of the pressure switch, the pump shall start and add fluid from the tank into the system. When the pressure setpoint is satisfied, the pump shall stop. A low condition (low level switch) will stop or not allow the pump to start.		
				Pass Y/N	
Test #	Test Name	Test Procedure (including special conditions)	Expected Response	HWP-1	HWP-2

Test #	Test Name	Test Procedure (including special conditions)	Expected Response	Pass Y/N	
				Heating System	
				B-1	B-2
9	Secondary Pumps Enable	Enable the heating system	Lead secondary pump shall operate continuously when activated.		
10	Secondary Pump Disable	Disable the heating system	The secondary pumps shall not run when the heating system is not energized.		
11	Secondary Pump Failure	Manually fail the lead secondary pump at VFD	An alarm shall be sent to the BMS and the lag pump shall be enabled and shall run continuously		
12	Secondary Pump Lead/Lag Swap	Set up trends on Secondary Pump Status.	Pumps shall alternate to equalize runtime. Selection of the lead and lag pump shall be evaluated on a weekly basis. The pump with the last amount of run time is lead. The remaining is the lag.		
		Manually swap the pumps via BMS controls	Ensure that the lead secondary pump swaps		
13	Secondary Pump Speed	Change the differential pressure (dp) setpoint	The pumps are controlled by (2) system dp sensors thru the associated VFD's. The controller will monitor both sensors and will control to maintain the setpoint using the sensor which is farthest from setpoint. The VFD shall ramp up and down to maintain the differential pressure setpoint per sensor(s).		
	Bypass Valve Operation	Simulate a situation where the frequency of the operating pump VFD drops to 15 HZ.	Should the frequency of the operating pump drop to 15 HZ, the bypass valve shall open to maintain system pressure		

COMMISSIONING COMPLETED BY:_____DATE:_____

END OF SECTION 23 08 00

SECTION 23 09 23 - DIRECT DIGITAL CONTROL (DDC) SYSTEM FOR HVAC

PART 1 - GENERAL

1.1 RELATED DOCUMENTS

A. Drawings and general provisions of the Contract, including General and Supplementary Conditions and Division 01 Specification Sections, apply to this Section.

1.2 SUMMARY

A. Section Includes:

1. DDC system for monitoring and controlling of HVAC systems.
2. Delivery of selected control devices to equipment and systems manufacturers for factory installation and to HVAC systems installers for field installation.

B. Related Requirements:

1. Section 230923.13 "Energy Meters" for thermal and electric power energy meters that connect to DDC systems.
2. Section 230923.17 "Level Instruments" for liquid-level switches, sensors, and transmitters that connect to DDC systems.
3. Section 230923.22 "Position Instruments" for limit switches that connect to DDC systems.
4. Section 230923.33 "Vibration Instruments" for vibration instruments that connect to DDC systems.
5. Section 230923.43 "Weather Stations" for weather stations that connect to DDC systems.
6. Section 230993.11 "Sequence of Operations for HVAC DDC" for control sequences in DDC systems.
7. Communications Cabling:

    a. Section 260523 "Control-Voltage Electrical Power Cables" for balanced twisted pair communications cable.
    b. Section 271513 "Communications Copper Horizontal Cabling" for balanced twisted pair communications cable.
    c. Section 271523 "Communications Optical Fiber Horizontal Cabling" for optical fiber communications cable.

8. Raceways:

    a. Section 260533 "Raceways and Boxes for Electrical Systems" for raceways for low-voltage control cable.
    b. Section 270528 "Pathways for Communications Systems" for raceways for balanced twisted pair cabling and optical fiber cable.

9. Section 260553 "Identification for Electrical Systems" for identification requirements for electrical components.
10. Section 270553 "Identification for Communications Systems" for identification requirements for communications components.

1.3 DEFINITIONS

A. Algorithm: A logical procedure for solving a recurrent mathematical problem. A prescribed set of well-defined rules or processes for solving a problem in a finite number of steps.

B. Analog: A continuously varying signal value, such as current, flow, pressure, or temperature.

C. BACnet Specific Definitions:

1. BACnet: Building Automation Control Network Protocol, ASHRAE 135. A communications protocol allowing devices to communicate data over and services over a network.
2. BACnet Interoperability Building Blocks (BIBBs): BIBB defines a small portion of BACnet functionality that is needed to perform a particular task. BIBBs are combined to build the BACnet functional requirements for a device.
3. BACnet/IP: Defines and allows using a reserved UDP socket to transmit BACnet messages over IP networks. A BACnet/IP network is a collection of one or more IP subnetworks that share the same BACnet network number.
4. BACnet Testing Laboratories (BTL): Organization responsible for testing products for compliance with ASHRAE 135, operated under direction of BACnet International.
5. PICS (Protocol Implementation Conformance Statement): Written document that identifies the options specified by BACnet that are implemented in a device.

D. Binary: Two-state signal where a high signal level represents ON" or "OPEN" condition and a low signal level represents "OFF" or "CLOSED" condition. "Digital" is sometimes used interchangeably with "Binary" to indicate a two-state signal.

E. Controller: Generic term for any standalone, microprocessor-based, digital controller residing on a network, used for local or global control. Three types of controllers are indicated: Network Controller, Programmable Application Controller, and Application-Specific Controller.

F. Control System Integrator: An entity that assists in expansion of existing enterprise system and support of additional operator interfaces to I/O being added to existing enterprise system.

G. COV: Changes of value.

H. DDC System Provider: Authorized representative of, and trained by, DDC system manufacturer and responsible for execution of DDC system Work indicated.

I. Distributed Control: Processing of system data is decentralized, and control decisions are made at subsystem level. System operational programs and information are provided to remote subsystems and status is reported back. On loss of communication, subsystems shall be capable of operating in a standalone mode using the last best available data.

J. DOCSIS: Data-Over Cable Service Interface Specifications.

K. E/P: Voltage to pneumatic.

L. Gateway: Bidirectional protocol translator that connects control systems that use different communication protocols.

M. HLC: Heavy load conditions.

N. I/O: System through which information is received and transmitted. I/O refers to analog input (AI), binary input (BI), analog output (AO) and binary output (BO). Analog signals are continuous and represent control influences such as flow, level, moisture, pressure, and temperature. Binary

signals convert electronic signals to digital pulses (values) and generally represent two-position operating and alarm status. "Digital," (DI and (DO), is sometimes used interchangeably with "Binary," (BI) and (BO), respectively.

O. I/P: Current to pneumatic.

P. LAN: Local area network.

Q. LNS: LonWorks Network Services.

R. LON Specific Definitions:

1. FTT-10: Echelon Transmitter-Free Topology Transceiver.
2. LonMark: Association comprising suppliers and installers of LonTalk products. Association provides guidelines for implementing LonTalk protocol to ensure interoperability through a standard or consistent implementation.
3. LonTalk: An open standard protocol developed by the Echelon Corporation that uses a "Neuron Chip" for communication. LonTalk is a register trademark of Echelon.
4. LonWorks: Network technology developed by Echelon.
5. Node: Device that communicates using CEA-709.1-C protocol and that is connected to a CEA-709.1-C network.
6. Node Address: The logical address of a node on the network, consisting of a Domain number, Subnet number, and Node number. "Node number" portion of an address is a number assigned to device during installation, is unique within a subnet, and is not a factory-set unique Node ID.
7. Node ID: A unique 48-bit identifier assigned at factory to each CEA-709.1-C device. Sometimes called a "Neuron ID."
8. Program ID: An identifier (number) stored in a device (usually EEPROM) that identifies node manufacturer, functionality of device (application and sequence), transceiver used, and intended device usage.
9. Standard Configuration Property Type (SCPT): Pronounced "skip-it." A standard format type maintained by LonMark International for configuration properties.
10. Standard Network Variable Type (SNVT): Pronounced "snivet." A standard format type maintained by LonMark used to define data information transmitted and received by individual nodes. "SNVT" is used in two ways. It is an acronym for "Standard Network Variable Type" and is often used to indicate a network variable itself (i.e., it can mean "a network variable of a standard network variable type").
11. Subnet: Consists of a logical grouping of up to 127 nodes, where logical grouping is defined by node addressing. Each subnet is assigned a number, which is unique within a Domain. See "Node Address."
12. TP/FT-10: Free Topology Twisted Pair network defined by CEA-709.3 and is most common media type for a CEA-709.1-C control network.
13. TP/XF-1250: High-speed, 1.25-Mbps, twisted-pair, doubly terminated bus network defined by "LonMark Interoperability Guidelines" typically used only to connect multiple TP/FT-10 networks.
14. User-Defined Configuration Property Type (UCPT): Pronounced "U-Keep-It." A Configuration Property format type that is defined by device manufacturer.
15. User-Defined Network Variable Type (UNVT): Network variable format defined by device manufacturer. UNVTs create non-standard communications that other vendors' devices may not correctly interpret and may negatively impact system operation. UNVTs are not allowed.

S. Low Voltage: As defined in NFPA 70 for circuits and equipment operating at less than 50 V or for remote-control, signaling power-limited circuits.

T. Mobile Device: A data-enabled phone or tablet computer capable of connecting to a cellular data network and running a native control application or accessing a web interface.

U. Modbus TCP/IP: An open protocol for exchange of process data.

V. MS/TP: Master-slave/token-passing, IEE 8802-3. Datalink protocol LAN option that uses twisted-pair wire for low-speed communication.

W. MTBF: Mean time between failures.

X. Network Controller: Digital controller, which supports a family of programmable application controllers and application-specific controllers, that communicates on peer-to-peer network for transmission of global data.

Y. Network Repeater: Device that receives data packet from one network and rebroadcasts it to another network. No routing information is added to protocol.

Z. Peer to Peer: Networking architecture that treats all network stations as equal partners.

AA. POT: Portable operator's terminal.

BB. PUE: Performance usage effectiveness.

CC. RAM: Random access memory.

DD. RF: Radio frequency.

EE. Router: Device connecting two or more networks at network layer.

FF. Server: Computer used to maintain system configuration, historical and programming database.

GG. TCP/IP: Transport control protocol/Internet protocol.

HH. UPS: Uninterruptible power supply.

II. USB: Universal Serial Bus.

JJ. User Datagram Protocol (UDP): This protocol assumes that the IP is used as the underlying protocol.

KK. VAV: Variable air volume.

LL. WLED: White light emitting diode.

1.4 PREINSTALLATION MEETINGS

A. Preinstallation Conference: Conduct conference at Project site.

1.5 ACTION SUBMITTALS

A. Multiple Submissions:

1. If multiple submissions are required to execute work within schedule, first submit a coordinated schedule clearly defining intent of multiple submissions. Include a proposed date of each submission with a detailed description of submittal content to be included in each submission.
2. Clearly identify each submittal requirement indicated and in which submission the information will be provided.
3. Include an updated schedule in each subsequent submission with changes highlighted to easily track the changes made to previous submitted schedule.

B. Product Data: For each type of product include the following:

1. Construction details, material descriptions, dimensions of individual components and profiles, and finishes.
2. Operating characteristics, electrical characteristics, and furnished accessories indicating process operating range, accuracy over range, control signal over range, default control signal with loss of power, calibration data specific to each unique application, electrical power requirements, and limitations of ambient operating environment, including temperature and humidity.
3. Product description with complete technical data, performance curves, and product specification sheets.
4. Installation, operation and maintenance instructions including factors effecting performance.
5. Bill of materials of indicating quantity, manufacturer, and extended model number for each unique product, including but not limited to:.

    a. Workstations.
    b. Servers.
    c. Printers.
    d. Gateways.
    e. Routers.
    f. Protocol analyzers.
    g. DDC controllers.
    h. Enclosures.
    i. Electrical power devices.
    j. UPS units.
    k. Accessories.
    l. Instruments.
    m. Control dampers and actuators.
    n. Control valves and actuators.

6. When manufacturer's product datasheets apply to a product series rather than a specific product model, clearly indicate and highlight only applicable information.
7. Each submitted piece of product literature shall clearly cross reference specification and drawings that submittal is to cover.

C. Software Submittal:

1. Cross-referenced listing of software to be loaded on each operator workstation, server, gateway, and DDC controller.
2. Description and technical data of all software provided, and cross-referenced to products in which software will be installed.
3. Operating system software, operator interface and programming software, color graphic software, DDC controller software, maintenance management software, and third-party software.
4. Include a flow diagram and an outline of each subroutine that indicates each program variable name and units of measure.

5. Listing and description of each engineering equation used with reference source.
6. Listing and description of each constant used in engineering equations and a reference source to prove origin of each constant.
7. Description of operator interface to alphanumeric and graphic programming.
8. Description of each network communication protocol.
9. Description of system database, including all data included in database, database capacity and limitations to expand database.
10. Description of each application program and device drivers to be generated, including specific information on data acquisition and control strategies showing their relationship to system timing, speed, processing burden and system throughout.
11. Controlled Systems: Instrumentation list with element name, type of device, manufacturer, model number, and product data. Include written description of sequence of operation including schematic diagram.

D. Sustainable Design Submittals:

1. Product Data: For indicated products, indicating compliance with requirements for ENERGY STAR product labeling.
2. Product Data: For adhesives, indicating VOC content.
3. Laboratory Test Reports: For adhesives, indicating compliance with requirements for low-emitting materials.

E. Shop Drawings:

1. General Requirements:

   a. Include cover drawing with Project name, location, Owner, Architect, Contractor and issue date with each Shop Drawings submission.
   b. Include a drawing index sheet listing each drawing number and title that matches information in each title block.

2. Include plans, elevations, sections, and mounting details where applicable.
3. Include details of product assemblies. Indicate dimensions, weights, loads, required clearances, method of field assembly, components, and location and size of each field connection.
4. Detail means of vibration isolation and show attachments to rotating equipment.
5. Plan Drawings indicating the following:

   a. Screened backgrounds of walls, structural grid lines, HVAC equipment, ductwork, and piping.
   b. Room names and numbers with coordinated placement to avoid interference with control products indicated.
   c. Each desktop workstation, server, gateway, router, DDC controller, control panel instrument connecting to DDC controller, and damper and valve connecting to DDC controller, if included in Project.
   d. Exact placement of products in rooms, ducts, and piping to reflect proposed installed condition.
   e. Network communication cable and raceway routing.
   f. Proposed routing of wiring, cabling, conduit, and tubing, coordinated with building services for review before installation.

6. Schematic drawings for each controlled HVAC system indicating the following:

a. I/O points labeled with point names shown. Indicate instrument range, normal operating set points, and alarm set points. Indicate fail position of each damper and valve, if included in Project.
b. I/O listed in table format showing point name, type of device, manufacturer, model number, and cross-reference to product data sheet number.
c. A graphic showing location of control I/O in proper relationship to HVAC system.
d. Wiring diagram with each I/O point having a unique identification and indicating labels for all wiring terminals.
e. Unique identification of each I/O that shall be consistently used between different drawings showing same point.
f. Elementary wiring diagrams of controls for HVAC equipment motor circuits including interlocks, switches, relays, and interface to DDC controllers.
g. Narrative sequence of operation.
h. Graphic sequence of operation, showing all inputs and output logical blocks.

7. Control panel drawings indicating the following:

a. Panel dimensions, materials, size, and location of field cable, raceways, and tubing connections.
b. Interior subpanel layout, drawn to scale and showing all internal components, cabling and wiring raceways, nameplates, and allocated spare space.
c. Front, rear, and side elevations and nameplate legend.
d. Unique drawing for each panel.

8. DDC system network riser diagram indicating the following:

a. Each device connected to network with unique identification for each.
b. Interconnection of each different network in DDC system.
c. For each network, indicate communication protocol, speed and physical means of interconnecting network devices, such as copper cable type, or optical fiber cable type. Indicate raceway type and size for each.
d. Each network port for connection of an operator workstation or other type of operator interface with unique identification for each.

9. DDC system electrical power riser diagram indicating the following:

a. Each point of connection to field power with requirements (volts/phase//hertz/amperes/connection type) listed for each.
b. Each control power supply including, as applicable, transformers, power-line conditioners, transient voltage suppression and high filter noise units, DC power supplies, and UPS units with unique identification for each.
c. Each product requiring power with requirements (volts/phase//hertz/amperes/connection type) listed for each.
d. Power wiring type and size, race type, and size for each.

10. Monitoring and control signal diagrams indicating the following:

a. Control signal cable and wiring between controllers and I/O.
b. Point-to-point schematic wiring diagrams for each product.
c. Control signal tubing to sensors, switches, and transmitters.
d. Process signal tubing to sensors, switches, and transmitters.
e. Pneumatic main air and control signal tubing to pneumatic damper and valve actuators, pilot-positioners if applicable, and associated transducers.

11. Color graphics indicating the following:

a. Itemized list of color graphic displays to be provided.
b. For each display screen to be provided, a true color copy showing layout of pictures, graphics, and data displayed.
c. Intended operator access between related hierarchical display screens.

F. System Description:

1. Full description of DDC system architecture, network configuration, operator interfaces and peripherals, servers, controller types and applications, gateways, routers and other network devices, and power supplies.
2. Complete listing and description of each report, log and trend for format and timing, and events which initiate generation.
3. System and product operation under each potential failure condition including, but not limited to, the following:

   a. Loss of power.
   b. Loss of network communication signal.
   c. Loss of controller signals to inputs and outpoints.
   d. Operator workstation failure.
   e. Server failure.
   f. Gateway failure.
   g. Network failure
   h. Controller failure.
   i. Instrument failure.
   j. Control damper and valve actuator failure.

4. Complete bibliography of documentation and media to be delivered to Owner.
5. Description of testing plans and procedures.
6. Description of Owner training.

G. Samples:

1. For each of the following exposed product, installed in finished space for approval of selection of aesthetic characteristics:

   a. Gas instruments specified in Section 230923.16 "Gas Instruments."
   b. Moisture instruments specified in Section 230923.19 "Moisture Instruments."
   c. Motion instruments specified in Section 230923.21 "Motion Instruments."
   d. Pressure instruments specified in Section 230923.23 "Pressure Instruments."
   e. Temperature instruments specified in Section 230923.27 "Temperature Instruments."

H. Delegated-Design Submittal: For DDC system products and installation indicated as being delegated.

1. Supporting documentation showing DDC system design complies with performance requirements indicated, including calculations and other documentation necessary to prove compliance.
2. Schedule and design calculations for control dampers and actuators.

   a. Flow at Project design and minimum flow conditions.
   b. Face velocity at Project design and minimum airflow conditions.
   c. Pressure drop across damper at Project design and minimum airflow conditions.
   d. AMCA 500-D damper installation arrangement used to calculate and schedule pressure drop, as applicable to installation.

e. Maximum close-off pressure.
f. Leakage airflow at maximum system pressure differential (fan close-off pressure).
g. Torque required at worst case condition for sizing actuator.
h. Actuator selection indicating torque provided.
i. Actuator signal to control damper (on, close, or modulate).
j. Actuator position on loss of power.
k. Actuator position on loss of control signal.

3. Schedule and design calculations for control valves and actuators.

a. Flow at Project design and minimum flow conditions.
b. Pressure-differential drop across valve at Project design flow condition.
c. Maximum system pressure-differential drop (pump close-off pressure) across valve at Project minimum flow condition.
d. Design and minimum control valve coefficient with corresponding valve position.
e. Maximum close-off pressure.
f. Leakage flow at maximum system pressure differential.
g. Torque required at worst case condition for sizing actuator.
h. Actuator selection indicating torque provided.
i. Actuator signal to control damper (on, close or modulate).
j. Actuator position on loss of power.
k. Actuator position on loss of control signal.

4. Schedule and design calculations for selecting flow instruments.

a. Instrument flow range.
b. Project design and minimum flow conditions with corresponding accuracy, control signal to transmitter, and output signal for remote control.
c. Extreme points of extended flow range with corresponding accuracy, control signal to transmitter, and output signal for remote control.
d. Pressure-differential loss across instrument at Project design flow conditions.
e. Where flow sensors are mated with pressure transmitters, provide information for each instrument separately and as an operating pair.

1.6 INFORMATIONAL SUBMITTALS

A. Coordination Drawings:

1. Plan drawings and corresponding product installation details, drawn to scale, on which the following items are shown and coordinated with each other, using input from installers of the items involved:

a. Product installation location shown in relationship to room, duct, pipe and equipment.
b. Structural members to which products will be attached.
c. Wall-mounted instruments located in finished space showing relationship to light switches, fire-alarm devices and other installed devices.
d. Size and location of wall access panels for products installed behind walls and requiring access.

2. Reflected ceiling plans and other details, drawn to scale, on which the following items are shown and coordinated with each other, using input from installers of the items involved:

a. Ceiling components.

b. Size and location of access panels for products installed above inaccessible ceiling assemblies and requiring access.
c. Items penetrating finished ceiling including the following:

1) Lighting fixtures.
2) Air outlets and inlets.
3) Speakers.
4) Sprinklers.
5) Access panels.
6) Motion sensors.
7) Pressure sensors.
8) Temperature sensors and other DDC control system instruments.

B. Qualification Data:

1. Systems Provider Qualification Data:

a. Resume of project manager assigned to Project.
b. Resumes of application engineering staff assigned to Project.
c. Resumes of installation and programming technicians assigned to Project.
d. Resumes of service technicians assigned to Project.
e. Brief description of past project including physical address, floor area, number of floors, building system cooling and heating capacity, and building's primary function.
f. Description of past project DDC system, noting similarities to Project scope and complexity indicated.
g. Names of staff assigned to past project that will also be assigned to execute work of this Project.
h. Owner contact information for past project including name, phone number, and e-mail address.
i. Contractor contact information for past project including name, phone number, and e-mail address.
j. Architect and Engineer contact information for past project including name, phone number, and e-mail address.

2. Manufacturer's qualification data.
3. Testing agency's qualifications data.

C. Welding certificates.

D. Product Certificates:

1. Data Communications Protocol Certificates: Certifying that each proposed DDC system component complies with ASHRAE 135.
2. Data Communications Protocol Certificates: Certifying that each proposed DDC system component complies with LonWorks.

E. Product Test Reports: For each product that requires testing to be performed by manufacturer and witnessed by a qualified testing agency.

F. Preconstruction Test Reports: For each separate test performed.

G. Source quality-control reports.

H. Field quality-control reports.

I. Sample Warranty: For manufacturer's warranty.

1.7 CLOSEOUT SUBMITTALS

A. Operation and Maintenance Data: For DDC system to include in emergency, operation, and maintenance manuals.

1. In addition to items specified in Section 017823 "Operation and Maintenance Data," include the following:

   a. Project Record Drawings of as-built versions of submittal Shop Drawings provided in electronic PDF format.
   b. Testing and commissioning reports and checklists of completed final versions of reports, checklists, and trend logs.
   c. As-built versions of submittal Product Data.
   d. Names, addresses, e-mail addresses, and 24-hour telephone numbers of Installer and service representatives for DDC system and products.
   e. Operator's manual with procedures for operating control systems including logging on and off, handling alarms, producing point reports, trending data, overriding computer control, and changing set points and variables.
   f. Programming manuals with description of programming language and syntax, of statements for algorithms and calculations used, of point database creation and modification, of program creation and modification, and of editor use.
   g. Engineering, installation, and maintenance manuals that explain how to:

      1) Design and install new points, panels, and other hardware.
      2) Perform preventive maintenance and calibration.
      3) Debug hardware problems.
      4) Repair or replace hardware.

   h. Documentation of all programs created using custom programming language including set points, tuning parameters, and object database.
   i. Backup copy of graphic files, programs, and database on electronic media such as DVDs.
   j. List of recommended spare parts with part numbers and suppliers.
   k. Complete original-issue documentation, installation, and maintenance information for furnished third-party hardware including computer equipment and sensors.
   l. Complete original-issue copies of furnished software, including operating systems, custom programming language, operator workstation software, and graphics software.
   m. Licenses, guarantees, and warranty documents.
   n. Recommended preventive maintenance procedures for system components, including schedule of tasks such as inspection, cleaning, and calibration; time between tasks; and task descriptions.
   o. Owner training materials.

1.8 MAINTENANCE MATERIAL SUBMITTALS

A. Furnish extra materials and parts that match products installed and that are packaged with protective covering for storage and identified with labels describing contents.

B. Include product manufacturers' recommended parts lists for proper product operation over four-year period following warranty period. Parts list shall be indicated for each year.

C. Furnish parts, as indicated by manufacturer's recommended parts list, for product operation during one-year period following warranty period.

D. Furnish quantity indicated of matching product(s) in Project inventory for each unique size and type of following:

1. Network Controller: One.
2. Programmable Application Controller: One.
3. Application-Specific Controller: One.
4. Carbon Dioxide Sensor and Transmitter: One.
5. Moisture Sensor and Transmitter: One.
6. Pressure Sensor and Transmitter: One.
7. Temperature Sensor and Transmitter: One.
8. General-Purpose Relay: One.
9. Multifunction Time-Delay Relay: One.
10. Latching Relay: One.
11. Current-Sensing Relay: One.
12. Combination On-Off Status Sensor and On-Off Relay: One.
13. Transformer: One.
14. DC Power Supply: One.
15. Supply of 20 percent spare optical fiber cable splice organizer cabinets for several re-terminations.

1.9 QUALITY ASSURANCE

A. DDC System Manufacturer Qualifications:

1. Nationally recognized manufacturer of DDC systems and products.
2. DDC systems with similar requirements to those indicated for a continuous period of five years within time of bid.
3. DDC systems and products that have been successfully tested and in use on at least five past projects.
4. Having complete published catalog literature, installation, operation, and maintenance manuals for all products intended for use.
5. Having full-time in-house employees for the following:

    a. Product research and development.
    b. Product and application engineering.
    c. Product manufacturing, testing, and quality control.
    d. Technical support for DDC system installation training, commissioning, and troubleshooting of installations.
    e. Owner operator training.

B. DDC System Provider Qualifications:

1. Authorized representative of, and trained by, DDC system manufacturer.
2. Demonstrated past experience with installation of DDC system products being installed for period within five consecutive years before time of bid.
3. Demonstrated past experience on five projects of similar complexity, scope, and value.
4. Each person assigned to Project shall have demonstrated past experience.
5. Staffing resources of competent and experienced full-time employees that are assigned to execute work according to schedule.
6. Service and maintenance staff assigned to support Project during warranty period.

7. Product parts inventory to support on-going DDC system operation for a period of not less than 5 years after Substantial Completion.
8. DDC system manufacturer's backing to take over execution of Work if necessary to comply with requirements indicated. Include Project-specific written letter, signed by manufacturer's corporate officer, if requested.

C. Testing Agency Qualifications: Member company of NETA.

1. Testing Agency's Field Supervisor: Certified by NETA to supervise on-site testing.

D. Welding Qualifications: Qualify procedures and personnel according to the following:

1. AWS D1.1/D1.1M, "Structural Welding Code - Steel."
2. AWS D1.2/D1.2M, "Structural Welding Code - Aluminum."
3. AWS D1.3/D1.3M, "Structural Welding Code - Sheet Steel."
4. AWS D1.4/D1.4M, "Structural Welding Code - Reinforcing Steel."

E. Pipe and Pressure-Vessel Welding Qualifications: Qualify procedures and operators according to "ASME Boiler and Pressure Vessel Code."

F. Mockups: Build mockups to verify selections made under Sample submittals, to demonstrate aesthetic effects, and to set quality standards for materials and products and for fabrication and installation.

1. Build mockups of completed installation for areas indicated on Drawings.
2. Approval of mockups does not constitute approval of deviations from Contract Documents contained in mockups unless Architect specifically approves such deviations in writing.

1.10 WARRANTY

A. Manufacturer's Warranty: Manufacturer and Installer agree to repair or replace products that fail in materials or workmanship within specified warranty period.

1. Failures shall be adjusted, repaired, or replaced at no additional cost or reduction in service to Owner.
2. Include updates or upgrades to software and firmware if necessary to resolve deficiencies.

a. Install updates only after receiving Owner's written authorization.

3. Warranty service shall occur during normal business hours and commence within 16 hours of Owner's warranty service request.
4. Warranty Period: Two year(s) from date of Substantial Completion.

a. For Gateway: Two-year parts and labor warranty for each.

PART 2 - PRODUCTS

2.1 DDC SYSTEM MANUFACTURERS

A. Manufacturers: Subject to compliance with requirements, provide products by one of the following:

1. Alerton Inc.
2. Automated Logic Corporation.
3. Honeywell International Inc.
4. Johnson Controls, Inc.
5. KMC Controls, Inc.
6. Siemens Industry, Inc., Building Technologies Division.
7. Trane.

2.2 DDC SYSTEM DESCRIPTION

A. Microprocessor-based monitoring and control including analog/digital conversion and program logic. A control loop or subsystem in which digital and analog information is received and processed by a microprocessor, and digital control signals are generated based on control algorithms and transmitted to field devices to achieve a set of predefined conditions.

1. DDC system shall consist of a high-speed, peer-to-peer network of distributed DDC controllers, other network devices, operator interfaces, and software.

B. Electrical Components, Devices, and Accessories: Listed and labeled as defined in NFPA 70, by a qualified testing agency, and marked for intended location and application.

2.3 WEB ACCESS

A. DDC system shall be web based.

1. Web-Based Access to DDC System:

a. DDC system software shall be based on server thin-client architecture, designed around open standards of web technology. DDC system server shall be accessed using a web browser over DDC system network, using Owner's LAN, and remotely over Internet through Owner's LAN.
b. Intent of thin-client architecture is to provide operators complete access to DDC system via a web browser. No special software other than a web browser shall be required to access graphics, point displays, and trends; to configure trends, points, and controllers; and to edit programming.
c. Web access shall be password protected.

2.4 PERFORMANCE REQUIREMENTS

A. Delegated Design, Qualified Professional: Engage a qualified professional to design DDC system to satisfy requirements indicated.

1. System Performance Objectives:

a. DDC system shall manage HVAC systems.
b. DDC system control shall operate HVAC systems to achieve optimum operating costs while using least possible energy and maintaining specified performance.
c. DDC system shall respond to power failures, HVAC equipment failures, and adverse and emergency conditions encountered through connected I/O points.
d. DDC system shall operate while unattended by an operator and through operator interaction.

e. DDC system shall record trends and transaction of events and produce report information such as performance, energy, occupancies, and equipment operation.

B. Surface-Burning Characteristics: Products installed in ducts, equipment, and return-air paths shall comply with ASTM E84; testing by a qualified testing agency. Identify products with appropriate markings of applicable testing agency.

1. Flame-Spread Index: 25 or less.
2. Smoke-Developed Index: 50 or less.

C. DDC System Speed:

1. Response Time of Connected I/O:

a. AI point values connected to DDC system shall be updated at least every five seconds for use by DDC controllers. Points used globally shall also comply with this requirement.
b. BI point values connected to DDC system shall be updated at least every five seconds for use by DDC controllers. Points used globally shall also comply with this requirement.
c. AO points connected to DDC system shall begin to respond to controller output commands within two second(s). Global commands shall also comply with this requirement.
d. BO point values connected to DDC system shall respond to controller output commands within two second(s). Global commands shall also comply with this requirement.

2. Display of Connected I/O:

a. Analog point COV connected to DDC system shall be updated and displayed at least every 10 seconds for use by operator.
b. Binary point COV connected to DDC system shall be updated and displayed at least every 10 seconds for use by operator.
c. Alarms of analog and digital points connected to DDC system shall be displayed within 15 seconds of activation or change of state.
d. Graphic display refresh shall update within eight seconds.
e. Point change of values and alarms displayed from workstation to workstation when multiple operators are viewing from multiple workstations shall not exceed graphic refresh rate indicated.

D. Network Bandwidth: Design each network of DDC system to include at least 30 percent available spare bandwidth with DDC system operating under normal and heavy load conditions indicated. Calculate bandwidth usage and apply a safety factor to ensure that requirement is satisfied when subjected to testing under worst case conditions.

E. DDC System Data Storage:

1. Include capability to archive not less than 24 consecutive months of historical data for all I/O points connected to system, including alarms, event histories, transaction logs, trends and other information indicated.
2. Local Storage:

a. Provide server with data storage indicated. Server(s) shall use IT industry standard database platforms and be capable of functions described in "DDC Data Access" Paragraph.

3. Cloud Storage:

    a. Provide application-based and web browser interfaces to configure, upload, download, and manage data, and service plan with storage adequate to store all data for term indicated. Cloud storage shall use IT industry standard database platforms and be capable of functions described in "DDC Data Access" Paragraph.

F. DDC Data Access:

1. When logged into the system, operator shall be able to also interact with any DDC controller connected to DDC system as required for functional operation of DDC system.
2. System(s) shall be used for application configuration; for archiving, reporting and trending of data; for operator transaction archiving and reporting; for network information management; for alarm annunciation; and for operator interface tasks and controls application management.

G. Future Expandability:

1. DDC system size shall be expandable to an ultimate capacity of at least two times total I/O points indicated.
2. Additional DDC controllers, I/O and associated wiring shall be all that is needed to achieve ultimate capacity. Initial network infrastructure shall be designed and installed to support ultimate capacity.
3. Operator interfaces installed initially shall not require hardware and software additions and revisions for ultimate capacity.

H. Input Point Displayed Accuracy: Input point displayed values shall meet following end-to-end overall system accuracy, including errors associated with meter, sensor, transmitter, lead wire or cable, and analog to digital conversion.

1. Energy:

    a. Thermal: Within 5 percent of reading.
    b. Electric Power: Within 1 percent of reading.
    c. Requirements indicated on Drawings for meters not supplied by utility.

2. Flow:

    a. Air: Within 5 percent of design flow rate.
    b. Air (Terminal Units): Within 10 percent of design flow rate.
    c. Water: Within 2 percent of design flow rate.
    d. Steam: Within 5 percent of design flow rate.

3. Gas:

    a. Carbon Dioxide: Within 50 ppm.
    b. Carbon Monoxide: Within 5 percent of reading.
    c. Oxygen: Within 5 percent of reading.
    d. Refrigerant: Within 50 ppm.

4. Moisture (Relative Humidity):

    a. Air: Within 5 percent RH.
    b. Space: Within 5 percent RH.
    c. Outdoor: Within 5 percent RH.

5. Level: Within 5 percent of reading.
6. Pressure:

    a. Air, Ducts and Equipment: 1 percent of instrument.
    b. Space: Within 1 percent of instrument.
    c. Water: Within 1 percent of instrument.
    d. Steam: Within 1 percent of instrument.

7. Speed: Within 10 percent of reading.
8. Temperature, Dew Point:

    a. Air: Within 1 deg F.
    b. Space: Within 1 deg F.
    c. Outdoor: Within 3 deg F.

9. Temperature, Dry Bulb:

    a. Air: Within 1 deg F.
    b. Space: Within 1 deg F.
    c. Outdoor: Within 2 deg F.
    d. Chilled Water: Within 1 deg F.
    e. Condenser Water: Within 1 deg F.
    f. Heating Hot Water: Within 1 deg F.
    g. Energy Recovery Runaround Liquid: Within 1 deg F.
    h. Steam: Within 2 deg F.
    i. Temperature Difference: Within 0.25 deg F.
    j. Other Temperatures Not Indicated: Within 1 deg F.

10. Temperature, Wet Bulb:

    a. Air: Within 1 deg F.
    b. Space: Within 1 deg F.
    c. Outdoor: Within 2 deg F.

11. Vibration: Within 5 percent of reading.

I. Precision of I/O Reported Values: Values reported in database and displayed shall have following precision:

1. Current:

    a. Milliamperes: Nearest 1/100th of a milliampere.
    b. Amperes: Nearest 1/10th of an ampere up to 100 A; nearest ampere for 100 A and more.

2. Energy:

    a. Electric Power:

        1) Rate (Watts): Nearest 1/10th of a watt through 1000 W.
        2) Rate (Kilowatts): Nearest 1/10th of a kilowatt through 1000 kW; nearest kilowatt above 1000 kW.
        3) Usage (Kilowatt-Hours): Nearest kilowatt through 10,000 kW; nearest 10 kW between 10,000 and 100,000 kW; nearest 100 kW for above 100,000 kW.

b. Thermal, Rate:

1) Heating: For Btu/h, nearest Btu/h up to 1000 Btu/h; nearest 10 Btu/h between 1000 and 10,000 Btu/h; nearest 100 Btu/h for above 10,000 Btu/h. For Mbh, round to nearest Mbh up to 1000 Mbh; nearest 10 Mbh between 1000 and 10,000 Mbh; nearest 100 Mbh above 10,000 Mbh.
2) Cooling: For tons, nearest ton up to 1000 tons; nearest 10 tons between 1000 and 10,000 tons; nearest 100 tons above 10,000 tons.

c. Thermal, Usage:

1) Heating: For Btu, nearest Btu up to 1000 Btu; nearest 10 Btu between 1000 and 10,000 Btu; nearest 100 Btu for above 10,000 Btu. For Mbtu, round to nearest Mbtu up to 1000 Mbtu; nearest 10 Mbtu between 1000 and 10,000 Mbtu; nearest 100 Mbtu above 10,000 Mbtu.
2) Cooling: For ton-hours, nearest ton-hours up to 1000 ton-hours; nearest 10 ton-hours between 1000 and 10,000 ton-hours; nearest 100 tons above 10,000 tons.

3. Flow:

a. Air: Nearest 1/10th of a cfm through 100 cfm; nearest cfm between 100 and 1000 cfm; nearest 10 cfm between 1000 and 10,000 cfm; nearest 100 cfm above 10,000 cfm.
b. Water: Nearest 1/10th gpm through 100 gpm; nearest gpm between 100 and 1000 gpm; nearest 10 gpm between 1000 and 10,000 gpm; nearest 100 gpm above 10,000 gpm.
c. Steam: Nearest 1/10th lb/hr through 100 lbs/hr; nearest lbs/hr between 100 and 1000 lbs/hr; nearest 10 lbs/hr above 1000 lbs/hr.

4. Gas:

a. Carbon Dioxide (ppm): Nearest ppm.
b. Carbon Monoxide (ppm): Nearest ppm.
c. Oxygen (Percentage): Nearest 1/10th of 1 percent.
d. Refrigerant (ppm): Nearest ppm.

5. Moisture (Relative Humidity):

a. Relative Humidity (Percentage): Nearest 1 percent.

6. Level: Nearest 1/100th of an inch through 10 inches; nearest 1/10 of an inch between 10 and 100 inches; nearest inch above 100 inches.
7. Speed:

a. Rotation (rpm): Nearest 1 rpm.
b. Velocity: Nearest 1/10th fpm through 100 fpm; nearest fpm between 100 and 1000 fpm; nearest 10 fpm above 1000 fpm.

8. Position, Dampers and Valves (Percentage Open): Nearest 1 percent.
9. Pressure:

a. Air, Ducts and Equipment: Nearest 1/10th in. w.c..
b. Space: Nearest 1/100th in. w.c..
c. Steam: Nearest 1/10th psig through 100 psig; nearest psig above 100 psig.

d. Water: Nearest 1/10 psig through 100 psig; nearest psig above 100 psig.

10. Temperature:

a. Air, Ducts and Equipment: Nearest 1/10th of a degree.
b. Outdoor: Nearest degree.
c. Space: Nearest 1/10th of a degree.
d. Chilled Water: Nearest 1/10th of a degree.
e. Condenser Water: Nearest 1/10th of a degree.
f. Heating Hot Water: Nearest degree.
g. Heat Recovery Runaround: Nearest 1/10th of a degree.
h. Steam: Nearest degree.

11. Vibration: Nearest 1/10th in/s.
12. Voltage: Nearest 1/10 volt up to 100 V; nearest volt above 100 V.

J. Control Stability: Control variables indicated within the following limits:

1. Flow:

a. Air, Ducts and Equipment, except Terminal Units: Within 5 percent of design flow rate.
b. Air, Terminal Units: Within 10 percent of design flow rate.
c. Water: Within 2 percent of design flow rate.
d. Steam: Within 5 percent of design flow rate.

2. Gas:

a. Carbon Dioxide: Within 50 ppm.
b. Carbon Monoxide: Within 5 percent of reading.
c. Oxygen: Within 5 percent of reading.

3. Moisture (Relative Humidity):

a. Air: Within 5 percent RH.
b. Space: Within 5 percent RH.
c. Outdoor: Within 5 percent RH.

4. Level: Within 5 percent of reading.
5. Pressure:

a. Air, Ducts and Equipment: 1 percent of instrument.
b. Space: Within 1 percent of instrument.
c. Water: Within 1 percent of instrument.
d. Steam: Within 1 percent of instrument.

6. Temperature, Dew Point:

a. Air: Within 1 deg F.
b. Space: Within 1 deg F.

7. Temperature, Dry Bulb:

a. Air: Within 2 deg F.
b. Space: Within 2 deg F.

c. Chilled Water: Within 1 deg F.
d. Condenser Water: Within 1 deg F.
e. Heating Hot Water: Within 2 deg F.
f. Energy Recovery Runaround Liquid: Within 1 deg F.

8. Temperature, Wet Bulb:

a. Air: Within 1 deg F.
b. Space: Within 1 deg F.

K. Environmental Conditions for Controllers, Gateways, and Routers:

1. Products shall operate without performance degradation under ambient environmental temperature, pressure and humidity conditions encountered for installed location.

a. If product alone cannot comply with requirement, install product in a protective enclosure that is isolated and protected from conditions impacting performance. Enclosure shall be internally insulated, electrically heated, cooled and ventilated as required by product and application.

2. Products shall be protected with enclosures satisfying the following minimum requirements unless more stringent requirements are indicated. Products not available with integral enclosures complying with requirements indicated shall be housed in protective secondary enclosures. Installed location shall dictate the following NEMA 250 enclosure requirements:

a. Outdoors, Protected: Type 2.
b. Outdoors, Unprotected: Type 4.
c. Indoors, Heated with Filtered Ventilation: Type 1.
d. Indoors, Heated with Non-Filtered Ventilation: Type 2.
e. Indoors, Heated and Air Conditioned: Type 1.
f. Mechanical Equipment Rooms:

1) Chiller and Boiler Rooms: Type 4.
2) Air-Moving Equipment Rooms: Type 1.

g. Localized Areas Exposed to Washdown: Type 4.
h. Within Duct Systems and Air-Moving Equipment Not Exposed to Possible Condensation: Type 2.
i. Within Duct Systems and Air-Moving Equipment Exposed to Possible Condensation: Type 4.
j. Hazardous Locations: Explosion-proof rating for condition.

L. Environmental Conditions for Instruments and Actuators:

1. Instruments and actuators shall operate without performance degradation under the ambient environmental temperature, pressure, humidity, and vibration conditions specified and encountered for installed location.

a. If instruments and actuators alone cannot comply with requirement, install instruments and actuators in protective enclosures that are isolated and protected from conditions impacting performance. Enclosure shall be internally insulated, electrically heated, cooled and ventilated as required by instrument and application.

2. Instruments, actuators and accessories shall be protected with enclosures satisfying the following minimum requirements unless more stringent requirements are indicated. Instruments and actuators not available with integral enclosures complying with requirements indicated shall be housed in protective secondary enclosures. Installed location shall dictate the following NEMA 250 enclosure requirements:

    a. Outdoors, Protected: Type 2.
    b. Outdoors, Unprotected: Type 4.
    c. Indoors, Heated with Filtered Ventilation: Type 1.
    d. Indoors, Heated with Non-Filtered Ventilation: Type 2.
    e. Indoors, Heated and Air-conditioned: Type 1.
    f. Mechanical Equipment Rooms:

        1) Chiller and Boiler Rooms: Type 4.
        2) Air-Moving Equipment Rooms: Type 1.

    g. Localized Areas Exposed to Washdown: Type 4.
    h. Within Duct Systems and Air-Moving Equipment Not Exposed to Possible Condensation: Type 2.
    i. Within Duct Systems and Air-Moving Equipment Exposed to Possible Condensation: Type 4.
    j. Hazardous Locations: Explosion-proof rating for condition.

M. DDC System Reliability:

1. Design, install and configure DDC controllers, gateways, routers, to yield a MTBF of at least 40,000 hours, based on a confidence level of at least 90 percent. MTBF value shall include any failure for any reason to any part of products indicated.
2. If required to comply with MTBF indicated, include DDC system and product redundancy to maintain DCC system, and associated systems and equipment that are being controlled, operational and under automatic control.
3. Critical systems and equipment that require a higher degree of DDC system redundancy than MTBF indicated shall be indicated on Drawings.

N. Electric Power Quality:

1. Power-Line Surges:

    a. Protect DDC system products connected to ac power circuits from power-line surges to comply with requirements of IEEE C62.41.
    b. Do not use fuses for surge protection.
    c. Test protection in the normal mode and in the common mode, using the following two waveforms:

        1) 10-by-1000-mic.sec. waveform with a peak voltage of 1500 V and a peak current of 60 A.
        2) 8-by-20-mic.sec. waveform with a peak voltage of 1000 V and a peak current of 500 A.

2. Power Conditioning:

    a. Protect DDC system products connected to ac power circuits from irregularities and noise rejection. Characteristics of power-line conditioner shall be as follows:

1) At 85 percent load, output voltage shall not deviate by more than plus or minus 1 percent of nominal when input voltage fluctuates between minus 20 percent to plus 10 percent of nominal.
2) During load changes from zero to full load, output voltage shall not deviate by more than plus or minus 3 percent of nominal.
3) Accomplish full correction of load switching disturbances within five cycles, and 95 percent correction within two cycles of onset of disturbance.
4) Total harmonic distortion shall not exceed 3-1/2 percent at full load.

3. Ground Fault: Protect products from ground fault by providing suitable grounding. Products shall not fail due to ground fault condition.

O. Backup Power Source:

1. HVAC systems and equipment served by a backup power source shall have associated DDC system products that control such systems and equipment also served from a backup power source.

P. UPS:

1. DDC system products powered by UPS units shall include the following:

a. Desktop workstations.
b. Printers.
c. Servers.
d. Gateways.
e. DDC controllers.

Q. Continuity of Operation after Electric Power Interruption:

1. Equipment and associated factory-installed controls, field-installed controls, electrical equipment, and power supply connected to building normal and backup power systems shall automatically return equipment and associated controls to operating state occurring immediately before loss of normal power, without need for manual intervention by operator when power is restored either through backup power source or through normal power if restored before backup power is brought online.

2.5 PANEL-MOUNTED, MANUAL OVERRIDE SWITCHES

A. Manual Override of Control Dampers:

1. Include panel-mounted, two-position, selector switch for each automatic control damper being controlled by DDC controller.
2. Label each switch with damper designation served by switch.
3. Label switch positions to indicate either "Manual" or "Auto" control signal to damper.
4. With switch in "Auto" position signal to control damper actuator shall be control loop output signal from DDC controller.
5. With switch in "Manual" position, signal to damper actuator shall be controlled at panel with either an integral or separate switch to include local control.

a. For Binary Control Dampers: Manual two-position switch shall have "Close" and "Open" switch positions indicated. With switch in "Close" position, damper shall close. With switch in "Open" position, damper shall open.

b. For Analog Control Dampers: A gradual switch shall have "Close" and "Open" switch limits indicated. Operator shall be able to rotate switch knob to adjust damper to any position from close to open.

6. DDC controller shall monitor and report position of each manual override selector switch. With switch placed in "manual" position, DDC controller shall signal an override condition to alert operator that damper is under manual, not automatic, control.
7. Terminal equipment including VAV units, fan-coil units, and unit heaters do not require manual override unless otherwise indicated by sequence of operation.

B. Manual Override of Control Valves:

1. Include panel-mounted, two-position, selector switch for each automatic control valve being controlled by a DDC controller.
2. Label each switch with valve designation served by switch.
3. Label switch positions to indicate either "Manual" or "Auto" control signal to valve.
4. With switch in "Auto" position, signal to control-valve actuator shall be a control loop output signal from DDC controller.
5. With switch in "Manual" position, signal to valve actuator shall be controlled at panel with either an integral or a separate switch to include local control.

a. For Binary Control Dampers: Manual two-position switch shall have "Close" and "Open" switch positions indicated. With switch in "Close" position, damper shall close. With switch in "Open" position, damper shall open.
b. For Analog Control Dampers: A gradual switch shall have "Open" and "Close" switch limits indicated. Operator shall be able to rotate switch knob to adjust damper to any position from close to open.

6. DDC controller shall monitor and report position of each manual override selector switch. With switch placed in "manual" position, DDC controller shall signal an override condition to alert operator that valve is under manual, not automatic, control.
7. Terminal equipment including VAV units, fan-coil units, and unit heaters do not require manual override unless otherwise indicated by sequence of operation.

2.6 SYSTEM ARCHITECTURE

A. System architecture shall consist of no more than two or three levels of LANs.

1. Level one LAN shall connect network controllers and operator workstations.
2. Level one or Level two LAN shall connect programmable application controllers to other programmable application controllers, and to network controllers.
3. Level two or Level three LAN shall connect application-specific controllers to programmable application controllers and network controllers.
4. Level two or Level three LAN shall connect application-specific controllers to application-specific controllers.

B. Minimum Data Transfer and Communication Speed:

1. LAN Connecting Operator Workstations and Network Controllers: 100 Mbps.
2. LAN Connecting Programmable Application Controllers: 1000 kbps.
3. LAN Connecting Application-Specific Controllers: 115,000 bps.

C. DDC system shall consist of dedicated and separated LANs that are not shared with other building systems and tenant data and communication networks.

D. System architecture shall be modular and have inherent ability to expand to not less than two times system size indicated with no impact to performance indicated.

E. System architecture shall perform modifications without having to remove and replace existing network equipment.

F. Number of LANs and associated communication shall be transparent to operator. All I/O points residing on any LAN shall be capable of global sharing between all system LANs.

G. System design shall eliminate dependence on any single device for system alarm reporting and control execution. Each controller shall operate independently by performing its' own control, alarm management and historical data collection.

H. Special Network Architecture Requirements:

1. Air-Handling Systems: For control applications of an air-handling system that consists of air-handling unit(s) and VAV terminal units, include a dedicated LAN of application-specific controllers serving VAV terminal units connected directly to controller that is controlling air-handling system air-handling unit(s). Basically, create a DDC system LAN that aligns with air-handling system being controlled.

2.7 DDC SYSTEM OPERATOR INTERFACES

A. Operator Means of System Access: Operator shall be able to access entire DDC system through any of multiple means, including, but not limited to, the following:

1. Desktop and portable workstation with hardwired connection through LAN port.
2. Portable operator terminal with hardwired connection through LAN port.
3. Portable operator workstation with wireless connection through LAN router.
4. Mobile device and application with secured wireless connection through LAN router or cellular data service.
5. Remote connection through web access.

B. Access to system, regardless of operator means used, shall be transparent to operator.

C. Network Ports: For hardwired connection of desktop or portable workstation. Network port shall be easily accessible, properly protected, clearly labeled, and installed at the following locations:

1. Each mechanical equipment room.
2. Each boiler room.
3. Each chiller room or outdoor chiller yard.
4. Each cooling tower location.
5. Each different roof level with roof-mounted air-handling units or rooftop units.
6. Security system command center.
7. Fire-alarm system command center.

D. Desktop Workstations:

1. Connect to DDC system Level one LAN through a communications port directly on LAN or through a communications port on a DDC controller.
2. Able to communicate with any device located on any DDC system LAN.

E. Portable Workstations:

1. Connect to DDC system Level one LAN through a communications port directly on LAN or through a communications port on a DDC controller.
2. Able to communicate with any device located on any DDC system LAN.
3. Connect to DDC system Level two or Level three LAN through a communications port on an application-specific controller, or a room temperature sensor connected to an application-specific controller.
4. Connect to system through a wireless router connected to Level one LAN.
5. Connect to system through a cellular data service.
6. Portable workstation shall be able to communicate with any device connected to any system LAN regardless of point of physical connection to system.
7. Monitor, program, schedule, adjust set points, and report capabilities of I/O connected anywhere in system.
8. Have dynamic graphic displays that are identical to desktop workstations.

F. POT:

1. Connect DDC controller through a communications port local to controller.
2. Able to communicate with any DDC system controller that is directly connected or with LAN or connected to DDC system.

G. Mobile Device:

1. Connect to system through a wireless router connected to LAN and cellular data service.
2. Able to communicate with any DDC controller connected to DDC system using a dedicated application and secure web access.

H. Telephone Communications:

1. Through use of a standard modem, operator shall be able to communicate with any device connected to any system LAN.
2. Have auto-dial and auto-answer communications to allow desktop and portable workstations and DDC controllers to communicate with remote workstations and remote DDC controllers via telephone lines.

a. Desktop and Portable Workstations:

1) Operators shall be able to perform all control functions, report functions, and database generation and modification functions as if directly connected to system LAN.
2) Have routines to automatically answer calls, and either file or display information sent remotely.
3) Communications taking place over telephone lines shall be completely transparent to operator.
4) Dial-up program shall maintain a user-definable cross-reference and associated telephone numbers so it is not required to remember or manually dial telephone numbers.

b. DDC Controllers:

1) Not have modems unless specifically indicated for a unique controller.
2) Controllers with modems shall automatically place calls to report critical alarms, or to upload trend and historical information for archiving.
3) Analyze and prioritize alarms to minimize initiation of calls.
4) Buffer noncritical alarms in memory and report them as a group of alarms, or until an operator manually requests an upload.

5) Make provisions for handling busy signals, no-answers, and incomplete data transfers.
6) Call default devices when communications cannot be established with primary devices.

I. Critical Alarm Reporting:

1. Operator-selected critical alarms shall be sent by DDC system to notify operator of critical alarms that require immediate attention.
2. DDC system shall send alarm notification to multiple recipients that are assigned for each alarm.
3. DDC system shall notify recipients by any or all means, including e-mail, text message and prerecorded phone message to mobile and landline phone numbers.

J. Simultaneous Operator Use: Capable of accommodating up to five simultaneous operators that are accessing DDC system through any one of operator interfaces indicated.

2.8 NETWORKS

A. Acceptable networks for connecting workstations, mobile devices, and network controllers include the following:

1. ATA 878.1, ARCNET.
2. CEA-709.1-C.
3. IP.
4. IEEE 8802-3, Ethernet.

B. Acceptable networks for connecting programmable application controllers include the following:

1. ATA 878.1, ARCNET.
2. CEA-709.1-C.
3. IP.
4. IEEE 8802-3, Ethernet.

C. Acceptable networks for connecting application-specific controllers include the following:

1. ATA 878.1, ARCNET.
2. CEA-709.1-C.
3. EIA-485A.
4. IP.
5. IEEE 8802-3, Ethernet.

2.9 NETWORK COMMUNICATION PROTOCOL

A. Network communication protocol(s) used throughout entire DDC system shall be open to Owner and available to other companies for use in making future modifications to DDC system.

B. ASHRAE 135 Protocol:

1. ASHRAE 135 communication protocol shall be sole and native protocol used throughout entire DDC system.

2. DDC system shall not require use of gateways except to integrate HVAC equipment and other building systems and equipment, not required to use ASHRAE 135 communication protocol.
3. If used, gateways shall connect to DDC system using ASHRAE 135 communication protocol and Project object properties and read/write services indicated by interoperability schedule.
4. Operator workstations, controllers and other network devices shall be tested and listed by BACnet Testing Laboratories.

C. CEA-709.1-C Protocol:

1. DDC system shall be an open implementation of LonWorks technology using CEA 709.1-C communication protocol and using LonMark SNVTs as defined in LonMark SNVT list exclusively for communication throughout DDC system.
2. LNS shall be used for all network management including addressing and binding of network variables.

   a. Final LNS database shall be submitted with Project closeout submittals.
   b. All devices shall be online and commissioned into LNS database.

3. All devices connected to DDC system network(s) shall use CEA-709.1-C protocol and be installed so SCPT output from any node on network can be bound to any other node in the domain.

D. Industry Standard Protocols:

1. DDC system shall use any one or a combination of the following industry standard protocols for network communication while complying with other DDC system requirements indicated:

   a. ASHRAE 135.
   b. CEA-709.1-C.
   c. Modbus Application Protocol Specification V1.1b.

2. Operator workstations and network controllers shall communicate through ASHRAE 135 or CEA-709.1-C protocol.
3. Portions of DDC system networks using ASHRAE 135 communication protocol shall be an open implementation of network devices complying with ASHRAE 135. Network devices shall be tested and listed by BACnet Testing Laboratories.
4. Portions of DDC system networks using CEA-709.1-C communication protocol shall be an open implementation of LonWorks technology using CEA-709.1-C communication protocol and using LonMark SNVTs as defined in LonMark SNVT list exclusively for DDC system.
5. Portions of DDC system networks using Modbus Application Protocol Specification V1.1b communication protocol shall be an open implementation of network devices and technology complying with Modbus Application Protocol Specification V1.1b.
6. Gateways shall be used to connect networks and network devices using different protocols.

2.10 DDC SYSTEM WIRELESS NETWORKS

A. Use an open industry standard and technology used by multiple DDC system manufacturers technology to create a wireless mesh network to provide wireless connectivity for network devices at multiple system levels including communications from programmable application controllers and application-specific controllers to temperature sensors and from network controllers to programmable application controllers and application-specific controllers.

B. Installer shall design wireless networks to comply with DDC system performance requirements indicated. Wireless network devices shall co-exist on same network with hardwired devices.

C. Hardwired controllers shall be capable of retrofit to wireless devices with no special software.

D. A wireless coordinator shall provide a wireless interface between programmable application controllers, application-specific controllers, and network controllers.

E. Wireless Coordinators:

1. Each wireless mesh network shall use wireless coordinator(s) for initiation and formation of network.
2. Use direct sequence spread spectrum RF technology.
3. Operate on the 2.4-GHz ISM Band.
4. Comply with IEEE 802.15.4 for low-power, low duty-cycle RF transmitting systems.
5. FCC compliant to 47 CFR 15, Subpart B, Class A.
6. Operate as a bidirectional transceiver with sensors and routers to confirm and synchronize data transmission.
7. Capable of communication with sensors and routers up to a maximum distance of 250 feet in line of sight.
8. Include visual indicators to provide diagnostic information required for operator verification of operation.

F. Wireless Routers:

1. Each wireless mesh network shall use wireless routers with any controller to provide a wireless interface to a network controller, through a wireless coordinator.
2. Use direct sequence spread spectrum RF technology.
3. Operate on the 2.4-GHz ISM Band.
4. Comply with IEEE 802.15.4 for low-power, low duty-cycle RF transmitting systems.
5. FCC compliant to 47 CFR 15, Subpart B, Class A.
6. Operate as a bidirectional transceiver with other mesh network devices to ensure network integrity.
7. Capable of communication with other mesh network devices at a maximum distance of 250 feet in line of sight.
8. Include indication for use in commissioning and troubleshooting.

G. Wireless Temperature Sensors:

1. Wireless temperature sensors shall sense and transmit room temperatures, temperature set point, room occupancy notification and low battery condition to an associated router.
2. Use direct sequence spread spectrum RF technology.
3. Operate on the 2.4-GHz ISM Band.
4. Comply with IEEE 802.15.4 for low-power, low duty-cycle RF transmitting systems.
5. FCC compliant to CFR 15, Subpart B, Class A.
6. Include set point adjustment between 55 to 85 deg F.
7. Multiple sensors shall be able to report to a router connected to a DDC controller for averaging or high and low selection.

H. One-to-One Wireless Network Receivers:

1. One-to-one wireless receivers shall receive wireless RF signals containing temperature data from multiple wireless room temperature sensors and communicate information to programmable application controllers or application-specific controllers.

a. Use direct sequence spread spectrum RF technology.
b. Operate on the 2.4-GHz ISM Band.
c. Comply with IEEE 802.15.4 for low-power, low duty-cycle RF transmitting systems.
d. FCC compliant to 47 CFR 15, Subpart B, Class A.
e. Operate as a bidirectional transceiver with the sensors to confirm and synchronize data transmission.
f. Capable of communication up to a distance of 200 feet.
g. Include visual indication of the following:

1) Power.
2) Receiver activity.
3) Wireless RF transmission from wireless sensors.
4) No transmission, weak signal, adequate signal or excellent signal.

I. One-to-One Wireless Network Sensors:

1. One-to-one wireless sensors shall sense and report room temperatures to one-to-one receiver.

a. Use direct sequence spread spectrum RF technology.
b. Operate on the 2.4-GHz ISM Band.
c. Comply with IEEE 802.15.4 for low-power, low duty-cycle RF transmitting systems.
d. FCC compliant to CFR 15, Subpart B, Class A.
e. Include set point adjustment between 55 to 85 deg F.

2.11 DESKTOP WORKSTATIONS

A. Description: A tower or all-in-one computer designed for normal use at a single, semipermanent location.

B. Manufacturers: Subject to compliance with requirements, provide products by one of the following:

1. Dell Technologies Inc.
2. HP Inc.
3. Lenovo Holding Co., Inc.; Lenovo Group Ltd.

C. Performance Requirements:

1. Performance requirements may dictate equipment exceeding minimum requirements indicated.
2. Energy Star compliant.

D. Wireless Ethernet, 802.11 a/b/g/n.

1. Optical Modem: Full duplex link for connection to optical fiber cable provided.
2. I/O Ports:

a. Two USB 3.0 ports on front panel, six on back panel, and three internal on motherboard.
b. One serial port.
c. One parallel port.
d. Two PS/2 ports.
e. One RJ-45.

f. One stereo line-in and headphone/line-out on back panel.
g. One microphone and headphone connector on front panel.
h. One IEEE 1394 on front and back panel with PCI-e card.
i. One ESATA port on back panel.

3. Battery: Life of at least three years to maintain system clock/calendar and ROM, as a minimum.

E. Keyboard:

1. 101 enhanced keyboard.
2. Full upper- and lowercase ASCII keyset, numeric keypad, dedicated cursor control keypad, and 12 programmable function keys.
3. Wireless operation within up to 72 inches in front of workstation.

F. Pointing Device:

1. Either a two- or three-button mouse.
2. Wireless operation within up to 72 inches in front of workstation.

G. Flat Panel Display Monitor:

1. Display:

a. Color display with 19-inch diagonal viewable area.
b. Digital or analog input signal.
c. Aspect Ratio: 16 to 9.
d. Antiglare display.
e. Dynamic Contrast Ratio: 50000 to 1.
f. Brightness: 250 cd/sq. m.
g. Tilt adjustable base.
h. Energy Star compliant.
i. Resolution: 1920 by 1080 pixels at 60 Hz with pixel size of 0.277 mm or smaller.
j. Number of Displays: Two.

H. Speakers:

1. Two, with individual controls for volume, bass and treble.
2. Signal to Noise Ratio: At least 65 dB.
3. Power: At least 4 W per speaker/channel.
4. Magnetic shielding to prevent distortion on the video monitor.

I. I/O Cabling: Include applicable cabling to connect I/O devices.

2.12 PORTABLE WORKSTATIONS

A. Description: A self-contained computer designed to allow for normal use in different locations and conditions.

B. Manufacturers: Subject to compliance with requirements, provide products by the following:

1. Dell Technologies Inc.

C. Performance Requirements:

1. Performance requirements may dictate equipment exceeding minimum requirements indicated.
2. Energy Star compliant.
3. Hardware and software shall support local down-loading to DDC controllers.
4. Data transfer rate to DDC controller shall be at network speed.

D. Input and Output Ports:

1. Serial port.
2. Shared port for external keyboard or mouse.
3. Four USB 3.0 ports.
4. Ethernet port.
5. HDMI port.
6. IEEE 1394 port.

E. Battery:

1. Capable of supporting operation of portable workstation for a minimum of 8 hours.
2. Battery life of at least three years.
3. Battery charge time of less than three hours.
4. Spare Battery(ies). One.

F. Keyboard:

1. 85-key backlit keyboard.
2. Full upper- and lowercase ASCII keyset.

G. Integral Pointing Device: Touchpad with two buttons. Gesture enabled.

H. Display:

1. 19-inch diagonal or larger high-definition WLED color display.
2. Antiglare screen.
3. 1920 by 1080 pixel resolution.
4. Brightness: 300 nits.

I. Network Interfaces:

1. Network Interface Card: Include card with connection, as application.

   a. 10-100-1000 base TX Ethernet with RJ45 connector port.
   b. 100 base FX Ethernet with SC or ST port.

2. Wireless:

   a. Internal with integrated antenna, capable of supporting 802.11 a/b/g/n.

J. Digital Video Disc Rewrite Recorder (DVD+/-RW):

1. Compatible with DVD disks and data, audio, recordable and rewritable compact disks.
2. 160-ms access time.

K. Accessories:

1. Nylon carrying case.

2. Docking station.
3. Mobile broadband card.
4. Wireless optical mouse.
5. 2 TB portable hard drive.
6. Light-sensitive web cam and noise-cancelling digital array microphone.
7. Category 6a patch cable. Minimum cable length shall be 6'.
8. HDMI cable. Minimum cable length shall be 6'.

2.13 PORTABLE OPERATOR TERMINAL

A. Description: Handheld device with integral keypad or touch screen operator interface.

B. Display: Multiple lines of text display for use in operator interaction with DDC system.

C. Cable: Flexible cable, at least 36 inches long, with a plug-in jack for connection to DDC controllers, network ports or instruments with an integral LAN port. As an alternative to hardwired connection, POT shall be accessible to DDC controllers through a wireless network connection.

D. POT shall be powered through network connection.

E. Connection of POT to DDC system shall not interrupt or interfere with normal network operation in any way, prevent alarms from being transmitted, or preclude central initiated commands and system modification.

F. POT shall give operator the ability to do the following:

1. Display and monitor BI point status.
2. Change BO point set point (on or off, open or closed).
3. Display and monitor analog point values.
4. Change analog control set points.
5. Command a setting of AO point.
6. Display and monitor I/O point in alarm.
7. Add a new or delete an existing I/O point.
8. Enable and disable I/O points, initiators, and programs.
9. Display and change time and date.
10. Display and change time schedules.
11. Display and change run-time counters and run-time limits.
12. Display and change time and event initiation.
13. Display and change control application and DDC parameters.
14. Display and change programmable offset values.
15. Access DDC controller initialization routines and diagnostics.

2.14 SERVERS

A. Description: x86-based permanently installed computer used for client-server computing.

B. Manufacturers: Subject to compliance with requirements, provide products by the following:

1. Dell Technologies Inc.

C. Mounting: Tower able to be rack-mounted.

D. Power: Single power supply, minimum 300 W.

E. Performance Requirements:

1. Performance requirements may dictate equipment exceeding minimum requirements indicated.
2. Energy Star compliant.
3. RAM:

   a. Capacity: 2 TB.

4. Redundant Array of Independent Disks: One configuration.
5. Drive Bays: Eight at 2.5 inches or eight at 3.5 inches.
6. Hard-Drive Storage: Two drives each with 2 TB storage and nominal rotational speed of 7200 rpm.
7. Network Interface: Dual port Gigabit Ethernet.
8. DVD +RW Drive.
9. Color, flat-screen display with 19-inch diagonal viewable area.
10. Keyboard and mouse.
11. Next-day on-site warranty for two-year period following Substantial Completion.

F. Servers shall include the following:

1. Full-feature backup server (server and backup minimum requirement).
2. Software licenses.
3. Cable installation between server(s) and network.

G. Web Server:

1. If required to be separate, include web server hardware and software to match, except backup server is not required.
2. Firewalls between server web and networks.
3. Password protection for access to server from web server.
4. Cable installation between the server(s) and building Ethernet network.

H. Power each server through a dedicated UPS unit.

2.15 PRINTERS

A. Color Inkjet Printer:

1. Manufacturers: Subject to compliance with requirements, provide products by the following:

   a. Hewlett-Packard Company.

2. Inkjet technology with true four-color printing (black, cyan, magenta, and yellow).
3. Print quality of 1200 by 600 dots per inch with black on inkjet paper and 4800 by 1200 dots per inch color printing on premium photo paper.
4. Capable of handling letter- and legal-size paper and overhead transparencies.
5. Duplex printing (printing on both sides of paper).

2.16 SYSTEM SOFTWARE

A. System Software Minimum Requirements:

1. Real-time multitasking and multiuser 64-bit operating system that allows concurrent multiple operator workstations operating and concurrent execution of multiple real-time programs and custom program development.
2. Operating system shall be capable of operating DOS and Microsoft Windows applications.
3. Database management software shall manage all data on an integrated and non-redundant basis. Additions and deletions to database shall be without detriment to existing data. Include cross linkages so no data required by a program can be deleted by an operator until that data have been deleted from respective programs.
4. Network communications software shall manage and control multiple network communications to provide exchange of global information and execution of global programs.
5. Operator interface software shall include day-to-day operator transaction processing, alarm and report handling, operator privilege level and data segregation control, custom programming, and online data modification capability.
6. Scheduling software shall schedule centrally based time and event, temporary, and exception day programs.

B. Operator Interface Software:

1. Minimize operator training through use of English language prorating and English language point identification.
2. Minimize use of a typewriter-style keyboard through use of a pointing device similar to a mouse.
3. Operator sign-off shall be a manual operation or, if no keyboard or mouse activity takes place, an automatic sign-off.
4. Automatic sign-off period shall be programmable from one to 60 minutes in one-minute increments on a per operator basis.
5. Operator sign-on and sign-off activity shall be recorded and sent to printer.
6. Security Access:

    a. Operator access to DDC system shall be under password control.
    b. An alphanumeric password shall be field assignable to each operator.
    c. Operators shall be able to access DDC system by entry of proper password.
    d. Operator password shall be same regardless of which computer or other interface means is used.
    e. Additions or changes made to passwords shall be updated automatically.
    f. Each operator shall be assigned an access level to restrict access to data and functions the operator is cable of performing.
    g. Software shall have at least five access levels.
    h. Each menu item shall be assigned an access level so that a one-for-one correspondence between operator assigned access level(s) and menu item access level(s) is required to gain access to menu item.
    i. Display menu items to operator with those capable of access highlighted. Menu and operator access level assignments shall be online programmable and under password control.

7. Data Segregation:

    a. Include data segregation for control of specific data routed to a workstation, to an operator or to a specific output device, such as a printer.
    b. Include at least 32 segregation groups.
    c. Segregation groups shall be selectable such as "fire points," "fire points on second floor," "space temperature points," "HVAC points," and so on.
    d. Points shall be assignable to multiple segregation groups. Display and output of data to printer or monitor shall occur where there is a match of operator or peripheral segregation group assignment and point segregations.

e. Alarms shall be displayed and printed at each peripheral to which segregation allows, but only those operators assigned to peripheral and having proper authorization level will be allowed to acknowledge alarms.
f. Operators and peripherals shall be assignable to multiple segregation groups and all assignments are to be online programmable and under password control.

8. Operators shall be able to perform commands including, but not limited to, the following:

a. Start or stop selected equipment.
b. Adjust set points.
c. Add, modify, and delete time programming.
d. Enable and disable process execution.
e. Lock and unlock alarm reporting for each point.
f. Enable and disable totalization for each point.
g. Enable and disable trending for each point.
h. Override control loop set points.
i. Enter temporary override schedules.
j. Define holiday schedules.
k. Change time and date.
l. Enter and modify analog alarm limits.
m. Enter and modify analog warning limits.
n. View limits.
o. Enable and disable demand limiting.
p. Enable and disable duty cycle.
q. Display logic programming for each control sequence.

9. Reporting:

a. Generated automatically and manually.
b. Sent to displays, printers and disk files.
c. Types of Reporting:

1) General listing of points.
2) List points currently in alarm.
3) List of off-line points.
4) List points currently in override status.
5) List of disabled points.
6) List points currently locked out.
7) List of items defined in a "Follow-Up" file.
8) List weekly schedules.
9) List holiday programming.
10) List of limits and deadbands.

10. Summaries: For specific points, for a logical point group, for an operator selected group(s), or for entire system without restriction due to hardware configuration.

C. Graphic Interface Software:

1. Include a full interactive graphical selection means of accessing and displaying system data to operator. Include at least five levels with the penetration path operator assignable (for example, site, building, floor, air-handling unit, and supply temperature loop). Native language descriptors assigned to menu items are to be operator defined and modifiable under password control.
2. Include a hierarchical-linked dynamic graphic operator interface for accessing and displaying system data and commanding and modifying equipment operation. Interface

shall use a pointing device with pull-down or penetrating menus, color and animation to facilitate operator understanding of system.

3. Include at least 10 levels of graphic penetration with the hierarchy operator assignable.
4. Descriptors for graphics, points, alarms and such shall be modified through operator's workstation under password control.
5. Graphic displays shall be online user definable and modifiable using the hardware and software provided.
6. Data to be displayed within a graphic shall be assignable regardless of physical hardware address, communication or point type.
7. Graphics are to be online programmable and under password control.
8. Points may be assignable to multiple graphics where necessary to facilitate operator understanding of system operation.
9. Graphics shall also contain software points.
10. Penetration within a graphic hierarchy shall display each graphic name as graphics are selected to facilitate operator understanding.
11. Back-trace feature shall permit operator to move upward in the hierarchy using a pointing device. Back trace shall show all previous penetration levels. Include operator with option of showing each graphic full screen size with back trace as horizontal header or by showing a "stack" of graphics, each with a back trace.
12. Display operator accessed data on the monitor.
13. Operator shall select further penetration using pointing device to click on a site, building, floor, area, equipment, and so on. Defined and linked graphic below that selection shall then be displayed.
14. Include operator with means to directly access graphics without going through penetration path.
15. Dynamic data shall be assignable to graphics.
16. Display points (physical and software) with dynamic data provided by DDC system with appropriate text descriptors, status or value, and engineering unit.
17. Use color, rotation, or other highly visible means, to denote status and alarm states. Color shall be variable for each class of points, as chosen by operator.
18. Points shall be dynamic with operator adjustable update rates on a per point basis from one second to over a minute.
19. For operators with appropriate privilege, points shall be commanded directly from display using pointing device.

    a. For an analog command point such as set point, current conditions and limits shall be displayed and operator can position new set point using pointing device.
    b. For a digital command point such as valve position, valve shall show its current state such as open or closed and operator could select alternative position using pointing device.
    c. Keyboard equivalent shall be available for those operators with that preference.

20. Operator shall be able to split or resize viewing screen into quadrants to show one graphic on one quadrant of screen and other graphics or spreadsheet, bar chart, word processing, curve plot and other information on other quadrants on screen. This feature shall allow real-time monitoring of one part of system while displaying other parts of system or data to better facilitate overall system operation.
21. Help Features:

    a. On-line context-sensitive help utility to facilitate operator training and understanding.
    b. Bridge to further explanation of selected keywords. Document shall contain text and graphics to clarify system operation.

        1) If help feature does not have ability to bridge on keywords for more information, a complete set of user manuals shall be provided in an indexed

word-processing program, which shall run concurrently with operating system software.

c. Available for Every Menu Item:

1) Index items for each system menu item.

22. Graphic generation software shall allow operator to add, modify, or delete system graphic displays.

a. Include libraries of symbols depicting HVAC symbols such as fans, coils, filters, dampers, valves pumps, and electrical symbols.
b. Graphic development package shall use a pointing device in conjunction with a drawing program to allow operator to perform the following:

1) Define background screens.
2) Define connecting lines and curves.
3) Locate, orient and size descriptive text.
4) Define and display colors for all elements.
5) Establish correlation between symbols or text and associated system points or other displays.

D. Project-Specific Graphics: Graphics documentation including, but not limited to, the following:

1. Site plan showing each building, and additional site elements, which are being controlled or monitored by DDC system.
2. Plan for each building floor, including interstitial floors, and each roof level of each building, showing the following:

a. Room layouts with room identification and name.
b. Locations and identification of all monitored and controlled HVAC equipment and other equipment being monitored and controlled by DDC system.
c. Location and identification of each hardware point being controlled or monitored by DDC system.

3. Control schematic for each of following, including a graphic system schematic representation with point identification, set point and dynamic value indication, sequence of operation and control logic diagram.
4. Graphic display for each piece of equipment connected to DDC system through a data communications link. Include dynamic indication of all points associated with equipment.
5. DDC system network riser diagram that shows schematic layout for entire system including all networks and all controllers, gateways operator workstations and other network devices.

E. Customizing Software:

1. Software to modify and tailor DDC system to specific and unique requirements of equipment installed, to programs implemented and to staffing and operational practices planned.
2. Online modification of DDC system configuration, program parameters, and database using menu selection and keyboard entry of data into preformatted display templates.
3. As a minimum, include the following modification capability:

a. Operator assignment shall include designation of operator passwords, access levels, point segregation and auto sign-off.

b. Peripheral assignment capability shall include assignment of segregation groups and operators to consoles and printers, designation of backup workstations and printers, designation of workstation header points and enabling and disabling of print-out of operator changes.
c. System configuration and diagnostic capability shall include communications and peripheral port assignments, DDC controller assignments to network, DDC controller enable and disable, assignment of command trace to points and application programs and initiation of diagnostics.
d. System text addition and change capability shall include English or native language descriptors for points, segregation groups and access levels and action messages for alarms, run time and trouble condition.
e. Time and schedule change capability shall include time and date set, time and occupancy schedules, exception and holiday schedules and daylight savings time schedules.
f. Point related change capability shall include the following:

1) System and point enable and disable.
2) Run-time enable and disable.
3) Assignment of points to segregation groups, calibration tables, lockout, and run time and to a fixed I/O value.
4) Assignment of alarm and warning limits.

g. Application program change capability shall include the following:

1) Enable and disable of software programs.
2) Programming changes.
3) Assignment of comfort limits, global points, time and event initiators, time and event schedules and enable and disable time and event programs.

4. Software shall allow operator to add points, or groups of points, to DDC system and to link them to energy optimization and management programs. Additions and modifications shall be online programmable using operator workstation, downloaded to other network devices and entered into their databases. After verification of point additions and associated program operation, database shall be uploaded and recorded on hard drive and disk for archived record.
5. Include high-level language programming software capability for implementation of custom DDC programs. Software shall include a compiler, linker, and up- and down-load capability.
6. Include a library of DDC algorithms, intrinsic control operators, arithmetic, logic and relational operators for implementation of control sequences. Also include, as a minimum, the following:

a. Proportional control (P).
b. Proportional plus integral (PI).
c. Proportional plus integral plus derivative (PID).
d. Adaptive and intelligent self-learning control.

1) Algorithm shall monitor loop response to output corrections and adjust loop response characteristics according to time constant changes imposed.
2) Algorithm shall operate in a continuous self-learning manner and shall retain in memory a stored record of system dynamics so that on system shut down and restart, learning process starts from where it left off.

7. Fully implemented intrinsic control operators including sequence, reversing, ratio, time delay, time of day, highest select AO, lowest select AO, analog controlled digital output, analog control AO, and digitally controlled AO.

8. Logic operators such as "And," "Or," "Not," and others that are part of a standard set available with a high-level language.
9. Arithmetic operators such as "Add," "Subtract," "Multiply," "Divide," and others that are part of a standard set available with a high-level language.
10. Relational operators such as "Equal To," "Not Equal To," "Less Than," "Greater Than," and others that are part of a standard set available with a high-level language.

F. Alarm Handling Software:

1. Include alarm handling software to report all alarm conditions monitored and transmitted through DDC controllers, gateways and other network devices.
2. Include first in, first out handling of alarms according to alarm priority ranking, with most critical alarms first, and with buffer storage in case of simultaneous and multiple alarms.
3. Alarm handling shall be active at all times to ensure that alarms are processed even if an operator is not currently signed on to DDC system.
4. Alarms display shall include the following:

    a. Indication of alarm condition such as "Abnormal Off," "Hi Alarm," and "Low Alarm."
    b. "Analog Value" or "Status" group and point identification with native language point descriptor such as "Space Temperature, Building 110, 2nd Floor, Room 212."
    c. Discrete per point alarm action message, such as "Call Maintenance Dept. Ext-5561."
    d. Include extended message capability to allow assignment and printing of extended action messages. Capability shall be operator programmable and assignable on a per point basis.

5. Alarms shall be directed to appropriate operator workstations, printers, and individual operators by privilege level and segregation assignments.
6. Send e-mail alarm messages to designated operators.
7. Send e-mail, page, text and voice messages to designated operators for critical alarms.
8. Alarms shall be categorized and processed by class.

    a. Class 1:

        1) Associated with fire, security and other extremely critical equipment monitoring functions; have alarm, trouble, return to normal, and acknowledge conditions printed and displayed.
        2) Unacknowledged alarms to be placed in unacknowledged alarm buffer.
        3) All conditions shall cause an audible sound and shall require individual acknowledgment to silence audible sound.

    b. Class 2:

        1) Critical, but not life-safety related, and processed same as Class 1 alarms, except do not require individual acknowledgment.
        2) Acknowledgement may be through a multiple alarm acknowledgment.

    c. Class 3:

        1) General alarms; printed, displayed and placed in unacknowledged alarm buffer queues.
        2) Each new alarm received shall cause an audible sound. Audible sound shall be silenced by "acknowledging" alarm or by pressing a "silence" key.
        3) Acknowledgement of queued alarms shall be either on an individual basis or through a multiple alarm acknowledgement.

4) Alarms returning to normal condition shall be printed and not cause an audible sound or require acknowledgment.

d. Class 4:

1) Routine maintenance or other types of warning alarms.
2) Alarms to be printed only, with no display, no audible sound and no acknowledgment required.

9. Include an unacknowledged alarm indicator on display to alert operator that there are unacknowledged alarms in system. Operator shall be able to acknowledge alarms on an individual basis or through a multiple alarm acknowledge key, depending on alarm class.
10. To ensure that no alarm records are lost, it shall be possible to assign a backup printer to accept alarms in case of failure of primary printer.

G. Reports and Logs:

1. Include reporting software package that allows operator to select, modify, or create reports using DDC system I/O point data available.
2. Each report shall be definable as to data content, format, interval and date.
3. Report data shall be sampled and stored on DDC controller, within storage limits of DDC controller, and then uploaded to archive on workstation or server for historical reporting.
4. Operator shall be able to obtain real-time logs of all I/O points by type or status, such as alarm, point lockout, or normal.
5. Reports and logs shall be stored on workstation and server hard drives in a format that is readily accessible by other standard software applications, including spreadsheets and word processing.
6. Reports and logs shall be readily printed and set to be printed either on operator command or at a specific time each day.

H. Standard Reports: Standard DDC system reports shall be provided and operator shall be able to customize reports later.

1. All I/O: With current status and values.
2. Alarm: All current alarms, except those in alarm lockout.
3. Disabled I/O: All I/O points that are disabled.
4. Alarm Lockout I/O: All I/O points in alarm lockout, whether manual or automatic.
5. Alarm Lockout I/O in Alarm: All I/O in alarm lockout that are currently in alarm.
6. Logs:

a. Alarm history.
b. System messages.
c. System events.
d. Trends.

I. Custom Reports: Operator shall be able to easily define any system data into a daily, weekly, monthly, or annual report. Reports shall be time and date stamped and shall contain a report title.

J. Tenant Override Reports: Prepare Project-specific reports.

1. Weekly report showing daily total time in hours that each tenant has requested after-hours HVAC.
2. Monthly report showing daily total time in hours that each tenant has requested after-hours HVAC.
3. Annual summary report that shows after-hours HVAC usage on a monthly basis.

K. HVAC Equipment Reports: Prepare Project-specific reports.

1. Chiller Report: Daily report showing operating conditions of each chiller according to ASHRAE 147, including, but not limited to, the following:

   a. Chilled-water entering temperature.
   b. Chilled-water leaving temperature.
   c. Chilled-water flow rate.
   d. Chilled-water inlet and outlet pressures.
   e. Evaporator refrigerant pressure and temperature.
   f. Condenser refrigerant pressure and liquid temperature.
   g. Condenser-water entering temperature.
   h. Condenser-water leaving temperature.
   i. Condenser-water flow rate.
   j. Refrigerant levels.
   k. Oil pressure and temperature.
   l. Oil level.
   m. Compressor refrigerant discharge temperature.
   n. Compressor refrigerant suction temperature.
   o. Addition of refrigerant.
   p. Addition of oil.
   q. Vibration levels or observation that vibration is not excessive.
   r. Motor amperes per phase.
   s. Motor volts per phase.
   t. Refrigerant monitor level (PPM).
   u. Purge exhaust time or discharge count.
   v. Ambient temperature (dry bulb and wet bulb).
   w. Date and time logged.

L. Utility Reports: Prepare Project-specific reports.

1. Electric Report:

   a. Include weekly report showing daily electrical consumption and peak electrical demand with time and date stamp for each meter.
   b. Include monthly report showing the daily electrical consumption and peak electrical demand with time and date stamp for each meter.
   c. Include annual report showing the monthly electrical consumption and peak electrical demand with time and date stamp for each meter.
   d. For each weekly, monthly and annual report, include sum total of submeters combined by load type, such as lighting, receptacles and HVAC equipment showing daily electrical consumption and peak electrical demand.
   e. For each weekly, monthly and annual report, include sum total of all submeters in building showing electrical consumption and peak electrical demand.

2. Natural Gas Report:

   a. Include weekly report showing daily natural gas consumption and peak natural gas demand with time and date stamp for each meter.
   b. Include monthly report showing the daily natural gas consumption and peak natural gas demand with time and date stamp for each meter.
   c. Include annual report showing the monthly natural gas consumption and peak natural gas demand with time and date stamp for each meter.
   d. For each weekly, monthly and annual report, include sum total of submeters combined by load type, such as boilers and service water heaters showing daily natural gas consumption and peak natural gas demand.

e. For each weekly, monthly and annual report, include sum total of all submeters in building showing natural gas consumption and peak natural gas demand.

3. Service Water Report:

a. Include weekly report showing daily service water consumption and peak service water demand with time and date stamp for each meter.
b. Include monthly report showing the daily service water consumption and peak service water demand with time and date stamp for each meter.
c. Include annual report showing the monthly service water consumption and peak service water demand with time and date stamp for each meter.
d. For each weekly, monthly and annual report, include sum total of submeters combined by load type, such as cooling tower makeup and irrigation showing daily service water consumption and peak service water demand.
e. For each weekly, monthly and annual report, include sum total of all submeters in building showing service water consumption and peak service water demand.

M. Energy Reports: Prepare Project-specific daily, weekly, monthly and annual energy reports.

1. Prepare report for each purchased energy utility, indicating the following:

a. Time period being reported with beginning and end date, and time indicated.
b. Consumption in units of measure commonly used to report specific utility consumption over time.
c. Gross area served by utility.
d. Consumption per unit area served using utility-specific unit of measure.
e. Cost per utility unit.
f. Utility cost per unit area.
g. Convert all utilities to a common energy consumption unit of measure and report for each utility.
h. Consumption per unit area using common unit of measure.

2. Prepare report for each renewable energy source, indicating the following:

a. Time period being reported with beginning and end date, and time indicated.
b. Harvested energy in units of measure commonly used to report specific harvested energy consumption over time.
c. Gross area served by renewable energy source.
d. Harvested energy per unit area served using specific unit of measure.
e. Cost per purchased utility unit displaced by renewable energy.
f. Cost savings attributed to harvested energy source.
g. Cost savings per unit area attributed to harvested energy.
h. Convert all renewable energy sources to a common energy consumption unit of measure and report for each.
i. Harvested energy per unit area using common unit of measure.

3. Prepare purchased energy utility report for each submetered area that indicates the following:

a. Time period being reported with beginning and end date, and time indicated.
b. Gross area served.
c. Energy consumption by energy utility type.
d. Energy consumption per unit area by energy utility type.
e. Total energy consumption of all utilities in common units of measure.
f. Total energy consumption of all utilities in common units of measure per unit area.

g. Unit energy cost by energy utility type.
h. Energy cost by energy utility type.
i. Energy cost per unit area by energy utility type.
j. Total cost of all energy utilities.
k. Total cost of all energy utilities per unit area.

4. Prepare Project total purchased energy utility report that combines all purchased energy utilities and all areas served. Project total energy report shall indicate the following:

a. Time period being reported with beginning and end date, and time indicated.
b. Gross area served.
c. Energy consumption by energy utility type.
d. Energy consumption per unit area by energy utility type.
e. Total energy consumption of all utilities in common units of measure.
f. Total energy consumption of all utilities in common units of measure per unit area.
g. Unit energy cost by energy utility type.
h. Energy cost by energy utility type.
i. Energy cost per unit area by energy utility type.
j. Total cost of all energy utilities.
k. Total cost of all energy utilities per unit area.

N. HVAC System Efficiency Reports: Prepare Project-specific monthly and annual HVAC system efficiency reports.

1. Prepare report for each chilled-water system, indicating the following:

a. Time period being reported with beginning and end date, and time indicated.
b. Cooling energy supplied during time period.
c. Power energy consumed during time period by cooling equipment used to produce cooling energy supplied. List power consumed for each individual piece of equipment in system and summed total of all equipment in system.
d. Energy efficiency coefficient of performance determined by dividing power energy consumed into cooling energy supplied.
e. Energy efficiency determined by dividing cooling energy supplied into power energy consumed.
f. Units of measure used in report shall be consistent with units indicated for system.

2. Prepare report for each hot-water system, indicating the following:

a. Time period being reported with beginning and end date, and time indicated.
b. Cooling energy supplied during time period.
c. Fuel consumed during time period by boilers used to produce heating energy supplied. List fuel consumed for each individual piece of equipment in system and summed total of all equipment in system.
d. Energy efficiency determined by dividing heating energy supplied into fuel energy consumed.
e. Units of measure used in report shall be consistent with units indicated for system.

3. Prepare report for each steam system, indicating the following:

a. Time period being reported with beginning and end date, and time indicated.
b. Cooling energy supplied during time period.
c. Fuel consumed during time period by boilers used to produce heating energy supplied. List fuel consumed for each individual piece of equipment in system and summed total of all equipment in system.

d. Energy efficiency determined by dividing heating energy supplied into fuel energy consumed.
e. Units of measure used in report shall be consistent with units indicated for system.

O. PUE Reports: Prepare Project-specific monthly and annual PUE reports.

1. Prepare separate report for each tenant.
2. Prepare Project PUE report that combines PUE and all tenants served.
3. Calculate PUE following guidelines in The Green Grid, White Paper No. 22.

P. Weather Reports:

1. Include daily report showing the following:

a. Daily minimum, maximum, and average outdoor dry-bulb temperature.
b. Daily minimum, maximum, and average outdoor wet-bulb temperature.
c. Daily minimum, maximum, and average outdoor dew point temperature.
d. Number of heating degree-days for each day calculated from a base temperature of 55 deg F.
e. Number of cooling degree-days for each day calculated from a base temperature of 65 deg F.
f. Daily minimum, maximum, and average outdoor carbon dioxide level.
g. Daily minimum, maximum, and average relative humidity.
h. Daily minimum, maximum, and average barometric pressure.
i. Daily minimum, maximum, and average wind speed and direction.

2. Include weekly report showing the following:

a. Daily minimum, maximum, and average outdoor dry-bulb temperature.
b. Daily minimum, maximum, and average outdoor wet-bulb temperature.
c. Daily minimum, maximum, and average outdoor dew point temperature.
d. Number of heating degree-days for each day calculated from a base temperature of 55 deg F.
e. Number of cooling degree-days for each day calculated from a base temperature of 65 deg F.
f. Weekly minimum, maximum, and average outdoor carbon dioxide level.
g. Daily minimum, maximum, and average relative humidity.
h. Daily minimum, maximum, and average barometric pressure.
i. Daily minimum, maximum, and average wind speed and direction.

3. Include monthly report showing the following:

a. Daily minimum, maximum, and average outdoor dry-bulb temperature.
b. Daily minimum, maximum, and average outdoor wet-bulb temperature.
c. Daily minimum, maximum, and average outdoor dew point temperature.
d. Number of heating degree-days for each day calculated from a base temperature of 55 deg F.
e. Number of cooling degree-days for each day calculated from a base temperature of 65 deg F.
f. Monthly minimum, maximum, and average outdoor carbon dioxide level.
g. Daily minimum, maximum, and average relative humidity.
h. Daily minimum, maximum, and average barometric pressure.
i. Daily minimum, maximum, and average wind speed and direction.

4. Include annual (12-month) report showing the following:

a. Monthly minimum, maximum, and average outdoor dry-bulb temperature.
b. Monthly minimum, maximum, and average outdoor wet-bulb temperature.
c. Monthly minimum, maximum, and average outdoor dew point temperature.
d. Number of heating degree-days for each month calculated from a base temperature of 55 deg F.
e. Number of cooling degree-days for each month calculated from a base temperature of 65 deg F.
f. Annual minimum, maximum, and average outdoor carbon dioxide level.
g. Monthly minimum, maximum, and average relative humidity.
h. Daily minimum, maximum, and average barometric pressure.
i. Daily minimum, maximum, and average wind speed and direction.

Q. Standard Trends:

1. Trend all I/O point present values, set points, and other parameters indicated for trending.
2. Trends shall be associated into groups, and a trend report shall be set up for each group.
3. Trends shall be stored within DDC controller and uploaded to hard drives automatically on reaching 75 of DDC controller buffer limit, or by operator request, or by archiving time schedule.
4. Preset trend intervals for each I/O point after review with Owner.
5. Trend intervals shall be operator selectable from 10 seconds up to 60 minutes. Minimum number of consecutive trend values stored at one time shall be 100 per variable.
6. When drive storage memory is full, most recent data shall overwrite oldest data.
7. Archived and real-time trend data shall be available for viewing numerically and graphically by operators.

R. Custom Trends: Operator shall be able to define a custom trend log for any I/O point in DDC system.

1. Each trend shall include interval, start time, and stop time.
2. Data shall be sampled and stored on DDC controller, within storage limits of DDC controller, and then uploaded to archive on workstation or server hard drives.
3. Data shall be retrievable for use in spreadsheets and standard database programs.

S. Programming Software:

1. Include programming software to execute sequences of operation indicated.
2. Include programming routines in simple and easy to follow logic with detailed text comments describing what the logic does and how it corresponds to sequence of operation.
3. Programming software shall be as follows:

a. Graphic Based: Programming shall use a library of function blocks made from preprogrammed code designed for DDC control systems.

1) Function blocks shall be assembled with interconnection lines that represent to control sequence in a flowchart.
2) Programming tools shall be viewable in real time to show present values and logical results of each function block.

4. Include means for detecting programming errors and testing software control strategies with a simulation tool before implementing in actual control. Simulation tool may be inherent with programming software or as a separate product.

T. Database Management Software:

1. Where a separate SQL database is used for information storage, DDC system shall include database management software that separates database monitoring and managing functions by supporting multiple separate windows.
2. Database secure access shall be accomplished using standard SQL authentication including ability to access data for use outside of DDC system applications.
3. Database management function shall include summarized information on trend, alarm, event, and audit for the following database management actions:

    a. Backup.
    b. Purge.
    c. Restore.

4. Database management software shall support the following:

    a. Statistics: Display database server information and trend, alarm, event, and audit information on database.
    b. Maintenance: Include method of purging records from trend, alarm, event and audit databases by supporting separate screens for creating a backup before purging, selecting database, and allowing for retention of a selected number of day's data.
    c. Backup: Include means to create a database backup file and select a storage location.
    d. Restore: Include a restricted means of restoring a database by requiring operator to have proper security level.

5. Database management software shall include information of current database activity, including the following:

    a. Ready.
    b. Purging record from a database.
    c. Action failed.
    d. Refreshing statistics.
    e. Restoring database.
    f. Shrinking a database.
    g. Backing up a database.
    h. Resetting Internet information services.
    i. Starting network device manager.
    j. Shutting down the network device manager.
    k. Action successful.

6. Database management software monitoring functions shall continuously read database information once operator has logged on.
7. Include operator notification through on-screen pop-up display and e-mail message when database value has exceeded a warning or alarm limit.
8. Monitoring settings window shall have the following sections:

    a. Allow operator to set and review scan intervals and start times.
    b. E-mail: Allow operator to create and review e-mail and phone text messages to be delivered when a warning or an alarm is generated.
    c. Warning: Allow operator to define warning limit parameters, set reminder frequency and link e-mail message.
    d. Alarm: Allow operator to define alarm limit parameters, set reminder frequency and link e-mail message.
    e. Database Login: Protect system from unauthorized database manipulation by creating a read access and a write access for each of trend, alarm, event and audit databases as well as operator proper security access to restore a database.

9. Monitoring settings taskbar shall include the following informational icons:

   a. Normal: Indicates by color and size, or other easily identifiable means that all databases are within their limits.
   b. Warning: Indicates by color and size, or other easily identifiable means that one or more databases have exceeded their warning limit.
   c. Alarm: Indicates by color and size, or other easily identifiable means that one or more databases have exceeded their alarm limit.

2.17 OFFICE APPLICATION SOFTWARE

A. Manufacturers: Subject to compliance with requirements, provide products by the following:

   1. Microsoft Corporation.

B. Include current version of office application software at time of Substantial Completion.

C. Office application software package shall include multiple separate applications and use a common platform for all applications, similar to Microsoft's "Office Professional."

   1. Database.
   2. E-mail.
   3. Presentation.
   4. Publisher.
   5. Spreadsheet.
   6. Word processing.

2.18 ASHRAE 135 GATEWAYS

A. Include BACnet communication ports, whenever available as an equipment OEM standard option, for integration via a single communication cable. BACnet-controlled plant equipment includes, but is not limited to, boilers, chillers, packaged rooftop air-handling units,> and variable-speed drives.

B. Include gateways to connect BACnet to legacy systems, existing non-BACnet devices, and existing non-BACnet DDC-controlled equipment, only when specifically requested and approved by Owner.

C. Include with each gateway an interoperability schedule showing each point or event on legacy side that BACnet "client" will read, and each parameter that BACnet network will write to. Describe this interoperability of BACnet services, or BIBBs, defined in ASHRAE 135, Annex K.

D. Gateway Minimum Requirements:

   1. Read and view all readable object properties on non-BACnet network to BACnet network and vice versa where applicable.
   2. Write to all writeable object properties on non-BACnet network from BACnet network and vice versa where applicable.
   3. Include single-pass (only one protocol to BACnet without intermediary protocols) translation from non-BACnet protocol to BACnet and vice versa.
   4. Comply with requirements of Data Sharing Read Property, Data Sharing Write Property, Device Management Dynamic Device Binding-B, and Device Management Communication Control BIBBs according to ASHRAE 135.

5. Hardware, software, software licenses, and configuration tools for operator-to-gateway communications.
6. Backup programming and parameters on CD media and the ability to modify, download, backup, and restore gateway configuration.

2.19 ASHRAE 135 PROTOCOL ANALYZER

A. Analyzer and required cables and fittings for connection to ASHRAE 135 network.

B. Analyzer shall include the following minimum capabilities:

1. Capture and store to a file data traffic on all network levels.
2. Measure bandwidth usage.
3. Filtering options with ability to ignore select traffic.

2.20 CEA-709.1-C NETWORK HARDWARE

A. Routers:

1. Network routers, including routers configured as repeaters, shall comply with requirements of CEA-709.1-C and include connection between two or more CEA-709.3 TP/FT-10 channels or between two or more CEA-709.3 TP/FT-10 channels and a TP/XF-1250 channel.
2. IP Routers:

   a. Perform layer three routing of CEA-709.1-C packets over an IP network according to CEA-852-B.
   b. Include appropriate connection to the IP network and connections to CEA-709.3 TP/FT-10 or TP/XF-1250 network.
   c. Support the Dynamic Host Configuration Protocol for IP configuration and use of an CEA-852-B Configuration Server (for CEA-852-B configuration), but shall not rely on these services for configuration.
   d. Capable of manual configuration via a console RS-232 port.

B. Gateways:

1. Perform bidirectional protocol translation from one non-CEA-709.1-C protocol to CEA-709.1-C.
2. Incorporate a network connection to a TP/FT-10 network according to CEA-709.3 and a connection for a non-CEA-709.1-C network.

2.21 WIRELESS ROUTERS FOR OPERATOR INTERFACE

A. Single-Band Wireless Routers:

1. Manufacturers: Subject to compliance with requirements, provide products by one of the following:

   a. Cisco Linksys.
   b. D-Link Corporation/D-Link Systems, Inc.
   c. NETGEAR Inc.

2. Description: High-speed router with integral Ethernet ports.
3. Technology: IEEE 802.11n; 2.4-GHz speed band.
4. Speed: Up to 300 Mbps.
5. Compatibility: IEEE 802.11n/g/b/a wireless devices.
6. Ethernet Ports: Four, gigabit (1000 Mbps).
7. Wireless Security: Wi-Fi Protected Access (WPA) and WPA2 according to IEEE 802.11i.

B. Dual-Band Wireless Routers:

1. Manufacturers: Subject to compliance with requirements, provide products by one of the following:

   a. Cisco Linksys.
   b. D-Link Corporation/D-Link Systems, Inc.
   c. NETGEAR Inc.

2. Description: High-speed, dual-band router with integral Ethernet ports and USB port.
3. Technology: IEEE 802.11n; 2.4- and 5-GHz speed bands.
4. Speed: Up to 300 Mbps on 2.4-GHz band and up to 450 Mbps on 5-GHz band.
5. Compatibility: IEEE 802.11n/g/b/a wireless devices.
6. Ethernet Ports: Four, gigabit (1000 Mbps).
7. USB Port: One, USB 2.0 or 3.0.
8. Wireless Security: Wi-Fi Protected Access (WPA) and WPA2 according to IEEE 802.11i.

2.22 DDC CONTROLLERS

A. DDC system shall consist of a combination of network controllers, programmable application controllers and application-specific controllers to satisfy performance requirements indicated.

B. DDC controllers shall perform monitoring, control, energy optimization and other requirements indicated.

C. DDC controllers shall use a multitasking, multiuser, real-time digital control microprocessor with a distributed network database and intelligence.

D. Each DDC controller shall be capable of full and complete operation as a completely independent unit and as a part of a DDC system wide distributed network.

E. Environment Requirements:

1. Controller hardware shall be suitable for the anticipated ambient conditions.
2. Controllers located in conditioned space shall be rated for operation at 32 to 120 deg F.
3. Controllers located outdoors shall be rated for operation at 40 to 150 deg F.

F. Power and Noise Immunity:

1. Controller shall operate at 90 to 110 percent of nominal voltage rating and shall perform an orderly shutdown below 80 percent of nominal voltage.
2. Operation shall be protected against electrical noise of 5 to 120 Hz and from keyed radios with up to 5 W of power located within 36 inches of enclosure.

G. DDC Controller Spare Processing Capacity:

1. Include spare processing memory for each controller. RAM, PROM, or EEPROM will implement requirements indicated with the following spare memory:

    a. Network Controllers: 50 percent.
    b. Programmable Application Controllers: Not less than 60 percent.
    c. Application-Specific Controllers: Not less than 70 percent.

2. Memory shall support DDC controller's operating system and database and shall include the following:

    a. Monitoring and control.
    b. Energy management, operation and optimization applications.
    c. Alarm management.
    d. Historical trend data of all connected I/O points.
    e. Maintenance applications.
    f. Operator interfaces.
    g. Monitoring of manual overrides.

H. DDC Controller Spare I/O Point Capacity: Include spare I/O point capacity for each controller as follows:

1. Network Controllers:

    a. 20 percent of each AI, AO, BI, and BO point connected to controller.
    b. Minimum Spare I/O Points per Controller:

        1) AIs: Two.
        2) AOs: Two.
        3) BIs: Three.
        4) BOs: Three.

2. Programmable Application Controllers:

    a. 20 percent of each AI, AO, BI, and BO point connected to controller.
    b. Minimum Spare I/O Points per Controller:

        1) AIs: Two.
        2) AOs: Two.
        3) BIs: Three.
        4) BOs: Three.

3. Application-Specific Controllers:

    a. 10 percent of each AI, AO, BI, and BO point connected to controller.
    b. Minimum Spare I/O Points per Controller:

        1) AIs: Two.
        2) AOs: Two.
        3) BIs: Two.
        4) BOs: Two.

I. Maintenance and Support: Include the following features to facilitate maintenance and support:

1. Mount microprocessor components on circuit cards for ease of removal and replacement.
2. Means to quickly and easily disconnect controller from network.

3. Means to quickly and easily access connect to field test equipment.
4. Visual indication that controller electric power is on, of communication fault or trouble, and that controller is receiving and sending signals to network.

J. General Requirements for CEA-709.1-C DDC Controllers:

1. Controllers shall be LonMark certified.
2. Distinguishable and accessible switch, button, or pin, when pressed shall broadcast its 48-bit Node ID and Program ID over network.
3. TP/FT-10 transceiver according to CEA-709.3 and connections for TP/FT-10 control network wiring.
4. TP/XF-1250 transceiver according to CEA-709.3 and connections for TP/XF-1250 control network wiring.
5. Communicate using CEA-709.1-C protocol.
6. Controllers configured into subnets, as required, to comply with performance requirements indicated.
7. Network communication through LNS network management and database standard for CEA-709.1-C network devices.
8. Locally powered, not powered through network connection.
9. Functionality required to support applications indicated, including, but not limited to, the following:

    a. Input and outputs indicated and as required to support sequence of operation and application in which it is used. SNVTs shall have meaningful names identifying the value represented by an SNVT. Unless an SNVT of an appropriate engineering type is unavailable, all network variables shall be of an SNVT with engineering units appropriate to value the variable represents.
    b. Configurable through SCPTs defined in LonMark SCPT List, operator-defined UCPTs, network configuration inputs (NCIs) of an SNVT type defined in LonMark SNVT List, NCIs of an operator-defined network variable type, or hardware settings on controller itself for all settings and parameters used by application in which it is used.

10. Programmable controllers shall conform to LonMark Interoperability Guidelines and have LonMark certification.

K. Input and Output Point Interface:

1. Hardwired input and output points shall connect to network, programmable application and application-specific controllers.
2. Input and output points shall be protected so shorting of point to itself, to another point, or to ground will not damage controller.
3. Input and output points shall be protected from voltage up to 24 V of any duration so that contact will not damage controller.
4. AIs:

    a. AIs shall include monitoring of low-voltage (zero- to 10-V dc), current (4 to 20 mA) and resistance signals from thermistor and RTD sensors.
    b. AIs shall be compatible with, and field configurable to, sensor and transmitters installed.
    c. Controller AIs shall perform analog-to-digital (A-to-D) conversion with a minimum resolution of 8 bits or better to comply with accuracy requirements indicated.
    d. Signal conditioning including transient rejection shall be provided for each AI.
    e. Capable of being individually calibrated for zero and span.

f. Incorporate common-mode noise rejection of at least 50 dB from zero to 100 Hz for differential inputs, and normal-mode noise rejection of at least 20 dB at 60 Hz from a source impedance of 10000 ohms.

5. AOs:

a. Controller AOs shall perform analog-to-digital (A-to-D) conversion with a minimum resolution of 8 bits or better to comply with accuracy requirements indicated.
b. Output signals shall have a range of 4 to 20 mA dc or zero- to 10-V dc as required to include proper control of output device.
c. Capable of being individually calibrated for zero and span.
d. AOs shall not exhibit a drift of greater than 0.4 percent of range per year.

6. BIs:

a. Controller BIs shall accept contact closures and shall ignore transients of less than 5-ms duration.
b. Isolation and protection against an applied steady-state voltage of up to 180-V ac peak.
c. BIs shall include a wetting current of at least 12 mA to be compatible with commonly available control devices and shall be protected against effects of contact bounce and noise.
d. BIs shall sense "dry contact" closure without external power (other than that provided by the controller) being applied.
e. Pulse accumulation input points shall comply with all requirements of BIs and accept up to 10 pulses per second for pulse accumulation. Buffer shall be provided to totalize pulses. Pulse accumulator shall accept rates of at least 20 pulses per second. The totalized value shall be reset to zero on operator's command.

7. BOs:

a. Controller BOs shall include relay contact closures or triac outputs for momentary and maintained operation of output devices.

1) Relay contact closures shall have a minimum duration of 0.1 second. Relays shall include at least 180 V of isolation. Electromagnetic interference suppression shall be provided on all output lines to limit transients to non-damaging levels. Minimum contact rating shall be 1 A at 24-V ac.
2) Triac outputs shall include at least 180 V of isolation. Minimum contact rating shall be 1 A at 24-V ac.

b. BOs shall include for two-state operation or a pulsed low-voltage signal for pulse-width modulation control.
c. BOs shall be selectable for either normally open or normally closed operation.
d. Include tristate outputs (two coordinated BOs) for control of three-point floating-type electronic actuators without feedback.
e. Limit use of three-point floating devices to VAV terminal unit control applications, and other applications indicated on Drawings,. Control algorithms shall operate actuator to one end of its stroke once every 12 hours for verification of operator tracking.

2.23 NETWORK CONTROLLERS

A. General Network Controller Requirements:

1. Include adequate number of controllers to achieve performance indicated.
2. System shall consist of one or more independent, standalone, microprocessor-based network controllers to manage global strategies indicated.
3. Controller shall have enough memory to support its operating system, database, and programming requirements.
4. Data shall be shared between networked controllers and other network devices.
5. Operating system of controller shall manage input and output communication signals to allow distributed controllers to share real and virtual object information and allow for central monitoring and alarms.
6. Controllersshall have a real-time clock.
7. Controller shall continually check status of its processor and memory circuits. If an abnormal operation is detected, controller shall assume a predetermined failure mode and generate an alarm notification.
8. Controllers shall be fully programmable.

B. Communication:

1. Network controllers shall communicate with other devices on DDC system Level one network.
2. Network controller also shall perform routing if connected to a network of programmable application and application-specific controllers.

C. Operator Interface:

1. Controller shall be equipped with a service communications port for connection to a portable operator's workstation or mobile device.
2. Local Keypad and Display:

   a. Equip controller with local keypad and digital display for interrogating and editing data.
   b. Use of keypad and display shall require security password.

D. Serviceability:

1. Controller shall be equipped with diagnostic LEDs or other form of local visual indication of power, communication, and processor.
2. Wiring and cable connections shall be made to field-removable, modular terminal strips or to a termination card connected by a ribbon cable.
3. Controller shall maintain BIOS and programming information in event of a power loss for at least 72 hours.

2.24 PROGRAMMABLE APPLICATION CONTROLLERS

A. General Programmable Application Controller Requirements:

1. Include adequate number of controllers to achieve performance indicated.
2. Controller shall have enough memory to support its operating system, database, and programming requirements.
3. Data shall be shared between networked controllers and other network devices.
4. Operating system of controller shall manage input and output communication signals to allow distributed controllers to share real and virtual object information and allow for central monitoring and alarms.
5. Controllers shall have a real-time clock.

6. Controller shall continually check status of its processor and memory circuits. If an abnormal operation is detected, controller shall assume a predetermined failure mode and generate an alarm notification.
7. Controllers shall be fully programmable.

B. Communication:

1. Programmable application controllers shall communicate with other devices on network.

C. Operator Interface:

1. Controller shall be equipped with a service communications port for connection to a portable operator's workstation or mobile device.
2. Local Keypad and Display:

   a. Equip controller with local keypad and digital display for interrogating and editing data.
   b. Use of keypad and display shall require security password.

D. Serviceability:

1. Controller shall be equipped with diagnostic LEDs or other form of local visual indication of power, communication, and processor.
2. Wiring and cable connections shall be made to field-removable, modular terminal strips or to a termination card connected by a ribbon cable.
3. Controller shall maintain BIOS and programming information in event of a power loss for at least 72 hours.

2.25 APPLICATION-SPECIFIC CONTROLLERS

A. Description: Microprocessor-based controllers, which through hardware or firmware design are dedicated to control a specific piece of equipment. Controllers are not fully user-programmable but are configurable and customizable for operation of equipment they are designed to control.

1. Capable of standalone operation and shall continue to include control functions without being connected to network.
2. Data shall be shared between networked controllers and other network devices.

B. Communication: Application-specific controllers shall communicate with other application-specific controller and devices on network, and to programmable application and network controllers.

C. Operator Interface: Controller shall be equipped with a service communications port for connection to a portable operator's workstation. Connection shall extend to port on space temperature sensor that is connected to controller.

D. Serviceability:

1. Controller shall be equipped with diagnostic LEDs or other form of local visual indication of power, communication, and processor.
2. Wiring and cable connections shall be made to field-removable, modular terminal strips or to a termination card connected by a ribbon cable.
3. Controller shall use nonvolatile memory and maintain all BIOS and programming information in event of power loss.

2.26 CONTROLLER SOFTWARE

A. General Controller Software Requirements:

1. Software applications shall reside and operate in controllers. Editing of applications shall occur at operator workstations.
2. I/O points shall be identified by up to 30-character point name and up to 16-character point descriptor. Same names shall be used at operator workstations.
3. Control functions shall be executed within controllers using DDC algorithms.
4. Controllers shall be configured to use stored default values to ensure fail-safe operation. Default values shall be used when there is a failure of a connected input instrument or loss of communication of a global point value.

B. Security:

1. Operator access shall be secured using individual security passwords and user names.
2. Passwords shall restrict operator to points, applications, and system functions as assigned by system manager.
3. Operator log-on and log-off attempts shall be recorded.
4. System shall protect itself from unauthorized use by automatically logging off after last keystroke. The delay time shall be operator-definable.

C. Scheduling: Include capability to schedule each point or group of points in system. Each schedule shall consist of the following:

1. Weekly Schedule:

   a. Include separate schedules for each day of week.
   b. Each schedule should include the capability for start, stop, optimal start, optimal stop, and night economizer.
   c. Each schedule may consist of up to 10 events.
   d. When a group of objects are scheduled together, include capability to adjust start and stop times for each member.

2. Exception Schedules:

   a. Include ability for operator to designate any day of the year as an exception schedule.
   b. Exception schedules may be defined up to a year in advance. Once an exception schedule is executed, it will be discarded and replaced by regular schedule for that day of week.

3. Holiday Schedules:

   a. Include capability for operator to define up to 99 special or holiday schedules.
   b. Schedules may be placed on scheduling calendar and will be repeated each year.
   c. Operator shall be able to define length of each holiday period.

D. System Coordination:

1. Include standard application for proper coordination of equipment.
2. Application shall include operator with a method of grouping together equipment based on function and location.
3. Group may then be used for scheduling and other applications.

E. Binary Alarms:

1. Each binary point shall be set to alarm based on operator-specified state.
2. Include capability to automatically and manually disable alarming.

F. Analog Alarms:

1. Each analog object shall have both high and low alarm limits.
2. Alarming shall be able to be automatically and manually disabled.

G. Alarm Reporting:

1. Operator shall be able to determine action to be taken in event of an alarm.
2. Alarms shall be routed to appropriate operator workstations based on time and other conditions.
3. Alarm shall be able to start programs, print, be logged in event log, generate custom messages, and display graphics.

H. Remote Communication:

1. System shall have ability to dial out in the event of an alarm.

I. Electric Power Demand Limiting:

1. Demand-limiting program shall monitor building or other operator-defined electric power consumption from signals connected to electric power meter or from a watt transducer or current transformer.
2. Demand-limiting program shall predict probable power demand such that action can be taken to prevent exceeding demand limit. When demand prediction exceeds demand limit, action will be taken to reduce loads in a predetermined manner. When demand prediction indicates demand limit will not be exceeded, action will be taken to restore loads in a predetermined manner.
3. Demand reduction shall be accomplished by the following means:

    a. Reset air-handling unit supply temperature set points.
    b. Reset space temperature set points.
    c. De-energize equipment based on priority.

4. Demand-limiting parameters, frequency of calculations, time intervals, and other relevant variables shall be based on the means by which electric power service provider computes demand charges.
5. Include demand-limiting prediction and control for any individual meter monitored by system or for total of any combination of meters.
6. Include means operator to make the following changes online:

    a. Addition and deletion of loads controlled.
    b. Changes in demand intervals.
    c. Changes in demand limit for meter(s).
    d. Maximum shutoff time for equipment.
    e. Minimum shutoff time for equipment.
    f. Select rotational or sequential shedding and restoring.
    g. Shed and restore priority.

7. Include the following information and reports, to be available on an hourly, daily, weekly, monthly and annual basis:

a. Total electric consumption.
b. Peak demand.
c. Date and time of peak demand.
d. Daily peak demand.

J. Maintenance Management: System shall monitor equipment status and generate maintenance messages based on operator-designated run-time, starts, and calendar date limits.

K. Sequencing: Include application software based on sequences of operation indicated to properly sequence chillers, boilers, and other applicable HVAC equipment.

L. Control Loops:

1. Support any of the following control loops, as applicable to control required:

a. Two-position (on/off, open/close, slow/fast) control.
b. Proportional control.
c. Proportional plus integral (PI) control.
d. Proportional plus integral plus derivative (PID) control.

1) Include PID algorithms with direct or reverse action and anti-windup.
2) Algorithm shall calculate a time-varying analog value used to position an output or stage a series of outputs.
3) Controlled variable, set point, and PID gains shall be operator-selectable.

e. Adaptive (automatic tuning).

M. Staggered Start: Application shall prevent all controlled equipment from simultaneously restarting after a power outage. Order which equipment (or groups of equipment) is started, along with the time delay between starts, shall be operator-selectable.

N. Energy Calculations:

1. Include software to allow instantaneous power or flow rates to be accumulated and converted to energy usage data.
2. Include an algorithm that calculates a sliding-window average (rolling average). Algorithm shall be flexible to allow window intervals to be operator specified (such as 15, 30, or 60 minutes).
3. Include an algorithm that calculates a fixed-window average. A digital input signal shall define start of window period (such as signal from utility meter) to synchronize fixed-window average with that used by utility.

O. Anti-Short Cycling:

1. BO points shall be protected from short cycling.
2. Feature shall allow minimum on-time and off-time to be selected.

P. On and Off Control with Differential:

1. Include an algorithm that allows a BO to be cycled based on a controlled variable and set point.
2. Algorithm shall be direct- or reverse-acting and incorporate an adjustable differential.

Q. Run-Time Totalization:

1. Include software to totalize run-times for all BI and BO points.
2. A high run-time alarm shall be assigned, if required, by operator.

2.27 ENCLOSURES

A. General Enclosure Requirements:

1. House each controller and associated control accessories in a enclosure. Enclosure shall serve as central tie-in point for control devices such as switches, transmitters, transducers, power supplies and transformers.
2. Do not house more than one controller in a single enclosure.
3. Include enclosure door with key locking mechanism. Key locks alike for all enclosures and include one pair of keys per enclosure.
4. Equip doors of enclosures housing controllers and components with analog or digital displays with windows to allow visual observation of displays without opening enclosure door.
5. Individual wall-mounted single-door enclosures shall not exceed 36 inches wide and 48 inches high.
6. Individual wall-mounted double-door enclosures shall not exceed 60 inches wide and 36 inches high.
7. Freestanding enclosures shall not exceed 48 inches wide and 72 inches high.
8. Include wall-mounted enclosures with brackets suitable for mounting enclosures to wall or freestanding support stand as indicated.
9. Supply each enclosure with a complete set of as-built schematics, tubing, and wiring diagrams and product literature located in a pocket on inside of door. For enclosures with windows, include pocket on bottom of enclosure.

B. Internal Arrangement:

1. Internal layout of enclosure shall group and protect pneumatic, electric, and electronic components associated with a controller, but not an integral part of controller.
2. Arrange layout to group similar products together.
3. Include a barrier between line-voltage and low-voltage electrical and electronic products.
4. Factory or shop install products, tubing, cabling and wiring complying with requirements and standards indicated.
5. Terminate field cable and wire using heavy-duty terminal blocks.
6. Include spare terminals, equal to not less than 20 percent of used terminals.
7. Include spade lugs for stranded cable and wire.
8. Install a maximum of two wires on each side of a terminal.
9. Include enclosure field power supply with a toggle-type switch located at entrance inside enclosure to disconnect power.
10. Include enclosure with a line-voltage nominal 20-A GFCI duplex receptacle for service and testing tools. Wire receptacle on hot side of enclosure disconnect switch and include with a 5-A circuit breaker.
11. Mount products within enclosure on removable internal panel(s).
12. Include products mounted in enclosures with engraved, laminated phenolic nameplates (black letters on a white background). The nameplates shall have at least 1/4-inch-high lettering.
13. Route tubing cable and wire located inside enclosure within a raceway with a continuous removable cover.
14. Label each end of cable, wire and tubing in enclosure following an approved identification system that extends from field I/O connection and all intermediate connections throughout length to controller connection.
15. Size enclosure internal panel to include at least 25 percent spare area on face of panel.

C. Environmental Requirements:

1. Evaluate temperature and humidity requirements of each product to be installed within each enclosure.
2. Calculate enclosure internal operating temperature considering heat dissipation of all products installed within enclosure and ambient effects (solar, conduction and wind) on enclosure.
3. Where required by application, include temperature-controlled electrical heat to maintain inside of enclosure above minimum operating temperature of product with most stringent requirement.
4. Where required by application, include temperature-controlled ventilation fans with filtered louver(s) to maintain inside of enclosure below maximum operating temperature of product with most stringent requirement.
5. Include temperature-controlled cooling within the enclosure for applications where ventilation fans cannot maintain inside temperature of enclosure below maximum operating temperature of product with most stringent requirement.
6. Where required by application, include humidity-controlled electric dehumidifier or cooling to maintain inside of enclosure below maximum relative humidity of product with most stringent requirement and to prevent surface condensation within enclosure.

D. Wall-Mounted, NEMA 250, Type 1:

1. Manufacturers: Subject to compliance with requirements, available manufacturers offering products that may be incorporated into the Work include, but are not limited to the following:

   a. Hoffman; brand of nVent Electrical plc.

2. Enclosure shall be NRTL listed according to UL 50 or UL 50E.
3. Construct enclosure of steel, not less than:

   a. Enclosure size less than 24 in.: 0.053 in. or 0.067 in. thick.
   b. Enclosure size 24 in. and larger: 0.067 in. or 0.093 in. thick.

4. Finish enclosure inside and out with polyester powder coating that is electrostatically applied and then baked to bond to substrate.

   a. Exterior color shall be manufacturer's standard.
   b. Interior color shall be manufacturer's standard.

5. Hinged door full size of front face of enclosure and supported using:

   a. Enclosures sizes less than 36 in. tall: Multiple butt hinges.
   b. Enclosures sizes 36 in. tall and larger: Continuous piano hinges.

6. Removable internal panel with a white polyester powder coating that is electrostatically applied and then baked to bond to substrate.

   a. Size less than 24 in.: Solid or Perforated steel, 0.053 in. thick.
   b. Size 24 in. and larger: Solid aluminum, 0.10 in. or steel, 0.093 in. thick.

7. Internal panel mounting hardware, grounding hardware and sealing washers.
8. Grounding stud on enclosure body.
9. Thermoplastic pocket on inside of door for record Drawings and Product Data.

E. Wall Mounted NEMA 250, Types 4 and 12:

1. Manufacturers: Subject to compliance with requirements, available manufacturers offering products that may be incorporated into the Work include, but are not limited to the following:

    a. Hoffman; brand of nVent Electrical plc.

2. Enclosure shall be NRTL listed according to UL 508A.
3. Seam and joints are continuously welded and ground smooth.
4. Where recessed enclosures are indicated, include enclosures with face flange for flush mounting.
5. Externally formed body flange around perimeter of enclosure face for continuous perimeter seamless gasket door seal.
6. Single-door enclosure sizes up to 60 inches tall by 36 inches wide.
7. Double-door enclosure sizes up to 36 inches tall by 60 inches wide.
8. Construct enclosure of steel, not less than the following:

    a. Size Less Than 24 Inches: 0.053 inch or 0.067 inch thick.
    b. Size 24 Inches and Larger: 0.067 inch thick.

9. Finish enclosure with polyester powder coating that is electrostatically applied and then baked to bond to substrate.

    a. Exterior color shall be manufacturer's standard.
    b. Interior color shall be manufacturer's standard.

10. Corner-formed door, full size of enclosure face, supported using multiple concealed hinges with easily removable hinge pins.

    a. Sizes through 24 Inches Tall: Two hinges.
    b. Sizes between 24 Inches through 48 Inches Tall: Three hinges.
    c. Sizes Larger 48 Inches Tall: Four hinges.

11. Double-door enclosures with overlapping door design to include unobstructed full-width access.

    a. Single-door enclosures 48 inches and taller, and all double-door enclosures, with three-point (top, middle and bottom) latch system.

12. Removable internal panel with a white polyester powder coating that is electrostatically applied and then baked to bond to substrate.

    a. Size Less Than 24 Inches: Solid or perforated steel, 0.053 inch thick.
    b. Size 24 Inches and Larger: Solid aluminum, 0.10 inch or steel, 0.093 inch thick.

13. Internal panel mounting studs with hardware, grounding hardware, and sealing washers.
14. Grounding stud on enclosure body.
15. Thermoplastic pocket on inside of door for record Drawings and Product Data.

F. Wall-Mounted, NEMA 250, Type 4X SS:

1. Manufacturers: Subject to compliance with requirements, available manufacturers offering products that may be incorporated into the Work include, but are not limited to the following:

    a. Hoffman; brand of nVent Electrical plc.

2. Enclosure shall be NRTL listed according to UL 508A.

3. Seam and joints are continuously welded and ground smooth.
4. Externally formed body flange around perimeter of enclosure face for continuous perimeter seamless gasket door seal.
5. Construct enclosure of Type 304 stainless steel, not less than the following:

    a. Size Less Than 24 Inches: 0.053 inch thick.
    b. Size 24 Inches and Larger: 0.067 inch thick.

6. Outside body and door of enclosure with brushed No. 4 finish.
7. Corner-formed door, full size of enclosure face, supported using multiple concealed hinges with easily removable hinge pins.

    a. Sizes through 24 InchesTall: Two hinges.
    b. Sizes between 24 Inchesthrough 48 InchesTall: Three hinges.
    c. Sizes Larger 48 InchesTall: Four hinges.

8. Corner-formed door, full size of enclosure face, supported using continuous piano hinge full length of door.
9. Doors fitted with three-point (top, middle, and bottom) latch system with single, heavy-duty, liquid-tight Type 316 stainless steel handle with integral locking mechanism.
10. Removable internal panel shall be 0.093-inch solid steel with a white polyester powder coating that is electrostatically applied and then baked to bond to substrate.
11. Internal panel mounting studs and hardware, grounding hardware, and sealing washers.
12. Install corrosion-resistant polyester vent drain in a stainless steel sleeve at the bottom of enclosure.
13. Include enclosure with stainless steel mounting brackets.

G. Freestanding, NEMA 250, Type 1:

1. Manufacturers: Subject to compliance with requirements, available manufacturers offering products that may be incorporated into the Work include, but are not limited to the following:

    a. Hoffman; brand of nVent Electrical plc.

2. Enclosure shall be NRTL listed according to UL 508A.
3. Seam and joints are continuously welded and ground smooth.
4. Externally formed body flange around perimeter of enclosure face.
5. Single-door enclosure sizes up to 84 inches tall by 36 inches wide.
6. Double-door enclosure sizes up to 84 inches tall by 72 inches wide.
7. Construct enclosure of steel, not less than 0.067 inch thick.
8. Finish enclosure with polyester powder coating that is electrostatically applied and then baked to bond to substrate.

    a. Exterior color shall be manufacturer's standard.
    b. Interior color shall be manufacturer's standard.

9. Corner-formed flush door, full size of enclosure face, supported using four concealed hinges with easily removable hinge pins.
10. Double-door enclosures with overlapping door design to include unobstructed full-width access.
11. Doors with three-point (top, middle, and bottom) latch system with single heavy-duty handle and integral locking mechanism.
12. Removable back covers.
13. Removable solid steel internal panel, 0.093 inch thick, with a white polyester powder coating that is electrostatically applied and then baked to bond to substrate.

14. Internal panel mounting studs with hardware, grounding hardware, and sealing washers.
15. Grounding stud on enclosure body.
16. Thermoplastic pocket on inside of door for record Drawings and Product Data.
17. Nominal 4-inch-tall integral lifting base, not less than 0.123 inch thick, with predrilled holes for attachment to mounting surface.
18. Each top end of enclosure fitted with lifting tabs, not less than 0.172 inch thick.
19. Internal rack-mount shelves and angles as required by application.

H. Freestanding, NEMA 250, Types 4 and 12:

1. Manufacturers: Subject to compliance with requirements, available manufacturers offering products that may be incorporated into the Work include, but are not limited to the following:

   a. Hoffman; brand of nVent Electrical plc.

2. Enclosure shall be NRTL listed according to UL 508A.
3. Seam and joints are continuously welded and ground smooth.
4. Externally formed body flange around perimeter of enclosure face.
5. Type 12 Enclosure Sizes:

   a. Single-door enclosure sizes up to 90 inches tall by 36 inches wide.
   b. Double-door enclosure sizes up to 90 inches tall by 72 inches wide.

6. Type 4 Enclosure Sizes:

   a. Single-door enclosure sizes up to 72 inches tall by 36 inches wide.

7. Construct enclosure of steel, not less than 0.093 inch thick.
8. Finish enclosure with polyester powder coating that is electrostatically applied and then baked to bond to substrate.

   a. Exterior color shall be manufacturer's standard.
   b. Interior color shall be manufacturer's standard.

9. Corner-formed door with continuous perimeter oil-resistant gasket supported using continuous piano hinge full length of door.
10. Doors fitted with three-point (top, middle, and bottom) latch system with latching rod rollers and single, heavy-duty oil-tight handle with integral locking mechanism.
11. Removable solid steel internal panel, 0.093 inch thick, with a white polyester powder coating that is electrostatically applied and then baked to bond to substrate.
12. Internal panel mounting studs with hardware, grounding hardware, and sealing washers.
13. Grounding stud on enclosure body.
14. Thermoplastic pocket on inside of door for record Drawings and Product Data.
15. Top of enclosure fitted with no fewer than two lifting eyes.
16. Internal rack-mount shelves and angles as required by application.

I. Accessories:

1. Electric Heater:

   a. Aluminum housing with brushed finish.
   b. Thermostatic control with adjustable set point from zero to 100 deg F.
   c. Capacity: 100, 200, 400, and 800 W as required by application.

d. Fan draws cool air from bottom of enclosure and passes air across thermostat and heating elements before being released into enclosure cavity. Heated air is discharged through the top of heater.

2. Ventilation Fans, Filtered Intake and Exhaust Grilles:

a. Number and size of fans, filters and grilles as required by application.
b. Compact cooling fans engineered for 50,000 hours of continuous operation without lubrication or service.
c. Fans capable of being installed on any surface and in any position within enclosure for spot cooling or air circulation.
d. Thermostatic control with adjustable set point from 32 to 140 deg F.
e. Airflow Capacity at Zero Pressure:

1) 4-Inch Fan: 100 cfm.
2) 6-Inch Fan: 240 cfm.
3) 10-Inch Fan: 560 cfm.

f. Maximum operating temperature of 158 deg F.
g. 4-inch fan thermally protected and provided with permanently lubricated ball-bearings.
h. 6- and 10-inch fans with ball-bearing construction and split capacitor motors thermally protected to avoid premature failure.
i. Dynamically balanced impellers molded from polycarbonate material.
j. Fan furnished with power cord and polarized plug for power connection.
k. Fan brackets, finger guards and mounting hardware provided with fans to complete installation.
l. Removable Intake and Exhaust Grilles: ABS plastic or stainless steel of size to match fan size and suitable for NEMA 250, Types 1 and 12 enclosures.
m. Filters for NEMA 250, Type 1 Enclosures: Washable foam or aluminum, of a size to match intake grille.
n. Filters for NEMA 250, Type 12 Enclosures: Disposable, of a size to match intake grille.

3. Air Conditioner:

a. Electric-powered, self-contained air-conditioning unit specially designed for electrical enclosures to maintain temperature inside enclosure below ambient temperature outside enclosure.
b. Thermostatic control with adjustable set point from 60 to 120 deg F.
c. Enclosure side or top mounting with unit capacity as required by application.
d. Designed for closed-loop cooling with continuous operation in ambient environments up to 125 deg F.
e. HFC refrigerant.
f. Reusable and washable air filter.
g. High-performance, industrial-grade, and high-efficiency fans.
h. Furnished with power cord and polarized plug for power connection.
i. Condensate management system with base pan side drain.
j. Mounting hardware, gaskets, mounting template and instruction manual furnished with unit.
k. Outdoor units equipped with head pressure control for low ambient operation, compressor heater, coated condenser coil and thermostat.

4. Thermoelectric Humidifier:

a. ABS plastic enclosure.

b. Capacity of 8 oz. of water per 24 hours.
c. Built-in drain captures moisture and plastic hose directs moisture to outside enclosure through a drain.
d. Controlled to maintain enclosure relative humidity at an adjustable set point.
e. Unit power supply shall be internally wired to enclosure electrical power source.

5. Framed Fixed Window Kit for NEMA 250, Types 4, 4X, and 12 Enclosures:

a. 0.25-inch-thick, scratch-resistant acrylic or polycarbonate window mounted in a metal frame matching adjacent door material.
b. Enclosure types, except NEMA 250 Type 1, shall have a continuous gasket material around perimeter of window and frame to provide watertight seal.
c. Window kit shall be factory or shop installed before shipment to Project.

6. Frameless Fixed Window Kit for NEMA 250, Type 1 Enclosures:

a. 0.125-inch-thick, polycarbonate window mounted in enclosure door material.
b. Window attached to door with screw fasteners and continuous strip of high-strength double-sided tape around window perimeter.
c. Window kit shall be factory or shop installed before shipment to Project.

7. Frame Fixed or Hinged Window Kit for NEMA 250, Types 1 and 12 Enclosures:

a. 0.25-inch-thick, scratch-resistant acrylic or polycarbonate window mounted in a metal frame matching adjacent door material.
b. Enclosure types, except NEMA 250 Type 1, shall have a continuous gasket material around perimeter of window and frame to provide watertight seal.
c. Window kit shall be factory or shop installed before shipment to Project.

8. Bar handle with keyed cylinder lock set.

2.28 RELAYS

A. General-Purpose Relays:

1. Manufacturers: Subject to compliance with requirements, available manufacturers offering products that may be incorporated into the Work include, but are not limited to the following:

a. Siemens Industry, Inc., Building Technologies Division.

2. Relays shall be heavy duty and rated for at least 10 A at 250-V ac and 60 Hz.
3. Relays shall be either double pole double throw (DPDT) or three-pole double throw, depending on the control application.
4. Use a plug-in-style relay with an eight-pin octal plug for DPDT relays and an 11-pin octal plug for three-pole double-throw relays.
5. Construct the contacts of either silver cadmium oxide or gold.
6. Enclose the relay in a clear transparent polycarbonate dust-tight cover.
7. Relays shall have LED indication and a manual reset and push-to-test button.
8. Performance:

a. Mechanical Life: At least 10 million cycles.
b. Electrical Life: At least 100,000 cycles at rated load.
c. Pickup Time: 15 ms or less.
d. Dropout Time: 10 ms or less.

e. Pull-in Voltage: 85 percent of rated voltage.
f. Dropout Voltage: 50 percent of nominal rated voltage.
g. Power Consumption: 2 VA.
h. Ambient Operating Temperatures: Minus 40 to 115 deg F.

9. Equip relays with coil transient suppression to limit transients to non-damaging levels.
10. Plug each relay into an industry-standard, 35-mm DIN rail socket. Plug all relays located in control panels into sockets that are mounted on a DIN rail.
11. Relay socket shall have screw terminals. Mold into the socket the coincident screw terminal numbers and associated octal pin numbers.

B. Multifunction Time-Delay Relays:

1. Manufacturers: Subject to compliance with requirements, available manufacturers offering products that may be incorporated into the Work include, but are not limited to the following:

a. Siemens Industry, Inc., Building Technologies Division.

2. Relays shall be continuous duty and rated for at least 10 A at 240-V ac and 60 Hz.
3. Relays shall be DPDT relay with up to eight programmable functions to provide on/off delay, interval and recycle timing functions.
4. Use a plug-in-style relay with either an 8- or 11-pin octal plug.
5. Construct the contacts of either silver cadmium oxide or gold.
6. Enclose the relay in a dust-tight cover.
7. Include knob and dial scale for setting delay time.
8. Performance:

a. Mechanical Life: At least 10 million cycles.
b. Electrical Life: At least 100,000 cycles at rated load.
c. Timing Ranges: Multiple ranges from 0.1 seconds to 100 minutes.
d. Repeatability: Within 2 percent.
e. Recycle Time: 45 ms.
f. Minimum Pulse Width Control: 50 ms.
g. Power Consumption: 5 VA or less at 120-V ac.
h. Ambient Operating Temperatures: Minus 40 to 115 deg F.

9. Equip relays with coil transient suppression to limit transients to non-damaging levels.
10. Plug each relay into an industry-standard, 35-mm DIN rail socket. Plug all relays located in control panels into sockets that are mounted on a DIN rail.
11. Relay socket shall have screw terminals. Mold into the socket the coincident screw terminal numbers and associated octal pin numbers.

C. Latching Relays:

1. Manufacturers: Subject to compliance with requirements, available manufacturers offering products that may be incorporated into the Work include, but are not limited to the following:

a. Siemens Industry, Inc., Building Technologies Division.

2. Relays shall be continuous duty and rated for at least 10 A at 250-V ac and 60 Hz.
3. Relays shall be either DPDT or three-pole double throw, depending on the control application.
4. Use a plug-in-style relay with a multibladed plug.
5. Construct the contacts of either silver cadmium oxide or gold.
6. Enclose the relay in a clear transparent polycarbonate dust-tight cover.

7. Performance:

    a. Mechanical Life: At least 10 million cycles.
    b. Electrical Life: At least 100,000 cycles at rated load.
    c. Pickup Time: 15 ms or less.
    d. Dropout Time: 10 ms or less.
    e. Pull-in Voltage: 85 percent of rated voltage.
    f. Dropout Voltage: 50 percent of nominal rated voltage.
    g. Power Consumption: 2 VA.
    h. Ambient Operating Temperatures: Minus 40 to 115 deg F.

8. Equip relays with coil transient suppression to limit transients to non-damaging levels.
9. Plug each relay into an industry-standard, 35-mm DIN rail socket. Plug all relays located in control panels into sockets that are mounted on a DIN rail.
10. Relay socket shall have screw terminals. Mold into the socket the coincident screw terminal numbers and associated octal pin numbers.

D. Current Sensing Relay:

1. Manufacturers: Subject to compliance with requirements, available manufacturers offering products that may be incorporated into the Work include, but are not limited to the following:

    a. Square D; Schneider Electric USA.

2. Monitors ac current.
3. Independent adjustable controls for pickup and dropout current.
4. Energized when supply voltage is present and current is above pickup setting.
5. De-energizes when monitored current is below dropout current.
6. Dropout current is adjustable from 50 to 95 percent of pickup current.
7. Include a current transformer, if required for application.
8. House current sensing relay and current transformer in its own enclosure. Use NEMA 250, Type 12 enclosure for indoors and NEMA 250, Type 4 for outdoors.

E. Combination On-Off Status Sensor and On-Off Relay:

1. Manufacturers: Subject to compliance with requirements, available manufacturers offering products that may be incorporated into the Work include, but are not limited to the following:

    a. Functional Devices Inc.

2. Description:

    a. On-off control and status indication in a single device.
    b. LED status indication of activated relay and current trigger.
    c. Closed-Open-Auto override switch located on the load side of the relay.

3. Performance:

    a. Ambient Temperature: Minus 30 to 140 deg F.
    b. Voltage Rating: Single-phase loads rated for 300-V ac. Three-phase loads rated for 600-V ac.

4. Status Indication:

a. Current Sensor: Integral sensing for single-phase loads up to 20 A and external solid or split sensing ring for three-phase loads up to 150 A.
b. Current Sensor Range: As required by application.
c. Current Set Point: Fixed or adjustable as required by application.
d. Current Sensor Output: As required by application.

1) Solid-state, single-pole double-throw contact rated for 30-V ac and dc and for 0.4 A.
2) Solid-state, single-pole double-throw contact rated for 120-V ac and 1.0 A.
3) Analog, zero- to 5- or 10-V dc.
4) Analog, 4 to 20 mA, loop powered.

5. Relay: Single-pole double-throw, continuous-duty coil; rated for 10-million mechanical cycles.
6. Enclosure: NEMA 250, Type 1 enclosure.

2.29 ELECTRICAL POWER DEVICES

A. Transformers:

1. Transformer shall be sized for the total connected load, plus an additional 25 percent of connected load.
2. Transformer shall be at least 40 VA.
3. Transformer shall have both primary and secondary fuses.

B. Power-Line Conditioner:

1. Manufacturers: Subject to compliance with requirements, available manufacturers offering products that may be incorporated into the Work include, but are not limited to the following:

a. Controlled Power Company; an Emerson company.

2. General Power-Line Conditioner Requirements:

a. Design to ensure maximum reliability, serviceability and performance.
b. Overall function of the power-line conditioner is to receive raw, polluted electrical power and purify it for use by electronic equipment. The power-line conditioner shall provide isolated, regulated, transient, and noise-free sinusoidal power to loads served.

3. Standards: NRTL listed per UL 1012.
4. Performance:

a. Single phase, continuous, 100 percent duty rated KVA/KW capacity. Design to supply power for linear or nonlinear, high crest factor, resistive and reactive loads.
b. Automatically regulate output voltage to within 2 percent or better with input voltage fluctuations of plus 10 to minus 20 percent of nominal when system is loaded 100 percent. Use Variable Range Regulation to obtain improved line voltage regulation when operating under less than full load conditions.

1) At 75 Percent Load: Output voltage automatically regulated to within 3 percent with input voltage fluctuations of plus 10 to minus 35 percent of nominal.
2) At 50 Percent Load: Output voltage automatically regulated to within 3 percent with input voltage fluctuations of plus 10 to minus 40 percent of nominal.

3) At 25 Percent Load: Output voltage automatically regulated to within 3 percent with input voltage fluctuations of plus 10 to minus 45 percent of nominal.

c. With input voltage distortion of up to 40 percent, limit the output voltage sine wave to a maximum harmonic content of 5 percent.
d. Automatically regulate output voltage to within 2.5 percent when load (resistive) changes from zero percent to 100 percent to zero percent.
e. Output voltage returns to 95 percent of nominal level within two cycles and to 100 percent within three cycles when the output is taken from no load to full resistive load or vice-versa. Recovery from partial resistive load changes is corrected in a shorter period of time.
f. K Factor: 30, designed to operate with nonlinear, non-sinusoidal, high crest factor loads without overheating.
g. Input power factor within 0.95 approaching unity with load power factor as poor as 0.6.
h. Attenuate load-generated odd current harmonics 23 dB at the input.
i. Electrically isolate the primary from the secondary. Meet isolation criteria as defined in NFPA 70, Article 250-5D.
j. Lighting and Surge Protection: Compares to UL 1449 rating of 330 V when subjected to Category B3 (6000 V/3000 A) combination waveform as established by IEEE C62.41.
k. Common-mode noise attenuation of 140 dB.
l. Transverse-mode noise attenuation of 120 dB.
m. With loss of input power for up to 16.6 ms, the output sine wave remains at usable ac voltage levels.
n. Reliability of 200,000 hours' MTBF.
o. At full load, when measured at 1-m distance, audible noise is not to exceed 54 dB.
p. Approximately 92 percent efficient at full load.

5. Transformer Construction:

a. Ferroresonant, dry type, convection cooled, 600V class. Transformer windings of Class H (220 deg C) insulated copper.
b. Use a Class H installation system throughout with operating temperatures not to exceed 150 deg C over a 40-deg C ambient temperature.
c. Configure transformer primary for multi-input voltage. Include input terminals for source conductors and ground.
d. Manufacture transformer core using M-6 grade, grain-oriented, stress-relieved transformer steel.
e. Configure transformer secondary in a 240/120-V split with a 208-V tap or straight 120 V, depending on power output size.
f. Electrically isolate the transformer secondary windings from the primary windings. Bond neutral conductor to cabinet enclosure and output neutral terminal.
g. Include interface terminals for output power hot, neutral and ground conductors.
h. Label leads, wires and terminals to correspond with circuit wiring diagram.
i. Vacuum impregnate transformer with epoxy resin.

6. Cabinet Construction:

a. Design for panel or floor mounting.
b. NEMA 250, Type 1, general-purpose, indoor enclosure.
c. Manufacture the cabinet from heavy gauge steel complying with UL 50.
d. Include a textured baked-on paint finish.

C. Transient Voltage Suppression and High-Frequency Noise Filter Unit:

1. Manufacturers: Subject to compliance with requirements, available manufacturers offering products that may be incorporated into the Work include, but are not limited to the following:

    a. Current Technology Inc.

2. The maximum continuous operating voltage shall be at least 125 percent.
3. The operating frequency range shall be 47 to 63 Hz.
4. Protection modes according to NEMA LS-1.
5. The rated single-pulse surge current capacity, for each mode of protection, shall be no less than the following:

    a. Line to Neutral: 45,000 A.
    b. Neutral to Ground: 45,000 A.
    c. Line to Ground: 45,000 A.
    d. Per Phase: 90,000 A.

6. Clamping voltages shall be in compliance with test and evaluation procedures defined in NEMA LS-1. Maximum clamping voltage shall be as follows:

    a. Line to Neutral: 360 V.
    b. Line to Ground: 360 V.
    c. Neutral to Ground: 360 V.

7. Electromagnetic interference and RF interference noise rejection or attenuation values shall comply with test and evaluation procedures defined in NEMA LS-1.

    a. Line to Neutral:

        1) 100 kHz: 42 dB.
        2) 1 MHz: 25 dB.
        3) 10 MHz: 21 dB.
        4) 100 MHz: 36 dB.

    b. Line to Ground:

        1) 100 kHz: 16 dB.
        2) 1 MHz: 55 dB.
        3) 10 MHz: 81 dB.
        4) 100 MHz: 80 dB.

8. Unit shall have LED status indicator that extinguishes to indicate a failure.
9. Unit shall be listed by an NRTL as a transient voltage surge suppressor per UL 1449, and as an electromagnetic interference filter per UL 1283.
10. Unit shall not generate any appreciable magnetic field.
11. Unit shall not generate an audible noise.

D. DC Power Supply:

1. Manufacturers: Subject to compliance with requirements, available manufacturers offering products that may be incorporated into the Work include, but are not limited to the following:

    a. Acopian Technical Company.

2. Plug-in style suitable for mating with a standard eight-pin octal socket. Include the power supply with a mating mounting socket.

3. Enclose circuitry in a housing.
4. Include both line and load regulation to ensure a stable output. To protect both the power supply and the load, power supply shall have an automatic current limiting circuit.
5. Performance:

    a. Output voltage nominally 25-V dc within 5 percent.
    b. Output current up to 100 mA.
    c. Input voltage nominally 120-V ac, 60 Hz.
    d. Load regulation within 0.5 percent from zero- to 100-mA load.
    e. Line regulation within 0.5 percent at a 100-mA load for a 10 percent line change.
    f. Stability within 0.1 percent of rated volts for 24 hours after a 20-minute warmup.

2.30 UNINTERRUPTABLE POWER SUPPLY (UPS) UNITS FOR WORKSTATIONS

A. 250 through 1000 VA:

1. Manufacturers: Subject to compliance with requirements, available manufacturers offering products that may be incorporated into the Work include, but are not limited to the following:

    a. Oneac-Powervar Solutions; Powervar, Inc.

2. UPS units shall provide continuous, regulated output power without using their batteries during brown-out, surge, and spike conditions.
3. Load served shall not exceed 75 percent of UPS rated capacity, including power factor of connected loads.

    a. Larger-capacity units shall be provided for systems with larger connected loads.
    b. UPS shall provide five minutes of battery power.

4. Performance:

    a. Input Voltage: Single phase, 120- or 230-V ac, compatible with field power source.
    b. Load Power Factor Range (Crest Factor): 0.65 to 1.0.
    c. Output Voltage: 101- to 132-V ac, while input voltage varies between 89 and 152-V ac.
    d. On Battery Output Voltage: Sine wave.
    e. Inverter overload capacity shall be minimum 150 percent for 30 seconds.
    f. Recharge time shall be a maximum of six hours to 90 percent capacity after full discharge to cutoff.
    g. Transfer Time: 6 ms.
    h. Surge Voltage Withstand Capacity: IEEE C62.41, Categories A and B; 6 kV/200 and 500 A; 100-kHz ringwave.

5. UPS shall be automatic during fault or overload conditions.
6. Unit with integral line-interactive, power condition topology to eliminate all power contaminants.
7. Include front panel with power switch and visual indication of power, battery, fault and temperature.
8. Unit shall include an audible alarm of faults and front panel silence feature.
9. Unit with four NEMA WD 1, NEMA WD 6 Configuration 5-15R receptacles.
10. UPS shall include dry contacts (digital output points) for low battery condition and battery-on (primary utility power failure) and connect the points to the DDC system.
11. Batteries shall be sealed lead-acid type and be maintenance free. Battery replacement shall be front accessible by user without dropping load.

12. Include tower models installed in ventilated cabinets to the particular installation location.

B. 1000 through 3000 VA:

1. Manufacturers: Subject to compliance with requirements, available manufacturers offering products that may be incorporated into the Work include, but are not limited to the following:

   a. Toshiba International Corporation.

2. UPS units shall provide continuous, regulated output power without using their batteries during brown-out, surge, and spike conditions.
3. Load served shall not exceed 75 percent of UPS rated capacity, including power factor of connected loads.

   a. Larger-capacity units, or multiple units, shall be provided for systems with larger connected loads.
   b. UPS shall provide five minutes of battery power.

4. Performance:

   a. Input Voltage: Single phase, 120-V ac, plus 20 to minus 30 percent.
   b. Power Factor: Minimum 0.97 at full load.
   c. Output Voltage: Single phase, 120-V ac, within 3 percent, steady state with rated output current of 10.0 A, 30.0-A peak.
   d. Inverter overload capacity shall be minimum 150 percent for 30 seconds.
   e. Recharge time shall be a maximum of eight hours to 90 percent capacity.

5. UPS bypass shall be automatic during fault or overload conditions.
6. UPS shall include dry contacts (digital output points) for low battery condition and battery-on (primary utility power failure) and connect the points to the DDC system.
7. Batteries shall be sealed lead-acid type and be maintenance free.
8. Include tower models installed in ventilated cabinets or rack models installed on matching racks, as applicable to the installation location and space availability/configuration.

2.31 CONTROL WIRE AND CABLE

A. Wire: Single conductor control wiring above 24 V.

1. Wire size shall be at least No. 18 AWG.
2. Conductor shall be 7/24 soft annealed copper strand with 2- to 2.5-inch lay.
3. Conductor insulation shall be 600 V, Type THWN or Type THHN, and 90 deg C according to UL 83.
4. Conductor colors shall be black (hot), white (neutral), and green (ground).
5. Furnish wire on spools.

B. Single Twisted Shielded Instrumentation Cable above 24 V:

1. Wire size shall be a minimum No. 18 AWG.
2. Conductors shall be a twisted, 7/24 soft annealed copper strand with a 2- to 2.5-inch lay.
3. Conductor insulation shall have a Type THHN/THWN or Type TFN rating.
4. Shielding shall be 100 percent type, 0.35/0.5-mil aluminum/Mylar tape, helically applied with 25 percent overlap, and aluminum side in with tinned copper drain wire.
5. Outer jacket insulation shall have a 600-V, 90-deg C rating and shall be Type TC cable.

6. For twisted pair, conductor colors shall be black and white. For twisted triad, conductor colors shall be black, red and white.
7. Furnish wire on spools.

C. Single Twisted Shielded Instrumentation Cable 24 V and Less:

1. Wire size shall be a minimum No. 18 AWG.
2. Conductors shall be a twisted, 7/24 soft annealed copper stranding with a 2- to 2.5-inch lay.
3. Conductor insulation shall have a nominal 15-mil thickness, constructed from flame-retardant PVC.
4. Shielding shall be 100 percent type, 1.35-mil aluminum/polymer tape, helically applied with 25 percent overlap, and aluminum side in with tinned copper drain wire.
5. Outer jacket insulation shall have a 300-V, 105-deg C rating and shall be Type PLTC cable.
6. For twisted pair, conductor colors shall be black and white. For twisted triad, conductor colors shall be black, red and white.
7. Furnish wire on spools.

D. LAN and Communication Cable: Comply with DDC system manufacturer requirements for network being installed.

1. Cable shall be balanced twisted pair.
2. Comply with the following requirements and for balanced twisted pair cable described in Section 260523 "Control-Voltage Electrical Power Cables."

a. Cable shall be plenum rated.
b. Cable shall have a unique color that is different from other cables used on Project.

2.32 RACEWAYS

A. Comply with requirements in Section 260533 "Raceways and Boxes for Electrical Systems" for electrical power raceways and boxes.

B. Comply with requirements in Section 270528 "Pathways for Communications Systems" for raceways for balanced twisted pair cables and optical fiber cables.

2.33 OPTICAL FIBER CABLE AND CONNECTORS

A. Comply with requirements in Section 271323 "Communications Optical Fiber Backbone Cabling" for optical fiber backbone cabling and connectors.

B. Comply with requirements in Section 271523 "Communications Optical Fiber Horizontal Cabling" for optical fiber horizontal cabling and connectors.

2.34 ACCESSORIES

A. Pneumatic Pressure Gauges:

1. Pressure gauges shall a 1.5-inch-diameter face for pressures up through 30 psig and 2.5-inch-diameter face for greater pressures.
2. Include separate gauges for branch pressure and main pressure lines.
3. White dial face with black printing.

4. Include 1-psig increment for scale ranges through 30 psig and 2-psig increment for larger ranges.
5. Accuracy: Within 1 percent of full-scale range.

B. Pressure Electric Switches:

1. Diaphragm-operated snap acting switch.
2. Set point adjustable from 3 to 20 psig.
3. Differential adjustable from 2 to 6 psig.
4. Rated for resistance loads at 120-V ac.
5. Body and switch housing shall be metal.

C. Damper Blade Limit Switches:

1. Sense positive open and/or closed position of the damper blades.
2. NEMA 250, Type 13, oil-tight construction.
3. Arrange for the mounting application.
4. Additional waterproof enclosure when required by its environment.
5. Arrange to prevent "over-center" operation.

D. I/P and E/P Transducers:

1. Commercial Grade:

a. Manufacturers: Subject to compliance with requirements, available manufacturers offering products that may be incorporated into the Work include, but are not limited to the following:

1) MAMAC Systems, Inc.

b. The transducer shall convert an AO signal to a stepped pneumatic signal. Unless otherwise required by the operating sequence, use a 3- to 15-psig pneumatic signal for pneumatic actuation.
c. Construct the entire assembly so that shock and vibration will neither harm the transducer nor affect its accuracy.
d. Transducer shall have auto/manual output switch, manual output control and an output pressure gauge.
e. Accuracy: Within 1.0 percent of the output span.
f. Linearity: Within 0.5 percent of the output span.
g. Output Capacity: Not less than 550 scim at 15 psig.
h. Transducer shall have separate zero and span calibration adjustments.
i. The transducer shall withstand up to 40 psig of supply pressure without damage.
j. For use on only modulating pneumatic outputs that are associated with terminal units, including fan-coil units, VAV units, unit heaters, etc...

2. Industrial Grade:

a. Manufacturers: Subject to compliance with requirements, available manufacturers offering products that may be incorporated into the Work include, but are not limited to the following:

1) Fisher Valves & Instruments; Emerson Process Management.

b. The transducer shall convert an AO signal to a proportional pneumatic signal. Unless otherwise required by the operating sequence, use a 3- to 15-psig pneumatic signal for pneumatic actuation. A stepped pneumatic signal is unacceptable.
c. Construct the entire assembly so that shock and vibration will neither harm the transducer nor affect its accuracy.
d. Suitable for operation in an ambient temperature range of minus 40 to 150 deg F.
e. Accuracy: Within 0.5 percent of the output span.
f. Linearity: Within 0.5 percent of the output span.
g. Output Capacity: Not less than 5 scfm.
h. Transducer shall have zero and span calibration adjustments.
i. The transducer shall withstand up to 50 psig of supply pressure without damage.
j. For use on all modulating pneumatic outputs, not requiring a commercial-grade transducer.

E. E/P Switch:

1. Construct the body of cast aluminum or brass; three pipe body (common, normally open, and normally closed).
2. Internal construction of steel, copper or brass.
3. Air Connections: Barb.
4. Rating of 30 psig when installed in systems below 25 psig and of 150 psig when installed in systems above 25 psig.
5. Include coil transient suppression.

F. Instrument Enclosures:

1. Manufacturers: Subject to compliance with requirements, available manufacturers offering products that may be incorporated into the Work include, but are not limited to the following:

a. Hoffman; brand of nVent Electrical plc.

2. Include instrument enclosure for secondary protection to comply with requirements indicated in "Performance Requirements" Article.
3. NRTL listed and labeled to UL 50.
4. Sized to include at least 25 percent spare area on subpanel.
5. Instrument(s) mounted within enclosure on internal subpanel(s).
6. Enclosure face with engraved, laminated phenolic nameplate for each instrument within enclosure.
7. Enclosures housing pneumatic instruments shall include main pressure gauge and a branch pressure gauge for each pneumatic device, installed inside.
8. Enclosures housing multiple instruments shall route tubing and wiring within enclosure in a raceway having a continuous removable cover.
9. Enclosures larger than 12 inches shall have a hinged full-size face cover.
10. Equip enclosure with lock and common key.

G. Manual Valves:

1. Needle Type:

a. Manufacturers: Subject to compliance with requirements, available manufacturers offering products that may be incorporated into the Work include, but are not limited to the following:

1) Parker Hannifin Corporation.

b. PTFE packing.
c. Construct of brass for use with copper and polyethylene tubing and of stainless steel for use with stainless steel tubing.
d. Aluminum T-bar handle.
e. Include tubing connections.

2. Ball Type:

a. Manufacturers: Subject to compliance with requirements, available manufacturers offering products that may be incorporated into the Work include, but are not limited to the following:

1) NIBCO INC.

b. Body: Bronze ASTM B62 or ASTM B61.
c. Ball: Type 316 stainless steel.
d. Stem: Type 316 stainless steel.
e. Seats: Reinforced PTFE.
f. Packing Ring: Reinforced PTFE.
g. Lever: Stainless steel with a vinyl grip.
h. 600 WOG.
i. Threaded end connections.

H. Wall-Mounted Portable Workstation Cabinet:

1. Manufacturers: Subject to compliance with requirements, available manufacturers offering products that may be incorporated into the Work include, but are not limited to the following:

a. Lowell Manufacturing Co.

2. Surface-mounted wall cabinet for tilt-out operation of laptop computers and large-format mobile devices.
3. Cabinet shall have a load limit of 50 lb.
4. Cabinet shall include the following:

a. Oil-filled dampers for controlled lowering of equipment to operational position.
b. 3RU EIA mounting rails.
c. Removable laptop shelf.
d. Separate top compartment with mounting area, hinged rail and security lock.
e. Front ventilation slots.
f. Knockouts for conduit connections on top and bottom of cabinet.

5. Cabinet shall be constructed of steel and painted with a powder-coat epoxy.
6. Inside center of backbox shall have provision to mount a field-furnished and -installed, single gang electrical outlet box.

2.35 IDENTIFICATION

A. Control Equipment, Instruments, and Control Devices:

1. Laminated acrylic or melamine plastic sign bearing unique identification.

a. Include instruments with unique identification identified by equipment being controlled or monitored, followed by point identification.

2. Letter size shall be as follows:

    a. Operator Workstations: Minimum of 0.5 inch high.
    b. Servers: Minimum of 0.5 inch high.
    c. Printers: Minimum of 0.5 inch high.
    d. DDC Controllers: Minimum of 0.5 inch high.
    e. Gateways: Minimum of 0.5 inch high.
    f. Repeaters: Minimum of 0.5 inch high.
    g. Enclosures: Minimum of 0.5 inch high.
    h. Electrical Power Devices: Minimum of 0.25 inch high.
    i. UPS units: Minimum of 0.5 inch high.
    j. Accessories: Minimum of 0.25 inch high.
    k. Instruments: Minimum of 0.25 inch high.
    l. Control Damper and Valve Actuators: Minimum of 0.25 inch high.

3. Legend shall consist of white lettering on black background.
4. Laminated acrylic or melamine plastic sign shall be engraved phenolic consisting of three layers of rigid laminate. Top and bottom layers are color-coded black with contrasting white center exposed by engraving through outer layer and shall be fastened with drive pins.
5. Instruments, control devices, and actuators with Project-specific identification tags having unique identification numbers following requirements indicated and provided by original manufacturer do not require additional identification.

B. Valve Tags:

1. Brass tags and brass chains attached to valve.
2. Tags shall be at least 1.5 inches in diameter.
3. Include tag with unique valve identification indicating control influence such as flow, level, pressure, or temperature; followed by location of valve, and followed by three-digit sequential number. For example: TV-1.001.
4. Valves with Project-specific identification tags having unique identification numbers following requirements indicated and provided by original manufacturer do not require an additional tag.

C. Raceway and Boxes:

1. Comply with requirements for identification specified in Section 260553 "Identification for Electrical Systems."
2. Paint cover plates on junction boxes and conduit same color as the tape banding for conduits. After painting, label cover plate "HVAC Controls," using an engraved phenolic tag.
3. For raceways housing pneumatic tubing, add a phenolic tag labeled "HVAC Instrument Air Tubing."
4. For raceways housing air signal tubing, add a phenolic tag labeled "HVAC Air Signal Tubing."

D. Equipment Warning Labels:

1. Self-adhesive label with pressure-sensitive adhesive back and peel-off protective jacket.
2. Lettering size shall be at least 14-point type with white lettering on red background.
3. Warning label shall read "CAUTION-Equipment operated under remote automatic control and may start or stop at any time without warning. Switch electric power disconnecting means to OFF position before servicing."
4. Lettering shall be enclosed in a white line border. Edge of label shall extend at least 0.25 inchbeyond white border.

2.36 SOURCE QUALITY CONTROL

A. Testing Agency: Engage a qualified testing agency to evaluate the following according to industry standards for each product, and to verify DDC system reliability specified in performance requirements:

1. DDC controllers.
2. Gateways.
3. Routers.
4. Operator workstations.

B. Product(s) and material(s) will be considered defective if they do not pass tests and inspections.

C. Prepare test and inspection reports.

PART 3 - EXECUTION

3.1 EXAMINATION

A. Examine substrates and conditions for compliance with requirements for installation tolerances and other conditions affecting performance of the Work.

1. Verify compatibility with and suitability of substrates.

B. Examine roughing-in for products to verify actual locations of connections before installation.

1. Examine roughing-in for instruments installed in piping to verify actual locations of connections before installation.
2. Examine roughing-in for instruments installed in duct systems to verify actual locations of connections before installation.

C. Examine walls, floors, roofs, and ceilings for suitable conditions where product will be installed.

D. Prepare written report, endorsed by Installer, listing conditions detrimental to performance of the Work.

E. Proceed with installation only after unsatisfactory conditions have been corrected.

3.2 DDC SYSTEM INTERFACE WITH OTHER SYSTEMS AND EQUIPMENT

A. Communication Interface to Equipment with Integral Controls:

1. DDC system shall have communication interface with equipment having integral controls and having a communication interface for remote monitoring or control.
2. Equipment to Be Connected:

a. Domestic water booster pumps specified in Section 221123.13 "Domestic-Water Packaged Booster Pumps."
b. Air-terminal units specified in Section 233600 "Air Terminal Units."
c. Kitchen hoods specified in Section 233813 "Commercial-Kitchen Hoods."
d. Boilers specified in Section 235213 "Electric Boilers."
e. Boilers specified in Section 235216 "Condensing Boilers."

f. Boilers specified in Section 235223 "Cast-Iron Boilers."
g. Boilers specified in Section 235233 "Water-Tube Boilers."
h. Boilers specified in Section 235239 "Fire-Tube Boilers."
i. Feedwater equipment specified in Section 235313 "Boiler Feedwater Pumps."
j. Deaerators specified in Section 235316 "Deaerators."
k. Chillers specified in Section 236413.13 "Direct-Fired Absorption Water Chillers."
l. Chillers specified in Section 236413.16 "Indirect-Fired Absorption Water Chillers."
m. Chillers specified in Section 236416 "Centrifugal Water Chillers."
n. Chillers specified in Section 236423.13 "Air-Cooled, Scroll Water Chillers."
o. Chillers specified in Section 236423.16 "Water-Cooled, Scroll Water Chillers."
p. Chillers specified in Section 236426.13 "Air-Cooled, Rotary-Screw Water Chillers."
q. Chillers specified in Section 236426.16 "Water-Cooled, Rotary-Screw Water Chillers."
r. Cooling towers specified in Section 236513.13 "Open-Circuit, Forced-Draft Cooling Towers."
s. Cooling towers specified in Section 236513.16 "Closed-Circuit, Forced-Draft Cooling Towers."
t. Cooling towers specified in Section 236514.13 "Open-Circuit, Induced-Draft, Counterflow Cooling Towers."
u. Cooling towers specified in Section 236514.14 "Open-Circuit, Induced-Draft, Crossflow Cooling Towers."
v. Cooling towers specified in Section 236514.16 "Closed-Circuit, Induced-Draft, Counterflow Cooling Towers."
w. Cooling towers specified in Section 236514.17 "Closed-Circuit, Induced-Draft, Combined-Flow Cooling Towers."
x. Heat wheels and heat exchangers specified in Section 237223.## "Air-to-Air Energy Recovery Equipment."
y. Air-handling units specified in Section 237313.## "Modular Indoor Central-Station Air-Handling Units."
z. Roof-top units specified in Section 237416.## "Packaged, Outdoor, Central-Station Air-Handling Units."
aa. Dedicated outdoor-air units specified in Section 237433 "Dedicated Outdoor-Air Units."
bb. Packaged terminal air-conditioners specified in Section 238113.11 "Packaged Terminal Air-Conditioners, Through-Wall Units."
cc. Packaged terminal air-conditioners specified in Section 238113.12 "Packaged Terminal Air-Conditioners, Freestanding Units."
dd. Packaged terminal air-conditioners specified in Section 238113.13 "Packaged Terminal Air-Conditioners, Outdoor, Wall-Mounted Units."
ee. Computer-room air-conditioning units specified in Section 238123.11 "Small-Capacity (6 Tons (21 kW) and Smaller), Computer-Room Air-Conditioners, Floor-Mounted Units."
ff. Computer-room air-conditioning units specified in Section 238123.12 "Large-Capacity (7 Tons (25 kW) and Larger), Computer-Room Air-Conditioners, Floor-Mounted Units."
gg. Computer-room air-conditioning units specified in Section 238123.13 "Computer-Room Air Conditioners, Ceiling-Mounted Units."
hh. Computer-room air-conditioning units specified in Section 238123.14 "Computer-Room Air Conditioners, Console Units."
ii. Computer-room, rack-mounted cooling equipment specified in Section 238123.18 "Computer-Room, Rack-Cooling Equipment."
jj. Split-System Air-Conditioners specified in Section 238126.
kk. Variable-Refrigerant-Flow HVAC Systems specified in Section 238129.
ll. Fan-coil units specified in Section 238219 "Fan Coil Units."
mm. Unit ventilators specified in Section 238223 "Unit Ventilators."

nn. Wetted-element humidifiers specified in Section 238413.16 "Wetted-Element Humidifiers."
oo. Atomizing humidifiers specified in Section 238413.19 "Atomizing Humidifiers."
pp. Direct-steam-injection humidifiers specified in Section 238413.23 "Direct-Steam-Injection Humidifiers."
qq. Self-contained steam humidifiers specified in Section 238413.29 "Self-Contained Steam Humidifiers."
rr. Heat exchanger humidifiers specified in Section 238413.36 "Heat Exchanger Humidifiers."
ss. Dehumidification units specified in Section 238416 "Mechanical Dehumidification Units."
tt. Switchboards specified in Section 262300 "Low-Voltage Switchgear."
uu. Motor-control centers specified in Section 262419 "Motor-Control Centers."
vv. Variable-frequency controllers specified in Section 262923 "Variable-Frequency Motor Controllers."
ww. Diesel emergency engine generators specified in Section 263213.13 "Diesel-Engine-Driven Generator Sets."
xx. Gaseous emergency engine generators specified in Section 263213.16 "Gas-Engine-Driven Generator Sets."
yy. Bi-fuel emergency engine generators specified in Section 263213.19 "Bi-Fuel-Engine-Driven Generator Sets."
zz. UPS specified in Section 263353 "Static Uninterruptible Power Supply."
aaa. Refrigerant monitoring.
bbb. CO/NO2 Gas Detection Systems.
ccc. High-Volume, Low-Speed Fans.

B. Communication Interface to Other Building Systems:

1. DDC system shall have a communication interface with systems having a communication interface.
2. Systems to Be Connected:

a. Elevators specified in Section 142100 "Electric Traction Elevators."
b. Elevators specified in Section 142113 "Electric Traction Freight Elevators."
c. Elevators specified in Section 142400 "Hydraulic Elevators."
d. Elevators specified in Section 142413 "Hydraulic Freight Elevators."
e. Escalators specified in Section 143100 "Escalators."
f. Automated water treatment systems specified in Section 232500 "HVAC Water Treatment."
g. Automated water treatment systems specified in Section 232516 "Water Treatment for Open-Loop Hydronic Systems."
h. Automated water treatment systems specified in Section 232519 "Water Treatment for Steam System Feedwater."
i. Power monitoring specified in Section 260913 "Electrical Power Monitoring and Control."
j. Lighting controls specified in Section 260926 "Lighting Control Panelboards."
k. Lighting controls specified in Section 260943.16 "Addressable-Luminaire Lighting Controls."
l. Lighting controls specified in Section 260943.23 "Relay-Based Lighting Controls."
m. Fire-alarm system specified in Section 284621.11 "Addressable Fire-Alarm Systems."
n. Fire-alarm system specified in Section 284621.13 "Conventional Fire-Alarm Systems."
o. Access controls specified in Section 281300 "Access Control System Software and Database Management."
p. Intrusion detection specified in Section 283100 "Intrusion Detection."

q. Perimeter security specified in Section 283121 "Area and Perimeter Intrusion Detection."

3.3 DDC SYSTEM INTERFACE WITH EXISTING SYSTEMS

A. Interface with Existing Systems:

1. DDC systems shall interface existing systems to achieve integration.
2. Monitoring and Control of DDC System by Existing Control System:

   a. DDC system performance requirements shall be satisfied when monitoring and controlling DDC system by existing control system.
   b. Operator of existing system shall be able to upload, download, monitor, trend, control and program every input and output point in DDC system from existing control system using existing control system software and operator workstations.
   c. Remote monitoring and control from existing control system shall not require operators of existing control system to learn new software.
   d. Interface of DDC system into existing control system shall be transparent to operators of existing control system and allow operators to program, monitor, and control DDC system from any operator workstation connected to existing control system.

3. Integration of Existing Control System into DDC System:

   a. Existing control system performance requirements shall be satisfied when monitoring and controlling existing control system through DDC system.
   b. Operator shall be able to upload, download, monitor, alarm, report, trend, control and program every input and output point in existing system from DDC system using operator workstations and software provided. The combined systems shall share one database.
   c. Interface of existing control system I/O points into DDC system shall be transparent to operators. All operational capabilities shall be identical regardless of whether I/O already exists or I/O is being installed.

B. Integration with Existing Enterprise System:

1. DDC system shall interface with an existing enterprise system to adhere to Owner standards already in-place and to achieve integration.

2. Engage Owner's control system integrator to provide the following services:

   a. Enterprise system expansion and development of graphics, logs, reports, trends and other operational capabilities of enterprise system for I/O being added to DDC control system for use by enterprise system operators.
   b. Limited assistance during commissioning to extent of DDC system integration with existing enterprise system.
   c. Prepare on-site demonstration mockup of integration of DDC system to be installed with existing system before installing DDC system.

3. Control System Integrator Contact Information:

   a. Company: <Insert name>.
   b. Company Street Address: <Insert address>.
   c. Company Contact: <Insert name>.

d. Phone Number: <Insert phone number>.
e. E-mail Address: <Insert e-mail address>.

4. Attend meetings with control system integrator to integrate DDC system.

3.4 CONTROL DEVICES FOR INSTALLATION BY INSTALLERS

A. Deliver selected control devices, specified in indicated HVAC instrumentation and control device Sections, to identified equipment and systems manufacturers for factory installation and to identified installers for field installation.

B. Deliver the following to duct fabricator and Installer for installation in ductwork. Include installation instructions to Installer and supervise installation for compliance with requirements.

1. DDC control dampers, which are specified in Section 230923.12 "Control Dampers."
2. Airflow sensors and switches, which are specified in Section 230923.14 "Flow Instruments."
3. Pressure sensors, which are specified in Section 230923.23 "Pressure Instruments."

C. Deliver the following to plumbing and HVAC piping installers for installation in piping. Include installation instructions to Installer and supervise installation for compliance with requirements.

1. DDC control valves, which are specified in Section 230923.11 "Control Valves."
2. Pipe-mounted flow meters, which are specified in Section 230923.14 "Flow Instruments."
3. Pipe-mounted sensors, switches, and transmitters. Flow meters are specified in Section 230923.14 "Flow Instruments."
4. Tank-mounted sensors, switches, and transmitters. Pressure sensors, switches, and transmitters are specified in Section 230923.23 "Pressure Instruments."
5. Liquid and steam temperature sensors, switches, and transmitters are specified in Section 230923.27 "Temperature Instruments."
6. Pipe- and tank-mounted thermowells. Liquid and steam thermowells are specified in Section 230923.27 "Temperature Instruments."

3.5 CONTROL DEVICES FOR EQUIPMENT MANUFACTURER FACTORY INSTALLATION

A. Deliver the following to air-handling unit manufacturer for factory installation. Include installation instructions to air-handling unit manufacturer and supervise installation for compliance with requirements.

1. Programmable application or application-specific controller.
2. Unit-mounted DDC control dampers and actuators, which are specified in Section 230923.12 "Control Dampers."
3. Unit-mounted airflow sensors, switches, and transmitters, which are specified in Section 230923.14 "Flow Instruments."
4. Unit-mounted gas sensors, and transmitters, which are specified in Section 230923.16 "Gas Instruments."
5. Unit-mounted leak-detection switches, which are specified in Section 230923.18 "Leak Detection Instruments."
6. Unit-mounted pressure sensors, switches, and transmitters, which are specified in Section 230923.23 "Pressure Instruments."
7. Unit-mounted speed sensors, switches, and transmitters, which are specified in Section 230923.24 "Speed Instruments."

8. Unit-mounted temperature sensors, switches, and transmitters. Air-temperature sensors, switches, and transmitters are specified in Section 230923.27 "Temperature Instruments."
9. Relays.

B. Deliver the following to terminal unit manufacturer for factory installation. Include installation instructions to terminal unit manufacturer.

1. Programmable application or application-specific controller.
2. Electric damper actuator. Damper actuators are specified in Section 230923.12 "Control Dampers."
3. Unit-mounted flow and pressure sensors, transmitters, and transducers. Flow sensors, transmitters, and transducers are specified in Section 230923.14 "Flow Instruments." Pressure sensors, switches, and transmitters are specified in Section 230923.23 "Pressure Instruments."
4. Unit-mounted temperature sensors. Air-temperature sensors, switches, and transmitters are specified in Section 230923.27 "Temperature Instruments."
5. Relays.

C. Deliver the following to fan-coil unit manufacturer for factory installation. Include installation instructions to fan-coil unit manufacturer.

1. Programmable application or application-specific controller.
2. Unit-mounted temperature sensors. Air-temperature sensors, switches, and transmitters are specified in Section 230923.27 "Temperature Instruments."
3. Flow and pressure switches. Air and liquid flow sensors, transmitters, and transducers are specified in Section 230923.14 "Flow Instruments." Pressure sensors, switches, and transmitters are specified in Section 230923.23 "Pressure Instruments."
4. Leak-detection switches, which are specified in Section 230923.18 "Leak Detection Instruments."
5. Relays.

3.6 GENERAL INSTALLATION REQUIREMENTS

A. Install products to satisfy more stringent of all requirements indicated.

B. Install products level, plumb, parallel, and perpendicular with building construction.

C. Support products, tubing, piping wiring and raceways. Brace products to prevent lateral movement and sway or a break in attachment.

D. If codes and referenced standards are more stringent than requirements indicated, comply with requirements in codes and referenced standards.

E. Fabricate openings and install sleeves in ceilings, floors, roof, and walls required by installation of products. Before proceeding with drilling, punching, and cutting, check for concealed work to avoid damage. Patch, flash, grout, seal, and refinish openings to match adjacent condition.

F. Firestop Penetrations Made in Fire-Rated Assemblies: Comply with requirements in Section 078413 "Penetration Firestopping."

G. Seal penetrations made in acoustically rated assemblies. Comply with requirements in Section 079200 "Joint Sealants."

H. Welding Requirements:

1. Restrict welding and burning to supports and bracing.
2. No equipment shall be cut or welded without approval. Welding or cutting will not be approved if there is risk of damage to adjacent Work.
3. Welding, where approved, shall be by inert-gas electric arc process and shall be performed by qualified welders according to applicable welding codes.
4. If requested on-site, show satisfactory evidence of welder certificates indicating ability to perform welding work intended.

I. Fastening Hardware:

1. Stillson wrenches, pliers, and other tools that damage surfaces of rods, nuts, and other parts are prohibited for work of assembling and tightening fasteners.
2. Tighten bolts and nuts firmly and uniformly. Do not overstress threads by excessive force or by oversized wrenches.
3. Lubricate threads of bolts, nuts and screws with graphite and oil before assembly.

J. If product locations are not indicated, install products in locations that are accessible and that will permit service and maintenance from floor, equipment platforms, or catwalks without removal of permanently installed furniture and equipment.

K. Corrosive Environments:

1. Avoid or limit use of materials in corrosive airstreams and environments, including, but not limited to, the following:

   a. Laboratory exhaust-air streams.
   b. Process exhaust-air streams.

2. When conduit is in contact with a corrosive airstream and environment, use Type 316 stainless steel conduit and fittings or conduit and fittings that are coated with a corrosive-resistant coating that is suitable for environment. Comply with requirements for installation of raceways and boxes specified in Section 260533 "Raceways and Boxes for Electrical Systems."
3. Where instruments are located in a corrosive airstream and are not corrosive resistant from manufacturer, field install products in NEMA 250, Type 4X enclosure constructed of Type 316L stainless steel.

3.7 WORKSTATION INSTALLATION

A. Desktop Workstations Installation:

1. Install workstation(s) at location(s) directed by Owner.
2. Install multiple-receptacle power strip with cord for use in connecting multiple workstation components to a single duplex electrical power receptacle.
3. Install software on workstation(s) and verify software functions properly.
4. Develop Project-specific graphics, trends, reports, logs and historical database.
5. Power each workstation through a dedicated UPS unit. Locate UPS adjacent to workstation.

B. Portable Workstations Installation:

1. Turn over portable workstations to Owner at Substantial Completion.
2. Install software on workstation(s) and verify software functions properly.

C. Color Graphics Application:

1. Use system schematics indicated as starting point to create graphics.
2. Develop Project-specific library of symbols for representing system equipment and products.
3. Incorporate digital images of Project-completed installation into graphics where beneficial to enhance effect.
4. Submit sketch of graphic layout with description of all text for each graphic for Owner's and Architect's review before creating graphic using graphics software.
5. Seek Owner input in graphics development once using graphics software.
6. Final editing shall be done on-site with Owner's review and feedback.
7. Refine graphics as necessary for Owner acceptance.
8. On receiving Owner acceptance, print a hard copy for inclusion in operation and maintenance manual. Prepare a scanned copy PDF file of each graphic and include with softcopy of DDC system operation and maintenance manual.

D. Wall-Mounted Portable Operator's Workstation Cabinet Installation:

1. Install wall-mounted portable operator's workstation cabinet(s) at following location(s) and at locations directed by Owner:

   a. Each mechanical room.
   b. Chiller room.
   c. Boiler room.

2. Connect each cabinet to 120-V, single-phase, 60Hz field power source, and install single gang electrical box with NEMA WD 6, Type 20R duplex receptacle and metal cover plate in cabinet. Comply with requirements in Section 262726 "Wiring Devices."
3. Connect each cabinet to Ethernet network and install an Ethernet network port for connection to portable operator workstation Ethernet cable. Comply with requirements in Section 271513 "Communications Copper Horizontal Cabling."

3.8 POT INSTALLATION

A. Install two portable operator terminal(s).

B. Turn over POTs to Owner at Substantial Completion.

C. Install software on each POT and verify that software functions properly.

3.9 SERVER INSTALLATION

A. Install server(s) at location(s) directed by Owner.

B. Install number of servers required to suit requirements indicated. Review Project requirements and indicate layout of proposed location in Shop Drawings.

C. Install software indicated on server(s) and verify that software functions properly.

D. Develop Project-specific graphics, trends, reports, logs, and historical database.

E. Power servers through dedicated UPS unit. Locate UPS adjacent to server.

3.10 PRINTER INSTALLATION

A. Provide the following printer(s) at location(s) directed by Owner:
   1. Color Inkjet: Quantity, one per desktop workstation.

B. Install printer software on workstations and verify that software functions properly.

3.11 GATEWAY INSTALLATION

A. Install gateways if required for DDC system communication interface requirements indicated.

B. Test gateway to verify that communication interface functions properly.

3.12 ROUTER INSTALLATION

A. Install routers if required for DDC system communication interface requirements indicated.

B. Test router to verify that communication interface functions properly.

3.13 CONTROLLER INSTALLATION

A. Install controllers in enclosures to comply with indicated requirements.

B. Connect controllers to field power supply and to UPS units where indicated.

C. Install controller with latest version of applicable software and configure to execute requirements indicated.

D. Test and adjust controllers to verify operation of connected I/O to achieve performance indicated requirements while executing sequences of operation.

E. Installation of Network Controllers:

   1. Quantity and location of network controllers shall be determined by DDC system manufacturer to satisfy requirements indicated.
   2. Install controllers in a protected location that is easily accessible by operators.
   3. Top of controller shall be within 72 inches of finished floor.

F. Installation of Programmable Application Controllers:

   1. Quantity and location of programmable application controllers shall be determined by DDC system manufacturer to satisfy requirements indicated.
   2. Install controllers in a protected location that is easily accessible by operators.
   3. Top of controller shall be within 72 inches of finished floor.

G. Application-Specific Controllers:

   1. Quantity and location of application-specific controllers shall be determined by DDC system manufacturer to satisfy requirements indicated.
   2. For controllers not mounted directly on equipment being controlled, install controllers in a protected location that is easily accessible by operators.

3.14 INSTALLATION OF WIRELESS ROUTERS FOR OPERATOR INTERFACE

A. Install wireless routers to achieve optimum performance and best possible coverage.

B. Mount wireless routers in a protected location that is within 60 inches of floor and easily accessible by operators.

C. Connect wireless routers to field power supply and to UPS units if network controllers are powered through UPS units.

D. Install wireless router with latest version of applicable software and configure wireless router with WPA2 security and password protection. Create access password with not less than 12 characters consisting of letters and numbers and at least one special character. Document password in operations and maintenance manuals for reference by operators.

E. Test and adjust wireless routers for proper operation with portable workstation and other wireless devices intended for use by operators.

3.15 ENCLOSURES INSTALLATION

A. Install the following items in enclosures, to comply with indicated requirements:

1. Gateways.
2. Routers.
3. Controllers.
4. Electrical power devices.
5. UPS units.
6. Relays.
7. Accessories.
8. Instruments.
9. Actuators

B. Attach wall-mounted enclosures to wall using the following types of steel struts:

1. For NEMA 250, Type 1 Enclosures: Use corrosion-resistant-coated steel strut and hardware.
2. For NEMA 250, Type 4, and Type 4X Enclosures and Enclosures Located Outdoors: Use stainless steel strut and hardware.
3. Install plastic caps on exposed cut edges of strut.

C. Align top or bottom of adjacent enclosures.

D. Install floor-mounted enclosures located in mechanical equipment rooms on concrete housekeeping pads. Attach enclosure legs using galvanized- or stainless steel anchors.

E. Install continuous and fully accessible wireways to connect conduit, wire, and cable to multiple adjacent enclosures. Wireway used for application shall have protection equal to NEMA 250 rating of connected enclosures.

3.16 ELECTRIC POWER CONNECTIONS

A. Connect electrical power to DDC system products requiring electrical power connections.

B. Design of electrical power to products not indicated with electric power is delegated to DDC system provider and installing trade. Work shall comply with NFPA 70 and other requirements indicated.

C. Comply with requirements in Section 262816 "Enclosed Switches and Circuit Breakers" for electrical power circuit breakers.

D. Comply with requirements in Section 260519 "Low-Voltage Electrical Power Conductors and Cables" for electrical power conductors and cables.

E. Comply with requirements in Section 260533 "Raceways and Boxes for Electrical Systems" for electrical power raceways and boxes.

3.17 IDENTIFICATION

A. Identify system components, wiring, cabling, and terminals. Comply with requirements in Section 260553 "Identification for Electrical Systems" for identification products and installation.

B. Install laminated acrylic or melamine plastic signs with unique identification on face for each of the following:

1. Operator workstation.
2. Server.
3. Printer.
4. Gateway.
5. Router.
6. Protocol analyzer.
7. DDC controller.
8. Enclosure.
9. Electrical power device.
10. UPS unit.
11. Accessory.

C. Install unique instrument identification on face of each instrument connected to a DDC controller.

D. Install unique identification on face of each control damper and valve actuator connected to a DDC controller.

E. Where product is installed above accessible tile ceiling, also install matching identification on face of ceiling grid located directly below.

F. Where product is installed above an inaccessible ceiling, also install identification on face of access door directly below.

G. Warning Labels and Signs:

1. Shall be permanently attached to equipment that can be automatically started by DDC control system.
2. Shall be located in highly visible location near power service entry points.

3.18 NETWORK INSTALLATION

A. Install optical fiber cable when connecting between the following network devices and when located in different buildings on campus:

1. Operator workstations.
2. Operator workstations and network controllers.
3. Network controllers.

B. Install balanced twisted pair or optical fiber cable when connecting between the following network devices:

1. Operator workstations.
2. Operator workstations and network controllers.
3. Network controllers.

C. Install balanced twisted pair or copper cable (as required by equipment) when connecting between the following:

1. Gateways.
2. Gateways and network controllers or programmable application controllers.
3. Routers.
4. Routers and network controllers or programmable application controllers.
5. Network controllers and programmable application controllers.
6. Programmable application controllers.
7. Programmable application controllers and application-specific controllers.
8. Application-specific controllers.

D. Install cable in continuous raceway.

1. Where indicated on Drawings, cable trays may be used for copper cable in lieu of conduit.

3.19 NETWORK NAMING AND NUMBERING

A. Coordinate with Owner and provide unique naming and addressing for networks and devices.

B. ASHRAE 135 Networks:

1. MAC Address:

a. Every network device shall have an assigned and documented MAC address unique to its network.
b. Ethernet Networks: Document MAC address assigned at its creation.
c. ARCNET or MS/TP networks: Assign from 00 to 64.

2. Network Numbering:

a. Assign unique numbers to each new network.
b. Provide ability for changing network number through device switches or operator interface.
c. DDC system, with all possible connected LANs, can contain up to 65,534 unique networks.

3. Device Object Identifier Property Number:

a. Assign unique device object identifier property numbers or device instances for each device network.
b. Provide for future modification of device instance number by device switches or operator interface.
c. LAN shall support up to 4,194,302 unique devices.

4. Device Object Name Property Text:

a. Device object name property field shall support 32 minimum printable characters.
b. Assign unique device "Object Name" property names with plain-English descriptive names for each device.

1) Example 1: Device object name for device controlling boiler plant at Building 1000 would be "HW System B1000."
2) Example 2: Device object name for a VAV terminal unit controller could be "VAV unit 102".

5. Object Name Property Text for Other Than Device Objects:

a. Object name property field shall support 32 minimum printable characters.
b. Assign object name properties with plain-English names descriptive of application.

1) Example 1: "Zone 1 Temperature."
2) Example 2 "Fan Start and Stop."

6. Object Identifier Property Number for Other Than Device Objects:

a. Assign object identifier property numbers according to Drawings or tables indicated.
b. If not indicated, object identifier property numbers may be assigned at Installer's discretion but must be approved by Owner in advance, be documented and be unique for like object types within device.

3.20 CONTROL WIRE, CABLE AND RACEWAYS INSTALLATION

A. Comply with NECA 1.

B. Wire and Cable Installation:

1. Comply with installation requirements in Section 260523 "Control-Voltage Electrical Power Cables."
2. Comply with installation requirements in Section 271313 "Communications Copper Backbone Cabling."
3. Comply with installation requirements in Section 271513 "Communications Copper Horizontal Cabling."
4. Install cables with protective sheathing that is waterproof and capable of withstanding continuous temperatures of 90 deg C with no measurable effect on physical and electrical properties of cable.

a. Provide shielding to prevent interference and distortion from adjacent cables and equipment.

5. Terminate wiring in a junction box.

a. Clamp cable over jacket in junction box.

b. Individual conductors in the stripped section of the cable shall be slack between the clamping point and terminal block.

6. Terminate field wiring and cable not directly connected to instruments and control devices having integral wiring terminals using terminal blocks.
7. Install signal transmission components according to IEEE C2, REA Form 511a, NFPA 70, and as indicated.
8. Use shielded cable to transmitters.
9. Use shielded cable to temperature sensors.
10. Perform continuity and meager testing on wire and cable after installation.

C. Conduit Installation:

1. Comply with Section 260533 "Raceways and Boxes for Electrical Systems" for control-voltage conductors.
2. Comply with Section 270528 "Pathways for Communications Systems" for balanced twisted pair cabling and optical fiber installation.

3.21 OPTICAL FIBER CABLE SYSTEM INSTALLATION

A. Comply with installation requirements in Section 271323 "Communications Optical Fiber Backbone Cabling."

B. Comply with installation requirements in Section 271523 "Communications Optical Fiber Horizontal Cabling."

3.22 FIELD QUALITY CONTROL

A. Testing Agency: Engage a qualified testing agency to perform tests and inspections.

B. Testing:

1. Perform preinstallation, in-progress, and final tests, supplemented by additional tests, as necessary.
2. Preinstallation Cable Verification: Verify integrity and serviceability for new cable lengths before installation. This assurance may be provided by using vendor verification documents, testing, or other methods. As a minimum, furnish evidence of verification for cable attenuation and bandwidth parameters.
3. In-Progress Testing: Perform standard tests for correct pair identification and termination during installation to ensure proper installation and cable placement. Perform tests in addition to those specified if there is any reason to question condition of material furnished and installed. Testing accomplished is to be documented by agency conducting tests. Submit test results for Project record.
4. Final Testing: Perform final test of installed system to demonstrate acceptability as installed. Testing shall be performed according to a test plan supplied by DDC system manufacturer. Defective Work or material shall be corrected and retested. As a minimum, final testing for cable system, including spare cable, shall verify conformance of attenuation, length, and bandwidth parameters with performance indicated.
5. Test Equipment: Use an optical fiber time domain reflectometer for testing of length and optical connectivity.
6. Test Results: Record test results and submit copy of test results for Project record.

3.23 DDC SYSTEM I/O CHECKOUT PROCEDURES

A. Check installed products before continuity tests, leak tests and calibration.

B. Check instruments for proper location and accessibility.

C. Check instruments for proper installation on direction of flow, elevation, orientation, insertion depth, or other applicable considerations that will impact performance.

D. Check instrument tubing for proper isolation, fittings, slope, dirt legs, drains, material and support.

E. For pneumatic products, verify that air supply for each product is properly installed.

F. Control Damper Checkout:

1. For pneumatic dampers, verify that pressure gauges are provided in each air line to damper actuator and positioner.
2. Verify that control dampers are installed correctly for flow direction.
3. Verify that proper blade alignment, either parallel or opposed, has been provided.
4. Verify that damper frame attachment is properly secured and sealed.
5. Verify that damper actuator and linkage attachment is secure.
6. Verify that actuator wiring is complete, enclosed and connected to correct power source.
7. Verify that damper blade travel is unobstructed.

G. Control Valve Checkout:

1. For pneumatic valves, verify that pressure gauges are provided in each air line to valve actuator and positioner.
2. Verify that control valves are installed correctly for flow direction.
3. Verify that valve body attachment is properly secured and sealed.
4. Verify that valve actuator and linkage attachment is secure.
5. Verify that actuator wiring is complete, enclosed and connected to correct power source.
6. Verify that valve ball, disc or plug travel is unobstructed.
7. After piping systems have been tested and put into service, but before insulating and balancing, inspect each valve for leaks. Adjust or replace packing to stop leaks. Replace the valve if leaks persist.

H. Instrument Checkout:

1. Verify that instrument is correctly installed for location, orientation, direction and operating clearances.
2. Verify that attachment is properly secured and sealed.
3. Verify that conduit connections are properly secured and sealed.
4. Verify that wiring is properly labeled with unique identification, correct type and size and is securely attached to proper terminals.
5. Inspect instrument tag against approved submittal.
6. For instruments with tubing connections, verify that tubing attachment is secure and isolation valves have been provided.
7. For flow instruments, verify that recommended upstream and downstream distances have been maintained.
8. For temperature instruments:

    a. Verify sensing element type and proper material.
    b. Verify length and insertion.

3.24 DDC SYSTEM I/O ADJUSTMENT, CALIBRATION AND TESTING:

A. Calibrate each instrument installed that is not factory calibrated and provided with calibration documentation.

B. Provide a written description of proposed field procedures and equipment for calibrating each type of instrument. Submit procedures before calibration and adjustment.

C. For each analog instrument, make a three-point test of calibration for both linearity and accuracy.

D. Equipment and procedures used for calibration shall comply with instrument manufacturer's written instructions.

E. Provide diagnostic and test equipment for calibration and adjustment.

F. Field instruments and equipment used to test and calibrate installed instruments shall have accuracy at least twice the instrument accuracy being calibrated. An installed instrument with an accuracy of 1 percent shall be checked by an instrument with an accuracy of 0.5 percent.

G. Calibrate each instrument according to instrument instruction manual supplied by manufacturer.

H. If after calibration indicated performance cannot be achieved, replace out-of-tolerance instruments.

I. Comply with field testing requirements and procedures indicated by ASHRAE's Guideline 11, "Field Testing of HVAC Control Components," in the absence of specific requirements, and to supplement requirements indicated.

J. Analog Signals:

1. Check analog voltage signals using a precision voltage meter at zero, 50, and 100 percent.
2. Check analog current signals using a precision current meter at zero, 50, and 100 percent.
3. Check resistance signals for temperature sensors at zero, 50, and 100 percent of operating span using a precision-resistant source.

K. Digital Signals:

1. Check digital signals using a jumper wire.
2. Check digital signals using an ohmmeter to test for contact making or breaking.

L. Control Dampers:

1. Stroke and adjust control dampers following manufacturer's recommended procedure, from 100 percent open to 100 percent closed and back to 100 percent open.
2. Stroke control dampers with pilot positioners. Adjust damper and positioner following manufacturer's recommended procedure, so damper is 100 percent closed, 50 percent closed and 100 percent open at proper air pressure.
3. Check and document open and close cycle times for applications with a cycle time less than 30 seconds.
4. For control dampers equipped with positive position indication, check feedback signal at multiple positions to confirm proper position indication.

M. Control Valves:

1. Stroke and adjust control valves following manufacturer's recommended procedure, from 100 percent open to 100 percent closed and back to 100 percent open.
2. Stroke control valves with pilot positioners. Adjust valve and positioner following manufacturer's recommended procedure, so valve is 100 percent closed, 50 percent closed and 100 percent open at proper air pressures.
3. Check and document open and close cycle times for applications with a cycle time less than 30 seconds.
4. For control valves equipped with positive position indication, check feedback signal at multiple positions to confirm proper position indication.

N. Meters: Check sensors at zero, 50, and 100 percent of Project design values.

O. Sensors: Check sensors at zero, 50, and 100 percent of Project design values.

P. Switches: Calibrate switches to make or break contact at set points indicated.

Q. Transmitters:

1. Check and calibrate transmitters at zero, 50, and 100 percent of Project design values.
2. Calibrate resistance temperature transmitters at zero, 50, and 100 percent of span using a precision-resistant source.

3.25 DDC SYSTEM CONTROLLER CHECKOUT

A. Verify power supply.

1. Verify voltage, phase and hertz.
2. Verify that protection from power surges is installed and functioning.
3. Verify that ground fault protection is installed.
4. If applicable, verify if connected to UPS unit.
5. If applicable, verify if connected to a backup power source.
6. If applicable, verify that power conditioning units, transient voltage suppression and high-frequency noise filter units are installed.

B. Verify that wire and cabling is properly secured to terminals and labeled with unique identification.

C. Verify that spare I/O capacity is provided.

3.26 DDC CONTROLLER I/O CONTROL LOOP TESTS

A. Testing:

1. Test every I/O point connected to DDC controller to verify that safety and operating control set points are as indicated and as required to operate controlled system safely and at optimum performance.
2. Test every I/O point throughout its full operating range.
3. Test every control loop to verify operation is stable and accurate.
4. Adjust control loop proportional, integral and derivative settings to achieve optimum performance while complying with performance requirements indicated. Document testing of each control loop's precision and stability via trend logs.
5. Test and adjust every control loop for proper operation according to sequence of operation.
6. Test software and hardware interlocks for proper operation. Correct deficiencies.
7. Operate each analog point at the following:

a. Upper quarter of range.
b. Lower quarter of range.
c. At midpoint of range.

8. Exercise each binary point.
9. For every I/O point in DDC system, read and record each value at operator workstation, at DDC controller and at field instrument simultaneously. Value displayed at operator workstation, at DDC controller and at field instrument shall match.
10. Prepare and submit a report documenting results for each I/O point in DDC system and include in each I/O point a description of corrective measures and adjustments made to achieve desire results.

3.27 DDC SYSTEM VALIDATION TESTS

A. Perform validation tests before requesting final review of system. Before beginning testing, first submit Pretest Checklist and Test Plan.

B. After approval of Test Plan, execute all tests and procedures indicated in plan.

C. After testing is complete, submit completed test checklist.

D. Pretest Checklist: Submit the following list with items checked off once verified:

1. Detailed explanation for any items that are not completed or verified.
2. Required mechanical installation work is successfully completed and HVAC equipment is working correctly.
3. HVAC equipment motors operate below full-load amperage ratings.
4. Required DDC system components, wiring, and accessories are installed.
5. Installed DDC system architecture matches approved Drawings.
6. Control electric power circuits operate at proper voltage and are free from faults.
7. Required surge protection is installed.
8. DDC system network communications function properly, including uploading and downloading programming changes.
9. Using BACnet protocol analyzer, verify that communications are error free.
10. Each controller's programming is backed up.
11. Equipment, products, tubing, wiring cable, and conduits are properly labeled.
12. All I/O points are programmed into controllers.
13. Testing, adjusting, and balancing work affecting controls is complete.
14. Dampers and actuators zero and span adjustments are set properly.
15. Each control damper and actuator goes to failed position on loss of power.
16. Valves and actuators zero and span adjustments are set properly.
17. Each control valve and actuator goes to failed position on loss of power.
18. Meter, sensor and transmitter readings are accurate and calibrated.
19. Control loops are tuned for smooth and stable operation.
20. View trend data where applicable.
21. Each controller works properly in standalone mode.
22. Safety controls and devices function properly.
23. Interfaces with fire-alarm system function properly.
24. Electrical interlocks function properly.
25. Operator workstations and other interfaces are delivered, all system and database software is installed, and graphic are created.
26. Record Drawings are completed.

E. Test Plan:

1. Prepare and submit a validation test plan including test procedures for performance validation tests.
2. Test plan shall address all specified functions of DDC system and sequences of operation.
3. Explain detailed actions and expected results to demonstrate compliance with requirements indicated.
4. Explain method for simulating necessary conditions of operation used to demonstrate performance.
5. Include a test checklist to be used to check and initial that each test has been successfully completed.
6. Submit test plan documentation 20 business days before start of tests.

F. Validation Test:

1. Verify operating performance of each I/O point in DDC system.

    a. Verify analog I/O points at operating value.
    b. Make adjustments to out-of-tolerance I/O points.

        1) Identify I/O points for future reference.
        2) Simulate abnormal conditions to demonstrate proper function of safety devices.
        3) Replace instruments and controllers that cannot maintain performance indicated after adjustments.

2. Simulate conditions to demonstrate proper sequence of control.
3. Readjust settings to design values and observe ability of DDC system to establish desired conditions.
4. After 24 Hours following Initial Validation Test:

    a. Re-check I/O points that required corrections during initial test.
    b. Identify I/O points that still require additional correction and make corrections necessary to achieve desired results.

5. After 24 Hours of Second Validation Test:

    a. Re-check I/O points that required corrections during second test.
    b. Continue validation testing until I/O point is normal on two consecutive tests.

6. Completely check out, calibrate, and test all connected hardware and software to ensure that DDC system performs according to requirements indicated.
7. After validation testing is complete, prepare and submit a report indicating all I/O points that required correction and how many validation re-tests it took to pass. Identify adjustments made for each test and indicate instruments that were replaced.

G. DDC System Response Time Test:

1. Simulate HLC.

    a. Heavy load shall be an occurrence of 50 percent of total connected binary COV, one-half of which represent an "alarm" condition, and 50 percent of total connected analog COV, one-half of which represent an "alarm" condition, that are initiated simultaneously on a one-time basis.

2. Initiate 10 successive occurrences of HLC and measure response time to typical alarms and status changes.

3. Measure with a timer having at least 0.1-second resolution and 0.01 percent accuracy.
4. Purpose of test is to demonstrate DDC system, as follows:

    a. Reaction to COV and alarm conditions during HLC.
    b. Ability to update DDC system database during HLC.

5. Passing test is contingent on the following:

    a. Alarm reporting at printer beginning no more than two seconds after the initiation (time zero) of HLC.
    b. All alarms, both binary and analog, are reported and printed; none are lost.
    c. Compliance with response times specified.

6. Prepare and submit a report documenting HLC tested and results of test including time stamp and print out of all alarms.

H. DDC System Network Bandwidth Test:

1. Test network bandwidth usage on all DDC system networks to demonstrate bandwidth usage under DDC system normal operating conditions and under simulated HLC.
2. To pass, none of DDC system networks shall use more than 70 percent of available bandwidth under normal and HLC operation.

3.28 DDC SYSTEM WIRELESS NETWORK VERIFICATION

A. DDC system Installer shall design wireless DDC system networks to comply with performance requirements indicated.

B. Installer shall verify wireless network performance through field testing and shall document results in a field test report.

C. Testing and verification of all wireless devices shall include, but not be limited to, the following:

1. Speed.
2. Online status.
3. Signal strength.

3.29 FINAL REVIEW

A. Submit written request to Construction Manager when DDC system is ready for final review. Written request shall state the following:

1. DDC system has been thoroughly inspected for compliance with contract documents and found to be in full compliance.
2. DDC system has been calibrated, adjusted and tested and found to comply with requirements of operational stability, accuracy, speed and other performance requirements indicated.
3. DDC system monitoring and control of HVAC systems results in operation according to sequences of operation indicated.
4. DDC system is complete and ready for final review.

B. Review by Construction Manager shall be made after receipt of written request. A field report shall be issued to document observations and deficiencies.

C. Take prompt action to remedy deficiencies indicated in field report and submit a second written request when all deficiencies have been corrected. Repeat process until no deficiencies are reported.

D. Should more than two reviews be required, DDC system manufacturer and Installer shall compensate entity performing review for total costs, labor and expenses, associated with third and subsequent reviews. Estimated cost of each review shall be submitted and approved by DDC system manufacturer and Installer before making the review.

E. Prepare and submit closeout submittals when no deficiencies are reported.

F. A part of DDC system final review shall include a demonstration to parties participating in final review.

1. Provide staff familiar with DDC system installed to demonstrate operation of DDC system during final review.
2. Provide testing equipment to demonstrate accuracy and other performance requirements of DDC system that is requested by reviewers during final review.
3. Demonstration shall include, but not be limited to, the following:

a. Accuracy and calibration of 10 I/O points randomly selected by reviewers. If review finds that some I/O points are not properly calibrated and not satisfying performance requirements indicated, additional I/O points may be selected by reviewers until total I/O points being reviewed that satisfy requirements equals quantity indicated.
b. HVAC equipment and system hardwired and software safeties and life-safety functions are operating according to sequence of operation. Up to 10 I/O points shall be randomly selected by reviewers. Additional I/O points may be selected by reviewers to discover problems with operation.
c. Correct sequence of operation after electrical power interruption and resumption after electrical power is restored for randomly selected HVAC systems.
d. Operation of randomly selected dampers and valves in normal-on, normal-off and failed positions.
e. Reporting of alarm conditions for randomly selected alarms, including different classes of alarms, to ensure that alarms are properly received by operators and operator workstations.
f. Trends, summaries, logs and reports set-up for Project.
g. For up to three HVAC systems randomly selected by reviewers, use graph trends to show that sequence of operation is executed in correct manner and that HVAC systems operate properly through complete sequence of operation including different modes of operations indicated. Show that control loops are stable and operating at set points and respond to changes in set point of 20 percent or more.
h. Software's ability to communicate with controllers, operator workstations, uploading and downloading of control programs.
i. Software's ability to edit control programs off-line.
j. Data entry to show Project-specific customizing capability including parameter changes.
k. Step through penetration tree, display all graphics, demonstrate dynamic update, and direct access to graphics.
l. Execution of digital and analog commands in graphic mode.
m. Spreadsheet and curve plot software and its integration with database.
n. Online user guide and help functions.
o. Multitasking by showing different operations occurring simultaneously on four quadrants of split screen.
p. System speed of response compared to requirements indicated.
q. For Each Network and Programmable Application Controller:

1) Memory: Programmed data, parameters, trend and alarm history collected during normal operation is not lost during power failure.
2) Operator Interface: Ability to connect directly to each type of digital controller with a portable workstation and mobile device. Show that maintenance personnel interface tools perform as indicated in manufacturer's technical literature.
3) Standalone Ability: Demonstrate that controllers provide stable and reliable standalone operation using default values or other method for values normally read over network.
4) Electric Power: Ability to disconnect any controller safely from its power source.
5) Wiring Labels: Match control drawings.
6) Network Communication: Ability to locate a controller's location on network and communication architecture matches Shop Drawings.
7) Nameplates and Tags: Accurate and permanently attached to control panel doors, instrument, actuators, and devices.

r. For Each Operator Workstation:

1) I/O points lists agree with naming conventions.
2) Graphics are complete.
3) UPS unit, if applicable, operates.

s. Communications and Interoperability: Demonstrate proper interoperability of data sharing, alarm and event management, trending, scheduling, and device and network management. Use ASHRAE 135 protocol analyzer to help identify devices, view network traffic, and verify interoperability. Requirements must be met even if only one manufacturer's equipment is installed.

1) Data Presentation: On each operator workstation, demonstrate graphic display capabilities.
2) Reading of Any Property: Demonstrate ability to read and display any used readable object property of any device on network.
3) Set Point and Parameter Modifications: Show ability to modify set points and tuning parameters indicated. Modifications are made with messages and write services initiated by an operator using workstation graphics, or by completing a field in a menu with instructional text.
4) Peer-to-Peer Data Exchange: Network devices are installed and configured to perform without need for operator intervention to implement Project sequence of operation and to share global data.
5) Alarm and Event Management: Alarms and events are installed and prioritized according to Owner. Demonstrate that time delays and other logic are set up to avoid nuisance tripping. Show that operators with sufficient privileges are permitted.
6) Schedule Lists: Schedules are configured for start and stop, mode change, occupant overrides, and night setback as defined in sequence of operations.
7) Schedule Display and Modification: Ability to display any schedule with start and stop times for calendar year. Show that all calendar entries and schedules are modifiable from any connected operator workstation by an operator with sufficient privilege.
8) Archival Storage of Data: Data archiving is handled by operator workstation and server and local trend archiving and display is accomplished.
9) Modification of Trend Log Object Parameters: Operator with sufficient privilege can change logged data points, sampling rate, and trend duration.
10) Device and Network Management:

a) Display of network device status.
b) Display of BACnet Object Information.
c) Silencing devices transmitting erroneous data.
d) Time synchronization.
e) Remote device re-initialization.
f) Backup and restore network device programming and master database(s).
g) Configuration management of routers.

3.30 EXTENDED OPERATION TEST

A. Extended operation test is intended to simulate normal operation of DDC system by Owner.

B. Operate DDC system for an operating period of 14 consecutive calendar days following Substantial Completion. Coordinate exact start date of testing with Owner.

C. Provide an operator familiar with DDC system installed to man an operator workstation while on-site during eight hours of each normal business day occurring during operating period.

D. During operating period, DDC system shall demonstrate correct operation and accuracy of monitored and controlled points as well as operation capabilities of sequences, logs, trends, reports, specialized control algorithms, diagnostics, and other software indicated.

1. Correct defects of hardware and software when it occurs.

E. Definition of Failures and Downtime during Operating Period:

1. Failed I/O point constituting downtime is an I/O point failing to perform its intended function consistently and a point physically failed due to hardware and software.
2. Downtime is when any I/O point in DDC system is unable to fulfill its' required function.
3. Downtime shall be calculated as elapsed time between a detected point failure as confirmed by an operator and time point is restored to service.
4. Maximum time interval allowed between DDC system detection of failure occurrence and operator confirmation shall be 0.5 hours.
5. Downtime shall be logged in hours to nearest 0.1 hour.
6. Power outages shall not count as downtime, but shall suspend test hours unless systems are provided with UPS and served through a backup power source.
7. Hardware or software failures caused by power outages shall count as downtime.

F. During operating period, log downtime and operational problems are encountered.

1. Identify source of problem.
2. Provide written description of corrective action taken.
3. Record duration of downtime.
4. Maintain log showing the following:

a. Time of occurrence.
b. Description of each occurrence and pertinent written comments for reviewer to understand scope and extent of occurrence.
c. Downtime for each failed I/O point.
d. Running total of downtime and total time of I/O point after each problem has been restored.

5. Log shall be available to Owner for review at any time.

G. For DDC system to pass extended operation test, total downtime shall not exceed 2 percent of total point-hours during operating period.

1. Failure to comply with minimum requirements of passing at end of operating period indicated shall require that operating period be extended one consecutive day at a time until DDC system passes requirement.

H. Evaluation of DDC system passing test shall be based on the following calculation:

1. Downtime shall be counted on a point-hour basis where total number of DDC system point-hours is equal to total number of I/O points in DDC system multiplied by total number of hours during operating period.
2. One point-hour of downtime is one I/O point down for one hour. Three points down for five hours is a total of 15 point-hours of downtime. Four points down for one-half hour is 2 point-hours of downtime.
3. Example Calculation: Maximum allowable downtime for 30-day test when DDC system has 1000 total I/O points (combined analog and binary) and has passing score of 1 percent downtime is computed by 30 days x 24 h/day x 1000 points x 1 percent equals 7200 point-hours of maximum allowable downtime.

I. Prepare test and inspection reports.

3.31 ADJUSTING

A. Occupancy Adjustments: When requested within 12 months from date of Substantial Completion, provide on-site assistance in adjusting system to suit actual occupied conditions. Provide up to two visits to Project during other-than-normal occupancy hours for this purpose.

3.32 MAINTENANCE SERVICE

A. Maintenance Service: Beginning at Substantial Completion, maintenance service shall include three months' full maintenance by DDC system manufacturer's authorized service representative. Include quarterly preventive maintenance, repair or replacement of worn or defective components, cleaning, calibration and adjusting as required for proper operation. Parts and supplies shall be manufacturer's authorized replacement parts and supplies.

3.33 SOFTWARE SERVICE AGREEMENT

A. Technical Support: Beginning at Substantial Completion, service agreement shall include software support for one year(s).

B. Upgrade Service: At Substantial Completion, update software to latest version. Install and program software upgrades that become available within one year(s) from date of Substantial Completion. Upgrading software shall include operating system and new or revised licenses for using software.

1. Upgrade Notice: At least 30 days to allow Owner to schedule and access system and to upgrade computer equipment if necessary.

3.34 DEMONSTRATION

A. Engage a factory-authorized service representative with complete knowledge of Project-specific system installed to train Owner's maintenance personnel to adjust, operate, and maintain DDC system.

B. Extent of Training:

1. Base extent of training on scope and complexity of DDC system indicated and training requirements indicated. Provide extent of training required to satisfy requirements indicated even if more than minimum training requirements are indicated.
2. Inform Owner of anticipated training requirements if more than minimum training requirements are indicated.
3. Minimum Training Requirements:

    a. Provide not less than 10 days of training total.
    b. Stagger training over multiple training classes to accommodate Owner's requirements. All training shall occur before end of warranty period.
    c. Total days of training shall be broken into not more than four separate training classes.
    d. Each training class shall be not less than two consecutive day(s).

C. Training Schedule:

1. Schedule training with Owner 20 business days before expected Substantial Completion.
2. Schedule training to provide Owner with at least 20 business days of notice in advance of training.
3. Training shall occur within normal business hours at a mutually agreed on time. Unless otherwise agreed to, training shall occur Monday through Friday, except on U.S. Federal holidays, with two morning sessions and two afternoon sessions. Each morning session and afternoon session shall be split in half with 15-minute break between sessions. Morning and afternoon sessions shall be separated by 60-minute lunch period. Training, including breaks and excluding lunch period, shall not exceed eight hours per day.
4. Provide staggered training schedule as requested by Owner.

D. Training Attendee List and Sign-in Sheet:

1. Request from Owner in advance of training a proposed attendee list with name, phone number and e-mail address.
2. Provide a preprinted sign-in sheet for each training session with proposed attendees listed and no fewer than six blank spaces to add additional attendees.
3. Preprinted sign-in sheet shall include training session number, date and time, instructor name, phone number and e-mail address, and brief description of content to be covered during session. List attendees with columns for name, phone number, e-mail address and a column for attendee signature or initials.
4. Circulate sign-in sheet at beginning of each session and solicit attendees to sign or initial in applicable location.
5. At end of each training day, send Owner an e-mail with an attachment of scanned copy (PDF) of circulated sign-in sheet for each session.

E. Training Attendee Headcount:

1. Plan in advance of training for five attendees.
2. Make allowance for Owner to add up to two attendee(s) at time of training.

3. Headcount may vary depending on training content covered in session. Attendee access may be restricted to some training content for purposes of maintaining system security.

F. Training Attendee Prior Knowledge: For guidance in planning required training and instruction, assume attendees have the following:

1. Basic user knowledge of computers and office applications.
2. Basic knowledge of HVAC systems.
3. Basic knowledge of DDC systems.
4. Basic knowledge of DDC system and products installed.

G. Attendee Training Manuals:

1. Provide each attendee with a color hard copy of all training materials and visual presentations.
2. Hard-copy materials shall be organized in a three-ring binder with table of contents and individual divider tabs marked for each logical grouping of subject matter. Organize material to provide space for attendees to take handwritten notes within training manuals.
3. In addition to hard-copy materials included in training manual, provide each binder with a sleeve or pocket that includes a DVD or flash drive with PDF copy of all hard-copy materials.

H. Instructor Requirements:

1. One or multiple qualified instructors, as required, to provide training.
2. Instructors shall have not less than five years of providing instructional training on not less than five past projects with similar DDC system scope and complexity to DDC system installed.

I. Organization of Training Sessions:

1. Organize training sessions into logical groupings of technical content and to reflect different levels of operators having access to system. Plan training sessions to accommodate the following three levels of operators:

   a. Daily operators.
   b. Advanced operators.
   c. System managers and administrators.

2. Plan and organize training sessions to group training content to protect DDC system security. Some attendees may be restricted to some training sessions that cover restricted content for purposes of maintaining DDC system security.

J. Training Outline:

1. Submit training outline for Owner review at least 20 business day before scheduling training.
2. Outline shall include a detailed agenda for each training day that is broken down into each of four training sessions that day, training objectives for each training session and synopses for each lesson planned.

K. On-Site Training:

1. Owner will provide conditioned classroom or workspace with ample desks or tables, chairs, power and data connectivity for instructor and each attendee.

2. Instructor shall provide training materials, projector and other audiovisual equipment used in training.
3. Provide as much of training located on-site as deemed feasible and practical by Owner.
4. On-site training shall include regular walk-through tours, as required, to observe each unique product type installed with hands-on review of operation, calibration and service requirements.
5. Operator workstation provided with DDC system shall be used in training. If operator workstation is not indicated, provide a temporary workstation to convey training content.

L. Off-Site Training:

1. Provide conditioned training rooms and workspace with ample tables desks or tables, chairs, power and data connectivity for each attendee.
2. Provide capability to remotely access to Project DDC system for use in training.
3. Provide a workstation for use by each attendee.

M. Training Content for Daily Operators:

1. Basic operation of system.
2. Understanding DDC system architecture and configuration.
3. Understanding each unique product type installed including performance and service requirements for each.
4. Understanding operation of each system and equipment controlled by DDC system including sequences of operation, each unique control algorithm and each unique optimization routine.
5. Operating operator workstations, printers and other peripherals.
6. Logging on and off system.
7. Accessing graphics, reports and alarms.
8. Adjusting and changing set points and time schedules.
9. Recognizing DDC system malfunctions.
10. Understanding content of operation and maintenance manuals including control drawings.
11. Understanding physical location and placement of DDC controllers and I/O hardware.
12. Accessing data from DDC controllers.
13. Operating portable operator workstations.
14. Review of DDC testing results to establish basic understanding of DDC system operating performance and HVAC system limitations as of Substantial Completion.
15. Running each specified report and log.
16. Displaying and demonstrating each data entry to show Project-specific customizing capability. Demonstrating parameter changes.
17. Stepping through graphics penetration tree, displaying all graphics, demonstrating dynamic updating, and direct access to graphics.
18. Executing digital and analog commands in graphic mode.
19. Demonstrating control loop precision and stability via trend logs of I/O for not less than 10 percent of I/O installed.
20. Demonstrating DDC system performance through trend logs and command tracing.
21. Demonstrating scan, update, and alarm responsiveness.
22. Demonstrating spreadsheet and curve plot software, and its integration with database.
23. Demonstrating on-line user guide and help function and mail facility.
24. Demonstrating multitasking by showing dynamic curve plot, and graphic construction operating simultaneously via split screen.
25. Demonstrating the following for HVAC systems and equipment controlled by DDC system:

    a. Operation of HVAC equipment in normal-off, -on and failed conditions while observing individual equipment, dampers, and valves for correct position under each condition.

b. For HVAC equipment with factory-installed software, show that integration into DDC system is able to communicate with DDC controllers or gateways, as applicable.
c. Using graphed trends, show that sequence of operation is executed in correct manner, and HVAC systems operate properly through complete sequence of operation including seasonal change, occupied and unoccupied modes, warm-up and cool-down cycles and other modes of operation indicated.
d. Hardware interlocks and safeties function properly and DDC system performs correct sequence of operation after electrical power interruption and resumption after power is restored.
e. Reporting of alarm conditions for each alarm, and confirm that alarms are received at assigned locations, including operator workstations.
f. Each control loop responds to set point adjustment and stabilizes within time period indicated.
g. Sharing of previously graphed trends of all control loops to demonstrate that each control loop is stable and set points are being maintained.

N. Training Content for Advanced Operators:

1. Making and changing workstation graphics.
2. Creating, deleting, and modifying alarms including annunciation and routing.
3. Creating, deleting, and modifying point trend logs including graphing and printing on an ad-hoc basis and operator-defined time intervals.
4. Creating, deleting, and modifying reports.
5. Creating, deleting, and modifying points.
6. Creating, deleting, and modifying programming including ability to edit control programs off-line.
7. Creating, deleting, and modifying system graphics and other types of displays.
8. Adding DDC controllers and other network communication devices such as gateways and routers.
9. Adding operator workstations.
10. Performing DDC system checkout and diagnostic procedures.
11. Performing DDC controller's operation and maintenance procedures.
12. Performing operator workstation operation and maintenance procedures.
13. Configuring DDC system hardware including controllers, workstations, communication devices and I/O points.
14. Maintaining, calibrating, troubleshooting, diagnosing, and repairing hardware.
15. Adjusting, calibrating, and replacing DDC system components.

O. Training Content for System Managers and Administrators:

1. DDC system software maintenance and backups.
2. Uploading, downloading and off-line archiving of all DDC system software and databases.
3. Interface with Project-specific, third-party operator software.
4. Understanding password and security procedures.
5. Adding new operators and making modifications to existing operators.
6. Operator password assignments and modification.
7. Operator authority assignment and modification.
8. Workstation data segregation and modification.

P. Video of Training Sessions:

1. Provide a digital video and audio recording of each training session. Create a separate recording file for each session.
2. Stamp each recording file with training session number, session name and date.
3. Provide Owner with two copies of digital files on DVDs or flash drives for later reference and for use in future training.

4. Owner retains right to make additional copies for intended training purposes without having to pay royalties.

END OF SECTION 23 09 23

SECTION 23 23 00 - REFRIGERANT PIPING

PART 1 - GENERAL

1.1 RELATED DOCUMENTS

A. Drawings and general provisions of the Contract, including General and Supplementary Conditions and Division 01 Specification Sections, apply to this Section.

1.2 SUMMARY

A. Section Includes:

1. Copper tube and fittings.
2. Steel pipe and fittings.
3. Valves and specialties.
4. Refrigerants.

1.3 ACTION SUBMITTALS

A. Product Data: For each type of valve, refrigerant piping, and piping specialty.

1. Include pressure drop, based on manufacturer's test data, for the following:

a. Thermostatic expansion valves.
b. Solenoid valves.
c. Hot-gas bypass valves.
d. Filter dryers.
e. Strainers.
f. Pressure-regulating valves.

B. Sustainable Design Submittals:

1. Product Data: For refrigerants, indicating compliance with refrigerant management practices.

C. Shop Drawings:

1. Show layout of refrigerant piping and specialties, including pipe, tube, and fitting sizes; flow capacities; valve arrangements and locations; slopes of horizontal runs; oil traps; double risers; wall and floor penetrations; and equipment connection details.
2. Show piping size and piping layout, including oil traps, double risers, specialties, and pipe and tube sizes to accommodate, as a minimum, equipment provided, elevation difference between compressor and evaporator, and length of piping to ensure proper operation and compliance with warranties of connected equipment.
3. Show interface and spatial relationships between piping and equipment.
4. Shop Drawing Scale: 1/4 inch equals 1 foot.

1.4 INFORMATIONAL SUBMITTALS

A. Welding certificates.

B. Field quality-control reports.

1.5 CLOSEOUT SUBMITTALS

A. Operation and Maintenance Data: For refrigerant valves and piping specialties to include in maintenance manuals.

1.6 QUALITY ASSURANCE

A. Welding Qualifications: Qualify procedures and personnel according to 2010 ASME Boiler and Pressure Vessel Code: Section IX, "Welding and Brazing Qualifications."

B. Comply with ASHRAE 15, "Safety Code for Refrigeration Systems."

C. Comply with ASME B31.5, "Refrigeration Piping and Heat Transfer Components."

1.7 PRODUCT STORAGE AND HANDLING

A. Store piping with end caps in place to ensure that piping interior and exterior are clean when installed.

PART 2 - PRODUCTS

2.1 PERFORMANCE REQUIREMENTS

A. Line Test Pressure for Refrigerant R-134a:

1. Suction Lines for Air-Conditioning Applications: 115 psig.
2. Suction Lines for Heat-Pump Applications: 225 psig.
3. Hot-Gas and Liquid Lines: 225 psig.

B. Line Test Pressure for Refrigerant R-407C:

1. Suction Lines for Air-Conditioning Applications: 230 psig.
2. Suction Lines for Heat-Pump Applications: 380 psig.
3. Hot-Gas and Liquid Lines: 380 psig.

C. Line Test Pressure for Refrigerant R-410A:

1. Suction Lines for Air-Conditioning Applications: 300 psig.
2. Suction Lines for Heat-Pump Applications: 535 psig.
3. Hot-Gas and Liquid Lines: 535 psig.

2.2 COPPER TUBE AND FITTINGS

A. Copper Tube: ASTM B 280, Type ACR.

B. Wrought-Copper Fittings, Solder-Joint: ASME B16.22.

C. Wrought-Copper Fittings, Brazed-Joint: ASME B16.50.

D. Wrought-Copper Unions: ASME B16.22.

E. Solder Filler Metals: ASTM B 32. Use 95-5 tin antimony or alloy HB solder to join copper socket fittings on copper pipe.

F. Brazing Filler Metals: AWS A5.8/A5.8M.

G. Flexible Connectors:

1. Body: Tin-bronze bellows with woven, flexible, tinned-bronze-wire-reinforced protective jacket.
2. End Connections: Socket ends.
3. Offset Performance: Capable of minimum 3/4-inch misalignment in minimum 7-inch-long assembly.
4. Working Pressure Rating: Factory test at minimum 500 psig.
5. Maximum Operating Temperature: 250 deg F.

H. Copper-Tube, Pressure-Seal-Joint Fittings for Refrigerant Piping:

1. Manufacturers: Subject to compliance with requirements, provide products by one of the following:

   a. Conex Banninger - USA.
   b. Parker Hannifin, Sporlan Division.
   c. RLS LLC.

2. Standard: UL 207; certified by UL for field installation. Certification as a UL-recognized component alone is unacceptable.
3. Housing: Copper.
4. O-Rings: HNBR or compatible with specific refrigerant.
5. Tools: Manufacturer's approved special tools.
6. Maximum Allowable Working Pressure: In accordance with UL 207: 700 psig
7. Minimum Allowable Burst Pressure: In accordance with UL 207: 2100 psig
8. Pressure-seal-joint fittings may be used in accessible locations only.
   a. Accessible locations include those exposed on interior of building, in mechanical rooms and aboveground outdoors.

2.3 STEEL PIPE AND FITTINGS

A. Steel Pipe: ASTM A 53/A 53M, black steel with plain ends; type, grade, and wall thickness as selected in piping application articles.

B. Wrought-Steel Fittings: ASTM A 234/A 234M, for welded joints.

C. Steel Flanges and Flanged Fittings: ASME B16.5, steel, including bolts, nuts, and gaskets, bevel-welded end connection, and raised face.

D. Welding Filler Metals: Comply with AWS D10.12M/D10.12 for welding materials appropriate for wall thickness and chemical analysis of steel pipe being welded.

E. Flanged Unions:

1. Body: Forged-steel flanges for NPS 1 to NPS 1-1/2 and ductile iron for NPS 2 to NPS 3. Apply rust-resistant finish at factory.
2. Gasket: Fiber asbestos free.
3. Fasteners: Four plated-steel bolts, with silicon bronze nuts. Apply rust-resistant finish at factory.
4. End Connections: Brass tailpiece adapters for solder-end connections to copper tubing.
5. Offset Performance: Capable of minimum 3/4-inch misalignment in minimum 7-inch-long assembly.
6. Pressure Rating: Factory test at minimum 400 psig.
7. Maximum Operating Temperature: 330 deg F.

F. Flexible Connectors:

1. Body: Stainless-steel bellows with woven, flexible, stainless-steel-wire-reinforced protective jacket.
2. End Connections:

   a. NPS 2 and Smaller: With threaded-end connections.
   b. NPS 2-1/2 and Larger: With flanged-end connections.

3. Offset Performance: Capable of minimum 3/4-inch misalignment in minimum 7-inch-long assembly.
4. Pressure Rating: Factory test at minimum 500 psig.
5. Maximum Operating Temperature: 250 deg F.

2.4 VALVES AND SPECIALTIES

A. Diaphragm Packless Valves:

1. Manufacturers: Subject to compliance with requirements, provide products by one of the following:

   a. Danfoss, Inc.
   b. Henry Technologies Inc.; The Henry Group.
   c. Parker Hannifin Corp.

2. Body and Bonnet: Forged brass or cast bronze; globe design with straight-through or angle pattern.
3. Diaphragm: Phosphor bronze and stainless steel with stainless-steel spring.
4. Operator: Rising stem and hand wheel.
5. Seat: Nylon.
6. End Connections: Socket, union, or flanged.
7. Working Pressure Rating: 500 psig.
8. Maximum Operating Temperature: 275 deg F.

B. Packed-Angle Valves:

1. Manufacturers: Subject to compliance with requirements, provide products by one of the following:

a. Danfoss, Inc.
b. Henry Technologies Inc.; The Henry Group.
c. Parker Hannifin Corp.

2. Body and Bonnet: Forged brass or cast bronze.
3. Packing: Molded stem, back seating, and replaceable under pressure.
4. Operator: Rising stem.
5. Seat: Nonrotating, self-aligning polytetrafluoroethylene.
6. Seal Cap: Forged-brass or valox hex cap.
7. End Connections: Socket, union, threaded, or flanged.
8. Working Pressure Rating: 500 psig.
9. Maximum Operating Temperature: 275 deg F.

C. Check Valves:

1. Manufacturers: Subject to compliance with requirements, provide products by one of the following:

a. Apollo Valves; a part of Aalberts Integrated Piping Systems.
b. Danfoss, Inc.
c. Emerson Climate Technologies; Emerson Electric Co.
d. Henry Technologies Inc.; The Henry Group.
e. Parker Hannifin Corp.

2. Body: Ductile iron, forged brass, or cast bronze; globe pattern.
3. Bonnet: Bolted ductile iron, forged brass, or cast bronze; or brass hex plug.
4. Piston: Removable polytetrafluoroethylene seat.
5. Closing Spring: Stainless steel.
6. End Connections: Socket, union, threaded, or flanged.
7. Maximum Opening Pressure: 0.50 psig.
8. Working Pressure Rating: 500 psig.
9. Maximum Operating Temperature: 275 deg F.

D. Service Valves:

1. Manufacturers: Subject to compliance with requirements, provide products by one of the following:

a. Danfoss, Inc.
b. Emerson Climate Technologies; Emerson Electric Co.
c. Henry Technologies Inc.; The Henry Group.
d. Parker Hannifin Corp.
e. RectorSeal HVAC; a CSW Industrials Company.
f. Refrigeration Sales, Inc.

2. Body: Forged brass with brass cap including key end to remove core.
3. Core: Removable ball-type check valve with stainless-steel spring.
4. Seat: Polytetrafluoroethylene.
5. End Connections: Copper spring.
6. Working Pressure Rating: 500 psig.

E. Refrigerant Locking Caps:

1. Manufacturers: Subject to compliance with requirements, provide products by one of the following:

a. C & D Valve, LLC.
b. JB Industries.
c. RectorSeal HVAC; a CSW Industrials Company.
d. Refrigeration Sales, Inc.

2. Description: Locking-type, tamper-resistant, threaded caps to protect refrigerant charging ports from unauthorized refrigerant access and leakage.
3. Material: Brass, with protective shroud or sleeve.
4. Refrigerant Identification: Color-coded, refrigerant specific or Universal design.
5. Special Tool: For installing and unlocking.

F. Solenoid Valves: Comply with AHRI 760 and UL 429; listed and labeled by a National Recognized Testing Laboratory (NRTL).

1. Manufacturers: Subject to compliance with requirements, provide products by one of the following:

a. Danfoss, Inc.
b. Emerson Climate Technologies; Emerson Electric Co.
c. Henry Technologies Inc.; The Henry Group.
d. Parker Hannifin Corp.

2. Body and Bonnet: Plated steel.
3. Solenoid Tube, Plunger, Closing Spring, and Seat Orifice: Stainless steel.
4. Seat: Polytetrafluoroethylene.
5. End Connections: Threaded.
6. Electrical: Molded, watertight coil in NEMA 250 enclosure of type required by location with 1/2-inch conduit adapter, and 24-V ac coil.
7. Working Pressure Rating: 400 psig.
8. Maximum Operating Temperature: 240 deg F.

G. Safety Relief Valves: Comply with 2010 ASME Boiler and Pressure Vessel Code; listed and labeled by an NRTL.

1. Manufacturers: Subject to compliance with requirements, provide products by one of the following:

a. Danfoss, Inc.
b. Henry Technologies Inc.; The Henry Group.
c. Parker Hannifin Corp.

2. Body and Bonnet: Ductile iron and steel, with neoprene O-ring seal.
3. Piston, Closing Spring, and Seat Insert: Stainless steel.
4. Seat: Polytetrafluoroethylene.
5. End Connections: Threaded.
6. Working Pressure Rating: 400 psig.
7. Maximum Operating Temperature: 240 deg F.

H. Thermostatic Expansion Valves: Comply with AHRI 750.

1. Manufacturers: Subject to compliance with requirements, provide products by one of the following:

a. Danfoss, Inc.
b. Emerson Climate Technologies; Emerson Electric Co.

c. Henry Technologies Inc.; The Henry Group.

2. Body, Bonnet, and Seal Cap: Forged brass or steel.
3. Diaphragm, Piston, Closing Spring, and Seat Insert: Stainless steel.
4. Packing and Gaskets: Non-asbestos.
5. Capillary and Bulb: Copper tubing filled with refrigerant charge.
6. Suction Temperature: 40 deg F.
7. Superheat: Adjustable.
8. Reverse-flow option (for heat-pump applications).
9. End Connections: Socket, flare, or threaded union.
10. Working Pressure Rating: 700 psig.

I. Hot-Gas Bypass Valves: Comply with UL 429; listed and labeled by an NRTL.

1. Manufacturers: Subject to compliance with requirements, provide products by one of the following:

a. Danfoss, Inc.
b. Henry Technologies Inc.; The Henry Group.
c. Parker Hannifin Corp.

2. Body, Bonnet, and Seal Cap: Ductile iron or steel.
3. Diaphragm, Piston, Closing Spring, and Seat Insert: Stainless steel.
4. Packing and Gaskets: Non-asbestos.
5. Solenoid Tube, Plunger, Closing Spring, and Seat Orifice: Stainless steel.
6. Seat: Polytetrafluoroethylene.
7. Equalizer: Internal or External.
8. Electrical: Molded, watertight coil in NEMA 250 enclosure of type required by location with 1/2-inch conduit adapter and 24-V ac coil.
9. End Connections: Socket.
10. Set Pressure: As required by application.
11. Throttling Range: Maximum 5 psig.
12. Working Pressure Rating: 500 psig.
13. Maximum Operating Temperature: 240 deg F.

J. Straight-Type Strainers:

1. Manufacturers: Subject to compliance with requirements, provide products by one of the following:

a. Danfoss, Inc.
b. Henry Technologies Inc.; The Henry Group.
c. Parker Hannifin Corp.

2. Body: Welded steel with corrosion-resistant coating.
3. Screen: 100-mesh stainless steel.
4. End Connections: Socket or flare.
5. Working Pressure Rating: 500 psig.
6. Maximum Operating Temperature: 275 deg F.

K. Angle-Type Strainers:

1. Manufacturers: Subject to compliance with requirements, provide products by one of the following:

a. Danfoss, Inc.
b. Henry Technologies Inc.; The Henry Group.
c. Parker Hannifin Corp.

2. Body: Forged brass or cast bronze.
3. Drain Plug: Brass hex plug.
4. Screen: 100-mesh monel.
5. End Connections: Socket or flare.
6. Working Pressure Rating: 500 psig.
7. Maximum Operating Temperature: 275 deg F.

L. Moisture/Liquid Indicators:

1. Manufacturers: Subject to compliance with requirements, provide products by one of the following:

a. Danfoss, Inc.
b. Emerson Climate Technologies; Emerson Electric Co.
c. Henry Technologies Inc.; The Henry Group.
d. Parker Hannifin Corp.

2. Body: Forged brass.
3. Window: Replaceable, clear, fused glass window with indicating element protected by filter screen.
4. Indicator: Color coded to show moisture content in parts per million (ppm).
5. Minimum Moisture Indicator Sensitivity: Indicate moisture above 60 ppm.
6. End Connections: Socket or flare.
7. Working Pressure Rating: 500 psig.
8. Maximum Operating Temperature: 240 deg F.

M. Replaceable-Core Filter Dryers: Comply with AHRI 730.

1. Manufacturers: Subject to compliance with requirements, provide products by one of the following:

a. Danfoss, Inc.
b. Emerson Climate Technologies; Emerson Electric Co.
c. Henry Technologies Inc.; The Henry Group.
d. Parker Hannifin Corp.

2. Body and Cover: Painted-steel shell with ductile-iron cover, stainless-steel screws, and neoprene gaskets.
3. Filter Media: 10 micron, pleated with integral end rings; stainless-steel support.
4. Desiccant Media: Activated alumina or charcoal.
5. Designed for reverse flow (for heat-pump applications).
6. End Connections: Socket.
7. Access Ports: NPS 1/4 connections at entering and leaving sides for pressure differential measurement.
8. Maximum Pressure Loss: 2 psig.
9. Rated Flow: See plans.
10. Working Pressure Rating: 500 psig.
11. Maximum Operating Temperature: 240 deg F.

N. Permanent Filter Dryers: Comply with AHRI 730.

1. Manufacturers: Subject to compliance with requirements, provide products by one of the following:

    a. Danfoss, Inc.
    b. Emerson Climate Technologies; Emerson Electric Co.
    c. Henry Technologies Inc.; The Henry Group.
    d. Parker Hannifin Corp.

2. Body and Cover: Painted-steel shell.
3. Filter Media: 10 micron, pleated with integral end rings; stainless-steel support.
4. Desiccant Media: Activated alumina or charcoal.
5. Designed for reverse flow (for heat-pump applications).
6. End Connections: Socket.
7. Access Ports: NPS 1/4 connections at entering and leaving sides for pressure differential measurement.
8. Maximum Pressure Loss: 2 psig.
9. Rated Flow: See plans.
10. Working Pressure Rating: 500 psig.
11. Maximum Operating Temperature: 240 deg F.

O. Mufflers:

1. Manufacturers: Subject to compliance with requirements, provide products by one of the following:

    a. Danfoss, Inc.
    b. Emerson Climate Technologies; Emerson Electric Co.
    c. Henry Technologies Inc.; The Henry Group.

2. Body: Welded steel with corrosion-resistant coating.
3. End Connections: Socket or flare.
4. Working Pressure Rating: 500 psig.
5. Maximum Operating Temperature: 275 deg F.

P. Receivers: Comply with AHRI 495.

1. Manufacturers: Subject to compliance with requirements, available manufacturers offering products that may be incorporated into the Work include, but are not limited to the following:

    a. Henry Technologies Inc.; The Henry Group.

2. Comply with 2010 ASME Boiler and Pressure Vessel Code; listed and labeled by an NRTL.
3. Comply with UL 207; listed and labeled by an NRTL.
4. Body: Welded steel with corrosion-resistant coating.
5. Tappings: Inlet, outlet, liquid level indicator, and safety relief valve.
6. End Connections: Socket or threaded.
7. Working Pressure Rating: 500 psig.
8. Maximum Operating Temperature: 275 deg F.

Q. Liquid Accumulators: Comply with AHRI 495.

1. Manufacturers: Subject to compliance with requirements, provide products by one of the following:

    a. Emerson Climate Technologies; Emerson Electric Co.

b. Henry Technologies Inc.; The Henry Group.
c. Parker Hannifin Corp.

2. Body: Welded steel with corrosion-resistant coating.
3. End Connections: Socket or threaded.
4. Working Pressure Rating: 500 psig.
5. Maximum Operating Temperature: 275 deg F.

2.5 REFRIGERANTS

A. ASHRAE 34, R-134a: Tetrafluoroethane.

1. Manufacturers: Subject to compliance with requirements, provide products by one of the following:

a. Arkema Inc.
b. Chemours (Formerly DuPont).
c. Genetron Refrigerants; Honeywell International Inc.
d. Mexichem Fluor, Inc. (Koura).

B. ASHRAE 34, R-407C: Difluoromethane/Pentafluoroethane/1,1,1,2-Tetrafluoroethane.

1. Manufacturers: Subject to compliance with requirements, provide products by one of the following:

a. Arkema Inc.
b. Chemours (Formerly DuPont).
c. Genetron Refrigerants; Honeywell International Inc.
d. Mexichem Fluor, Inc. (Koura).

C. ASHRAE 34, R-410A: Pentafluoroethane/Difluoromethane.

1. Manufacturers: Subject to compliance with requirements, provide products by one of the following:

a. Arkema Inc.
b. Chemours (Formerly DuPont).
c. Genetron Refrigerants; Honeywell International Inc.
d. Mexichem Fluor, Inc. (Koura).

PART 3 - EXECUTION

3.1 PIPING APPLICATION SCHEDULES

A. Refrigerant: R-134a, R-407C, or R-410A

B. Suction, Hot-Gas, and Liquid Tubing for Conventional Air-Conditioning (Cooling-Only) Applications, NPS 4 (DN 100) and Smaller: Copper, Type ACR, drawn-temper tubing and wrought-copper fittings with brazed or soldered joints.

C. Safety-Relief-Valve Discharge Tubing for Conventional Air-Conditioning (Cooling-Only) Applications, Copper: Type ACR, drawn-temper tubing and wrought-copper fittings with brazed or soldered joints.

D. Suction, Hot-Gas, and Liquid Tubing for Heat-Pump Applications, NPS 4 (DN 100) and Smaller: Copper, Type ACR, drawn-temper tubing and wrought-copper fittings with brazed or soldered joints.

E. Safety-Relief-Valve Discharge Tubing for Heat-Pump Applications, Copper: Type ACR, drawn-temper tubing and wrought-copper fittings with brazed or soldered joints

3.2 VALVE AND SPECIALTY APPLICATIONS

A. Install diaphragm packless OR packed-angle valves in suction and discharge lines of compressor.

B. Install service valves for gauge taps at inlet and outlet of hot-gas bypass valves and strainers if they are not an integral part of valves and strainers.

C. Install a check valve at the compressor discharge and a liquid accumulator at the compressor suction connection.

D. Except as otherwise indicated, install diaphragm packless OR packed-angle valves on inlet and outlet side of filter dryers.

E. Install a full-size, three-valve bypass around filter dryers.

F. Install solenoid valves upstream from each expansion valve and hot-gas bypass valve. Install solenoid valves in horizontal lines with coil at top.

G. Install thermostatic expansion valves as close as possible to distributors on evaporators.

1. Install valve so diaphragm case is warmer than bulb.
2. Secure bulb to clean, straight, horizontal section of suction line using two bulb straps. Do not mount bulb in a trap or at bottom of the line.
3. If external equalizer lines are required, make connection where it will reflect suction-line pressure at bulb location.

H. Install safety relief valves where required by 2010 ASME Boiler and Pressure Vessel Code. Pipe safety-relief-valve discharge line to outside according to ASHRAE 15.

I. Install moisture/liquid indicators in liquid line at the inlet of the thermostatic expansion valve or at the inlet of the evaporator coil capillary tube.

J. Install strainers upstream from and adjacent to the following unless they are furnished as an integral assembly for the device being protected:

1. Solenoid valves.
2. Thermostatic expansion valves.
3. Hot-gas bypass valves.
4. Compressor.

K. Install filter dryers in liquid line between compressor and thermostatic expansion valve, and in the suction line at the compressor.

L. Install receivers sized to accommodate pump-down charge.

M. Install flexible connectors at compressors.

N. Provide refrigerant locking caps on refrigerant charging ports that are located outdoors unless otherwise protected from unauthorized access by a means acceptable to the authority having jurisdiction.

3.3 INSTALLATION OF PIPING, GENERAL

A. Drawing plans, schematics, and diagrams indicate general location and arrangement of piping systems; indicated locations and arrangements were used to size pipe and calculate friction loss, expansion, pump sizing, and other design considerations. Install piping as indicated unless deviations to layout are approved on Shop Drawings.

B. Install refrigerant piping according to ASHRAE 15.

C. Install piping in concealed locations unless otherwise indicated and except in equipment rooms and service areas.

D. Install piping indicated to be exposed and piping in equipment rooms and service areas at right angles or parallel to building walls. Diagonal runs are prohibited unless specifically indicated otherwise.

E. Install piping above accessible ceilings to allow sufficient space for ceiling panel removal.

F. Install piping adjacent to machines to allow service and maintenance.

G. Install piping free of sags and bends.

H. Install fittings for changes in direction and branch connections.

I. Select system components with pressure rating equal to or greater than system operating pressure.

J. Where pressure seal joint fittings are used:
   1. Install fittings as recommended by manufacturer.
   2. Installer shall ensure piping is spaced such that the crimp gauge can fit around the pipes to check for proper crimp.
   3. Test every crimp joint with crimp gauge.
   4. System leak checks shall be done per the manufacturer’s instructions.

K. Refer to Section 230923 "Direct Digital Control (DDC) System for HVAC" and Section 230993.11 "Sequence of Operations for HVAC DDC" for solenoid valve controllers, control wiring, and sequence of operation.

L. Install piping as short and direct as possible, with a minimum number of joints, elbows, and fittings.

M. Arrange piping to allow inspection and service of refrigeration equipment. Install valves and specialties in accessible locations to allow for service and inspection. Install access doors or panels as specified in Section 083113 "Access Doors and Frames" if valves or equipment requiring maintenance is concealed behind finished surfaces.

N. Install refrigerant piping in protective conduit where installed belowground.

O. Install refrigerant piping in rigid or flexible conduit in locations where exposed to mechanical injury.

P. Slope refrigerant piping as follows:

1. Install horizontal hot-gas discharge piping with a uniform slope downward away from compressor.
2. Install horizontal suction lines with a uniform slope downward to compressor.
3. Install traps and double risers to entrain oil in vertical runs.
4. Liquid lines may be installed level.

Q. When brazing or soldering, remove solenoid-valve coils and sight glasses; also remove valve stems, seats, and packing, and accessible internal parts of refrigerant specialties. Do not apply heat near expansion-valve bulb.

R. Before installation of steel refrigerant piping, clean pipe and fittings using the following procedures:

1. Shot blast the interior of piping.
2. Remove coarse particles of dirt and dust by drawing a clean, lintless cloth through tubing by means of a wire or electrician's tape.
3. Draw a clean, lintless cloth saturated with trichloroethylene through the tube or pipe. Continue this procedure until cloth is not discolored by dirt.
4. Draw a clean, lintless cloth, saturated with compressor oil, squeezed dry, through the tube or pipe to remove remaining lint. Inspect tube or pipe visually for remaining dirt and lint.
5. Finally, draw a clean, dry, lintless cloth through the tube or pipe.
6. Safety-relief-valve discharge piping is not required to be cleaned but is required to be open to allow unrestricted flow.

S. Install piping with adequate clearance between pipe and adjacent walls and hangers or between pipes for insulation installation.

T. Identify refrigerant piping and valves according to Section 230553 "Identification for HVAC Piping and Equipment."

U. Install sleeves for piping penetrations of walls, ceilings, and floors. Comply with requirements for sleeves specified in Section 230517 "Sleeves and Sleeve Seals for HVAC Piping."

V. Install sleeve seals for piping penetrations of concrete walls and slabs. Comply with requirements for sleeve seals specified in Section 230517 "Sleeves and Sleeve Seals for HVAC Piping."

W. Install escutcheons for piping penetrations of walls, ceilings, and floors. Comply with requirements for escutcheons specified in Section 230518 "Escutcheons for HVAC Piping."

3.4 PIPE JOINT CONSTRUCTION

A. Ream ends of pipes and tubes and remove burrs. Bevel plain ends of steel pipe.

B. Remove scale, slag, dirt, and debris from inside and outside of pipe and fittings before assembly.

C. Fill pipe and fittings with an inert gas (nitrogen or carbon dioxide), during brazing or welding, to prevent scale formation.

D. Soldered Joints: Construct joints according to ASTM B 828 or CDA's "Copper Tube Handbook."

E. Brazed Joints: Construct joints according to AWS's "Brazing Handbook," Chapter "Pipe and Tube."

1. Use Type BCuP (copper-phosphorus) alloy for joining copper socket fittings with copper pipe.
2. Use Type BAg (cadmium-free silver) alloy for joining copper with bronze or steel.

F. Threaded Joints: Thread steel pipe with tapered pipe threads according to ASME B1.20.1. Cut threads full and clean using sharp dies. Ream threaded pipe ends to remove burrs and to restore full ID. Join pipe fittings and valves as follows:

1. Apply appropriate tape or thread compound to external pipe threads unless dry-seal threading is specified.
2. Damaged Threads: Do not use pipe or pipe fittings with threads that are corroded or damaged. Do not use pipe sections that have cracked or open welds.

G. Steel pipe can be threaded, but threaded joints must be seal brazed or seal welded.

H. Welded Joints: Construct joints according to AWS D10.12M/D10.12.

I. Flanged Joints: Select appropriate gasket material, size, type, and thickness for service application. Install gasket concentrically positioned. Use suitable lubricants on bolt threads.

3.5 INSTALLATION OF HANGERS AND SUPPORTS

A. Comply with requirements for seismic restraints in Section 230548 "Vibration and Seismic Controls for HVAC."

B. Comply with Section 230529 "Hangers and Supports for HVAC Piping and Equipment" for hangers, supports, and anchor devices.

C. Install the following pipe attachments:

1. Adjustable steel clevis hangers for individual horizontal runs less than 20 feet long.
2. Roller hangers and spring hangers for individual horizontal runs 20 feet or longer.
3. Pipe Roller: MSS SP-58, Type 44 for multiple horizontal piping 20 feet or longer, supported on a trapeze.
4. Spring hangers to support vertical runs.
5. Copper-clad hangers and supports for hangers and supports in direct contact with copper pipe.

D. Install hangers for copper tubing and steel piping, with maximum horizontal spacing and minimum rod diameters, to comply with MSS-58, locally enforced codes, and authorities having jurisdiction requirements, whichever are most stringent.

E. Support horizontal piping within 12 inches of each fitting.

F. Support vertical runs of copper tubing and steel piping to comply with MSS-58, locally enforced codes, and authorities having jurisdiction requirements, whichever are most stringent.

3.6 FIELD QUALITY CONTROL

A. Testing Agency: Engage a qualified testing agency to perform tests and inspections.

B. Perform the following tests and inspections:

1. Comply with ASME B31.5, Chapter VI.
2. Test refrigerant piping, specialties, and receivers. Isolate compressor, condenser, evaporator, and safety devices from test pressure if they are not rated above the test pressure.
3. Test high- and low-pressure side piping of each system separately at not less than the pressures indicated in "Performance Requirements" Article.

    a. Fill system with nitrogen to the required test pressure.
    b. System shall maintain test pressure at the manifold gage throughout duration of test.
    c. Test joints and fittings with electronic leak detector or by brushing a small amount of soap and glycerin solution over joints.
    d. Remake leaking joints using new materials, and retest until satisfactory results are achieved.

C. Prepare test and inspection reports.

3.7 SYSTEM CHARGING

A. Charge system using the following procedures:

1. Install core in filter dryers after leak test but before evacuation.
2. Evacuate entire refrigerant system with a vacuum pump to 500 micrometers. If vacuum holds for 12 hours, system is ready for charging.
3. Break vacuum with refrigerant gas, allowing pressure to build up to 2 psig.
4. Charge system with a new filter-dryer core in charging line.

3.8 ADJUSTING

A. Adjust thermostatic expansion valve to obtain proper evaporator superheat.

B. Adjust high- and low-pressure switch settings to avoid short cycling in response to fluctuating suction pressure.

C. Adjust set-point temperature of air-conditioning or chilled-water controllers to the system design temperature.

D. Perform the following adjustments before operating the refrigeration system, according to manufacturer's written instructions:

1. Open shutoff valves in condenser water circuit.
2. Verify that compressor oil level is correct.
3. Open compressor suction and discharge valves.
4. Open refrigerant valves except bypass valves that are used for other purposes.
5. Check open compressor-motor alignment and verify lubrication for motors and bearings.

E. Replace core of replaceable filter dryer after system has been adjusted and after design flow rates and pressures are established.

END OF SECTION 23 23 00

SECTION 23 31 13 - METAL DUCTS

PART 1 - GENERAL

1.1 RELATED DOCUMENTS

A. Drawings and general provisions of the Contract, including General and Supplementary Conditions and Division 01 Specification Sections, apply to this Section.

1.2 SUMMARY

A. Section Includes:

1. Single-wall rectangular ducts and fittings.
2. Double-wall rectangular ducts and fittings.
3. Single-wall round ducts and fittings.
4. Double-wall round ducts and fittings.
5. Sheet metal materials.
6. Duct liner.
7. Sealants and gaskets.
8. Hangers and supports.
9. Seismic-restraint devices.

B. Related Sections:

1. Section 230593 "Testing, Adjusting, and Balancing for HVAC" for testing, adjusting, and balancing requirements for metal ducts.
2. Section 233116 "Nonmetal Ducts" for fibrous-glass ducts, thermoset fiber-reinforced plastic ducts, thermoplastic ducts, PVC ducts, and concrete ducts.
3. Section 233119 "HVAC Casings" for factory- and field-fabricated casings for mechanical equipment.
4. Section 233300 "Air Duct Accessories" for dampers, sound-control devices, duct-mounting access doors and panels, turning vanes, and flexible ducts.

1.3 DEFINITIONS

A. OSHPD: Office of Statewide Health Planning and Development (State of California).

1.4 ACTION SUBMITTALS

A. Product Data: For each type of the following products:

1. Liners and adhesives.
2. Sealants and gaskets.
3. Seismic-restraint devices.

B. Sustainable Design Submittals:

1. Product Data: For ventilation equipment, indicating compliance with ASHRAE 62.1, Section 5 - "Systems and Equipment."
2. Product Data: For adhesives, indicating VOC content.
3. Laboratory Test Reports: For adhesives, indicating compliance with requirements for low-emitting materials.
4. Product Data: For sealants, indicating VOC content.
5. Laboratory Test Reports: For sealants, indicating compliance with requirements for low-emitting materials.
6. Laboratory Test Reports: For antimicrobial coatings, indicating compliance with requirements for low-emitting materials.

C. Shop Drawings:

1. Fabrication, assembly, and installation, including plans, elevations, sections, components, and attachments to other work.
2. Factory- and shop-fabricated ducts and fittings.
3. Duct layout indicating sizes, configuration, liner material, and static-pressure classes.
4. Elevation of top and bottom of ducts.
5. Dimensions of all duct runs from building grid lines.
6. Fittings.
7. Reinforcement and spacing.
8. Seam and joint construction.
9. Penetrations through fire-rated and other partitions.
10. Equipment installation based on equipment being used on Project.
11. Locations for duct accessories, including dampers, turning vanes, and access doors and panels.
12. Hangers and supports, including methods for duct and building attachment, seismic restraints, and vibration isolation.

D. Delegated-Design Submittal:

1. Sheet metal thicknesses.
2. Joint and seam construction and sealing.
3. Reinforcement details and spacing.
4. Materials, fabrication, assembly, and spacing of hangers and supports.
5. Design Calculations: Calculations, including analysis data signed and sealed by the qualified professional engineer responsible for their preparation for selecting hangers and supports and seismic restraints.

1.5 INFORMATIONAL SUBMITTALS

A. Coordination Drawings: A single set of plans or BIM model, drawn to scale, showing the items described in this Section, and coordinated with all building trades.

B. Welding certificates.

C. Field quality-control reports.

1.6 QUALITY ASSURANCE

A. Welding Qualifications: Qualify procedures and personnel in accordance with the following:

1. AWS D1.1/D1.1M, "Structural Welding Code - Steel," for hangers and supports.

2. AWS D1.2/D1.2M, "Structural Welding Code - Aluminum," for aluminum supports.
3. AWS D9.1/D9.1M, "Sheet Metal Welding Code," for duct joint and seam welding.

PART 2 - PRODUCTS

2.1 PERFORMANCE REQUIREMENTS

A. Delegated Duct Design: Duct construction, including sheet metal thicknesses, seam and joint construction, reinforcements, and hangers and supports, shall comply with SMACNA's "HVAC Duct Construction Standards - Metal and Flexible" and with performance requirements and design criteria indicated in "Duct Schedule" Article.

B. Structural Performance: Duct hangers and supports and seismic restraints shall withstand the effects of gravity and seismic loads and stresses within limits and under conditions described in SMACNA's "HVAC Duct Construction Standards - Metal and Flexible" and ASCE/SEI 7.

C. Airstream Surfaces: Surfaces in contact with airstream shall comply with requirements in ASHRAE 62.1.

D. ASHRAE Compliance: Applicable requirements in ASHRAE 62.1, Section 5 - "Systems and Equipment," and Section 7 - "Construction and System Startup."

E. ASHRAE/IES Compliance: Applicable requirements in ASHRAE/IES 90.1, Section 6.4.4 - "HVAC System Construction and Insulation."

F. Duct Dimensions: Unless otherwise indicated, all duct dimensions indicated on Drawings are inside clear dimensions and do not include insulation or duct wall thickness.

2.2 SINGLE-WALL RECTANGULAR DUCTS AND FITTINGS

A. General Fabrication Requirements: Comply with SMACNA's "HVAC Duct Construction Standards - Metal and Flexible" based on indicated static-pressure class unless otherwise indicated.

1. Construct ducts of galvanized sheet steel unless otherwise indicated.
2. For ducts exposed to weather, construct of Type 304 stainless steel indicated by manufacturer to be suitable for outdoor installation.

B. Transverse Joints: Fabricate joints in accordance with SMACNA's "HVAC Duct Construction Standards - Metal and Flexible," Figure 2-1, "Rectangular Duct/Transverse Joints," for static-pressure class, applicable sealing requirements, materials involved, duct-support intervals, and other provisions in SMACNA's "HVAC Duct Construction Standards - Metal and Flexible."

1. For ducts with longest side less than 36 inches, select joint types in accordance with Figure 2-1.
2. For ducts with longest side 36 inches or greater, use flange joint connector Type T-22, T-24, T-24A, T-25a, or T-25b. Factory-fabricated flanged duct connection system may be used if submitted and approved by engineer of record.
3. Where specified for specific applications, all joints shall be welded.

C. Longitudinal Seams: Select seam types and fabricate in accordance with SMACNA's "HVAC Duct Construction Standards - Metal and Flexible," Figure 2-2, "Rectangular Duct/Longitudinal Seams," for static-pressure class, applicable sealing requirements, materials involved, duct-

support intervals, and other provisions in SMACNA's "HVAC Duct Construction Standards - Metal and Flexible." All longitudinal seams shall be Pittsburgh lock seams unless otherwise specified for specific application.

1. Where specified for specific applications, all joints shall be welded.

D. Elbows, Transitions, Offsets, Branch Connections, and Other Duct Construction: Select types and fabricate in accordance with SMACNA's "HVAC Duct Construction Standards - Metal and Flexible," Ch. 4, "Fittings and Other Construction," for static-pressure class, applicable sealing requirements, materials involved, duct-support intervals, and other provisions in SMACNA's "HVAC Duct Construction Standards - Metal and Flexible."

2.3 DOUBLE-WALL RECTANGULAR DUCTS AND FITTINGS

A. Manufacturers: Subject to compliance with requirements, provide products by one of the following:

1. McGill AirFlow LLC.
2. MKT Metal Manufacturing.
3. Sheet Metal Connectors, Inc.

B. Rectangular Ducts: Fabricate ducts with indicated dimensions for clear internal dimensions of the inner duct.

C. Outer Duct: Comply with SMACNA's "HVAC Duct Construction Standards - Metal and Flexible" based on indicated static-pressure class unless otherwise indicated.

1. Construct ducts of galvanized sheet steel unless otherwise indicated.
2. For ducts exposed to weather, construct outer duct of Type 304 Type 316 stainless steel indicated by manufacturer to be suitable for outdoor installation.

D. Transverse Joints: Select joint types and fabricate in accordance with SMACNA's "HVAC Duct Construction Standards - Metal and Flexible," Figure 2-1, "Rectangular Duct/Transverse Joints," for static-pressure class, applicable sealing requirements, materials involved, duct-support intervals, and other provisions in SMACNA's "HVAC Duct Construction Standards - Metal and Flexible."

1. For ducts with longest side less than 36 inches, select joint types in accordance with Figure 2-1.
2. For ducts with longest side 36 inches or greater, use flange joint connector Type T-22, T-24, T-24A, T-25a, or T-25b. Factory-fabricated flanged duct connection system may be used if submitted and approved by engineer of record.
3. Where specified for specific applications, all joints shall be welded.

E. Longitudinal Seams: Select seam types and fabricate in accordance with SMACNA's "HVAC Duct Construction Standards - Metal and Flexible," Figure 2-2, "Rectangular Duct/Longitudinal Seams," for static-pressure class, applicable sealing requirements, materials involved, duct-support intervals, and other provisions in SMACNA's "HVAC Duct Construction Standards - Metal and Flexible." All longitudinal seams shall be Pittsburgh lock seams unless otherwise specified for specific application.

1. Where specified for specific applications, all joints shall be welded.

F. Interstitial Insulation: Fibrous-glass liner complying with ASTM C1071, NFPA 90A, or NFPA 90B; and with NAIMA AH124, "Fibrous Glass Duct Liner Standard."

1. Maximum Thermal Conductivity: 0.27 Btu x in./h x sq. ft. x deg F at 75 deg F mean temperature.
2. Install spacers that position the inner duct at uniform distance from outer duct without compressing insulation.
3. Coat insulation with antimicrobial coating.
4. Cover insulation with polyester film complying with UL 181, Class 1.

G. Inner Duct: Minimum 24-gauge perforated galvanized sheet steel having 3/32-inch-diameter perforations, with overall open area of 23 percent.

2.4 SINGLE-WALL ROUND DUCTS AND FITTINGS

A. General Fabrication Requirements: Comply with SMACNA's "HVAC Duct Construction Standards - Metal and Flexible," Ch. 3, "Round, Oval, and Flexible Duct," based on indicated static-pressure class unless otherwise indicated.

1. Construct ducts of galvanized sheet steel unless otherwise indicated.
2. For ducts exposed to weather, construct of Type 304 stainless steel indicated by manufacturer to be suitable for outdoor installation.

3. Manufacturers: Subject to compliance with requirements, available manufacturers offering products that may be incorporated into the Work include, but are not limited to the following:

a. McGill AirFlow LLC.

B. Transverse Joints: Select joint types and fabricate in accordance with SMACNA's "HVAC Duct Construction Standards - Metal and Flexible," Figure 3-1, "Round Duct Transverse Joints," for static-pressure class, applicable sealing requirements, materials involved, duct-support intervals, and other provisions in SMACNA's "HVAC Duct Construction Standards - Metal and Flexible."

1. Transverse Joints in Ducts Larger Than 60 Inches in Diameter: Flanged.

C. Longitudinal Seams: Select seam types and fabricate in accordance with SMACNA's "HVAC Duct Construction Standards - Metal and Flexible," Figure 3-2, "Round Duct Longitudinal Seams," for static-pressure class, applicable sealing requirements, materials involved, duct-support intervals, and other provisions in SMACNA's "HVAC Duct Construction Standards - Metal and Flexible."

1. Fabricate round ducts larger than 90 inches in diameter with butt-welded longitudinal seams.
2. Fabricate flat-oval ducts larger than 72 inches in width (major dimension) with butt-welded longitudinal seams.

D. Tees and Laterals: Select types and fabricate in accordance with SMACNA's "HVAC Duct Construction Standards - Metal and Flexible," Figure 3-5, "90 Degree Tees and Laterals," and Figure 3-6, "Conical Tees," for static-pressure class, applicable sealing requirements, materials involved, duct-support intervals, and other provisions in SMACNA's "HVAC Duct Construction Standards - Metal and Flexible."

2.5 DOUBLE-WALL ROUND DUCTS AND FITTINGS

A. Manufacturers: Subject to compliance with requirements, available manufacturers offering products that may be incorporated into the Work include, but are not limited to the following:

1. McGill AirFlow LLC.

B. Flat-Oval Ducts: Indicated dimensions are the duct width (major dimension) and diameter of the round sides connecting the flat portions of the duct (minor dimension) of the inner duct.

1. Outer Duct: Comply with SMACNA's "HVAC Duct Construction Standards - Metal and Flexible," Ch. 3, "Round, Oval, and Flexible Duct," based on static-pressure class unless otherwise indicated.

a. Construct ducts of galvanized sheet steel unless otherwise indicated.
b. For ducts exposed to weather, construct outer duct of Type 304 stainless steel indicated by manufacturer to be suitable for outdoor installation.

2. Transverse Joints: Select joint types and fabricate in accordance with SMACNA's "HVAC Duct Construction Standards - Metal and Flexible," Figure 3-1, "Round Duct Transverse Joints," for static-pressure class, applicable sealing requirements, materials involved, duct-support intervals, and other provisions in SMACNA's "HVAC Duct Construction Standards - Metal and Flexible."

a. Transverse Joints in Ducts Larger Than 60 Inches in Diameter: Flanged.

3. Longitudinal Seams: Select seam types and fabricate in accordance with SMACNA's "HVAC Duct Construction Standards - Metal and Flexible," Figure 3-2, "Round Duct Longitudinal Seams," for static-pressure class, applicable sealing requirements, materials involved, duct-support intervals, and other provisions in SMACNA's "HVAC Duct Construction Standards - Metal and Flexible."

a. Fabricate round ducts larger than 90 inches in diameter with butt-welded longitudinal seams.
b. Fabricate flat-oval ducts larger than 72 inches in width (major dimension) with butt-welded longitudinal seams.

4. Tees and Laterals: Select types and fabricate in accordance with SMACNA's "HVAC Duct Construction Standards - Metal and Flexible," Figure 3-5, "90 Degree Tees and Laterals," and Figure 3-6, "Conical Tees," for static-pressure class, applicable sealing requirements, materials involved, duct-support intervals, and other provisions in SMACNA's "HVAC Duct Construction Standards - Metal and Flexible."

C. Inner Duct: Minimum 24-gauge perforated galvanized sheet steel having 3/32-inch-diameter perforations, with overall open area of 23 percent.

D. Interstitial Insulation: Fibrous-glass liner complying with ASTM C1071, NFPA 90A, or NFPA 90B; and with NAIMA AH124, "Fibrous Glass Duct Liner Standard."

1. Maximum Thermal Conductivity: 0.27 Btu x in./h x sq. ft. x deg F at 75 deg F mean temperature.
2. Install spacers that position the inner duct at uniform distance from outer duct without compressing insulation.
3. Coat insulation with antimicrobial coating.
4. Cover insulation with polyester film complying with UL 181, Class 1.

2.6 SHEET METAL MATERIALS

A. General Material Requirements: Comply with SMACNA's "HVAC Duct Construction Standards - Metal and Flexible" for acceptable materials, material thicknesses, and duct construction methods unless otherwise indicated. Sheet metal materials shall be free of pitting, seam marks, roller marks, stains, discolorations, and other imperfections.

B. Galvanized Sheet Steel: Comply with ASTM A653/A653M.

1. Galvanized Coating Designation: G90.
2. Finishes for Surfaces Exposed to View: Mill phosphatized.

C. PVC-Coated, Galvanized Sheet Steel: Comply with ASTM A653/A653M.

1. Galvanized Coating Designation: G90.
2. Minimum Thickness for Factory-Applied PVC Coating: 4 mils thick on sheet metal surface of ducts and fittings exposed to corrosive conditions, and minimum 1 mil thick on opposite surface.
3. Coating Materials: Acceptable to authorities having jurisdiction for use on ducts listed and labeled by an NRTL for compliance with UL 181, Class 1.

D. Carbon-Steel Sheets: Comply with ASTM A1008/A1008M, with oiled, matte finish for exposed ducts.

E. Stainless-Steel Sheets: Comply with ASTM A480/A480M, Type 304 or 316, as indicated in "Duct Schedule" Article; cold rolled, annealed, sheet. Exposed surface finish shall be No. 2B, No. 2D, No. 3, or No. 4 as indicated in "Duct Schedule" Article.

F. Aluminum Sheets: Comply with ASTM B209 Alloy 3003, H14 temper; with mill finish for concealed ducts, and standard, one-side bright finish for duct surfaces exposed to view.

G. Reinforcement Shapes and Plates: ASTM A36/A36M, steel plates, shapes, and bars; black and galvanized.

1. Where black- and galvanized-steel shapes and plates are used to reinforce aluminum ducts, isolate the different metals with butyl rubber, neoprene, or EPDM gasket materials.

H. Tie Rods: Galvanized steel, 1/4-inch-minimum diameter for lengths 36 inches or less; 3/8-inch-minimum diameter for lengths longer than 36 inches.

2.7 DUCT LINER

A. Fibrous-Glass Duct Liner: Comply with ASTM C1071, NFPA 90A, or NFPA 90B; and with NAIMA AH124, "Fibrous Glass Duct Liner Standard."

1. Manufacturers: Subject to compliance with requirements, provide products by one of the following:

a. Certainteed; SAINT-GOBAIN.
b. Johns Manville; a Berkshire Hathaway company.
c. Knauf Insulation.
d. Owens Corning.
e. Sekisui Voltek, LLC.

2. Maximum Thermal Conductivity:

   a. Type I, Flexible: 0.27 Btu x in./h x sq. ft. x deg F at 75 deg F mean temperature.
   b. Type II, Rigid: 0.23 Btu x in./h x sq. ft. x deg F at 75 deg F mean temperature.

3. Water-Based Liner Adhesive: Comply with NFPA 90A or NFPA 90B and with ASTM C916.

   a. Verify adhesive has a VOC content of 80 g/L or less.
   b. Verify adhesive complies with the testing and product requirements of the California Department of Public Health's "Standard Method for the Testing and Evaluation of Volatile Organic Chemical Emissions from Indoor Sources Using Environmental Chambers."

B. Flexible Elastomeric Duct Liner: Preformed, cellular, closed-cell, sheet materials complying with ASTM C534/C534M, Type II, Grade 1; and with NFPA 90A or NFPA 90B.

1. Manufacturers: Subject to compliance with requirements, provide products by one of the following:

   a. Aeroflex USA.
   b. Armacell LLC.
   c. Ductmate Industries, Inc; a DMI company.
   d. K-Flex USA.
   e. Sekisui Voltek, LLC.

2. Surface-Burning Characteristics: Maximum flame-spread index of 25 and maximum smoke-developed index of 50 when tested in accordance with UL 723; certified by an NRTL.
3. Liner Adhesive: As recommended by insulation manufacturer and complying with NFPA 90A or NFPA 90B.

   a. Verify adhesive has a VOC content of 80 g/L or less.
   b. Verify adhesive complies with the testing and product requirements of the California Department of Public Health's "Standard Method for the Testing and Evaluation of Volatile Organic Chemical Emissions from Indoor Sources Using Environmental Chambers."

C. Fiberglass-Free Duct Liner: Made from partially recycled cotton or polyester products and containing no fiberglass. Airstream surface overlaid with fire-resistant facing to prevent surface erosion by airstream, complying with NFPA 90A or NFPA 90B. Treat natural-fiber products with antimicrobial coating.

1. Manufacturers: Subject to compliance with requirements, provide products by one of the following:

   a. Acoustical Surfaces, Inc.
   b. Ductmate Industries, Inc; a DMI company.

2. Maximum Thermal Conductivity: 0.24 Btu x in./h x sq. ft. x deg F at 75 deg F mean temperature when tested in accordance with ASTM C518.
3. Surface-Burning Characteristics: Maximum flame-spread index of 25 and maximum smoke-developed index of 50 when tested in accordance with ASTM E84; certified by an NRTL.
4. Liner Adhesive: As recommended by insulation manufacturer and complying with NFPA 90A or NFPA 90B.

a. Verify adhesive has a VOC content of 80 g/L or less.
b. Verify adhesive complies with the testing and product requirements of the California Department of Public Health's "Standard Method for the Testing and Evaluation of Volatile Organic Chemical Emissions from Indoor Sources Using Environmental Chambers."

D. Insulation Pins and Washers:

1. Cupped-Head, Capacitor-Discharge-Weld Pins: Copper- or zinc-coated steel pin, fully annealed for capacitor-discharge welding, 0.106-inch- diameter shank, length to suit depth of insulation indicated with integral 1-1/2-inch galvanized carbon-steel washer.
2. Insulation-Retaining Washers: Self-locking washers formed from 0.016-inch-thick aluminum; with beveled edge sized as required to hold insulation securely in place, but not less than 1-1/2 inches in diameter.

E. Shop Application of Duct Liner: Comply with SMACNA's "HVAC Duct Construction Standards - Metal and Flexible," Figure 7-11, "Flexible Duct Liner Installation."

1. Adhere a single layer of indicated thickness of duct liner with at least 90 percent adhesive coverage at liner contact surface area. Attaining indicated thickness with multiple layers of duct liner is prohibited.
2. Apply adhesive to transverse edges of liner facing upstream that do not receive metal nosing.
3. Butt transverse joints without gaps, and coat joint with adhesive.
4. Fold and compress liner in corners of rectangular ducts or cut and fit to ensure butted-edge overlapping.
5. Do not apply liner in rectangular ducts with longitudinal joints, except at corners of ducts, unless duct size and dimensions of standard liner make longitudinal joints necessary.
6. Apply adhesive coating on longitudinal seams in ducts with air velocity of 2500 fpm or greater.
7. Secure liner with mechanical fasteners 4 inches from corners and at intervals not exceeding 12 inches transversely; at 3 inches from transverse joints and at intervals not exceeding 18 inches longitudinally.
8. Secure transversely oriented liner edges facing the airstream with metal nosings that have either channel or "Z" profiles or are integrally formed from duct wall. Fabricate edge facings at the following locations:

   a. Fan discharges.
   b. Intervals of lined duct preceding unlined duct.
   c. Upstream edges of transverse joints in ducts where air velocities are higher than 2500 fpm or where indicated.

9. Secure insulation between perforated sheet metal inner duct of same thickness as specified for outer shell. Use mechanical fasteners that maintain inner duct at uniform distance from outer shell without compressing insulation.

   a. Sheet Metal Inner Duct Perforations: 3/32-inch diameter, with an overall open area of 23 percent.

10. Terminate inner ducts with buildouts attached to fire-damper sleeves, dampers, turning vane assemblies, or other devices. Fabricated buildouts (metal hat sections) or other buildout means are optional; when used, secure buildouts to duct walls with bolts, screws, rivets, or welds.

2.8 SEALANT AND GASKETS

A. General Sealant and Gasket Requirements: Surface-burning characteristics for sealants and gaskets shall be a maximum flame-spread index of 25 and a maximum smoke-developed index of 50 when tested in accordance with UL 723; certified by an NRTL.

B. Two-Part Tape Sealing System:

1. Tape: Woven cotton fiber impregnated with mineral gypsum and modified acrylic/silicone activator to react exothermically with tape to form hard, durable, airtight seal.
2. Tape Width: 4 inches.
3. Sealant: Modified styrene acrylic.
4. Water resistant.
5. Mold and mildew resistant.
6. Maximum Static-Pressure Class: 10 inch wg, positive and negative.
7. Service: Indoor and outdoor.
8. Service Temperature: Minus 40 to plus 200 deg F.
9. Substrate: Compatible with galvanized sheet steel (both PVC coated and bare), stainless steel, or aluminum.
10. Verify sealant has a VOC content of 420 g/L or less.
11. Verify sealant complies with the testing and product requirements of the California Department of Public Health's "Standard Method for the Testing and Evaluation of Volatile Organic Chemical Emissions from Indoor Sources Using Environmental Chambers."

C. Water-Based Joint and Seam Sealant:

1. Application Method: Brush on.
2. Solids Content: Minimum 65 percent.
3. Shore A Hardness: Minimum 20.
4. Water resistant.
5. Mold and mildew resistant.
6. VOC: Maximum 75 g/L (less water).
7. Maximum Static-Pressure Class: 10 inch wg, positive and negative.
8. Service: Indoor or outdoor.
9. Substrate: Compatible with galvanized sheet steel (both PVC coated and bare), stainless steel, or aluminum sheets.

D. Solvent-Based Joint and Seam Sealant:

1. Application Method: Brush on.
2. Base: Synthetic rubber resin.
3. Solvent: Toluene and heptane.
4. Solids Content: Minimum 60 percent.
5. Shore A Hardness: Minimum 60.
6. Water resistant.
7. Mold and mildew resistant.
8. Verify sealant has a VOC content of 420 g/L or less.
9. Verify sealant complies with the testing and product requirements of the California Department of Public Health's "Standard Method for the Testing and Evaluation of Volatile Organic Chemical Emissions from Indoor Sources Using Environmental Chambers."
10. Maximum Static-Pressure Class: 10-inch wg, positive or negative.
11. Service: Indoor or outdoor.
12. Substrate: Compatible with galvanized sheet steel (both PVC coated and bare), stainless steel, or aluminum sheets.

E. Flanged Joint Sealant: Comply with ASTM C920.

1. General: Single-component, acid-curing, silicone, elastomeric.
2. Type: S.
3. Grade: NS.
4. Class: 25.
5. Use: O.
6. Verify sealant has a VOC content of 420 g/L or less.
7. Verify sealant complies with the testing and product requirements of the California Department of Public Health's "Standard Method for the Testing and Evaluation of Volatile Organic Chemical Emissions from Indoor Sources Using Environmental Chambers."

F. Flange Gaskets: Butyl rubber, neoprene, or EPDM polymer with polyisobutylene plasticizer.

G. Round Duct Joint O-Ring Seals:

1. Seal shall provide maximum leakage class of 3 cfm/100 sq. ft. at 1-inch wg and shall be rated for10-inch wg static-pressure class, positive or negative.
2. EPDM O-ring to seal in concave bead in coupling or fitting spigot.
3. Double-lipped, EPDM O-ring seal, mechanically fastened to factory-fabricated couplings and fitting spigots.

2.9 HANGERS AND SUPPORTS

A. Hanger Rods for Noncorrosive Environments: Galvanized-steel rods and nuts.

B. Hanger Rods for Corrosive Environments: Electrogalvanized, all-thread rods or galvanized rods with threads painted with zinc-chromate primer after installation.

C. Strap and Rod Sizes: Comply with SMACNA's "HVAC Duct Construction Standards - Metal and Flexible," Table 5-1, "Rectangular Duct Hangers Minimum Size," and Table 5-2, "Minimum Hanger Sizes for Round Duct."

D. Steel Cables for Galvanized-Steel Ducts: Galvanized steel complying with ASTM A603.

E. Steel Cables for Stainless-Steel Ducts: Stainless steel complying with ASTM A492.

F. Steel Cable End Connections: Galvanized-steel assemblies with brackets, swivel, and bolts designed for duct hanger service; with an automatic-locking and clamping device.

G. Duct Attachments: Sheet metal screws, blind rivets, or self-tapping metal screws; compatible with duct materials.

H. Trapeze and Riser Supports:

1. Supports for Galvanized-Steel Ducts: Galvanized-steel shapes and plates.
2. Supports for Stainless-Steel Ducts: Stainless-steel shapes and plates.
3. Supports for Aluminum Ducts: Aluminum or galvanized steel coated with zinc chromate.

2.10 SEISMIC-RESTRAINT DEVICES

A. Manufacturers: Subject to compliance with requirements, provide products by one of the following:

1. CADDY; brand of nVent Electrical plc.

2. Cooper B-line; brand of Eaton, Electrical Sector.
3. Ductmate Industries, Inc; a DMI company.
4. Hilti, Inc.
5. Kinetics Noise Control, Inc.
6. Mason Industries, Inc.
7. Unistrut; Atkore International.

B. General Requirements for Restraint Components: Rated strengths, features, and applications shall be as defined in reports by an evaluation service member of the ICC Evaluation Service.

1. Structural Safety Factor: Allowable strength in tension, shear, and pullout force of components shall be at least four times the maximum seismic forces to which they will be subjected.

C. Channel Support System: Shop- or field-fabricated support assembly made of slotted steel channels rated in tension, compression, and torsion forces and with accessories for attachment to braced component at one end and to building structure at the other end. Include matching components and corrosion-resistant coating.

D. Restraint Cables: ASTM A492, stainless-steel cables with end connections made of galvanized-steel assemblies with brackets, swivel, and bolts designed for restraining cable service; and with an automatic-locking and clamping device or double-cable clips.

E. Hanger Rod Stiffener: Steel tube or steel slotted-support-system sleeve with internally bolted connections to hanger rod.

F. Mechanical Anchor Bolts: Drilled-in and stud-wedge or female-wedge type. Select anchor bolts with strength required for anchor and as tested in accordance with ASTM E488/E488M.

PART 3 - EXECUTION

3.1 DUCT INSTALLATION

A. Drawing plans, schematics, and diagrams indicate general location and arrangement of duct system. Indicated duct locations, configurations, and arrangements were used to size ducts and calculate friction loss for air-handling equipment sizing and for other design considerations. Install duct systems as indicated unless deviations to layout are approved on Shop Drawings and coordination drawings.

B. Install ducts in accordance with SMACNA's "HVAC Duct Construction Standards - Metal and Flexible" unless otherwise indicated.

C. Install ducts in maximum practical lengths with fewest possible joints.

D. Install factory- or shop-fabricated fittings for changes in direction, size, and shape and for branch connections.

E. Unless otherwise indicated, install ducts vertically and horizontally, and parallel and perpendicular to building lines.

F. Install ducts close to walls, overhead construction, columns, and other structural and permanent enclosure elements of building.

G. Install ducts with a clearance of 1 inch, plus allowance for insulation thickness.

H. Route ducts to avoid passing through transformer vaults and electrical equipment rooms and enclosures.

I. Where ducts pass through non-fire-rated interior partitions and exterior walls and are exposed to view, cover the opening between the partition and duct or duct insulation with sheet metal flanges of same metal thickness as the duct. Overlap openings on four sides by at least 1-1/2 inches.

J. Install fire, combination fire/smoke, and smoke dampers where indicated on Drawings and as required by code, and by local authorities having jurisdiction. Comply with requirements in Section 233300 "Air Duct Accessories" for fire and smoke dampers and specific installation requirements of the damper UL listing.

K. Install heating coils, cooling coils, air filters, dampers, and all other duct-mounted accessories in air ducts where indicated on Drawings.

L. Protect duct interiors from moisture, construction debris and dust, and other foreign materials both before and after installation. Comply with SMACNA's "IAQ Guidelines for Occupied Buildings Under Construction," Appendix G, "Duct Cleanliness for New Construction Guidelines."

M. Elbows: Use long-radius elbows wherever they fit.

1. Fabricate 90-degree rectangular mitered elbows to include turning vanes.
2. Fabricate 90-degree round elbows with a minimum of three segments for 12 inches and smaller and a minimum of five segments for 14 inches and larger.

N. Branch Connections: Use lateral or conical branch connections.

3.2 INSTALLATION OF EXPOSED DUCTWORK

A. Protect ducts exposed in finished spaces from being dented, scratched, or damaged.

B. Trim duct sealants flush with metal. Create a smooth and uniform exposed bead. Do not use two-part tape sealing system.

C. Grind welds to provide smooth surface free of burrs, sharp edges, and weld splatter. When welding stainless steel with a No. 3 or 4 finish, grind the welds flush, polish the exposed welds, and treat the welds to remove discoloration caused by welding.

D. Maintain consistency, symmetry, and uniformity in arrangement and fabrication of fittings, hangers and supports, duct accessories, and air outlets.

E. Repair or replace damaged sections and finished work that does not comply with these requirements.

3.3 ADDITIONAL INSTALLATION REQUIREMENTS FOR TYPE 1 COMMERCIAL KITCHEN GREASE HOOD EXHAUST DUCT

A. Install ducts in accordance with NFPA 96, "Ventilation Control and Fire Protection of Commercial Cooking Operation"; SMACNA's "HVAC Duct Construction Standards - Metal and Flexible"; and SMACNA's "Kitchen Ventilation Systems and Food Service Equipment Fabrication and Installation Guidelines" unless otherwise indicated.

B. Install all ducts without dips and traps that may hold grease, and sloped a minimum of 2 percent to drain grease back to the hood.

C. All ducts exposed to view shall be constructed of stainless steel as per "Duct Schedule" Article. All ducts concealed from view shall be stainless steel as per "Duct Schedule" Article.

D. All joints shall be welded and shall be telescoping, bell, or flange joint as per NFPA 96.

E. Install fire-rated access panel assemblies at each change in direction and at maximum intervals of 20 feet in horizontal ducts, and at every floor for vertical ducts, or as indicated on Drawings.

F. Do not penetrate fire-rated assemblies except as allowed by applicable building codes and authorities having jurisdiction.

3.4 ADDITIONAL INSTALLATION REQUIREMENTS FOR EXHAUST DUCTS SERVING COMMERCIAL DISHWASHERS AND OTHER HIGH-HUMIDITY LOCATIONS

A. Install dishwasher exhaust ducts and other exhaust ducts from wet, high-humidity locations without dips and traps that may hold water. Slope ducts a minimum of 2 percent back to dishwasher or toward drain.

B. Provide a drain pocket at each low point and at the base of each riser with a 1-inchtrapped copper drain from each drain pocket to open site floor drain.

C. Minimize number of transverse seams.

D. Do not locate longitudinal seams on bottom of duct.

3.5 ADDITIONAL INSTALLATION REQUIREMENTS FOR LABORATORY EXHAUST AND FUME HOOD EXHAUST DUCTS

A. Install ducts in accordance with NFPA 45, "Fire Protection for Laboratories Using Chemicals."

B. Install exhaust ducts without dips and traps that may hold water. Slope ducts a minimum of 2 percent back to hood or inlet. Where indicated on Drawings, install trapped drain piping.

C. Connect duct to fan, fume hood, and other equipment indicated on Drawings.

3.6 DUCTWORK EXPOSED TO WEATHER

A. All external joints are to be welded. Seal all openings to provide weatherproof construction.

B. Construct ductwork to resist external loads of wind, snow, ice, and other effects of weather. Provide necessary supporting structures.

C. Single Wall:

1. Ductwork shall be Type 316 stainless steel.
2. Where ducts have external insulation, provide weatherproof aluminum jacket. See Section 230713 "Duct Insulation."

D. Double Wall:

1. Ductwork shall comply with requirements in "Double-Wall Rectangular Ducts and Fittings" or "Double-Wall RoundDucts and Fittings" Article.
2. Ductwork outer wall shall be Type 316 stainless steel indicated by manufacturer to be suitable for outdoor installation.
3. Provide interstitial insulation.

3.7 DUCT SEALING

A. Seal ducts at a minimum to the following seal classes in accordance with SMACNA's "HVAC Duct Construction Standards - Metal and Flexible":

1. Comply with SMACNA's "HVAC Duct Construction Standards - Metal and Flexible."
2. Outdoor, Supply-Air Ducts: Seal Class A.
3. Outdoor, Exhaust Ducts: Seal Class C.
4. Outdoor, Return-Air Ducts: Seal Class C.
5. Unconditioned Space, Supply-Air Ducts in Pressure Classes 2-Inch wg and Lower: Seal Class B.
6. Unconditioned Space, Supply-Air Ducts in Pressure Classes Higher Than 2-Inch wg: Seal Class A.
7. Unconditioned Space, Exhaust Ducts: Seal Class C.
8. Unconditioned Space, Return-Air Ducts: Seal Class B.
9. Conditioned Space, Supply-Air Ducts in Pressure Classes 2-Inch wg and Lower: Seal Class C.
10. Conditioned Space, Supply-Air Ducts in Pressure Classes Higher Than 2-Inch wg: Seal Class B.
11. Conditioned Space, Exhaust Ducts: Seal Class B.
12. Conditioned Space, Return-Air Ducts: Seal Class C.

3.8 HANGER AND SUPPORT INSTALLATION

A. Comply with SMACNA's "HVAC Duct Construction Standards - Metal and Flexible," Chapter 5, "Hangers and Supports."

B. Building Attachments: Concrete inserts, or structural-steel fasteners appropriate for construction materials to which hangers are being attached.

1. Where practical, install concrete inserts before placing concrete.
2. Do not use powder-actuated concrete fasteners.
3. Do not use powder-actuated concrete fasteners for seismic restraints.

C. Hanger Spacing: Comply with SMACNA's "HVAC Duct Construction Standards - Metal and Flexible," Table 5-1, "Rectangular Duct Hangers Minimum Size," and Table 5-2, "Minimum Hanger Sizes for Round Duct," for maximum hanger spacing; install hangers and supports within 24 inches of each elbow and within 48 inches of each branch intersection.

D. Hangers Exposed to View: Threaded rod and angle or channel supports.

E. Support vertical ducts with steel angles or channel secured to the sides of the duct with welds, bolts, sheet metal screws, or blind rivets; support at each floor and at a maximum intervals of 16 feet.

F. Install upper attachments to structures. Select and size upper attachments with pull-out, tension, and shear capacities appropriate for supported loads and building materials where used.

3.9 SEISMIC-RESTRAINT-DEVICE INSTALLATION

A. Install ducts with hangers and braces designed to support the duct and to restrain against seismic forces required by applicable building codes. Comply with ASCE/SEI 7.

1. Space lateral supports a maximum of 40 feet o.c., and longitudinal supports a maximum of 80 feet o.c.
2. Brace a change of direction longer than 12 feet.

B. Select seismic-restraint devices with capacities adequate to carry present and future static and seismic loads.

C. Install cables so they do not bend across edges of adjacent equipment or building structure.

D. Install cable restraints on ducts that are suspended with vibration isolators.

E. Install seismic-restraint devices using methods approved by an evaluation service member of the ICC Evaluation Service.

F. Attachment to Structure: If specific attachment is not indicated, anchor bracing and restraints to structure, to flanges of beams, to upper truss chords of bar joists, or to concrete members.

G. Drilling for and Setting Anchors:

1. Identify position of reinforcing steel and other embedded items prior to drilling holes for anchors. Do not damage existing reinforcement or embedded items during drilling. Notify Architect if reinforcing steel or other embedded items are encountered during drilling. Locate and avoid prestressed tendons, electrical and telecommunications conduit, and gas lines.
2. Do not drill holes in concrete or masonry until concrete, mortar, or grout has achieved full design strength.
3. Wedge Anchors: Protect threads from damage during anchor installation. Heavy-duty sleeve anchors shall be installed with sleeve fully engaged in the structural element to which anchor is to be fastened.
4. Set anchors to manufacturer's recommended torque, using a torque wrench.
5. Install zinc-coated steel anchors for interior applications and stainless-steel anchors for applications exposed to weather.

3.10 CONNECTIONS

A. Make connections to equipment with flexible connectors complying with Section 233300 "Air Duct Accessories."

B. Comply with SMACNA's "HVAC Duct Construction Standards - Metal and Flexible" for branch, outlet and inlet, and terminal unit connections.

3.11 PAINTING

A. Paint interior of metal ducts that are visible through registers and grilles and that do not have duct liner. Apply one coat of flat, black, latex paint over a compatible galvanized-steel primer. Paint materials and application requirements are specified in Section 099113 "Exterior Painting" and Section 099123 "Interior Painting."

3.12 FIELD QUALITY CONTROL

A. Perform tests and inspections.

B. Leakage Tests:

1. Comply with SMACNA's "HVAC Air Duct Leakage Test Manual." Submit a test report for each test.
2. Test the following systems:

    a. Supply Ducts with a Pressure Class of 2- Inch wg or Higher: Test representative duct sections totaling no less than 25 percent of total installed duct area for each designated pressure class.
    b. Return Ducts with a Pressure Class of 2- Inch wg or Higher: Test representative duct sections totaling no less than 25 percent of total installed duct area for each designated pressure class.
    c. Exhaust Ducts with a Pressure Class of 2- Inch wg or Higher: Test representative duct sections totaling no less than 25 percent of total installed duct area for each designated pressure class.
    d. Outdoor-Air Ducts with a Pressure Class of 2- Inch wg or Higher: Test representative duct sections totaling no less than 25 percent of total installed duct area for each designated pressure class.

3. Disassemble, reassemble, and seal segments of systems to accommodate leakage testing and for compliance with test requirements.
4. Testing of each duct section is to be performed with access doors, coils, filters, dampers, and other duct-mounted devices in place as designed. No devices are to be removed or blanked off so as to reduce or prevent additional leakage.
5. Test for leaks before applying external insulation.
6. Conduct tests at static pressures equal to maximum design pressure of system or section being tested. If static-pressure classes are not indicated, test system at maximum system design pressure. Do not pressurize systems above maximum design operating pressure.
7. Give 10 days' advance notice for testing.

C. Duct System Cleanliness Tests:

1. Visually inspect duct system to ensure that no visible contaminants are present.
2. Test sections of metal duct system, chosen randomly by Owner, for cleanliness in accordance with "Description of Method 3 - NADCA Vacuum Test" in NADCA ACR, "Assessment, Cleaning and Restoration of HVAC Systems."

    a. Acceptable Cleanliness Level: Net weight of debris collected on the filter media shall not exceed 0.75 mg/100 sq. cm.

D. Duct system will be considered defective if it does not pass tests and inspections.

E. Prepare test and inspection reports.

3.13 DUCT CLEANING

A. Clean new duct system(s) before testing, adjusting, and balancing.

B. For cleaning of existing ductwork, see Section 230130.52 "Existing HVAC Air Distribution System Cleaning."

C. Use duct cleaning methodology as indicated in NADCA ACR.

D. Use service openings for entry and inspection.

1. Provide openings with access panels appropriate for duct static-pressure and leakage class at dampers, coils, and any other locations where required for inspection and cleaning access. Provide insulated panels for insulated or lined duct. Patch insulation and liner as recommended by duct liner manufacturer. Comply with Section 233300 "Air Duct Accessories" for access panels and doors.
2. Disconnect and reconnect flexible ducts as needed for cleaning and inspection.
3. Remove and reinstall ceiling to gain access during the cleaning process.

E. Particulate Collection and Odor Control:

1. When venting vacuuming system inside the building, use HEPA filtration with 99.97 percent collection efficiency for 0.3-micron-size (or larger) particles.
2. When venting vacuuming system to outdoors, use filter to collect debris removed from HVAC system, and locate exhaust downwind and away from air intakes and other points of entry into building.

F. Clean the following components by removing surface contaminants and deposits:

1. Air outlets and inlets (registers, grilles, and diffusers).
2. Supply, return, and exhaust fans including fan housings, plenums (except ceiling supply and return plenums), scrolls, blades or vanes, shafts, baffles, dampers, and drive assemblies.
3. Air-handling unit internal surfaces and components including mixing box, coil section, air wash systems, spray eliminators, condensate drain pans, humidifiers and dehumidifiers, filters and filter sections, and condensate collectors and drains.
4. Coils and related components.
5. Return-air ducts, dampers, actuators, and turning vanes except in ceiling plenums and mechanical equipment rooms.
6. Supply-air ducts, dampers, actuators, and turning vanes.
7. Dedicated exhaust and ventilation components and makeup air systems.

G. Mechanical Cleaning Methodology:

1. Clean metal duct systems using mechanical cleaning methods that extract contaminants from within duct systems and remove contaminants from building.
2. Use vacuum-collection devices that are operated continuously during cleaning. Connect vacuum device to downstream end of duct sections so areas being cleaned are under negative pressure.
3. Use mechanical agitation to dislodge debris adhered to interior duct surfaces without damaging integrity of metal ducts, duct liner, or duct accessories.
4. Clean fibrous-glass duct liner with HEPA vacuuming equipment; do not permit duct liner to get wet. Replace fibrous-glass duct liner that is damaged, deteriorated, or delaminated or that has friable material, mold, or fungus growth.
5. Clean coils and coil drain pans in accordance with NADCA ACR. Keep drain pan operational. Rinse coils with clean water to remove latent residues and cleaning materials; comb and straighten fins.
6. Provide drainage and cleanup for wash-down procedures.
7. Antimicrobial Agents and Coatings: Apply EPA-registered antimicrobial agents if fungus is present. Apply antimicrobial agents in accordance with manufacturer's written instructions after removal of surface deposits and debris.

3.14 STARTUP

A. Air Balance: Comply with requirements in Section 230593 "Testing, Adjusting, and Balancing for HVAC."

3.15 DUCT SCHEDULE

A. Fabricate ducts with galvanized sheet steel except as otherwise indicated and as follows:

1. Fabricate all ducts to achieve SMACNA pressure class, seal class, and leakage class as indicated below.
2. Underground Ducts: Concrete-encased, PVC-coated, galvanized sheet steel with thicker coating on duct exterior.

B. Supply Ducts:

1. Ducts Connected to Fan Coil Units, Furnaces, Heat Pumps, and Terminal Units:

a. Pressure Class: Positive 1-inch wg.
b. Minimum SMACNA Seal Class: C.
c. SMACNA Leakage Class for Rectangular: 16.
d. SMACNA Leakage Class for Round and Flat Oval: 16.

2. Ducts Connected to Constant-Volume Air-Handling Units:

a. Pressure Class: Positive 3-inch wg.
b. Minimum SMACNA Seal Class: B.
c. SMACNA Leakage Class for Rectangular: 8.
d. SMACNA Leakage Class for Round and Flat Oval: 8.

3. Ducts Connected to Variable-Air-Volume Air-Handling Units:

a. Pressure Class: Positive 4-inch wg.
b. Minimum SMACNA Seal Class: A.
c. SMACNA Leakage Class for Rectangular: 4.
d. SMACNA Leakage Class for Round and Flat Oval: 4.

4. Ducts Connected to Equipment Not Listed Above:

a. Pressure Class: Positive 2-inch wg.
b. Minimum SMACNA Seal Class: C.
c. SMACNA Leakage Class for Rectangular: 16.
d. SMACNA Leakage Class for Round and Flat Oval: 16.

C. Return Ducts:

1. Ducts Connected to Fan Coil Units, Furnaces, Heat Pumps, and Terminal Units:

a. Pressure Class: Positive or negative 1-inch wg.
b. Minimum SMACNA Seal Class: C.
c. SMACNA Leakage Class for Rectangular: 16.
d. SMACNA Leakage Class for Round and Flat Oval: 16.

2. Ducts Connected to Air-Handling Units:

a. Pressure Class: Positive or negative 3-inch wg.
b. Minimum SMACNA Seal Class: B.
c. SMACNA Leakage Class for Rectangular: 8.
d. SMACNA Leakage Class for Round and Flat Oval: 8.

3. Ducts Connected to Equipment Not Listed above:

a. Pressure Class: Positive or negative 2-inch wg.
b. Minimum SMACNA Seal Class: C.
c. SMACNA Leakage Class for Rectangular: 16.
d. SMACNA Leakage Class for Round and Flat Oval: 16.

D. Exhaust Ducts:

1. Ducts Connected to Fans Exhausting (ASHRAE 62.1, Class 1 and 2) Air:

a. Pressure Class: Negative 2-inch wg.
b. Minimum SMACNA Seal Class: C if negative pressure, and A if positive pressure.
c. SMACNA Leakage Class for Rectangular: 8.
d. SMACNA Leakage Class for Round and Flat Oval: 8.

2. Ducts Connected to Air-Handling Units:

a. Pressure Class: Positive or negative 3-inch wg.
b. Minimum SMACNA Seal Class: B if negative pressure, and A if positive pressure.
c. SMACNA Leakage Class for Rectangular: 8.
d. SMACNA Leakage Class for Round and Flat Oval: 8.

3. Ducts Connected to Commercial Kitchen Hoods: Comply with NFPA 96.

a. Exposed to View: Type 304, stainless-steel sheet, No. 4 finish.
b. Concealed: Type 304, stainless-steel sheet, No. 2D finish.
c. Welded seams and joints.
d. Pressure Class: Positive or negative 3-inch wg.
e. Airtight/watertight.

4. Ducts Connected to Dishwashers, Dishwasher Hoods, and Other High-Humidity Locations:

a. Type 304, stainless-steel sheet.
b. Exposed to View: No. 4 finish.
c. Concealed: No. 2D finish.
d. Welded longitudinal seams; welded or flanged transverse joints with watertight EPDM gaskets.
e. Pressure Class: Positive or negative 2-inch wg.
f. Airtight/watertight.

5. Ducts Connected to Fans Exhausting Fume Hood, Laboratory, and Process (ASHRAE 62.1, Class 3 and Class 4) Air:

a. Type 316, stainless-steel sheet.

1) Exposed to View: No. 4 finish.
2) Concealed: No. 2D finish.

b. PVC-coated, galvanized sheet steel with thicker coating on duct interior.

c. Pressure Class: Positive or negative 4- inch wg.
d. Welded seams and joints.
e. Airtight/watertight.

6. Ducts Connected to Equipment Not Listed above:

a. Pressure Class: Positive or negative 3-inch wg.
b. Minimum SMACNA Seal Class: B if negative pressure; A if positive pressure.
c. SMACNA Leakage Class for Rectangular: 4.
d. SMACNA Leakage Class for Round and Flat Oval: 4.

E. Outdoor-Air (Not Filtered, Heated, or Cooled) Ducts:

1. Ducts Connected to Fan Coil Units, Furnaces, Heat Pumps, and Terminal Units:

a. Pressure Class: Positive or negative 1-inch wg.
b. Minimum SMACNA Seal Class: B.
c. SMACNA Leakage Class for Rectangular: 8.
d. SMACNA Leakage Class for Round and Flat Oval: 8.

2. Ducts Connected to Air-Handling Units:

a. Pressure Class: Positive or negative 3-inch wg.
b. Minimum SMACNA Seal Class: B.
c. SMACNA Leakage Class for Rectangular: 8.
d. SMACNA Leakage Class for Round and Flat Oval: 8.

3. Ducts Connected to Equipment Not Listed Above:

a. Pressure Class: Positive or negative 2-inch wg.
b. Minimum SMACNA Seal Class: B.
c. SMACNA Leakage Class for Rectangular: 8.
d. SMACNA Leakage Class for Round and Flat Oval: 8.

F. Intermediate Reinforcement:

1. Galvanized-Steel Ducts: Galvanized steel.
2. PVC-Coated Ducts:

a. Exposed to Airstream: Match duct material.
b. Not Exposed to Airstream: Match duct material.

3. Stainless-Steel Ducts:

a. Exposed to Airstream: Match duct material.
b. Not Exposed to Airstream: Match duct material.

4. Aluminum Ducts: Aluminum.

G. Liner:

1. Supply-Air Ducts: Fibrous glass, Type I, 1 inch(es thick.
2. Return-Air Ducts: Fibrous glass, Type I, 1 inch(es thick.
3. Exhaust-Air Ducts: Fibrous glass, Type I, 1 inch(es thick.
4. Supply Fan Plenums: Fibrous glass, Type II, 2 inch(es thick.

5. Return- and Exhaust-Fan Plenums: Fibrous glass, Type II, 2 inches thick.
6. Transfer Ducts: Fibrous glass, Type I, 1 inch(es thick.

H. Double-Wall Duct Interstitial Insulation:

1. Supply-Air Ducts: 2 inch(es thick.
2. Return-Air Ducts: 2 inch(es thick.
3. Exhaust-Air Ducts: 2 inch(es thick.

I. Elbow Configuration:

1. Rectangular Duct: Comply with SMACNA's "HVAC Duct Construction Standards - Metal and Flexible," Figure 4-2, "Rectangular Elbows."

   a. Radius Type RE 1 with minimum 1.5 radius-to-diameter ratio.
   b. Radius Type RE 3 with minimum 1.0 radius-to-diameter ratio and two vanes.
   c. Mitered Type RE 2 with vanes complying with SMACNA's "HVAC Duct Construction Standards - Metal and Flexible," Figure 4-3, "Vanes and Vane Runners," and Figure 4-4, "Vane Support in Elbows."

2. Round Duct: Comply with SMACNA's "HVAC Duct Construction Standards - Metal and Flexible," Figure 3-4, "Round Duct Elbows."

   a. Minimum Radius-to-Diameter Ratio and Elbow Segments: Comply with SMACNA's "HVAC Duct Construction Standards - Metal and Flexible," Table 3-1, "Mitered Elbows." Elbows with less than 90-degree change of direction have proportionately fewer segments.

      1) Velocity 1000 fpm or Lower: 0.5 radius-to-diameter ratio and three segments for 90-degree elbow.
      2) Velocity 1000 to 1500 fpm: 1.0 radius-to-diameter ratio and four segments for 90-degree elbow.
      3) Velocity 1500 fpm or Higher: 1.5 radius-to-diameter ratio and five segments for 90-degree elbow.

   b. Round Elbows, 12 Inches and Smaller in Diameter: Stamped or pleated.
   c. Round Elbows, 14 Inches and Larger in Diameter: Standing seam or Welded.

J. Branch Configuration:

1. Rectangular Duct: Comply with SMACNA's "HVAC Duct Construction Standards - Metal and Flexible," Figure 4-6, "Branch Connection."

   a. Rectangular Main to Rectangular Branch: 45-degree entry.
   b. Rectangular Main to Round Branch: Conical tap.

2. Round and Flat Oval: Comply with SMACNA's "HVAC Duct Construction Standards - Metal and Flexible," Figure 3-5, "90 Degree Tees and Laterals," and Figure 3-6, "Conical Tees." Saddle taps are permitted in existing duct.

   a. Velocity 1000 fpm or Lower: 90-degree tap.
   b. Velocity 1000 to 1500 fpm: Conical tap.
   c. Velocity 1500 fpm or Higher: 45-degree lateral.

END OF SECTION 23 31 13

SECTION 23 33 00 - AIR DUCT ACCESSORIES

PART 1 - GENERAL

1.1 RELATED DOCUMENTS

A. Drawings and general provisions of the Contract, including General and Supplementary Conditions and Division 01 Specification Sections, apply to this Section.

1.2 SUMMARY

A. Section Includes:

1. Backdraft and pressure relief dampers.
2. Barometric relief dampers.
3. Manual volume dampers.
4. Control dampers.
5. Fire dampers.
6. Ceiling radiation dampers.
7. Smoke dampers.
8. Combination fire and smoke dampers.
9. Corridor dampers.
10. Flange connectors.
11. Duct silencers.
12. Turning vanes.
13. Remote damper operators.
14. Duct-mounted access doors.
15. Duct access panel assemblies.
16. Flexible connectors.
17. Duct security bars.
18. Duct accessory hardware.

B. Related Requirements:

1. Section 233346 "Flexible Ducts" for insulated and non-insulated flexible ducts.
2. Section 233723 "HVAC Gravity Ventilators" for roof-mounted ventilator caps.
3. Section 284621.11 "Addressable Fire-Alarm Systems" for duct-mounted fire and smoke detectors.

1.3 ACTION SUBMITTALS

A. Product Data: For each type of product.

1. For duct silencers, include pressure drop, dynamic insertion loss, and self-generated noise data. Include breakout noise calculations for high-transmission-loss casings.

B. Sustainable Design Submittals:

1. Product data showing compliance with ASHRAE 62.1.

C. Shop Drawings: For duct accessories. Include plans, elevations, sections, details, and attachments to other work.

1. Detail duct accessories' fabrication and installation in ducts and other construction. Include dimensions, weights, loads, and required clearances; and method of field assembly into duct systems and other construction. Include the following:

a. Special fittings.
b. Manual volume damper installations.
c. Control-damper installations.
d. Fire-damper, smoke-damper, combination fire- and smoke-damper, ceiling, and corridor-damper installations, including sleeves; and duct-mounted access doors and remote damper operators.
e. Duct security bars.
f. Include diagrams for power, signal, and control wiring.

1.4 INFORMATIONAL SUBMITTALS

A. Coordination Drawings: Reflected ceiling plans, or BIM model, drawn to scale, on which ceiling-mounted access panels and access doors required for access to duct accessories are shown and coordinated with each other, using input from installers of the items involved.

B. Source quality-control reports.

1.5 CLOSEOUT SUBMITTALS

A. Operation and Maintenance Data: For air duct accessories to include in operation and maintenance manuals.

1.6 MAINTENANCE MATERIAL SUBMITTALS

A. Furnish extra materials that match products installed and that are packaged with protective covering for storage and identified with labels describing contents.

1. Fusible Links: Furnish quantity equal to 10 percent of amount installed.

PART 2 - PRODUCTS

2.1 PERFORMANCE REQUIREMENTS

A. Comply with NFPA 90A and NFPA 90B.

B. Comply with SMACNA's "HVAC Duct Construction Standards - Metal and Flexible" for acceptable materials, material thicknesses, and duct construction methods unless otherwise indicated. Sheet metal materials shall be free of pitting, seam marks, roller marks, stains, discolorations, and other imperfections.

2.2 BACKDRAFT AND PRESSURE RELIEF DAMPERS

A. Manufacturers: Subject to compliance with requirements, provide products by one of the following:

1. American Warming and Ventilating; a Mestek Architectural Group company.
2. Greenheck Fan Corporation.
3. Nailor Industries Inc.
4. Pottorff.
5. Ruskin Company.
6. United Enertech.
7. Vent Products Co., Inc.

B. Description: Gravity balanced.

C. Performance:

1. Maximum Air Velocity: 1000 fpm.
2. Maximum System Pressure: 1 inch wg.
3. AMCA Certification: Test and rate in accordance with AMCA 511.
4. Leakage:

   a. Class IA: Leakage shall not exceed 3 cfm/sq. ft. against 1-inch wg differential static pressure.

D. Construction:

1. Frame:

   a. Hat shaped.
   b. 16-gauge-thick, galvanized sheet steel, with welded or mechanically attached corners and mounting flange.

2. Blades:

   a. Multiple single-piece blades.
   b. End pivoted, maximum 6-inch width, 16-gauge-thick, galvanized sheet steel with sealed edges.

3. Blade Action: Parallel.

E. Blade Seals: Neoprene, mechanically locked.

F. Blade Axles:

1. Material: Nonferrous metal.
2. Diameter: 0.20 inch.

G. Tie Bars and Brackets: Galvanized steel.

H. Return Spring: Adjustable tension.

I. Bearings: Brass sleeve or synthetic pivot bushings.

J. Accessories:

1. Adjustment device to permit setting for varying differential static pressure.
2. Counterweights and spring-assist kits for vertical airflow installations.
3. Chain pulls.
4. 90-degree stops.

2.3 BAROMETRIC RELIEF DAMPERS

A. Manufacturers: Subject to compliance with requirements, provide products by one of the following:

1. American Warming and Ventilating; a Mestek Architectural Group company.
2. Greenheck Fan Corporation.
3. Nailor Industries Inc.
4. Pottorff.
5. Ruskin Company.
6. United Enertech.
7. Vent Products Co., Inc.

B. General Requirements:

1. Suitable for horizontal or vertical mounting.
2. Maximum Air Velocity: 1000 fpm.
3. Maximum System Pressure: 2 inches wg.

C. Construction:

1. Frame: Hat shaped, 16-gauge-thick, galvanized sheet steel, with welded corners or mechanically attached and mounting flange.
2. Blades:

    a. Multiple, 16-gauge-thick, galvanized sheet steel.
    b. Maximum Width: 6 inches.
    c. Action: Parallel.
    d. Balance: Gravity.
    e. End pivoted.

3. Blade Seals: Neoprene.
4. Blade Axles: Galvanized steel.
5. Tie Bars and Brackets:

    a. Material: Galvanized steel.
    b. Rattle free with 90-degree stop.

6. Bearings: Synthetic.

D. Pressure Adjustment: Return spring or counter weight with adjustable tension.

E. Accessories:

1. Flange on intake.
2. Adjustment device to permit setting for varying differential static pressures.

2.4 MANUAL VOLUME DAMPERS

A. Standard, Steel, Manual Volume Dampers:

1. Manufacturers: Subject to compliance with requirements, provide products by one of the following:

   a. Air Balance; a division of MESTEK, Inc.
   b. American Warming and Ventilating; a Mestek Architectural Group company.
   c. Arrow United Industries.
   d. Greenheck Fan Corporation.
   e. Nailor Industries Inc.
   f. Pottorff.
   g. Ruskin Company.
   h. United Enertech.
   i. Vent Products Co., Inc.

2. Performance:

   a. Leakage Rating Class III: Leakage not exceeding 40 cfm/sq. ft. against 1-inch wg differential static pressure.

3. Construction:

   a. Linkage out of airstream.
   b. Suitable for horizontal or vertical airflow applications.

4. Frames:

   a. Hat-shaped, 16-gauge-thick, galvanized sheet steel.
   b. Mitered and welded corners.
   c. Flanges for attaching to walls and flangeless frames for installing in ducts.

5. Blades:

   a. Multiple or single blade.
   b. Parallel- or opposed-blade design.
   c. Stiffen damper blades for stability.
   d. Galvanized steel; 16 gauge thick.

6. Blade Axles: Galvanized steel.
7. Bearings:

   a. Oil-impregnated bronze.
   b. Dampers mounted with vertical blades to have thrust bearing at each end of every blade.

8. Tie Bars and Brackets: Galvanized steel.
9. Locking device to hold damper blades in a fixed position without vibration.

B. Standard, Aluminum, Manual Volume Dampers:

1. Manufacturers: Subject to compliance with requirements, provide products by one of the following:

a. American Warming and Ventilating; a Mestek Architectural Group company.
b. Arrow United Industries.
c. McGill AirFlow LLC.
d. Nailor Industries Inc.
e. Pottorff.
f. Ruskin Company.
g. United Enertech.
h. Vent Products Co., Inc.

2. Performance:

a. Leakage Rating Class III: Leakage not exceeding 40 cfm/sq. ft. against 1-inch wg differential static pressure.

3. Construction:

a. Linkage out of airstream.
b. Suitable for horizontal or vertical airflow applications.

4. Frames:

a. Hat-shaped, 0.10-inch-thick, aluminum sheet channels.
b. Flanges for attaching to walls and flangeless frames for installing in ducts.

5. Blades:

a. Multiple or single blade.
b. Parallel- or opposed-blade design.
c. Stiffen damper blades for stability.
d. Roll-Formed Aluminum Blades: 0.10-inch-thick aluminum sheet.

6. Blade Axles: Galvanized steel.
7. Bearings:

a. Oil-impregnated bronze.
b. Dampers mounted with vertical blades to have thrust bearing at each end of every blade.

8. Tie Bars and Brackets: Aluminum.
9. Locking device to hold damper blades in a fixed position without vibration.

C. Low-Leakage, Steel, Manual Volume Dampers:

1. Manufacturers: Subject to compliance with requirements, provide products by one of the following:

a. Air Balance; a division of MESTEK, Inc.
b. American Warming and Ventilating; a Mestek Architectural Group company.
c. Arrow United Industries.
d. Greenheck Fan Corporation.
e. McGill AirFlow LLC.
f. Nailor Industries Inc.
g. Pottorff.
h. Ruskin Company.
i. United Enertech.

j. Vent Products Co., Inc.

2. Performance:

a. AMCA Certification: Test and rate in accordance with AMCA 511.
b. Leakage:

1) Class IA: Leakage shall not exceed 3 cfm/sq. ft. against 1-inch wg differential static pressure.
2) Class I: Leakage shall not exceed 4 cfm/sq. ft. against 1-inch wg differential static pressure.
3) Class II: Leakage shall not exceed 10 cfm/sq. ft. against 1-inch wg differential static pressure.

3. Construction:

a. Linkage: Out of airstream.
b. Suitable for horizontal or vertical airflow applications.

4. Frames:

a. Hat, U, or angle shaped.
b. Thickness: 16-gauge galvanized sheet steel.
c. Mitered and welded corners.
d. Flanges for attaching to walls and flangeless frames for installing in ducts.

5. Blades:

a. Multiple or single blade.
b. Parallel- or opposed-blade design.
c. Stiffen damper blades for stability.
d. Galvanized, roll-formed steel; 16 gauge thick.

6. Blade Edging Seals:

a. Closed-cell neoprene.

7. Blade Jamb Seals: Neoprene.
8. Blade Axles: Galvanized steel.
9. Bearings:

a. Oil-impregnated bronze.
b. Dampers mounted with vertical blades to have thrust bearing at each end of every blade.

10. Tie Bars and Brackets: Galvanized steel.
11. Locking device to hold damper blades in a fixed position without vibration.

D. Low-Leakage, Aluminum, Manual Volume Dampers:

1. Manufacturers: Subject to compliance with requirements, provide products by one of the following:

a. Air Balance; a division of MESTEK, Inc.
b. American Warming and Ventilating; a Mestek Architectural Group company.

c. Arrow United Industries.
d. McGill AirFlow LLC.
e. Nailor Industries Inc.
f. Pottorff.
g. Ruskin Company.
h. United Enertech.
i. Vent Products Co., Inc.

2. Performance:

a. AMCA Certification: Test and rate in accordance with AMCA 511.
b. Leakage:

1) Class IA: Leakage shall not exceed 3 cfm/sq. ft. against 1-inch wg differential static pressure.
2) Class I: Leakage shall not exceed 4 cfm/sq. ft. against 1-inch wg differential static pressure.
3) Class II: Leakage shall not exceed 10 cfm/sq. ft. against 1-inch wg differential static pressure.

3. Construction:

a. Linkage out of airstream.
b. Suitable for horizontal or vertical airflow applications.

4. Frames:

a. Hat, U, or angle shaped.
b. Thickness: 0.08-inch aluminum sheet channels.
c. Flanges for attaching to walls and flangeless frames for installing in ducts.

5. Blades:

a. Multiple or single blade.
b. Parallel- or opposed-blade design.
c. Roll-Formed Aluminum Blades:0.072-inch thick aluminum sheet.
d. Extruded-Aluminum Blades: 0.050-inch-thick extruded aluminum.

6. Blade Edging Seals:

a. Closed-cell neoprene.
b. Inflatable seal blade edging or replaceable rubber seals.

7. Blade Jamb Seals: Neoprene.
8. Blade Axles: Galvanized steel.
9. Bearings:

a. Oil-impregnated bronze.
b. Dampers mounted with vertical blades to have thrust bearings at each end of every blade.

10. Tie Bars and Brackets: Galvanized steel.
11. Locking device to hold damper blades in a fixed position without vibration.

E. Jackshaft:

1. Size: 0.5-inch diameter.
2. Material: Galvanized-steel pipe rotating within pipe-bearing assembly mounted on supports at each mullion and at each end of multiple-damper assemblies.
3. Length and Number of Mountings: As required to connect linkage of each damper in multiple-damper assembly.

F. Damper Hardware:

1. Zinc-plated, die-cast core with dial and handle, made of 3/32-inch-thick zinc-plated steel, and a 3/4-inch hexagon locking nut.
2. Include center hole to suit damper operating-rod size.
3. Include elevated platform for insulated duct mounting.

2.5 CONTROL DAMPERS

A. Manufacturers: Subject to compliance with requirements, provide products by one of the following:

1. American Warming and Ventilating; a Mestek Architectural Group company.
2. Arrow United Industries.
3. Carnes Company.
4. Greenheck Fan Corporation.
5. McGill AirFlow LLC.
6. Nailor Industries Inc.
7. Pottorff.
8. Ruskin Company.
9. United Enertech.
10. Vent Products Co., Inc.
11. Young Regulator Company.

B. General Requirements:

1. Unless otherwise indicated, use parallel-blade configuration for two-position control, equipment isolation service, and when mixing two airstreams. For other applications, use opposed-blade configuration.
2. Factory or field assemble multiple damper sections to provide a single damper assembly of size required by the application.

C. Performance:

1. AMCA Certification: Test and rate in accordance with AMCA 511.
2. Leakage:

   a. Class I: Leakage shall not exceed 4 cfm/sq. ft. against 1-inch wg differential static pressure.

3. Pressure Drop: 0.05 inch wg at 1500 fpm across a 24-by-24-inch damper when tested in accordance with AMCA 500-D, Figure 5.3.
4. Velocity: Up to 3000 fpm.
5. Temperature: Minus 25 to plus 180 deg F.
6. Pressure Rating: Damper close-off pressure equal to fan shutoff pressure with a maximum blade deflection of 1/200 of blade length.

D. Construction:

1. Linkage out of airstream.
2. Suitable for horizontal or vertical airflow applications.
3. Frames:

    a. Hat, U, or angle shaped.
    b. 16-gauge-thick, galvanized sheet steel.
    c. Mitered and welded corners.
    d. Flanges for attaching to walls and flangeless frames for installing in ducts.

4. Blades:

    a. Multiple blade with maximum blade width of 6 inches.
    b. Opposed-blade design.
    c. Galvanized steel.
    d. 16-gauge-thick single skin or 14-gauge-thick air foil dual skin.

5. Blade Edging Seals:

    a. Replaceable Closed-cell neoprene.
    b. Inflatable seal blade edging, or replaceable rubber seals.

6. Blade Jamb Seal: Flexible stainless steel, compression type.
7. Blade Axles: 1/2-inch diameter; galvanized steel.
8. Blade-Linkage Hardware: Zinc-plated steel and brass; ends sealed against blade bearings. Linkage mounted out of air stream.
9. Bearings:

    a. Oil-impregnated bronze.
    b. Dampers mounted with vertical blades to have thrust bearings at each end of every blade.

E. Damper Actuator - Electric:

1. Electric - 24 V ac.
2. UL 873, plenum rated.
3. Two position or Fully modulating with fail-safe spring return.

    a. Sufficient motor torque and spring torque to drive damper fully open and fully closed with adequate force to achieve required damper seal.
    b. Minimum 90-degree drive rotation.

4. Clockwise or counterclockwise drive rotation as required for application.
5. Environmental Operating Range:

    a. Temperature: Minus 40 to plus 130 deg F.
    b. Humidity: 5 to 95 percent relative humidity noncondensing.

6. Environmental enclosure: NEMA 2.
7. Actuator to be factory mounted and provided with a single-point wiring connection.

F. Controllers, Electrical Devices, and Wiring:

1. Comply with requirements for electrical devices and connections specified in Section 230923 "Direct Digital Control (DDC) System for HVAC."
2. Electrical Connection: 24 V, 60 Hz.

2.6 FIRE DAMPERS

A. Manufacturers: Subject to compliance with requirements, provide products by one of the following:

1. Air Balance; a division of MESTEK, Inc.
2. Arrow United Industries.
3. Greenheck Fan Corporation.
4. Pottorff.
5. Prefco.
6. Ruskin Company.
7. United Enertech.
8. Vent Products Co., Inc.

B. Type: dynamic; rated and labeled in accordance with UL 555 by an NRTL.

C. Closing rating in ducts up to 4-inch wg static pressure class and minimum 2000 fpm velocity.

D. Fire Rating: 1-1/2 and 3 hours.

E. Frame: Curtain type with blades outside airstream except when located behind grille where blades may be inside airstream; fabricated with roll-formed galvanized steel; with mitered and interlocking corners; gauge in accordance with UL listing.

F. Mounting Sleeve: Factory- or field-installed, galvanized sheet steel; gauge in accordance with UL listing.

G. Mounting Orientation: Vertical or horizontal as indicated.

H. Blades: Roll-formed galvanized sheet steel, interlocking. Material gauge is to be in accordance with UL listing.

I. Horizontal Dampers: Include blade lock and stainless steel closure spring.

J. Heat-Responsive Device:

1. Replaceable, 165 deg F rated, fusible links.

2.7 CEILING RADIATION DAMPERS

A. Manufacturers: Subject to compliance with requirements, provide products by one of the following:

1. Air Balance; a division of MESTEK, Inc.
2. Arrow United Industries.
3. Greenheck Fan Corporation.
4. Nailor Industries Inc.
5. Pottorff.
6. Prefco.
7. Ruskin Company.
8. United Enertech.

B. General Requirements:

1. Labeled according to UL 555C by an NRTL.
2. Comply with construction details for tested floor- and roof-ceiling assemblies as indicated in UL's "Fire Resistance Directory."

C. Frame: Galvanized sheet steel, round or rectangular, style to suit ceiling construction; gauge in accordance with UL listing.

D. Blades: Galvanized sheet steel with refractory insulation; gauge in accordance with UL listing.

E. Heat-Responsive Device: Replaceable, 165 deg F rated, fusible links.

F. Fire Rating: 2 hour(s).

2.8 SMOKE DAMPERS

A. Manufacturers: Subject to compliance with requirements, provide products by one of the following:

1. Air Balance; a division of MESTEK, Inc.
2. Arrow United Industries.
3. Greenheck Fan Corporation.
4. Pottorff.
5. Ruskin Company.
6. United Enertech.

B. General Requirements:

1. Label to indicate conformance to UL 555 and UL 555S by an NRTL.
2. Label to indicate conformance to NFPA 80 and NFPA 90A by an NRTL.
3. Unless otherwise indicated, use parallel-blade configuration.
4. Factory or field assemble multiple damper sections to provide a single damper assembly of size required by the application.
5. Factory install damper actuator by damper manufacturer as integral part of damper assembly. Coordinate actuator location, mounting, and electrical requirements with damper manufacturer.

C. Performance:

1. AMCA Certification: Test and rate in accordance with AMCA Publication 511.
2. Leakage:

   a. Class IA: Leakage shall not exceed 3 cfm/sq. ft. against 1-inch wg differential static pressure.

3. Pressure Drop: 0.05 inch wg at 1500 fpm across a 24-by-24-inch damper when tested in accordance with AMCA 500-D, Figure 5.3.
4. Velocity: Up to 3000 fpm.
5. Temperature: Minus 25 to plus 180 deg F.
6. Pressure Rating: Damper close-off pressure equal to fan shutoff pressure with a maximum blade deflection of 1/200 of blade length.

D. Construction:

1. Suitable for horizontal or vertical airflow applications.

2. Linkage out of airstream.
3. Frame:

    a. Hat shaped.
    b. Galvanized sheet steel, with welded corners and mounting flange.
    c. Gauge in accordance with UL listing.

4. Blades:

    a. Roll-formed, horizontal, airfoil, galvanized sheet steel.
    b. Maximum width and gauge in accordance with UL listing.

5. Blade Edging Seals:

    a. Silicone rubber.

6. Blade Jamb Seal: Flexible stainless steel, compression type.
7. Blade Axles: 1/2-inch diameter; galvanized steel; blade-linkage hardware of zinc-plated steel and brass; ends sealed against blade bearings. Linkage is to be mounted out of airstream.
8. Bearings:

    a. Oil-impregnated bronze.

E. Mounting Sleeve: Factory-installed, galvanized sheet steel; length to suit wall or floor application with factory-furnished silicone caulking; gauge in accordance with UL listing.

F. Damper Actuator - Electric:

1. Electric - 24 V ac.
2. UL 873, plenum rated.
3. Designed to operate in smoke-control systems complying with UL 555S requirements.
4. Two position with fail-safe spring return.

    a. Sufficient motor torque and spring torque to drive damper fully open and fully closed with adequate force to achieve required damper seal.
    b. Maximum 15-second full-stroke closure.
    c. Minimum 90-degree drive rotation.

5. Clockwise or counterclockwise drive rotation as required for application.
6. Environmental Operating Range:

    a. Temperature: Minus 40 to plus 130 deg F.
    b. Humidity: 5 to 95 percent relative humidity noncondensing.

7. Environmental Enclosure: NEMA 2.
8. Actuator to be factory mounted and provided with single-point wiring connection.

G. Controllers, Electrical Devices, and Wiring:

1. Comply with requirements for electrical devices and connections specified in Section 230923 "Direct Digital Control (DDC) System for HVAC."
2. Electrical Connection: 24 V, 60 Hz.

H. Accessories:

1. Auxiliary switches for signaling, fan control or position indication.
2. Test and reset switches, damper mounted.

2.9 COMBINATION FIRE AND SMOKE DAMPERS

A. Manufacturers: Subject to compliance with requirements, provide products by one of the following:

1. Air Balance; a division of MESTEK, Inc.
2. Arrow United Industries.
3. Greenheck Fan Corporation.
4. Pottorff.
5. Ruskin Company.
6. United Enertech.

B. General Requirements:

1. Label to indicate conformance to UL 555 and UL 555S by an NRTL.
2. Label to indicate conformance to NFPA 80 and NFPA 90A by an NRTL.
3. Unless otherwise indicated, use parallel-blade configuration.

C. Closing rating in ducts up to 4-inch wg static pressure class and minimum 2000 fpm velocity.

D. Fire Rating: 1-1/2 and 3 hours.

E. Performance:

1. AMCA Certification: Test and rate in accordance with AMCE Publication 511.
2. Leakage:

   a. Class IA: Leakage shall not exceed 3 cfm/sq. ft. against 1-inch wg differential static pressure.

3. Pressure Drop: 0.05 in. wg at 1500 fpm across a 24-by-24-inch damper when tested in accordance with AMCA 500-D, Figure 5.3.
4. Velocity: Up to 3000 fpm.
5. Temperature: Minus 25 to plus 180 deg F.
6. Pressure Rating: Damper close-off pressure equal to fan shutoff pressure with a maximum blade deflection of 1/200 of blade length.

F. Construction:

1. Suitable or horizontal or vertical airflow applications.
2. Linkage out of airstream.
3. Frame:

   a. Hat shaped.
   b. Galvanized sheet steel, with welded corners and mounting flange.
   c. Gauge is to be in accordance with UL listing.

4. Blades:

   a. Roll-formed, horizontal, airfoil, galvanized sheet steel.
   b. Maximum width and gauge in accordance with UL listing.

5. Blade Edging Seals:

    a. Silicone rubber.

6. Blade Jamb Seal: Flexible stainless steel, compression type.
7. Blade Axles: 1/2-inch-diameter; galvanized steel; blade-linkage hardware of zinc-plated steel and brass; ends sealed against blade bearings. Linkage mounted out of airstream.
8. Bearings:

    a. Oil-impregnated bronze.

G. Mounting Sleeve:

1. Factory installed, galvanized sheet steel.
2. Length to suit wall or floor application with factory-furnished silicone caulking.
3. Gauge in accordance with UL listing.

H. Heat-Responsive Device:

1. Electric resettable device and switch package, factory installed, rated.

I. Master control panel for use in dynamic smoke-management systems.

J. Damper Actuator - Electric:

1. Electric - 24 V ac.
2. UL 873, plenum rated.
3. Designed to operate in smoke-control systems complying with UL 555S requirements.
4. Two position with fail-safe spring return.

    a. Sufficient motor torque and spring torque to drive damper fully open and fully closed with adequate force to achieve required damper seal.
    b. Maximum 15-second full-stroke closure.
    c. Minimum 90-degree drive rotation.

5. Clockwise or counterclockwise drive rotation as required for application.
6. Environmental Operating Range:

    a. Temperature: Minus 40 to plus 130 deg F.
    b. Humidity: 5 to 95 percent relative humidity noncondensing.

7. Environmental Enclosure: NEMA 2.
8. Actuator to be factory mounted and provided with single-point wiring connection.

K. Controllers, Electrical Devices, and Wiring:

1. Comply with requirements for electrical devices and connections specified in Section 230923 "Direct Digital Control (DDC) System for HVAC."
2. Electrical Connection: 24 V, 60 Hz.

L. Accessories:

1. Auxiliary switches for signaling, fan control or position indication.
2. Test and reset switches, damper mounted.
3. Smoke Detector: Integral, factory wired for single-point connection.

2.10 CORRIDOR DAMPERS

A. Manufacturers: Subject to compliance with requirements, provide products by one of the following:

1. Pottorff.
2. Ruskin Company.
3. United Enertech.

B. General Requirements:

1. Label to indicate conformance to UL 555 and UL 555S by an NRTL.
2. Label to indicate conformance to NFPA 90A by an NRTL.

C. Closing rating in ducts up to 4-inch wg static pressure class and minimum 2000 fpm velocity.

D. Fire Rating: 1, 1-1/2, or 2 hours.

E. Performance:

1. AMCA Certification: Test and rate in accordance with AMCA Publication 511.
2. Leakage:

   a. Class 1A: Leakage shall not exceed 3 cfm/sq. ft. against 1-inch wg differential static pressure.

F. Construction:

1. Frame: Hat shaped, galvanized sheet steel, with welded corners and mounting flange; gauge in accordance with UL listing.
2. Blades: Roll-formed, horizontal, interlocking, galvanized sheet steel; gauge in accordance with UL listing.

G. Mounting Sleeve:

1. Factory installed, galvanized sheet steel.
2. Length to suit wall or floor application with factory-furnished silicone caulking.
3. Gauge in accordance with UL listing.

H. Heat-Responsive Device:

1. Electric resettable device and switch package, factory installed, rated.

I. Damper Actuator - Electric:

1. Electric - 24 V ac.
2. UL 873, plenum rated.
3. Designed to operate in smoke-control systems complying with UL 555S requirements.
4. Two position with fail-safe spring return.

   a. Sufficient motor torque and spring torque to drive damper fully open and fully closed with adequate force to achieve required damper seal.
   b. Maximum 15-second full-stroke closure.
   c. Minimum 90-degree drive rotation.

5. Clockwise or counterclockwise drive rotation as required for application.
6. Environmental Operating Range:

    a. Temperature: Minus 40 to plus 130 deg F.
    b. Humidity: 5 to 95 percent relative humidity noncondensing.

7. Environmental enclosure: NEMA 2.
8. Actuator to be factory mounted and provided with single-point wiring connection.

J. Damper Actuator - Pneumatic:

1. Operated by 0 to 20 psig pneumatic signal.
2. Designed to operate in smoke-control systems complying with UL 555S requirements.
3. Two position with fail-safe spring return.

    a. Sufficient power and spring force to drive damper fully open and fully closed with adequate force to achieve required damper seal.
    b. Maximum 15-second full-stroke closure.

4. Actuator to be factory mounted.

K. Controllers, Electrical Devices, and Wiring:

1. Comply with requirements for electrical devices and connections specified in Section 230923 "Direct Digital Control (DDC) System for HVAC."
2. Electrical Connection: 24 V, 60 Hz.

L. Accessories:

1. Auxiliary switches for signaling, fan control, or position indication.
2. Test and reset switches, damper mounted.
3. Smoke Detector: Integral, factory wired for single-point connection.

2.11 FLANGE CONNECTORS

A. Manufacturers: Subject to compliance with requirements, provide products by one of the following:

1. CL WARD & Family Inc.
2. Ductmate Industries, Inc; a DMI company.
3. DynAir; a Carlisle Company.
4. Elgen Manufacturing.
5. Ward Industries; a brand of Hart & Cooley, Inc.

B. Description: Add-on or roll-formed, factory fabricated, slide-on transverse flange connectors, gaskets, and components.

C. Material: Galvanized steel.

D. Gauge and Shape: Match connecting ductwork.

2.12 DUCT SILENCERS

A. Manufacturers: Subject to compliance with requirements, provide products by one of the following:

1. IAC Acoustics; a division of Sound Seal.
2. McGill AirFlow LLC.
3. Price Industries.
4. Ruskin Company.
5. Vibro-Acoustics.

B. General Requirements:

1. Factory fabricated.
2. Fire-Performance Characteristics: Adhesives, sealants, packing materials, and accessory materials shall have flame-spread index not exceeding 25 and smoke-developed index not exceeding 50 when tested in accordance with ASTM E84.
3. Airstream Surfaces: Surfaces in contact with the airstream shall comply with requirements in ASHRAE 62.1.
4. Bearing AMCA's Certified Ratings Seal for prefabricated silencer sound and air performance.

C. Shape:

1. Rectangular straight with splitters or baffles.
2. Round straight with center bodies or pods.
3. Rectangular elbow with splitters or baffles.
4. Round elbow with center bodies or pods.
5. Rectangular transitional with splitters or baffles.

D. Rectangular Silencer Outer Casing: ASTM A653/A653M, G90, galvanized sheet steel, 0.034 inch thick.

E. Round Silencer Outer Casing: ASTM A653/A653M, G90, galvanized sheet steel.

1. Sheet Metal Thickness for Units up to 24 Inches in Diameter: 22 gauge thick.
2. Sheet Metal Thickness for Units 26 through 40 Inches in Diameter: 20 gauge thick.
3. Sheet Metal Thickness for Units 42 through 52 Inches in Diameter: 18 gauge thick.
4. Sheet Metal Thickness for Units 54 through 60 Inches in Diameter: 16 gauge thick.

F. Inner Casing and Baffles: ASTM A653/A653M, G90 galvanized sheet metal, 22 gauge thick, and with 1/8-inch- diameter perforations.

G. Special Construction:

1. Suitable for outdoor use.
2. High transmission loss.

H. Connection Sizes: Match connecting ductwork unless otherwise indicated.

I. Principal Sound-Absorbing Mechanism:

1. Controlled impedance membranes and broadly tuned resonators without absorptive media.
2. Dissipative type with fill material.

a. Fill Material: Inert and vermin-proof fibrous material, packed under not less than 5 percent compression.
b. Erosion Barrier: Polymer bag enclosing fill, heat-sealed before assembly.

3. Lining: None.

J. Fabricate silencers to form rigid units that will not pulsate, vibrate, rattle, or otherwise react to system pressure variations. Do not use mechanical fasteners for unit assemblies.

1. Joints: Continuously welded or flanged connections.
2. Suspended Units: Factory-installed suspension hooks or lugs attached to frame in quantities and spaced to prevent deflection or distortion.
3. Reinforcement: Cross or trapeze angles for rigid suspension.

K. Accessories:

1. Factory-installed end caps to prevent contamination during shipping.
2. Removable splitters.
3. Airflow-measuring devices.

L. Source Quality Control:

1. Test in accordance with ASTM E477.
2. Testing to be witnessed by Owner.
3. Record acoustic ratings, including dynamic insertion loss and generated-noise power levels with an airflow of at least 2000 fpm face velocity.
4. Leak Test: Test units for airtightness at 200 percent of associated fan static pressure or 6-inch wg static pressure, whichever is greater.

2.13 TURNING VANES

A. Manufacturers: Subject to compliance with requirements, provide products by one of the following:

1. Aero-Dyne Sound Control Co.
2. Ductmate Industries, Inc; a DMI company.
3. Duro Dyne Inc.
4. Ward Industries; a brand of Hart & Cooley, Inc.

B. Manufactured Turning Vanes for Metal Ducts: Fabricate curved blades of galvanized sheet steel; support with bars perpendicular to blades set; set into vane runners suitable for duct mounting.

1. Acoustic Turning Vanes: Fabricate airfoil-shaped aluminum extrusions with perforated faces and fibrous-glass fill.

C. Manufactured Turning Vanes for Nonmetal Ducts: Fabricate curved blades of resin-bonded fiberglass with acrylic polymer coating; support with bars perpendicular to blades set; set into vane runners suitable for duct mounting.

D. General Requirements: Comply with SMACNA's "HVAC Duct Construction Standards - Metal and Flexible"; Figure 4-3, "Vanes and Vane Runners," and Figure 4-4, "Vane Support in Elbows."

E. Vane Construction:

1. Single wall for ducts up to 24-inches wide and double wall for larger dimensions.

2.14 REMOTE DAMPER OPERATORS

A. Manufacturers: Subject to compliance with requirements, provide products by one of the following:

1. DynAir; a Carlisle Company.
2. METALAIRE, Inc.
3. United Enertech.
4. Young Regulator Company.

B. Description: Cable system designed for remote manual damper adjustment.

C. Tubing: Brass.

D. Cable: Steel.

E. Wall-Box Mounting: Recessed.

F. Wall-Box Cover-Plate Material: Steel.

2.15 DUCT-MOUNTED ACCESS DOORS

A. Manufacturers: Subject to compliance with requirements, provide products by one of the following:

1. Arrow United Industries.
2. Ductmate Industries, Inc; a DMI company.
3. Duro Dyne Inc.
4. McGill AirFlow LLC.
5. Ruskin Company.
6. United Enertech.
7. Ward Industries; a brand of Hart & Cooley, Inc.

B. Duct-Mounted Access Doors: Fabricate access panels in accordance with SMACNA's "HVAC Duct Construction Standards - Metal and Flexible"; Figure 7-2 (7-2M), "Duct Access Doors and Panels," and Figure 7-3, "Access Doors - Round Duct."

1. Door:

   a. Double wall, rectangular.
   b. Galvanized sheet metal with insulation fill and thickness as indicated for duct pressure class.
   c. 24-gauge-thick galvanized steel or 0.032-inch thick aluminum or 24-gauge-thick stainless steel Insert value door panel.
   d. Vision panel.
   e. Hinges and Latches: 1-by-1-inch butt or piano hinge and cam latches.
   f. Fabricate doors airtight and suitable for duct pressure class.

2. Frame: Galvanized sheet steel, with bend-over tabs and foam gaskets.

   a. 24-gauge-thick galvanized steel or 0.032-inch-thick aluminum frame.

3. Number of Hinges and Locks:

   a. Access Doors Less Than 12 Inches Square: No hinges and two sash locks.
   b. Access Doors up to 18 Inches Square: Two hinges and two sash locks.
   c. Access Doors up to 24 by 48 Inches: Three hinges and two compression latches with outside and inside handles.
   d. Access Doors Larger Than 24 by 48 Inches: Continuous and two compression latches with outside and inside handles.

C. Pressure Relief Access Door:

1. Door and Frame Material: Galvanized sheet steel.

   a. 24-gauge-thick galvanized steel or 0.032?inch-thick aluminum or 24-gauge-thick stainless steel Insert value door panel.

2. Door: Double wall with insulation fill with metal thickness applicable for duct pressure class.
3. Operation: Open outward for positive-pressure ducts and inward for negative-pressure ducts.
4. Factory set at 3.0 to 8.0 inches wg.
5. Doors close when pressures are within set-point range.
6. Hinge: Continuous piano.
7. Latches: Cam.
8. Seal: Neoprene or foam rubber.
9. Insulation Fill: 1-inch- thick, fibrous-glass or polystyrene-foam board.

2.16 DUCT ACCESS PANEL ASSEMBLIES

A. Manufacturers: Subject to compliance with requirements, provide products by one of the following:

1. CL WARD & Family Inc.
2. Ductmate Industries, Inc; a DMI company.
3. Flame Gard, Inc.

B. Access panels used in cooking applications:

1. Labeled compliant to NFPA 96 for grease duct access doors.
2. Labeled in accordance with UL 1978 by an NRTL.

C. Panel and Frame: Minimum thickness 16-gauge carbon steel.

D. Fasteners: Carbon steel. Panel fasteners shall not penetrate duct wall.

E. Gasket: Comply with NFPA 96, grease-tight, high-temperature ceramic fiber, rated for minimum 2000 deg F.

F. Minimum Pressure Rating: 10 inches wg positive or negative.

2.17 FLEXIBLE CONNECTORS

A. Fire-Performance Characteristics: Adhesives, sealants, fabric materials, and accessory materials shall have flame-spread index not exceeding 25 and smoke-developed index not exceeding 50 when tested in accordance with ASTM E84.

B. Airstream Surfaces: Surfaces in contact with the airstream shall comply with requirements in ASHRAE 62.1.

C. Materials: Flame-retardant or noncombustible fabrics.

D. Coatings and Adhesives: Comply with UL 181, Class 1.

E. Metal-Edged Connectors: Factory fabricated with a fabric strip 5-3/4 inches wide attached to two strips of 2-3/4-inch-wide, 0.028-inch- thick, galvanized sheet steel or 0.032-inch-thick aluminum sheets. Provide metal compatible with connected ducts.

F. Indoor System, Flexible Connector Fabric: Glass fabric double coated with neoprene.

1. Minimum Weight: 26 oz./sq. yd..
2. Tensile Strength: 480 lbf/inch in the warp and 360 lbf/inch in the filling.
3. Service Temperature: Minus 40 to plus 200 deg F.

G. Outdoor System, Flexible Connector Fabric: Glass fabric double coated with weatherproof, synthetic rubber resistant to UV rays and ozone.

1. Minimum Weight: 24 oz./sq. yd..
2. Tensile Strength: 530 lbf/inch in the warp and 440 lbf/inch in the filling.
3. Service Temperature: Minus 50 to plus 250 deg F.

H. High-Temperature System, Flexible Connectors: Glass fabric coated with silicone rubber.

1. Minimum Weight: 16 oz./sq. yd..
2. Tensile Strength: 285 lbf/inch in the warp and 185 lbf/inch in the filling.
3. Service Temperature: Minus 67 to plus 500 deg F.

I. High-Corrosive-Environment System, Flexible Connectors: Glass fabric with chemical-resistant coating.

1. Minimum Weight: 14 oz./sq. yd..
2. Tensile Strength: 450 lbf/inch in the warp and 340 lbf/inch in the filling.
3. Service Temperature: Minus 67 to plus 500 deg F.

J. Thrust Limits: Combination coil spring and elastomeric insert with spring and insert in compression, and with a load stop. Include rod and angle-iron brackets for attaching to fan discharge and duct.

1. Frame: Steel, fabricated for connection to threaded rods and to allow for a maximum of 30 degrees of angular rod misalignment without binding or reducing isolation efficiency.
2. Outside Spring Diameter: Not less than 80 percent of the compressed height of the spring at rated load.
3. Minimum Additional Travel: 50 percent of the required deflection at rated load.
4. Lateral Stiffness: More than 80 percent of rated vertical stiffness.
5. Overload Capacity: Support 200 percent of rated load, fully compressed, without deformation or failure.

6. Elastomeric Element: Molded, oil-resistant rubber or neoprene.
7. Coil Spring: Factory set and field adjustable for a maximum of 1/4-inch movement at start and stop.

2.18 DUCT SECURITY BARS

A. Manufacturers: Subject to compliance with requirements, provide products by one of the following:

1. Carnes Company.
2. Kees, Inc.
3. Price Industries.
4. United Enertech.

B. Description: Field- or factory-fabricated and field-installed duct security bars.

C. Configuration:

1. Angle frame of 2-1/2 by 2-1/2 by 1/4 inch.
2. Sleeve: 0.1345-inch, continuously welded steel frames with 1-by-1-by-3/16-inch angle frame factory welded to one end. To be poured in place or set with concrete block or welded or bolted to wall, one side only. Duct connections on both sides.
3. Horizontal Bars: 1/2 inch.
4. Vertical Bars: 1/2 inch.
5. Bar Spacing: 6 inches.
6. Mounting: Metal deck or roofing, Bolted or welded, Bolted or welded with masonry anchors, Ductwork or other framing, Poured in place or set with concrete block Welded or bolted to one wall (one side only), Bar extends 6 inches into wall. Select to suit application.

2.19 DUCT ACCESSORY HARDWARE

A. Manufacturers: Subject to compliance with requirements, provide products by one of the following:

1. CL WARD & Family Inc.
2. Ductmate Industries, Inc; a DMI company.
3. Duro Dyne Inc.
4. United Enertech.
5. Ventfabrics, Inc.
6. Ward Industries; a brand of Hart & Cooley, Inc.

B. Instrument Test Holes: Cast iron or cast aluminum to suit duct material, including screw cap and gasket. Size to allow insertion of pitot tube and other testing instruments and of length to suit duct-insulation thickness.

C. Adhesives: High strength, quick setting, neoprene based, waterproof, and resistant to gasoline and grease.

2.20 MATERIALS

A. Galvanized Sheet Steel: Comply with ASTM A653/A653M.

1. Galvanized Coating Designation: G90.
2. Exposed-Surface Finish: Mill phosphatized.

B. Stainless Steel Sheets: Comply with ASTM A480/A480M, Type 304, and having a No. 2 finish for concealed ducts and finish for exposed ducts.

C. Aluminum Sheets: Comply with ASTM B209, Alloy 3003, Temper H14; with mill finish for concealed ducts and standard, one-side bright finish for exposed ducts.

D. Extruded Aluminum: Comply with ASTM B221, Alloy 6063, Temper T6.

E. Reinforcement Shapes and Plates: Galvanized-steel reinforcement where installed on galvanized sheet metal ducts; compatible materials for aluminum and stainless steel ducts.

F. Tie Rods: Galvanized steel, 1/4-inch minimum diameter for lengths 36 inches or less; 3/8-inch minimum diameter for lengths longer than 36 inches.

PART 3 - EXECUTION

3.1 INSTALLATION

A. Install duct accessories in accordance with applicable details in SMACNA's "HVAC Duct Construction Standards - Metal and Flexible" for metal ducts and in NAIMA AH116 for fibrous-glass ducts.

B. Install duct accessories of materials suited to duct materials; use galvanized-steel accessories in galvanized-steel and fibrous-glass ducts, stainless steel accessories in stainless steel ducts, and aluminum accessories in aluminum ducts.

C. Install backdraft or control dampers at inlet of exhaust fans or exhaust ducts as close as possible to exhaust fan unless otherwise indicated.

D. Where multiple damper sections are necessary to achieve required dimensions, provide reinforcement to fully support damper assembly when fully closed at full system design static pressure.

E. Install volume dampers at points on supply, return, and exhaust systems where branches extend from larger ducts. Where dampers are installed in ducts having duct liner, install dampers with hat channels of same depth as liner, and terminate liner with nosing at hat channel.

1. Install steel volume dampers in steel ducts.
2. Install aluminum volume dampers in aluminum ducts.

F. Set dampers to fully open position before testing, adjusting, and balancing.

G. Install test holes at fan inlets and outlets and elsewhere as indicated and as needed for testing and balancing.

H. Install fire and smoke dampers in accordance with UL listing.

I. Duct security bars:

1. Connect duct security bars to ducts with flexible connections. Provide 12-by-12-inch hinged access panel with cam lock in duct in each side of sleeve.
2. Secure duct security bar assembly to building structure as indicated in manufacturer's installation instructions.

J. Connect ducts to duct silencers rigidly.

K. Install duct access doors on sides of ducts to allow for inspecting, adjusting, and maintaining accessories and equipment at the following locations:

1. On both sides of duct coils.
2. Upstream from duct filters.
3. At outdoor-air intakes and mixed-air plenums.
4. At drain pans and seals.
5. Downstream from manual volume dampers, control dampers, backdraft dampers, and equipment.
6. Adjacent to and close enough to fire or smoke dampers, to reset or reinstall fusible links. Access doors for access to fire or smoke dampers having fusible links shall be pressure relief access doors and shall be outward operation for access doors installed upstream from dampers and inward operation for access doors installed downstream from dampers.
7. For grease ducts, install at locations and spacing as required by NFPA 96.
8. Control devices requiring inspection.
9. Elsewhere as indicated.

L. Install access doors with swing against duct static pressure.

M. Access Door Sizes:

1. One-Hand or Inspection Access: 8 by 5 inches.
2. Two-Hand Access: 12 by 6 inches.
3. Head and Hand Access: 18 by 10 inches.
4. Head and Shoulders Access: 21 by 14 inches.
5. Body Access: 25 by 14 inches.
6. Body plus Ladder Access: 25 by 17 inches.

N. Label access doors according to Section 230553 "Identification for HVAC Piping and Equipment" to indicate the purpose of access door.

O. Install flexible connectors to connect ducts to equipment.

P. For fans developing static pressures of 5 inches wg and more, cover flexible connectors with loaded vinyl sheet held in place with metal straps.

Q. Install duct test holes where required for testing and balancing purposes.

R. Install thrust limits at centerline of thrust, symmetrical on both sides of equipment. Attach thrust limits at centerline of thrust and adjust to a maximum of 1/4-inch movement during start and stop of fans.

3.2 FIELD QUALITY CONTROL

A. Tests and Inspections:

1. Operate dampers to verify full range of movement.

2. Inspect locations of access doors, and verify that size and location of access doors are adequate to perform required operation.
3. Operate fire, smoke, and combination fire and smoke dampers to verify full range of movement and that proper heat-response device is installed.
4. Inspect turning vanes for proper and secure installation and verify that vanes do not move or rattle.
5. Operate remote damper operators to verify full range of movement of operator and damper.

END OF SECTION 23 33 00

SECTION 23 33 46 - FLEXIBLE DUCTS

PART 1 - GENERAL

1.1 RELATED DOCUMENTS

A. Drawings and general provisions of the Contract, including General and Supplementary Conditions and Division 01 Specification Sections, apply to this Section.

1.2 SUMMARY

A. Section Includes:

1. Non-insulated flexible ducts.
2. Insulated flexible ducts.

1.3 ACTION SUBMITTALS

A. Product Data: For each type of product.

B. Shop Drawings: For flexible ducts.

1. Include plans showing locations and mounting and attachment details.

1.4 INFORMATIONAL SUBMITTALS

A. Coordination Drawings: Reflected ceiling plans, drawn to scale, on which ceiling-mounted access panels and access doors required for access to duct accessories are shown and coordinated with each other, using input from installers of the items involved.

PART 2 - PRODUCTS

2.1 ASSEMBLY DESCRIPTION

A. Comply with NFPA 90A, "Installation of Air Conditioning and Ventilating Systems," and with NFPA 90B, "Installation of Warm Air Heating and Air Conditioning Systems."

B. Comply with SMACNA's "HVAC Duct Construction Standards - Metal and Flexible" for acceptable materials, material thicknesses, and duct construction methods unless otherwise indicated. Sheet metal materials shall be free of pitting, seam marks, roller marks, stains, discolorations, and other imperfections.

C. Comply with the Air Diffusion Council's "ADC Flexible Air Duct Test Code FD 72-R1."

D. Comply with ASTM E96/E96M, "Test Methods for Water Vapor Transmission of Materials."

2.2 NON-INSULATED FLEXIBLE DUCTS

A. Manufacturers: Subject to compliance with requirements, provide products by one of the following:

1. Flexmaster U.S.A., Inc.
2. McGill AirFlow LLC.
3. Thermaflex; a Flex-Tek Group company.
4. Ward Industries; a brand of Hart & Cooley, Inc.

B. Non-Insulated, Flexible Duct: UL 181, Class 1, aluminum laminate and polyester film with latex adhesive supported by helically wound, spring-steel wire.

1. Pressure Rating: 10-inch wg positive and 1.0-inch wg negative.
2. Maximum Air Velocity: 4000 fpm.
3. Temperature Range: Minus 20 to plus 210 deg F.

2.3 INSULATED FLEXIBLE DUCTS

A. Manufacturers: Subject to compliance with requirements, provide products by one of the following:

1. Flexmaster U.S.A., Inc.
2. McGill AirFlow LLC.
3. Thermaflex; a Flex-Tek Group company.
4. Ward Industries; a brand of Hart & Cooley, Inc.

B. Insulated, Flexible Duct: UL 181, Class 1, two-ply vinyl film supported by helically wound, spring-steel wire; fibrous-glass insulation; polyethylene vapor-barrier film.

1. Pressure Rating: 10-inch wg positive and 1.0-inch wg negative.
2. Maximum Air Velocity: 4000 fpm.
3. Temperature Range: Minus 10 to plus 160 deg F.
4. Insulation R-Value: Comply with ASHRAE/IES 90.1.

2.4 FLEXIBLE DUCT CONNECTORS

A. Clamps: Nylon strap in sizes 3 through 18 inches, to suit duct size.

B. Non-Clamp Connectors: Adhesive plus sheet metal screws.

PART 3 - EXECUTION

3.1 INSTALLATION

A. Install flexible ducts according to applicable details in SMACNA's "HVAC Duct Construction Standards - Metal and Flexible" for metal ducts and in NAIMA AH116, "Fibrous Glass Duct Construction Standards," for fibrous-glass ducts.

B. Install in indoor applications only. Flexible ductwork should not be exposed to UV lighting.

C. Connect diffusers or light troffer boots to ducts directly or with maximum 48-inch lengths of flexible duct clamped or strapped in place.

D. Connect flexible ducts to metal ducts with liquid adhesive plus tape.

E. Install duct test holes where required for testing and balancing purposes.

F. Installation:

1. Install ducts fully extended.
2. Do not bend ducts across sharp corners.
3. Bends of flexible ducting shall not exceed a minimum of one duct diameter.
4. Avoid contact with metal fixtures, water lines, pipes, or conduits.
5. Install flexible ducts in a direct line, without sags, twists, or turns.

G. Supporting Flexible Ducts:

1. Suspend flexible ducts with bands 1-1/2 inches wide or wider and spaced a maximum of 48 inches apart. Maximum centerline sag between supports shall not exceed 1/2 inch per 12 inches.
2. Install extra supports at bends placed approximately one duct diameter from center line of the bend.
3. Ducts may rest on ceiling joists or truss supports. Spacing between supports shall not exceed the maximum spacing per manufacturer's written installation instructions.
4. Vertically installed ducts shall be stabilized by support straps at a maximum of 72 inches o.c.

END OF SECTION 23 33 46

SECTION 23 34 16 - CENTRIFUGAL HVAC FANS

PART 1 - GENERAL

1.1 RELATED DOCUMENTS

A. Drawings and general provisions of the Contract, including General and Supplementary Conditions and Division 01 Specification Sections, apply to this Section.

1.2 SUMMARY

A. Section Includes:

1. Backward-inclined centrifugal fans, including airfoil and curved blade fans.
2. Forward-curved centrifugal fans.
3. Square in-line centrifugal fans.
4. Tubular in-line centrifugal fans.
5. Plenum fans.
6. Plug fans.
7. Utility set fans.

1.3 ACTION SUBMITTALS

A. Product Data: For each type of product.

1. Construction details, material descriptions, dimensions of individual components and profiles, and finishes for fans.
2. Rated capacities, operating characteristics, and furnished specialties and accessories.
3. Certified fan performance curves with system operating conditions indicated.
4. Certified fan sound-power ratings.
5. Motor ratings and electrical characteristics, plus motor and electrical accessories.
6. Material thickness and finishes, including color charts.
7. Dampers, including housings, linkages, and operators.
8. Fan speed controllers.

B. Shop Drawings:

1. Include plans, elevations, sections, and attachment details.
2. Include details of equipment assemblies. Indicate dimensions, weights, loads, required clearances, method of field assembly, components, and location and size of each field connection.
3. Include diagrams for power, signal, and control wiring.
4. Design Calculations: Calculate requirements for selecting vibration isolators and seismic restraints and for designing vibration isolation bases.
5. Vibration Isolation Base Details: Detail fabrication, including anchorages and attachments to structure and to supported equipment. Include adjustable motor bases, rails, and frames for equipment mounting.

C. Sustainable Design Submittals:

1. Product data showing compliance with ASHRAE 62.1.

D. Delegated Design Submittal: For vibration isolation, supports, and seismic restraints indicated to comply with performance requirements and design criteria, including analysis data signed and sealed by the qualified professional engineer responsible for their preparation.

1. Design Calculations: Calculate requirements for selecting vibration isolators, supports, , seismic restraints, and for designing vibration isolation bases.

1.4 INFORMATIONAL SUBMITTALS

A. Coordination Drawings: Fan room layout and relationships between components and adjacent structural and mechanical elements, drawn to scale, and coordinated with each other, using input from installers of the items involved.

B. Seismic Qualification Data: For fans, accessories, and components, from manufacturer.

1. Basis for Certification: Indicate whether withstand certification is based on actual test of assembled components or on calculation.
2. Dimensioned Outline Drawings of Equipment Unit: Identify center of gravity, and locate and describe mounting and anchorage provisions.
3. Detailed description of equipment anchorage devices on which the certification is based and their installation requirements.

C. Field quality-control reports.

1.5 CLOSEOUT SUBMITTALS

A. Operation and Maintenance Data: For centrifugal fans to include in normal operation, emergency operation, and maintenance manuals with replacement parts listing.

1.6 MAINTENANCE MATERIAL SUBMITTALS

A. Furnish extra materials, from the same product run, that match products installed and that are packaged with protective covering for storage and identified with labels describing contents.

1. Belts: One set(s) for each belt-driven unit.

PART 2 - PRODUCTS

2.1 PERFORMANCE REQUIREMENTS

A. Electrical Components, Devices, and Accessories: Listed and labeled as defined in NFPA 70, by a qualified testing agency, and marked for intended location and application.

B. NFPA Compliance: Comply with NFPA 90A for design, fabrication, and installation of unit components.

C. ASHRAE 62.1 Compliance: Applicable requirements in ASHRAE 62.1, Section 5 - "Systems and Equipment" and Section 7 - "Construction and System Startup."

D. ASHRAE/IES 90.1 Compliance: Applicable requirements in ASHRAE/IES 90.1, Section 6 - "Heating, Ventilating, and Air-Conditioning."

E. Delegated Design: Engage a qualified professional engineer, as defined in Section 014000 "Quality Requirements," to design vibration isolation, supports and seismic restraints, including comprehensive engineering analysis by a qualified professional engineer, using performance and design criteria indicated.

F. Seismic Performance: Centrifugal fans shall withstand the effects of earthquake motions determined according to ASCE/SEI 7. See Section 230548 "Vibration and Seismic Controls for HVAC."

1. The term "withstand" means "the unit will remain in place without separation of any parts when subjected to the seismic forces specified and the unit will be fully operational after the seismic event."
2. Component Importance Factor: Refer to Structural drawings for project related information.
3. Component Amplification Factor and Component Response Modification Factor: Refer to Structural drawings for project related information.

2.2 BACKWARD-INCLINED CENTRIFUGAL FANS

A. Basis-of-Design Product: Subject to compliance with requirements, provide product indicated on Drawings or comparable product by one of the following:

1. Acme Engineering & Manufacturing Corp.
2. Aerovent; a division of Twin City Fan Companies, Ltd.
3. Chicago Blower Corporation.
4. Loren Cook Company.
5. New York Blower Company (The).

B. Description:

1. Factory-fabricated, -assembled, -tested, and -finished, belt- or direct-driven centrifugal fans, consisting of housing, wheel, fan shaft, bearings, motor, drive assembly, and support structure. Deliver fans as factory-assembled units, to the extent allowable by shipping limitations.
2. Factory-installed and -wired disconnect switch.

C. Housings:

1. Housing Material: See schedule.
2. Housing Coating: See schedule.
3. Housing Assembly: Sideplates continuously welded or spot welded or attached by continuous Pittsburgh lock seal or similar seal.
4. Formed panels to make curved-scroll housings with shaped cutoff.
5. Panel Bracing: Steel angle- or channel-iron member supports for mounting and supporting fan scroll, wheel, motor, and accessories.
6. Spun inlet cone with flange.
7. Outlet flange.
8. Discharge Arrangement: Fan scroll housing is field rotatable to any of eight discharge positions. Provide fan with discharge positioned in proper direction to minimize connected duct turns.

D. Wheels:

1. Wheel Configuration: SWSI or DWDI construction with a precision-spun curved inlet flange and a backplate fastened to shaft with setscrews. Wheels shall be statically and dynamically balanced, and nonoverloading.
2. Wheel and Blade Material: See schedule.

    a. Spark-Resistant Construction: Classified according to AMCA 99, Section 8, See schedule.

3. Wheel and Blade Coating: See schedule.
4. Cast-iron or cast-steel hub riveted to backplate and fastened to shaft with set screws.
5. Backward-Inclined Airfoil Blades:

    a. Aerodynamic design.
    b. Heavy backplate.
    c. Hollow die-formed, airfoil-shaped blades continuously welded at tip flange and backplate.

6. Backward-Inclined Curved Blades:

    a. Curved design.
    b. Heavy backplate.
    c. Single-thickness blades continuously welded at tip flange and backplate.

E. Shafts:

1. Statically and dynamically balanced, and selected for continuous operation at maximum rated fan speed and motor horsepower, with adjustable alignment and belt tensioning.
2. Turned, ground, and polished hot-rolled steel with keyway. Ship with protective coating of lubricating oil.
3. Designed to operate at no more than 70 percent of first critical speed at top of fan's speed range.

F. Bearings:

1. Prelubricated and Sealed Shaft Bearings:

    a. Self-aligning, pillow-block-type ball bearings.
    b. Ball-Bearing Rating Life: ABMA 9, L(10) at 50,000 hours.
    c. Roller-Bearing Rating Life: ABMA 11, L(10) at 50,000 hours.

2. Grease-Lubricated Shaft Bearings, Tapered Roller:

    a. Self-aligning, pillow-block-type, tapered roller bearings with double-locking collars and two-piece, cast-iron housing.
    b. Roller-Bearing Rating Life: ABMA 11, L(10) at 50,000 hours.
    c. Extended Lubrication Lines: Extend lines to accessible location.

3. Grease-Lubricated Shaft Bearings, Ball or Roller:

    a. Self-aligning, pillow-block-type, ball or roller bearings with adapter mount and two-piece, cast-iron housing.
    b. Ball-Bearing Rating Life: ABMA 9, L(10) at 50,000 hours.
    c. Roller-Bearing Rating Life: ABMA 11, L(10) at 50,000 hours.
    d. Extended Lubrication Lines: Extend lines to accessible location.

G. Belt Drives:

1. Factory mounted, with adjustable alignment and belt tensioning.
2. Service Factor Based on Fan Motor Size: 1.5.
3. Fan Pulleys: Cast iron or cast steel with split, tapered bushing; dynamically balanced at factory.
4. Motor Pulleys: Adjustable pitch for use with motors through 5 hp. Select pulley so pitch adjustment is at the middle of adjustment range at fan design conditions. Provide fixed pitch pulleys for use with motors larger than 5 hp.
5. Belts: Oil resistant, nonsparking, and nonstatic; matched sets for multiple belt drives.
6. Belt Guards: Comply with OSHA and fabricate according to SMACNA's "HVAC Duct Construction Standards"; 0.146 inch- thick, 3/4-inch diamond-mesh wire screen, welded to steel angle frame or equivalent, prime coated. Secure to fan or fan supports without short-circuiting vibration isolation. Include provisions for adjustment of belt tension, lubrication, and use of tachometer with guard in place.
7. Motor Mount: Adjustable for belt tensioning.

H. Motor Enclosure: Open, dripproof, Totally enclosed, fan cooled, Explosion proof or Totally enclosed, air over.

I. Accessories:

1. Access for Inspection, Cleaning, and Maintenance: Comply with requirements in ASHRAE 62.1.
2. Scroll Drain Connection: NPS 1 steel pipe coupling welded to low point of fan scroll.
3. Companion Flanges: Rolled flanges for duct connections of same material as housing.
4. Inlet Screens: Grid screen of same material as housing.
5. Shaft Cooler: Metal disk between bearings and fan wheel, designed to dissipate heat from shaft.
6. Shaft Seals: Airtight seals installed around shaft on drive side of single-width fans.
7. Weather Cover: Enameled-steel sheet with ventilation slots, bolted to housing.
8. Piezometer Ring: Piezometer ring mounted at fan inlet cone for airflow measurement.

2.3 FORWARD-CURVED CENTRIFUGAL FANS

A. Basis-of-Design Product: Subject to compliance with requirements, provide product indicated on Drawings or comparable product by one of the following:

1. Acme Engineering & Manufacturing Corp.
2. Central Blower Company.
3. New York Blower Company (The).

B. Description:

1. Factory-fabricated, -assembled, -tested, and -finished, belt- or direct-driven centrifugal fans, consisting of housing, wheel, fan shaft, bearings, motor, drive assembly, and support structure.
2. Deliver fans as factory-assembled units, to the extent allowable by shipping limitations.
3. Factory-installed and -wired disconnect switch.

C. Housings:

1. Housing Material: See schedule.
2. Housing Coating: See schedule.

3. Housing Assembly: Sideplates continuously welded or spot welded or attached by continuous Pittsburgh lock seal or similar seal.
4. Formed panels to make curved-scroll housings with shaped cutoff.
5. Panel Bracing: Steel angle- or channel-iron member supports for mounting and supporting fan scroll, wheel, motor, and accessories.
6. Spun inlet cone with flange.
7. Outlet flange.
8. Discharge Arrangement: Fan scroll housing field rotatable to any of eight discharge positions. Provide fan with discharge positioned in proper direction to minimize connected duct turns.

D. Wheels:

1. Wheel Configuration: SWSI or DWDI construction with a curved inlet flange, and a backplate fastened to shaft with setscrews.
2. Wheel and Blade Material: See schedule.

   a. Spark-Resistant Construction: Classified according to AMCA 99, Section 8, See schedule.

3. Wheel and Blade Coating: See schedule.
4. Cast-iron or cast-steel hub riveted to backplate and fastened to shaft with setscrews.
5. Forward-Curved Wheels:

   a. Black-enameled or galvanized-steel construction with inlet flange, backplate, and shallow blades with inlet and tip curved forward in direction of airflow.
   b. Mechanically secured to flange and backplate; cast-steel hub swaged to backplate and fastened to shaft with setscrews.

E. Shafts:

1. Statically and dynamically balanced and selected for continuous operation at maximum rated fan speed and motor horsepower, with adjustable alignment and belt tensioning.
2. Turned, ground, and polished hot-rolled steel with keyway. Ship with protective coating of lubricating oil.
3. Designed to operate at no more than 70 percent of first critical speed at top of fan's speed range.

F. Bearings:

1. Prelubricated and Sealed Shaft Bearings:

   a. Self-aligning, pillow-block-type ball or roller bearings.
   b. Ball-Bearing Rating Life: ABMA 9, L(10) at 50,000 hours.
   c. Roller-Bearing Rating Life: ABMA 11, L(10) at 50,000 hours.

2. Grease-Lubricated Shaft Bearings, Tapered Roller:

   a. Self-aligning, pillow-block-type, tapered roller bearings with double-locking collars and two-piece, cast-iron housing.
   b. Roller-Bearing Rating Life: ABMA 11, L(10) at 50,000 hours.
   c. Extended Lubrication Lines: Extend lines to accessible location.

3. Grease-Lubricated Shaft Bearings, Ball or Roller:

a. Self-aligning, pillow-block-type, ball or roller bearings with adapter mount and two-piece, cast-iron housing.
b. Ball-Bearing Rating Life: ABMA 9, L(10) at 50,000 hours.
c. Roller-Bearing Rating Life: ABMA 11, L(10) at 50,000 hours.
d. Extended Lubrication Lines: Extend lines to accessible location.

G. Belt Drives:

1. Factory mounted, with adjustable alignment and belt tensioning.
2. Service Factor Based on Fan Motor Size: 1.5.
3. Fan Pulleys: Cast iron or cast steel with split, tapered bushing; dynamically balanced at factory.
4. Motor Pulleys: Adjustable pitch for use with motors through 5 hp. Select pulley so pitch adjustment is at the middle of adjustment range at fan design conditions. Provide fixed pitch for use with motors larger than 5 hp.
5. Belts: Oil resistant, nonsparking, and nonstatic; matched sets for multiple belt drives.
6. Belt Guards: Comply with OSHA and fabricate according to SMACNA's "HVAC Duct Construction Standards"; 0.146 inch- thick, 3/4-inch diamond-mesh wire screen, welded to steel angle frame or equivalent, prime coated. Secure to fan or fan supports without short-circuiting vibration isolation. Include provisions for adjustment of belt tension, lubrication, and use of tachometer with guard in place.
7. Motor Mount: Adjustable for belt tensioning.

H. Motor Enclosure: Open, dripproof, Totally enclosed, fan cooled, Totally enclosed, air over, or Explosion-proof.

I. Accessories:

1. Access for Inspection, Cleaning, and Maintenance: Comply with requirements in ASHRAE 62.1.
2. Scroll Drain Connection: NPS 1 steel pipe coupling welded to low point of fan scroll.
3. Companion Flanges: Rolled flanges for duct connections of same material as housing.
4. Inlet Screens: Grid screen of same material as housing.
5. Shaft Cooler: Metal disk between bearings and fan wheel, designed to dissipate heat from shaft.
6. Shaft Seals: Airtight seals installed around shaft on drive side of single-width fans.
7. Weather Cover: Enameled-steel sheet with ventilation slots, bolted to housing.
8. Piezometer Ring: Piezometer ring mounted at fan inlet cone for airflow measurement.

2.4 SQUARE IN-LINE CENTRIFUGAL FANS

A. Basis-of-Design Product: Subject to compliance with requirements, provide product indicated on Drawings or comparable product by one of the following:

1. Acme Engineering & Manufacturing Corp.
2. Aerovent; a division of Twin City Fan Companies, Ltd.
3. Greenheck Fan Corporation.
4. Hartzell Fan Incorporated.
5. Loren Cook Company.
6. PennBarry; division of Air System Components.

B. Description: Square in-line centrifugal fans.

C. Housing:

1. Housing Material: See schedule.
2. Housing Coating: See schedule.
3. Housing Construction: Side panels shall be easily removable for service. Include inlet and outlet flanges, and support bracket adaptable to floor, side wall, or ceiling mounting.

D. Direct-Drive Units: Motor mounted in airstream, factory wired to disconnect switch located on outside of fan housing; with wheel, inlet cone, and motor on swing-out service door.

E. Belt-Driven Units: Motor mounted on adjustable base, with adjustable sheaves, enclosures around belts within fan housing, and lubricating tubes from fan bearings extended to outside of fan housing.

F. Fan Wheels: Aluminum airfoil blades welded to aluminum hub.

G. Motor Enclosure: Open, dripproof, Totally enclosed, fan cooled, Totally enclosed, air over, or Explosion-proof.

H. Accessories:

1. Access for Inspection, Cleaning, and Maintenance: Comply with requirements in ASHRAE 62.1.
2. Variable-Speed Controller: Solid-state control to reduce speed from 100 to less than 50 percent.
3. Companion Flanges: For inlet and outlet duct connections.
4. Fan Guards: 1/2- by 1-inch mesh of galvanized steel in removable frame. Provide guard for inlet or outlet for units not connected to ductwork.
5. Motor and Drive Cover (Belt Guard): Epoxy-coated steel.

2.5 TUBULAR IN-LINE CENTRIFUGAL FANS

A. Basis-of-Design Product: Subject to compliance with requirements, provide product indicated on Drawings or comparable product by one of the following:

1. Acme Engineering & Manufacturing Corp.
2. Aerovent; a division of Twin City Fan Companies, Ltd.
3. Greenheck Fan Corporation.
4. Hartzell Fan Incorporated.
5. Loren Cook Company.
6. New York Blower Company (The).
7. PennBarry; division of Air System Components.

B. Description: Tubular in-line centrifugal fans.

C. Housing:

1. Housing Material: See schedule.
2. Housing Coating: See schedule.
3. Housing Construction: Split, spun aluminum with aluminum straightening vanes, inlet and outlet flanges, and support bracket adaptable to floor, side wall, or ceiling mounting.

D. Direct-Drive Units: Motor mounted in airstream, factory wired to disconnect switch located on outside of fan housing; with wheel, inlet cone, and motor on swing-out service door.

E. Belt-Driven Units: Motor mounted on adjustable base, with adjustable sheaves, enclosure around belts within fan housing, and lubricating tubes from fan bearings extended to outside of fan housing.

F. Fan Wheels: Steel or Aluminum, airfoil blades welded to aluminum hub.

G. Motor Enclosure: Open, dripproof, Totally enclosed, fan cooled, Totally enclosed, air over, or Explosion-proof.

H. Accessories:

1. Access for Inspection, Cleaning, and Maintenance: Comply with requirements in ASHRAE 62.1.
2. Variable-Speed Controller: Solid-state control to reduce speed from 100 to less than 50 percent.
3. Companion Flanges: For inlet and outlet duct connections.
4. Fan Guards: 1/2- by 1-inch mesh of galvanized steel in removable frame. Provide guard for inlet or outlet for units not connected to ductwork.
5. Motor and Drive Cover (Belt Guard): Epoxy-coated steel.

2.6 PLENUM FANS

A. Basis-of-Design Product: Subject to compliance with requirements, provide product indicated on Drawings or comparable product by one of the following:

1. Chicago Blower Corporation.
2. Cincinnati Fan.
3. Loren Cook Company.
4. New York Blower Company (The).

B. Description:

1. Factory-fabricated, -assembled, -tested, and -finished, belt- or direct-driven centrifugal fans, consisting of wheel, fan shaft, bearings, motor, drive assembly, and support structure.
2. Deliver fans as factory-assembled units, to the extent allowable by shipping limitations.
3. Factory-installed and -wired disconnect switch.

C. Wheels:

1. Wheel Configuration: SWSI construction with curved inlet flange and heavy backplate; fastened to shaft with setscrews.
2. Wheel and Blade Material: See schedule.

   a. Spark-Resistant Construction: Classified according to AMCA 99, Section 8, See schedule.

3. Wheel and Blade Coating: See schedule.
4. Backward-Inclined Airfoil Blades: Hollow, die-formed, airfoil-shaped blades continuously welded at tip flange and backplate.

D. Shafts:

1. Statically and dynamically balanced, and selected for continuous operation at maximum-rated fan speed and motor horsepower, with adjustable alignment and belt tensioning.

2. Turned, ground, and polished hot-rolled steel with keyway. Ship with protective coating of lubricating oil.
3. Designed to operate at no more than 70 percent of first critical speed at top of fan's speed range.

E. Bearings:

1. Prelubricated and Sealed Shaft Bearings:

   a. Self-aligning, pillow-block-type ball bearings.
   b. Ball-Bearing Rating Life: ABMA 9, L(10) at 50,000 hours.
   c. Roller-Bearing Rating Life: ABMA 11, L(10) at 50,000 hours.

2. Grease-Lubricated Shaft Bearings, Tapered Roller:

   a. Self-aligning, pillow-block-type, tapered roller bearings with double-locking collars and two-piece, cast-iron housing.
   b. Roller-Bearing Rating Life: ABMA 11, L(10) at 50,000 hours.
   c. Extended Lubrication Lines: Extend lines to accessible location.

3. Grease-Lubricated Shaft Bearings, Ball or Roller:

   a. Self-aligning, pillow-block-type, ball or roller bearings with adapter mount and two-piece, cast-iron housing.
   b. Ball-Bearing Rating Life: ABMA 9, L(10) at 50,000 hours.
   c. Roller-Bearing Rating Life: ABMA 11, L(10) at 50,000 hours.
   d. Extended Lubrication Lines: Extend lines to accessible location.

F. Belt Drives:

1. Factory mounted, with adjustable alignment and belt tensioning.
2. Service Factor Based on Fan Motor Size: 1.5.
3. Fan Pulleys: Cast iron or cast steel with split, tapered bushing; dynamically balanced at factory.
4. Motor Pulleys: Adjustable pitch for use with motors through 5 hp. Select pulley so pitch adjustment is at the middle of adjustment range at fan design conditions. Provide fixed pitch for use with motors larger than 5 hp.
5. Belts: Oil resistant, nonsparking, and nonstatic; matched sets for multiple belt drives.
6. Belt Guards: Comply with OSHA and fabricate to SMACNA's "HVAC Duct Construction Standards"; 0.146 inch- thick, 3/4-inch diamond-mesh wire screen welded to steel angle frame or equivalent, prime coated. Secure to fan or fan supports without short-circuiting vibration isolation. Include provisions for adjustment of belt tension, lubrication, and use of tachometer with guard in place.
7. Motor Mount: Adjustable for belt tensioning.

G. Motor Enclosure: Open, dripproof, Totally enclosed, fan cooled, Totally enclosed, air over, or Explosion proof.

H. Accessories:

1. Inlet Safety Screen: Comply with OSHA and fabricate according to SMACNA's "HVAC Duct Construction Standards." Diamond mesh wire screen is welded to steel angle frame or equivalent, prime coated.

2. Safety Enclosure: Comply with OSHA and fabricate according to SMACNA's "HVAC Duct Construction Standards." Diamond mesh wire screen is welded to steel angle frame or equivalent, prime coated.
3. Belt Guard: Comply with OSHA and fabricate according to SMACNA's "HVAC Duct Construction Standards." Diamond mesh wire screen is welded to steel angle frame or equivalent, prime coated.
4. Inlet Companion Flange: Rolled flanges for duct connections of same material as housing.
5. Shaft Cooler: Metal disk between bearings and fan wheel, designed to dissipate heat from shaft.
6. Shaft Seals: Airtight seals installed around shaft on drive side of single-width fans.
7. Piezometer Ring: Piezometer ring mounted at fan inlet cone for airflow measurement.

2.7 PLUG FANS

A. Basis-of-Design Product: Subject to compliance with requirements, provide product indicated on Drawings or comparable product by one of the following:

1. Chicago Blower Corporation.
2. Cincinnati Fan.
3. Loren Cook Company.
4. New York Blower Company (The).

B. Description:

1. Factory-fabricated, -assembled, -tested, and -finished, belt-driven centrifugal fans, consisting of wheel, fan shaft, bearings, motor, drive assembly, and support structure.
2. Deliver fans as factory-assembled units, to the extent allowable by shipping limitations.
3. Factory-installed and -wired disconnect switch.

C. Wheels:

1. Wheel Configuration: SWSI construction with curved inlet flange and heavy backplate; fastened to shaft with setscrews.
2. Wheel and Blade Material: See schedule.

   a. Spark-Resistant Construction: Classified according to AMCA 99, Section 8. See schedule.

3. Wheel and Blade Coating: See schedule.
4. Backward-Inclined Airfoil Blades: Hollow, die-formed, airfoil-shaped blades continuously welded at tip flange and backplate.

D. Shafts:

1. Statically and dynamically balanced, and selected for continuous operation at maximum rated fan speed and motor horsepower, with adjustable alignment and belt tensioning.
2. Turned, ground, and polished hot-rolled steel with keyway. Ship with protective coating of lubricating oil.
3. Designed to operate at no more than 70 percent of first critical speed at top of fan's speed range.

E. Bearings:

1. Prelubricated and Sealed Shaft Bearings:

a. Self-aligning, pillow-block-type ball bearings.
b. Ball-Bearing Rating Life: ABMA 9, L(10) at 50,000 hours.
c. Roller-Bearing Rating Life: ABMA 11, L(10) at 50,000 hours.

2. Grease-Lubricated Shaft Bearings, Tapered Roller:

a. Self-aligning, pillow-block-type, tapered roller bearings with double-locking collars and two-piece, cast-iron housing.
b. Ball-Bearing Rating Life: ABMA 9, L(10) at 50,000 hours.
c. Roller-Bearing Rating Life: ABMA 11, L(10) at 50,000 hours.
d. Extended Lubrication Lines: Extend lines to accessible location.

3. Grease-Lubricated Shaft Bearings, Ball or Roller:

a. Self-aligning, pillow-block-type, ball or roller bearings with adapter mount and two-piece, cast-iron housing.
b. Ball-Bearing Rating Life: ABMA 9, L(10) at 50,000 hours.
c. Roller-Bearing Rating Life: ABMA 11, L(10) at 50,000 hours.
d. Extended Lubrication Lines: Extend lines to accessible location.

F. Belt Drives:

1. Factory mounted, with adjustable alignment and belt tensioning.
2. Service Factor Based on Fan Motor Size: 1.5.
3. Fan Pulleys: Cast iron or cast steel with split, tapered bushing; dynamically balanced at factory.
4. Motor Pulleys: Adjustable pitch for use with motors through 5 hp. Select pulley so pitch adjustment is at the middle of adjustment range at fan design conditions. Provide fixed pitch for use with larger motors.
5. Belts: Oil resistant, nonsparking, and nonstatic; matched sets for multiple belt drives.
6. Belt Guards: Comply with OSHA and fabricate according to SMACNA's "HVAC Duct Construction Standards"; 0.146 inch- thick, 3/4-inch diamond-mesh wire screen, welded to steel angle frame or equivalent, prime coated. Secure to fan or fan supports without short-circuiting vibration isolation. Include provisions for adjustment of belt tension, lubrication, and use of tachometer with guard in place.
7. Motor Mount: Adjustable for belt tensioning.

G. Motor Enclosure: Open, dripproof, Totally enclosed, fan cooled, Totally enclosed, air over, or Explosion-proof.

H. Accessories:

1. Inlet Safety Screen: Comply with OSHA and fabricate according to SMACNA's "HVAC Duct Construction Standards." Diamond mesh wire screen is welded to steel angle frame or equivalent, prime coated.
2. Safety Enclosure: Comply with OSHA and fabricate according to SMACNA's "HVAC Duct Construction Standards." Diamond mesh wire screen is welded to steel angle frame or equivalent, prime coated.
3. Belt Guard: Comply with OSHA and fabricate according to SMACNA's "HVAC Duct Construction Standards." Diamond mesh wire screen is welded to steel angle frame or equivalent, prime coated.
4. Inlet Companion Flange: Rolled flanges for duct connections of same material as housing.
5. Shaft Cooler: Metal disk between bearings and fan wheel, designed to dissipate heat from shaft.
6. Shaft Seals: Airtight seals installed around shaft on drive side of single-width fans.

2.8 UTILITY SET FANS

A. Basis-of-Design Product: Subject to compliance with requirements, provide product indicated on Drawings or comparable product by one of the following:

1. Aerovent; a division of Twin City Fan Companies, Ltd.
2. Carnes Company.
3. Hartzell Fan Incorporated.
4. Loren Cook Company.
5. New York Blower Company (The).
6. PennBarry; division of Air System Components.

B. Description:

1. Factory-fabricated, -assembled, -tested, and -finished, belt- or direct-driven centrifugal fan utility vent sets, consisting of housing, wheel, fan shaft, bearings, motor, drive assembly, and support structure.

C. Housings:

1. Housing Material: See schedule.
2. Housing Coating: See schedule.
3. Formed panels to make curved-scroll housings with shaped cutoff.
4. Panel Bracing: Steel angle- or channel-iron member supports for mounting and supporting fan scroll, wheel, motor, and accessories.
5. Discharge Arrangement: Fan scroll housing field rotatable to any of eight discharge positions. Provide fan with discharge positioned in proper direction to minimize connected duct turns.

D. Wheels:

1. Wheel Configuration: SWSI, with hub keyed to shaft.
2. Wheel and Blade Materials: See schedule.

    a. Spark-Resistant Construction: Classified according to AMCA 99, Section 8. See schedule.

3. Wheel and Blade Coating: See schedule.
4. Backward-Inclined Airfoil Blades:

    a. Aerodynamic design.
    b. Heavy backplate.
    c. Hollow die-formed, airfoil-shaped blades continuously welded at tip flange and backplate.

5. Backward-Inclined Curved Blades:

    a. Curved design.
    b. Heavy backplate.
    c. Single-thickness blades continuously welded at tip flange and backplate.

6. Backward-Inclined Flat Blades:

    a. Flat design.
    b. Heavy backplate.

c. Single-thickness blades continuously welded at tip flange and backplate.

7. Forward-Curved Blades:

a. Curved design.
b. Heavy backplate.
c. Single-thickness blades continuously welded or riveted at tip flange and backplate.

E. Shafts:

1. Turned, ground, and polished steel; keyed to wheel hub. First critical speed at least 1.4 times maximum class speed.

F. Bearings:

1. Heavy-duty regreasable ball or roller type in a cast iron pillowblock housing.
2. Ball-Bearing Rating Life: ABMA 9, L(50) of 200,000 hours.
3. Roller-Bearing Rating Life: ABMA 11, L(50) of 200,000 hours.
4. Extend grease fitting to accessible location outside of unit.

G. Belt Drive:

1. Factory mounted, with final alignment and belt adjustment made after installation.
2. Service Factor Based on Fan Motor Size: 1.5.
3. Fan Pulleys: Cast iron or cast steel with split, tapered bushing; dynamically balanced at factory.
4. Motor Pulleys: Adjustable pitch for use with motors through 5 hp; fixed pitch for use with motors larger than 5 hp. Select pulley so pitch adjustment is at the middle of adjustment range at fan design conditions.
5. Belts: Oil resistant, nonsparking, and nonstatic; matched sets for multiple belt drives.
6. Belt Guards: Comply with OSHA and fabricate according to SMACNA's "HVAC Duct Construction Standards," 0.146 inch- thick, 3/4-inch diamond-mesh wire screen welded to steel angle frame or equivalent, prime coated. Secure to fan or fan supports without short-circuiting vibration isolation. Include provisions for adjustment of belt tension, lubrication, and use of tachometer with guard in place.

H. Motor Enclosure: Open, dripproof, Totally enclosed, fan cooled, or Explosion-proof.

I. Accessories:

1. Inlet and Outlet: Flanged.
2. Companion Flanges: Rolled flanges for duct connections of same material as housing.
3. Backdraft Dampers: Gravity actuated with counterweight and interlocking aluminum blades, with felt edges in steel frame installed on fan discharge.
4. Access Door: Gasketed door in scroll with latch-type handles.
5. Inlet Screens: Removable wire mesh.
6. Outlet Screens: Removable wire mesh.
7. Belt Guard: OSHA-compliant, completely enclosed shaft and drive components.
8. Shaft Cooler: Metal disk between bearings and fan wheel, designed to dissipate heat from shaft.
9. Drain Connections: NPS 3/4 threaded coupling drain connection installed at lowest point of housing.
10. Weather Hoods: Weather resistant with stamped vents over motor and drive compartment.
11. Grease Collection Trough and Receiver: For restaurant exhaust application.
12. Speed Controller: Solid-state control to reduce speed from 100 to less than 50 percent.

2.9 MOTORS

A. Comply with NEMA designation, temperature rating, service factor, and efficiency requirements for motors specified in Section 230513 "Common Motor Requirements for HVAC Equipment."

B. Where variable-frequency drives are indicated or scheduled, provide fan motor compatible with variable-frequency drive.

2.10 SOURCE QUALITY CONTROL

A. AMCA Certification for Fan Sound Performance Rating: Test, rate, and label in accordance with AMCA 311.

B. AMCA Certification for Fan Aerodynamic Performance Ratings: Test, rate, and label in accordance with AMCA 211.

C. AMCA Certification for Fan Energy Index (FEI): Test, rate, and label in accordance with AMCA 211.

D. Operating Limits: Classify fans in accordance with AMCA 99, Section 14.

PART 3 - EXECUTION

3.1 INSTALLATION, GENERAL

A. Install centrifugal fans level and plumb.

B. Disassemble and reassemble units, as required for moving to the final location, according to manufacturer's written instructions.

C. Lift and support units with manufacturer's designated lifting or supporting points.

D. Equipment Mounting:

1. Install floor- or roof-mounted centrifugal fans on cast-in-place concrete equipment base(s). Comply with requirements for equipment bases and foundations specified in Section 033000 "Cast-in-Place Concrete."
2. Unit Support: Install axial fans level on structural curbs. Coordinate with duct connections. Coordinate wall penetrations and flashing with wall construction. Secure units to structural support with anchor bolts.
3. Support duct-mounted and other hanging centrifugal fans directly from the building structure, using suitable hanging systems as specified in Section 230529 "Hangers and Supports for HVAC Piping and Equipment."
4. Comply with requirements for vibration isolation and seismic-control devices specified in Section 230548 "Vibration and Seismic Controls for HVAC." Refer to Structural drawings for project related seismic requirements.
5. Comply with requirements for vibration isolation devices specified in Section 230548.13 "Vibration Controls for HVAC."

E. Curb Support, Field Built-Up: Install roof curb on roof structure, level and secure, according to "The NRCA Roofing and Waterproofing Manual," detail "Equipment Support Curb," number "SPF-9" (page 1409) and detail "Equipment Support Curb," number "SPF-9S" (page 1410). Install and

secure centrifugal fans on curbs, and coordinate roof penetrations and flashing with roof construction. Secure units to curb support with anchor bolts.

F. Curb Support, Prefabricated: Rail-type wood support provided by fan manufacturer.

G. Install units with clearances for service and maintenance.

H. Label fans according to requirements specified in Section 230553 "Identification for HVAC Piping and Equipment."

3.2 DUCTWORK AND PIPING CONNECTIONS

A. Drawings indicate general arrangement of ducts and duct accessories. Make final duct connections with flexible connectors. Flexible connectors are specified in Section 233300 "Air Duct Accessories."

B. Install ducts adjacent to fans to allow service and maintenance.

C. Install piping from scroll drain connection, with trap with seal equal to 1.5 times specified static pressure, to nearest floor drain with pipe sizes matching the drain connection.

D. Install heat tracing on all drain piping subject to freezing temperature and as indicated on Drawings. Furnish and install heat tracing according to Section 230533 "Heat Tracing for HVAC Piping."

3.3 ELECTRICAL CONNECTIONS

A. Connect wiring according to Section 260519 "Low-Voltage Electrical Power Conductors and Cables."

B. Ground equipment according to Section 260526 "Grounding and Bonding for Electrical Systems."

C. Install electrical devices furnished by manufacturer, but not factory mounted, according to NFPA 70 and NECA 1.

D. Install nameplate for each electrical connection, indicating electrical equipment designation and circuit number feeding connection.

1. Nameplate shall be laminated acrylic or melamine plastic signs with a black background and engraved white letters at least 1/2 inch high.

3.4 CONTROL CONNECTIONS

A. Install control and electrical power wiring to field-mounted control devices.

B. Connect control wiring according to Section 260523 "Control-Voltage Electrical Power Cables."

3.5 STARTUP SERVICE:

A. Engage a factory-authorized service representative to perform startup service.

1. Complete installation and startup checks in accordance with manufacturer's written instructions.
2. Verify that shipping, blocking, and bracing are removed.
3. Verify that unit is secure on mountings and supporting devices and that connections to ducts and electrical components are complete. Verify that proper thermal-overload protection is installed in motors, starters, and disconnect switches.
4. Verify that cleaning and adjusting are complete.
5. For direct-drive fans, verify proper motor rotation direction and verify fan wheel free rotation and smooth bearing operation.
6. For belt-drive fans, disconnect fan drive from motor, verify proper motor rotation direction, and verify fan wheel free rotation and smooth bearing operation. Reconnect fan drive system, align and adjust belts, and install belt guards.
7. Adjust belt tension.
8. Adjust damper linkages for proper damper operation.
9. Verify lubrication for bearings and other moving parts.
10. Verify that manual and automatic volume control and fire and smoke dampers in connected ductwork systems are in fully open position.
11. Disable automatic temperature-control operators, energize motor and confirm proper motor rotation and unit operation, adjust fan to indicated rpm, and measure and record motor voltage and amperage.
12. Shut unit down and reconnect automatic temperature-control operators.
13. Remove and replace malfunctioning units and retest as specified above.

3.6 ADJUSTING

A. Adjust damper linkages for proper damper operation.

B. Adjust belt tension.

C. Lubricate bearings.

D. Comply with requirements in Section 230593 "Testing, Adjusting, and Balancing for HVAC."

3.7 CLEANING

A. After completing system installation and testing, adjusting, and balancing and after completing startup service, clean fans internally to remove foreign material and construction dirt and dust

3.8 FIELD QUALITY CONTROL

A. Manufacturer's Field Service: Engage a factory-authorized service representative to test and inspect components, assemblies, and equipment installations, including connections.

B. Prepare test and inspection reports.

3.9 DEMONSTRATION

A. Engage a factory-authorized service representative to train Owner's maintenance personnel to adjust, operate, and maintain centrifugal fans.

END OF SECTION 23 34 16

SECTION 23 37 13.13 - AIR DIFFUSERS

PART 1 - GENERAL

1.1 RELATED DOCUMENTS

A. Drawings and general provisions of the Contract, including General and Supplementary Conditions and Division 01 Specification Sections, apply to this Section.

1.2 SUMMARY

A. Section Includes:

1. Round ceiling diffusers.
2. Rectangular and square ceiling diffusers.
3. Perforated diffusers.
4. Louver face diffusers.
5. Linear bar diffusers.
6. Linear slot diffusers.
7. Ceiling-integral continuous slot diffusers.
8. Light troffer diffusers.
9. Round induction underfloor air-distribution diffusers.
10. Linear underfloor air-distribution diffuser plenums.
11. High-capacity drum louver diffusers.
12. High-capacity, modular-core supply grille diffusers.

B. Related Requirements:

1. Section 233300 "Air Duct Accessories" for fire and smoke dampers and volume-control dampers not integral to diffusers.
2. Section 233713.23 "Air Registers and Grilles" for adjustable-bar register and grilles, fixed-face registers and grilles, and linear bar grilles.
3. Section 233713.43 "Security Registers and Grilles" for security registers and security grilles.
4. Section 233716 "Fabric Air-Diffusion Devices" for continuous tubular diffusers.

1.3 ACTION SUBMITTALS

A. Product Data: For each type of product.

1. Data Sheet: Indicate materials of construction, finish, and mounting details; and performance data including throw and drop, static-pressure drop, and noise ratings.
2. Diffuser Schedule: Indicate drawing designation, room location, quantity, model number, size, and accessories furnished.

B. Samples: For each exposed product and for each color and texture specified. Actual size of smallest diffuser indicated.

1.4 INFORMATIONAL SUBMITTALS

A. Coordination Drawings: Reflected ceiling plans, drawn to scale, on which the following items are shown and coordinated with each other, using input from installers of the items involved:

1. Ceiling suspension assembly members.
2. Method of attaching hangers to building structure.
3. Size and location of initial access modules for acoustical tile.
4. Ceiling-mounted items including lighting fixtures, diffusers, grilles, speakers, sprinklers, access panels, and special moldings.
5. Duct access panels.

B. Source quality-control reports.

PART 2 - PRODUCTS

2.1 ROUND CEILING DIFFUSERS

A. Basis-of-Design Product: Subject to compliance with requirements, provide product indicated on Drawings or comparable product by one of the following:

1. Anemostat Products; a Mestek company.
2. Carnes Company.
3. Hart & Cooley Inc.
4. METALAIRE, Inc.
5. Price Industries.
6. Titus; brand of Johnson Controls International plc, Global Products.
7. Tuttle & Bailey; brand of Johnson Controls International plc, Global Products.

B. Devices shall be specifically designed for variable-air-volume flows.

C. Material: Aluminum.

D. Finish: Baked enamel, color selected by Architect.

E. Face Style: See drawings.

F. Mounting: Duct connection.

G. Pattern: Fully adjustable.

H. Dampers: Combination damper and grid.

I. Accessories: (Coordinate with unit schedules for additional requirements.)

1. Equalizing grid.
2. Plaster ring.
3. Safety chain.
4. Wire guard.
5. Sectorizing baffles.
6. Operating rod extension.

2.2 RECTANGULAR AND SQUARE CEILING DIFFUSERS

A. Basis-of-Design Product: Subject to compliance with requirements, provide product indicated on Drawings or comparable product by one of the following:

1. Anemostat Products; a Mestek company.
2. Carnes Company.
3. Hart & Cooley Inc.
4. Krueger-HVAC; brand of Johnson Controls International plc, Global Products.
5. METALAIRE, Inc.
6. Price Industries.
7. Titus; brand of Johnson Controls International plc, Global Products.
8. Tuttle & Bailey; brand of Johnson Controls International plc, Global Products.

B. Devices shall be specifically designed for variable-air-volume flows.

C. Material: Aluminum.

D. Finish: Baked enamel, color selected by Architect.

E. Face Size: See drawings.

F. Face Style: See drawings.

G. Mounting: See drawings.

H. Pattern: Adjustable.

I. Dampers: Combination damper and grid.

J. Accessories: (Coordinate with unit schedules for additional requirements.)

1. Equalizing grid.
2. Plaster ring.
3. Safety chain.
4. Wire guard.
5. Sectorizing baffles.
6. Operating rod extension.

2.3 PERFORATED DIFFUSERS

A. Basis-of-Design Product: Subject to compliance with requirements, provide product indicated on Drawings or comparable product by one of the following:

1. Anemostat Products; a Mestek company.
2. Carnes Company.
3. Hart & Cooley Inc.
4. Kees, Inc.
5. Krueger-HVAC; brand of Johnson Controls International plc, Global Products.
6. METALAIRE, Inc.
7. Price Industries.
8. Titus; brand of Johnson Controls International plc, Global Products.
9. Tuttle & Bailey; brand of Johnson Controls International plc, Global Products.

B. Devices shall be specifically designed for variable-air-volume flows.

C. Material: Steel backpan and pattern controllers, with aluminum face.

D. Finish: Baked enamel, color selected by Architect.

E. Face Size: See drawings.

F. Duct Inlet: See drawings.

G. Face Style: See drawings.

H. Mounting: See drawings.

I. Pattern Controller: See drawings.

J. Dampers: Combination damper and grid.

K. Accessories: (Coordinate with unit schedules for additional requirements.)

1. Equalizing grid.
2. Plaster ring.
3. Safety chain.
4. Wire guard.
5. Sectorizing baffles.
6. Operating rod extension.

2.4 LOUVER FACE DIFFUSERS

A. Basis-of-Design Product: Subject to compliance with requirements, provide product indicated on Drawings or comparable product by one of the following:

1. Anemostat Products; a Mestek company.
2. Carnes Company.
3. METALAIRE, Inc.
4. Price Industries.
5. Titus; brand of Johnson Controls International plc, Global Products.
6. Tuttle & Bailey; brand of Johnson Controls International plc, Global Products.

B. Devices shall be specifically designed for variable-air-volume flows.

C. Material: Aluminum.

D. Finish: Baked enamel, color selected by Architect.

E. Face Size: See drawings.

F. Mounting: See drawings.

G. Pattern: See drawings.

H. Dampers: Combination damper and grid.

I. Accessories: (Coordinate with unit schedules for additional requirements.)

1. Square to round neck adaptor.
2. Adjustable pattern vanes.
3. Throw reducing vanes.
4. Equalizing grid.
5. Plaster ring.
6. Safety chain.
7. Wire guard.
8. Sectorizing baffles.
9. Operating rod extension.

2.5 LINEAR BAR DIFFUSERS

A. Basis-of-Design Product: Subject to compliance with requirements, provide product indicated on Drawings or comparable product by one of the following:

1. Anemostat Products; a Mestek company.
2. Carnes Company.
3. Hart & Cooley Inc.
4. Krueger-HVAC; brand of Johnson Controls International plc, Global Products.
5. METALAIRE, Inc.
6. Price Industries.
7. Titus; brand of Johnson Controls International plc, Global Products.
8. Tuttle & Bailey; brand of Johnson Controls International plc, Global Products.

B. Devices shall be specifically designed for variable-air-volume flows.

C. Material: Aluminum.

D. Finish: Baked enamel, color selected by Architect.

E. Core Spacing Arrangement: See drawings.

F. Pencil-Proof Core Spacing Arrangement: See drawings.

G. One or Two-Way Deflection Vanes: Extruded construction fixed or adjustable louvers with removable core. See drawings.

H. Frame: See drawings.

I. Mounting Frame: See drawings.

J. Mounting: See drawings.

K. Damper Type: Adjustable opposed-blade assembly.

L. Accessories: (Coordinate with unit schedules for additional requirements.)

1. Plaster frame
2. Directional vanes
3. Alignment pins
4. Core clips
5. Blank-off strips.

2.6 LINEAR SLOT DIFFUSERS

A. Basis-of-Design Product: Subject to compliance with requirements, provide product indicated on Drawings or comparable product by one of the following:

1. Anemostat Products; a Mestek company.
2. Carnes Company.
3. Hart & Cooley Inc.
4. Kees, Inc.
5. Krueger-HVAC; brand of Johnson Controls International plc, Global Products.
6. METALAIRE, Inc.
7. Price Industries.
8. Titus; brand of Johnson Controls International plc, Global Products.
9. Tuttle & Bailey; brand of Johnson Controls International plc, Global Products.

B. Devices shall be specifically designed for variable-air-volume flows.

C. Material - Shell: Aluminum, insulated.

D. Material - Pattern Controller and Tees: Aluminum.

E. Finish - Face and Shell: Baked enamel, black.

F. Finish - Pattern Controller: Baked enamel, black.

G. Finish - Tees: Baked enamel, color selected by Architect.

H. Slot Width: See drawings.

I. Number of Slots: See drawings.

J. Length: See drawings.

K. Accessories: (Coordinate with unit schedules for additional requirements.)

1. Plaster frame
2. T-bar slot
3. Center notch
4. T-bar on inlet side
5. T-bar on both sides
6. T-bar clip on one side
7. T-bar clips on both sides.

2.7 CEILING-INTEGRAL CONTINUOUS DIFFUSERS

A. Basis-of-Design Product: Subject to compliance with requirements, provide product indicated on Drawings or comparable product by one of the following:

1. Anemostat Products; a Mestek company.
2. Carnes Company.
3. Hart & Cooley Inc.
4. Krueger-HVAC; brand of Johnson Controls International plc, Global Products.
5. METALAIRE, Inc.
6. Price Industries.

7. Titus; brand of Johnson Controls International plc, Global Products.
8. Tuttle & Bailey; brand of Johnson Controls International plc, Global Products.

B. Slot Width: See drawings.

C. Section Length: See drawings.

D. Straight and curved sections as required to accommodate layout.

E. Mitered tees and corners.

F. Pattern Controllers: See drawings.

G. Material: Aluminum, extruded, heavy wall.

H. Finishes:

1. Exterior: Standard white.
2. Interior: Standard black.

I. Throw: See drawings.

J. Mounting: Ceiling or Sidewall.

K. Plenum: Insulated.

L. Other Features:

1. Painted interior.
2. Blank-offs.

2.8 LIGHT TROFFER DIFFUSERS

A. Basis-of-Design Product: Subject to compliance with requirements, provide product indicated on Drawings or comparable product by one of the following:

1. Carnes Company.
2. Kees, Inc.
3. METALAIRE, Inc.
4. Price Industries.

B. Devices shall be specifically designed for variable-air-volume flows.

C. Material: Steel with external insulation.

D. Finish: Black enamel on visible surfaces.

E. Slot Width: See drawings.

F. Number of Sides: See drawings.

G. Length: See drawings.

H. Pattern: Fixed or Adjustable. See drawings.

I. Inlet: Top or Side. See drawings.

J. Inlet Size: See drawings.

2.9 ROUND INDUCTION UNDERFLOOR AIR-DISTRIBUTION DIFFUSERS

A. Basis-of-Design Product: Subject to compliance with requirements, provide product indicated on Drawings or comparable product by one of the following:

1. Krueger-HVAC; brand of Johnson Controls International plc, Global Products.
2. Price Industries.
3. Titus; brand of Johnson Controls International plc, Global Products.

B. Airflow Principle: Swirl-pattern induction.

C. Material: Plastic, high impact, and resistant to cart and foot traffic.

D. Color: Gray or Black.

E. Components:

1. Diffuser core.
2. Flow regulator.
3. Dirt and liquid catch pan.
4. Spacer flange.
5. Gasketed, underfloor compression ring.

2.10 LINEAR UNDERFLOOR AIR-DISTRIBUTION DIFFUSER PLENUMS

A. Basis-of-Design Product: Subject to compliance with requirements, provide product indicated on Drawings or comparable product by one of the following:

1. Anemostat Products; a Mestek company.
2. Carnes Company.
3. Hart & Cooley Inc.
4. Krueger-HVAC; brand of Johnson Controls International plc, Global Products.
5. METALAIRE, Inc.
6. Price Industries.
7. Titus; brand of Johnson Controls International plc, Global Products.

B. Material: Steel.

C. Finish: White baked acrylic.

D. Deflection: See drawings.

E. Components:

1. Aluminum diffuser core.
2. Diffuser frame.
3. Plenum, 0.034-inch steel.

2.11 HIGH-CAPACITY DRUM LOUVER DIFFUSERS

A. Basis-of-Design Product: Subject to compliance with requirements, provide product indicated on Drawings or comparable product by one of the following:

1. Anemostat Products; a Mestek company.
2. Carnes Company.
3. Hart & Cooley Inc.
4. Kees, Inc.
5. Krueger-HVAC; brand of Johnson Controls International plc, Global Products.
6. METALAIRE, Inc.
7. Price Industries.
8. Titus; brand of Johnson Controls International plc, Global Products.
9. Tuttle & Bailey; brand of Johnson Controls International plc, Global Products.

B. Airflow Principle: Extended distance for high airflow rates.

C. Material: Aluminum, heavy gage extruded.

D. Finish: White baked acrylic.

E. Border: 1-1/4-inch width with countersunk screw holes.

F. Gasket between drum and border.

G. Body: Drum shaped; adjustable vertically.

H. Blades: Individually adjustable horizontally.

I. Mounting: Surface to duct or wall. See drawings.

J. Inlet Width: See drawings.

K. Inlet Length: See drawings.

L. Accessories:

1. Opposed-blade steel damper.
2. Duct-mounting collars with countersunk screw holes.

2.12 HIGH-CAPACITY, MODULAR-CORE SUPPLY GRILLE DIFFUSERS

A. Basis-of-Design Product: Subject to compliance with requirements, provide product indicated on Drawings or comparable product by one of the following:

1. Anemostat Products; a Mestek company.
2. Carnes Company.
3. Hart & Cooley Inc.
4. Krueger-HVAC; brand of Johnson Controls International plc, Global Products.
5. METALAIRE, Inc.
6. Price Industries.
7. Titus; brand of Johnson Controls International plc, Global Products.
8. Tuttle & Bailey; brand of Johnson Controls International plc, Global Products.

B. Throw: Extended distance for airflow rates.

C. Material: Steel.

D. Grilles per Unit: One, Two, Three, or Four. See drawings.

E. Finish: White baked acrylic.

F. Border: 1-1/2-inch width with countersunk screw holes.

G. Blades:

1. Airfoil, individually adjustable horizontally.
2. Double deflection.
3. Set in modules.

H. Modules: Removable; rotatable.

I. Mounting: Surface.

J. Accessory: Opposed-blade steel damper.

2.13 SOURCE QUALITY CONTROL

A. Verification of Performance: Rate diffusers according to ASHRAE 70, "Method of Testing for Rating the Performance of Air Outlets and Inlets."

PART 3 - EXECUTION

3.1 EXAMINATION

A. Examine areas where diffusers are installed for compliance with requirements for installation tolerances and other conditions affecting performance of equipment.

B. Proceed with installation only after unsatisfactory conditions have been corrected.

3.2 INSTALLATION

A. Install diffusers level and plumb.

B. Ceiling-Mounted Outlets and Inlets: Drawings indicate general arrangement of ducts, fittings, and accessories. Air outlet and inlet locations have been indicated to achieve design requirements for air volume, noise criteria, airflow pattern, throw, and pressure drop. Make final locations where indicated, as much as practical. For units installed in lay-in ceiling panels, locate units in the center of panel. Where architectural features or other items conflict with installation, notify Architect for a determination of final location.

C. Install diffusers with airtight connections to ducts and to allow service and maintenance of dampers, air extractors, and fire dampers.

3.3 ADJUSTING

A. After installation, adjust diffusers to air patterns indicated, or as directed, before starting air balancing.

END OF SECTION 23 37 13.13

SECTION 23 37 13.23 - REGISTERS AND GRILLES

PART 1 - GENERAL

1.1 RELATED DOCUMENTS

A. Drawings and general provisions of the Contract, including General and Supplementary Conditions and Division 01 Specification Sections, apply to this Section.

1.2 SUMMARY

A. Section Includes:

1. Adjustable blade face registers and grilles.
2. Fixed face registers and grilles.
3. Linear bar grilles.

B. Related Requirements:

1. Section 233300 "Air Duct Accessories" for fire and smoke dampers and volume-control dampers not integral to registers and grilles.
2. Section 233713.13 "Air Diffusers" for various types of air diffusers.
3. Section 233713.43 "Security Registers and Grilles" for security registers and security grilles.
4. Section 233716 "Fabric Air-Diffusion Devices" for continuous tubular diffusers.

1.3 ACTION SUBMITTALS

A. Product Data: For each type of product.

1. Data Sheet: Indicate materials of construction, finish, and mounting details; and performance data including throw and drop, static-pressure drop, and noise ratings.
2. Register and Grille Schedule: Indicate drawing designation, room location, quantity, model number, size, and accessories furnished.

B. Samples: For each exposed product and for each color and texture specified. Smallest size register and grille indicated.

1.4 INFORMATIONAL SUBMITTALS

A. Coordination Drawings: Reflected ceiling plans, drawn to scale, on which the following items are shown and coordinated with each other, using input from installers of the items involved:

1. Ceiling suspension assembly members.
2. Method of attaching hangers to building structure.
3. Size and location of initial access modules for acoustical tile.
4. Ceiling-mounted items including lighting fixtures, diffusers, grilles, speakers, sprinklers, access panels, and special moldings.
5. Duct access panels.

B. Source quality-control reports.

PART 2 - PRODUCTS

2.1 REGISTERS

A. Adjustable Blade Face Register:

1. Basis-of-Design Product: Subject to compliance with requirements, provide product indicated on Drawings or comparable product by one of the following:

   a. Anemostat Products; a Mestek company.
   b. Hart & Cooley Inc.
   c. Kees, Inc.
   d. Krueger-HVAC; brand of Johnson Controls International plc, Global Products.
   e. METALAIRE, Inc.
   f. Price Industries.
   g. Titus; brand of Johnson Controls International plc, Global Products.
   h. Tuttle & Bailey; brand of Johnson Controls International plc, Global Products.

2. Material: Aluminum.
3. Finish: Baked enamel, color selected by Architect.
4. Face Blade Arrangement: See drawings.
5. Core Construction: Integral or Removable. See drawings.
6. Rear-Blade Arrangement: See drawings.
7. Frame: See drawings.
8. Mounting Frame: See drawings.
9. Mounting: See drawings.
10. Damper Type: Adjustable opposed blade.
11. Accessories:

    a. Front or Rear-blade gang operator.
    b. Filter.

B. Fixed Face Register:

1. Basis-of-Design Product: Subject to compliance with requirements, provide product indicated on Drawings or comparable product by one of the following:

   a. Anemostat Products; a Mestek company.
   b. Hart & Cooley Inc.
   c. Kees, Inc.
   d. Krueger-HVAC; brand of Johnson Controls International plc, Global Products.
   e. Price Industries.
   f. Titus; brand of Johnson Controls International plc, Global Products.
   g. Tuttle & Bailey; brand of Johnson Controls International plc, Global Products.

2. Material: Aluminum.
3. Finish: Baked enamel, color selected by Architect.
4. Face Blade Arrangement: See drawings.
5. Face Arrangement: See drawings.
6. Core Construction: Integral or Removable. See drawings
7. Frame: See drawings.

8. Mounting Frame: See drawings.
9. Mounting: See drawings.
10. Damper Type: Adjustable opposed blade.
11. Accessory: Filter.

2.2 GRILLES

A. Adjustable Blade Face Grille:

1. Basis-of-Design Product: Subject to compliance with requirements, provide product indicated on Drawings or comparable product by one of the following:

   a. Anemostat Products; a Mestek company.
   b. Hart & Cooley Inc.
   c. Kees, Inc.
   d. Krueger-HVAC; brand of Johnson Controls International plc, Global Products.
   e. METALAIRE, Inc.
   f. Price Industries.
   g. Titus; brand of Johnson Controls International plc, Global Products.
   h. Tuttle & Bailey; brand of Johnson Controls International plc, Global Products.

2. Material: Aluminum.
3. Finish: Baked enamel, color selected by Architect.
4. Face Blade Arrangement: See drawings.
5. Core Construction: Integral or Removable. See drawings.
6. Rear-Blade Arrangement: See drawings.
7. Frame: See drawings.
8. Mounting Frame: See drawings.
9. Mounting: See drawings.
10. Accessories:

    a. Front or Rear-blade gang operator. See drawings.
    b. Filter.

B. Fixed Face Grille:

1. Basis-of-Design Product: Subject to compliance with requirements, provide product indicated on Drawings or comparable product by one of the following:

   a. Anemostat Products; a Mestek company.
   b. Hart & Cooley Inc.
   c. Kees, Inc.
   d. Krueger-HVAC; brand of Johnson Controls International plc, Global Products.
   e. Price Industries.
   f. Titus; brand of Johnson Controls International plc, Global Products.
   g. Tuttle & Bailey; brand of Johnson Controls International plc, Global Products.

2. Material: Aluminum.
3. Finish: Baked enamel, color selected by Architect.
4. Face Blade Arrangement: See drawings.
5. Face Arrangement: See drawings.
6. Core Construction: Integral or Removable. See drawings.
7. Frame: See drawings.
8. Mounting Frame: See drawings.

9. Mounting: See drawings.
10. Accessory: Filter. See drawings.

C. Linear Bar Grilles

1. Basis-of-Design Product: Subject to compliance with requirements, provide product indicated on Drawings or comparable product by one of the following:

   a. Anemostat Products; a Mestek company.
   b. Hart & Cooley Inc.
   c. Kees, Inc.
   d. Krueger-HVAC; brand of Johnson Controls International plc, Global Products.
   e. Price Industries.
   f. Titus; brand of Johnson Controls International plc, Global Products.
   g. Tuttle & Bailey; brand of Johnson Controls International plc, Global Products.

2. Material: Aluminum.
3. Finish: Baked enamel, color selected by Architect.
4. Face Blade Arrangement: See drawings.
5. Face Arrangement: See drawings.
6. Core Construction: Integral or Removable. See drawings.
7. Distribution plenum.

   a. Internal insulation.
   b. Inlet damper.

8. Frame: See drawings.
9. Mounting Frame: See drawings.
10. Mounting: See drawings.
11. Damper Type: Adjustable opposed blade.

2.3 SOURCE QUALITY CONTROL

A. Verification of Performance: Rate registers and grilles according to ASHRAE 70, "Method of Testing for Rating the Performance of Air Outlets and Inlets."

PART 3 - EXECUTION

3.1 EXAMINATION

A. Examine areas where registers and grilles are installed for compliance with requirements for installation tolerances and other conditions affecting performance of equipment.

B. Proceed with installation only after unsatisfactory conditions have been corrected.

3.2 INSTALLATION

A. Install registers and grilles level and plumb.

B. Outlets and Inlets Locations: Drawings indicate general arrangement of ducts, fittings, and accessories. Air outlet and inlet locations have been indicated to achieve design requirements for

air volume, noise criteria, airflow pattern, throw, and pressure drop. Make final locations where indicated, as much as practical. For units installed in lay-in ceiling panels, locate units in the center of panel. Where architectural features or other items conflict with installation, notify Architect for a determination of final location.

C. Install registers and grilles with airtight connections to ducts and to allow service and maintenance of dampers, air extractors, and fire dampers.

3.3 ADJUSTING

A. After installation, adjust registers and grilles to air patterns indicated, or as directed, before starting air balancing.

END OF SECTION 23 37 13.23

SECTION 23 41 00 - PARTICULATE AIR FILTRATION

PART 1 - GENERAL

1.1 SUMMARY

A. Section Includes:

1. Metal panel filters.
2. Flat panel filters.
3. Pleated panel filters.
4. Supported bag filters.
5. V-bank cell filters.
6. Front- or back-access filter frames.
7. Side-access filter housings.
8. Filter gauges.

B. Related Requirements:

1. Section 233119 "HVAC Casings" for customized housings used for particulate air filters.
2. Section 233416 "Centrifugal HVAC Fans" for customized fan and filter units.
3. Section 234133 "High-Efficiency Particulate Air Filtration" for HEPA filters used in combination with particulate air filters.
4. Section 234300 "Electronic Air Cleaners" for electronic units combined with particulate filters as part of a system.

1.2 DEFINITIONS

A. HIPS: High-impact polystyrene.

1.3 ACTION SUBMITTALS

A. Product Data: For each type of product. Include dimensions; operating characteristics; required clearances and access; rated flow capacity, including initial and final pressure drop at rated airflow; efficiency and test method; fire classification; furnished specialties; and accessories for each model indicated.

B. Sustainable Design Submittals:

1. Product data showing compliance with ASHRAE 62.1.

C. Shop Drawings: For air filters. Include plans, elevations, sections, details, and attachments to other work.

1. Show filter rack assembly, dimensions, materials, and methods of assembly of components.
2. Include setting drawings, templates, and requirements for installing anchor bolts and anchorages.

1.4 INFORMATIONAL SUBMITTALS

A. Seismic Qualification Data: Certificates, for filters, accessories, and components from manufacturer.

1. Basis for Certification: Indicate whether withstand certification is based on actual test of assembled components or on calculation.
2. Dimensioned Outline Drawings of Equipment Unit: Identify center of gravity and locate and describe mounting and anchorage provisions.
3. Detailed description of equipment anchorage devices on which the certification is based and their installation requirements.

B. Product Test Reports: For each filter, for tests performed by a qualified testing agency.

C. Field quality-control reports.

1.5 CLOSEOUT SUBMITTALS

A. Operation and Maintenance Data: For each type of filter and rack to include in emergency, operation, and maintenance manuals.

1.6 MAINTENANCE MATERIAL SUBMITTALS

A. Furnish extra materials that match products installed and that are packaged with protective covering for storage and identified with labels describing contents.

1. Provide one complete set(s) of filters for each filter bank. If system includes prefilters, provide only prefilters.
2. Provide one container(s) of red oil for inclined manometer filter gauge.

1.7 QUALITY ASSURANCE

A. Testing Agency Qualifications: An NRTL.

1.8 DELIVERY, STORAGE, AND HANDLING

A. Deliver and store products in a clean, dry place.

B. Comply with manufacturer's written rigging and installation instructions for unloading and moving to final installed location.

C. Handle products carefully to prevent damage, breaking, denting, and scoring. Do not install damaged products.

D. Protect products from weather, dirt, dust, water, construction debris, and physical damage.

1. Retain factory-applied coverings on equipment to protect finishes during construction and remove just prior to operating unit.
2. Cover unit openings before installation to prevent dirt and dust from entering inside of units. If required to remover coverings during unit installation, reapply coverings over openings after unit installation and remove just prior to operating unit.

3. Replace installed products damaged during construction.

PART 2 - PRODUCTS

2.1 PERFORMANCE REQUIREMENTS

A. Seismic Performance: Filters shall withstand the effects of earthquake motions determined according to ASCE/SEI 7.

1. The term "withstand" means "the unit will remain in place without separation of any parts when subjected to the seismic forces specified and the unit will be fully operational after the seismic event."

B. ASHRAE Compliance:

1. Comply with applicable requirements in ASHRAE 62.1, Section 4 - "Outdoor Air Quality"; Section 5 - "Systems and Equipment"; and Section 7 - "Construction and Startup."
2. Comply with ASHRAE 52.2 for MERV for methods of testing and rating air-filter units.

C. Comply with NFPA 90A and NFPA 90B.

D. Comply with UL 900.

E. Electrical Components, Devices, and Accessories: Listed and labeled as defined in NFPA 70, by a qualified testing agency, and marked for intended location and application.

2.2 METAL PANEL FILTERS

A. Description: Factory-fabricated, self-supported, cleanable, all-metal, impingement-type, panel-type, permanent air filters with holding frames.

B. Manufacturers: Subject to compliance with requirements, available manufacturers offering products that may be incorporated into the Work include, but are not limited to, the following:

1. AAF International
2. Camfil Farr Inc.
3. Columbus Industries, Inc
4. Filtration Group
5. Koch Filter Corporation
6. Parker Hannifin Corporation; HVAC Filtration Division
7. Tri-Dim Filter Corporation

C. Source Limitations: Obtain from single source from single manufacturer.

D. Media: Minimum of four alternate layers of aluminum flat and herringbone or serpentine-crimp mesh screen.

1. Non-oiled for grease removal application.
2. Adhesive coating.

E. Filter-Media Frame: Aluminum, hinged, and with pull and retaining handles fastened to the media.

1. Drain holes.

F. Efficiency: Minimum 90 percent efficiency on particles 10 microns and larger.

2.3 FLAT PANEL FILTERS

A. Description: Factory-fabricated, self-supported, flat, nonpleated, panel-type, disposable air filters with holding frames.

B. Manufacturers: Subject to compliance with requirements, available manufacturers offering products that may be incorporated into the Work include, but are not limited to, the following:

1. AAF International
2. Columbus Industries, Inc
3. Flanders Corporation
4. Glasfloss Industries
5. Koch Filter Corporation
6. Parker Hannifin Corporation; HVAC Filtration Division
7. Tri-Dim Filter Corporation

C. Source Limitations: Obtain from single source from single manufacturer.

D. Media: Interlaced glass or, Cotton and synthetic fibers coated with nonflammable adhesive.

1. Media shall be coated with an antimicrobial agent.
2. Metal Retainer: Upstream side and downstream side.

E. Filter-Media Frame: Galvanized steel with metal grid on outlet side and steel rod grid on inlet side, hinged, with pull and retaining handles sealed or bonded to the media.

2.4 PLEATED PANEL FILTERS

A. Description: Factory-fabricated, self-supported, extended-surface, pleated, panel-type, disposable air filters with holding frames.

B. Manufacturers: Subject to compliance with requirements, available manufacturers offering products that may be incorporated into the Work include, but are not limited to, the following:

1. 3M
2. AAF International
3. Air-Nu
4. Camfil Farr Inc.
5. Columbus Industries, Inc
6. Filtration Group
7. Flanders Corporation
8. Glasfloss Industries
9. Koch Filter Corporation
10. Parker Hannifin Corporation; HVAC Filtration Division
11. Tri-Dim Filter Corporation

C. Source Limitations: Obtain from single source from single manufacturer.

D. Media: Interlaced glass or, Cotton and synthetic fibers coated with nonflammable adhesive.

1. Separators shall be bonded to the media to maintain pleat configuration.
2. Welded-wire grid shall be on downstream side to maintain pleat.
3. Media shall be bonded to frame to prevent air bypass.
4. Support members on upstream and downstream sides to maintain pleat spacing.

E. Filter-Media Frame: Cardboard frame with perforated metal retainer,with metal grid on outlet side and steel rod grid on inlet side, hinged, with pull and retaining handles sealed or bonded to the media.

2.5 SUPPORTED BAG FILTERS

A. Description: Factory-fabricated, dry, extended surface, self-supported filters with holding frames in steel, basket-type retainer, internal metal grid retainer, or self-supporting media pockets.

B. Manufacturers: Subject to compliance with requirements, available manufacturers offering products that may be incorporated into the Work include, but are not limited to, the following:

1. AAF International
2. Air-Nu
3. Camfil Farr Inc.
4. Columbus Industries, Inc
5. Filtration Group
6. Glasfloss Industries
7. Koch Filter Corporation
8. Parker Hannifin Corporation; HVAC Filtration Division
9. Tri-Dim Filter Corporation

C. Source Limitations: Obtain from single source from single manufacturer.

D. Media: Fibrous material constructed so individual pleats are maintained in tapered form under rated-airflow conditions by flexible internal supports.

E. Filter-Media Frame: Galvanized steel.

2.6 V-BANK CELL FILTERS

A. Description: Factory-fabricated, adhesive-coated, disposable, packaged air filters with media angled to airflow, and with holding frames.

B. Manufacturers: Subject to compliance with requirements, available manufacturers offering products that may be incorporated into the Work include, but are not limited to, the following:

1. 3M
2. AAF International
3. Camfil Farr Inc.
4. Columbus Industries, Inc
5. Flanders Corporation
6. Glasfloss Industries
7. Koch Filter Corporation
8. Parker Hannifin Corporation; HVAC Filtration Division
9. Tri-Dim Filter Corporation

C. Source Limitations: Obtain from single source from single manufacturer.

D. Media: Fibrous material constructed so individual mini-pleats are maintained in tapered form under rated-airflow conditions by flexible internal supports.

E. Filter-Media Frames: HIPS.

2.7 FRONT- OR BACK-ACCESS FILTER FRAMES

A. Description: Galvanized-steel framing members with access for either upstream (front) or downstream (back) filter servicing, cut to size and prepunched for assembly into modules. Vertically support filters to prevent deflection of horizontal members without interfering with filter installation or operation.

B. Manufacturers: Subject to compliance with requirements, available manufacturers offering products that may be incorporated into the Work include, but are not limited to, the following:

1. AAF International
2. Flanders Corporation
3. Koch Filter Corporation
4. Parker Hannifin Corporation; HVAC Filtration Division

C. Source Limitations: Obtain from single source from single manufacturer.

D. Prefilters: Incorporate a separate track with spring clips, removable from front or back.

E. Sealing: Factory-installed, positive-sealing device for each row of filters, to ensure seal between gasketed filter elements and to prevent bypass of unfiltered air.

2.8 SIDE-ACCESS FILTER HOUSINGS

A. Description: Factory-assembled, side-service housings, constructed of galvanized steel, with flanges to connect to duct or casing system.

B. Manufacturers: Subject to compliance with requirements, available manufacturers offering products that may be incorporated into the Work include, but are not limited to, the following:

1. AAF International
2. Camfil Farr Inc.
3. Flanders Corporation
4. Koch Filter Corporation
5. Parker Hannifin Corporation; HVAC Filtration Division

C. Source Limitations: Obtain from single source from single manufacturer.

D. Prefilters: Integral tracks to accommodate 2-inch- thick, disposable filters.

E. Access Doors: Hinged, with continuous gaskets on perimeter and positive-locking devices, and arranged so filter cartridges can be loaded from either access door.

F. Sealing: Incorporate positive-sealing gasket material on channels to seal top and bottom of filter cartridge frames and to prevent bypass of unfiltered air.

2.9 FILTER GAUGES

A. Diaphragm-type gauge with dial and pointer in metal case, vent valves, black figures on white background, and front recalibration adjustment.

B. Manufacturers: Subject to compliance with requirements, available manufacturers offering products that may be incorporated into the Work include, but are not limited to, the following:

1. Dwyer Instruments, Inc
2. Parker Hannifin Corporation; HVAC Filtration Division

C. Source Limitations: Obtain from single source from single manufacturer.

1. Diameter: 4-1/2 inches.
2. Scale Range for Filter Media Having a Recommended Final Resistance of 0.5-Inch wg or Less: 0- to 0.5-inch wg.
3. Scale Range for Filter Media Having a Recommended Final Resistance of 0.5- to 1.0-Inch wg or Less: 0- to 1.0-inch wg.
4. Scale Range for Filter Media Having a Recommended Final Resistance of 1.0- to 2.0-Inch wg or Less: 0- to 2.0-inch wg.
5. Scale Range for Filter Media Having a Recommended Final Resistance of 2.0- to 3.0-Inch wg or Less: 0- to 3.0-inch wg.
6. Scale Range for Filter Media Having a Recommended Final Resistance of 3.0- to 4.0-Inch wg or Less: 0- to 4.0-inch wg.

D. Manometer-Type Filter Gauge: Molded plastic, with epoxy-coated aluminum scale and logarithmic-curve tube gage with integral leveling gage, graduated to read from 0- to 3.0-inch wg, and accurate within 3 percent of the full-scale range.

E. Accessories: Static-pressure tips, tubing, gauge connections, and mounting bracket.

PART 3 - EXECUTION

3.1 EXAMINATION

A. Examine ducts, air-handling units, and conditions for compliance with requirements for installation tolerances and other conditions affecting performance of the Work.

B. Proceed with installation only after unsatisfactory conditions have been corrected.

3.2 INSTALLATION OF FILTERS

A. Position each filter unit with clearance for normal service and maintenance. Anchor filter holding frames to substrate.

B. Install filters in position to prevent passage of unfiltered air.

C. Install filter gauge for each filter bank.

D. Do not operate fan system until filters (temporary or permanent) are in place. Replace temporary filters used during construction and testing with new, clean filters.

E. Coordinate filter installations with duct and air-handling-unit installations.

3.3 INSTALLATION OF FILTER GAUGES

A. Install filter gauge for each filter bank.

B. Install filter-gauge, static-pressure tips upstream and downstream from filters. Install filter gauges on filter banks with separate static-pressure taps upstream and downstream from filters. Mount filter gauges on outside of filter housing or filter plenum in an accessible position. Adjust and level inclined gauges.

3.4 CONTROL CONNECTIONS

A. Install control and electrical power wiring to field-mounted control devices.

B. Connect control wiring between pressure sensors and DDC system.

C. Connect control wiring between controlled devices.

D. Connect control wiring according to Section 260523 "Control-Voltage Electrical Power Cables."

3.5 FIELD QUALITY CONTROL

A. Testing Agency:

B. Manufacturer's Field Service: Engage a factory-authorized service representative to test and inspect components, assemblies, and equipment installations, including connections.

C. Perform tests and inspections with the assistance of a factory-authorized service representative.

D. Tests and Inspections:

1. Test for leakage of unfiltered air while system is operating.

E. Air filter will be considered defective if it does not pass tests and inspections.

F. Prepare test and inspection reports.

3.6 CLEANING

A. After completing system installation and testing, adjusting, and balancing of air-handling and air-distribution systems, clean filter housings and install new filter media.

END OF SECTION 23 41 00

SECTION 23 74 16.13 - PACKAGED, LARGE-CAPACITY, ROOFTOP AIR-CONDITIONING UNITS

PART 1 - GENERAL

1.1 RELATED DOCUMENTS

A. Drawings and general provisions of the Contract, including General and Supplementary Conditions and Division 01 Specification Sections, apply to this Section.

1.2 SUMMARY

A. Section includes packaged, large-capacity, rooftop air conditioning units (RTUs) with the following components:

1. Casings.
2. Fans, drives, and motors.
3. Rotary heat exchanger.
4. Coils.
5. Refrigerant circuit components.
6. Air filtration.
7. Gas furnaces.
8. UV germicidal irradiation section.
9. Sound-attenuator section.
10. Dampers.
11. Electrical power connections.
12. Controls.
13. Roof curbs.
14. Accessories.

1.3 DEFINITIONS

A. RTU: Rooftop unit. As used in this Section, this abbreviation means packaged, large-capacity, rooftop air-conditioning units. This abbreviation is used regardless of whether the unit is mounted on the roof or on a concrete base on ground.

1.4 ACTION SUBMITTALS

A. Product Data: For each RTU.

1. Include construction details, material descriptions, dimensions of individual components and profiles, and finishes.
2. Include rated capacities, dimensions, required clearances, characteristics, furnished specialties, and accessories.
3. Include unit dimensions and weight.
4. Include cabinet material, metal thickness, finishes, insulation, and accessories.
5. Fans:

    a. Include certified fan-performance curves with system operating conditions indicated.

b. Include certified fan-sound power ratings.
c. Include fan construction and accessories.
d. Include motor ratings, electrical characteristics, and motor accessories.

6. Include certified coil-performance ratings with system operating conditions indicated.
7. Include filters with performance characteristics.
8. Include gas furnaces with performance characteristics.
9. Include factory selection calculations for each antimicrobial ultraviolet lamp installation.
10. Include dampers, including housings, linkages, and operators.

B. Sustainable Design Submittals:

1. Product data showing compliance with ASHRAE 62.1.
2. Product Data: For air filtration performance.
3. Product Data: For adhesives, mastics, and sealants, indicating VOC content.
4. Laboratory Test Reports: For adhesives, mastics, and sealants, indicating compliance with requirements for low-emitting materials.
5. Product Data: For energy performance.
6. Product Data: For refrigerants, indicating compliance with refrigerant management practices.

C. Shop Drawings: For each packaged, rooftop air-conditioning units.

1. Include plans, elevations, sections, and mounting and attachment details.
2. Include details of equipment assemblies. Indicate dimensions, weights, loads, required clearances, method of field assembly, components, and location and size of each field connection.
3. Include diagrams for power, signal, and control wiring.

D. Delegated-Design Submittal: For RTU supports indicated to comply with performance requirements and design criteria, including analysis data signed and sealed by the qualified professional engineer responsible for their preparation.

1. Include design calculations for selecting vibration isolators and seismic restraints and for designing vibration isolation bases.
2. Detail mounting, securing, and flashing of roof curb to roof structure. Indicate coordinating requirements with roof membrane system.
3. Wind- and Seismic-Restraint Details: Detail fabrication and attachment of wind and seismic restraints and snubbers. Show anchorage details and indicate quantity, diameter, and depth of penetration of anchors.

1.5 INFORMATIONAL SUBMITTALS

A. Coordination Drawings: Floor plans and other details, or BIM model, drawn to scale, showing the items described in this Section, and coordinated with all building trades.

B. Sample Warranty: For manufacturer's warranty.

C. Seismic Qualification Data: Certificates, for RTUs, accessories, and components, from manufacturer.

1. Basis for Certification: Indicate whether withstand certification is based on actual test of assembled components or on calculation.

2. Dimensioned Outline Drawings of Equipment Unit: Identify center of gravity and locate and describe mounting and anchorage provisions.
3. Detailed description of equipment anchorage devices on which the certification is based and their installation requirements.
4. Restraint of internal components.

D. Product Certificates: Submit certification that specified equipment will withstand wind forces identified in "Performance Requirements" Article and in Section 230548 "Vibration and Seismic Controls for HVAC."

1. Basis for Certification: Indicate whether withstand certification is based on actual test of assembled components or on calculations.
2. Dimensioned Outline Drawings of Equipment Unit: Identify center of wind force and locate and describe mounting and anchorage provisions.
3. Detailed description of equipment anchorage devices on which the certification is based and their installation requirements.

E. Source quality-control reports.

F. System startup reports.

G. Field quality-control reports.

1.6 CLOSEOUT SUBMITTALS

A. Operation and Maintenance Data: For RTUs to include in emergency, operation, and maintenance manuals.

1.7 MAINTENANCE MATERIAL SUBMITTALS

A. Furnish extra materials described below that match products installed and that are packaged with protective covering for storage and identified with labels describing contents.

1. Filters: One set(s) of filters for each unit.
2. Gaskets: One set(s) for each access door.
3. Fan Belts: One set(s) for each belt-driven fan.

1.8 WARRANTY

A. Warranty: Manufacturer agrees to repair or replace components of outdoor, semi-custom, air-handling unit that fail in materials or workmanship within specified warranty period.

1. Warranty Period: 5 year(s) from date of Substantial Completion.
2. Warranty Period for Heat Exchangers: Manufacturer's standard, but not less than 5 years from date of Substantial Completion

PART 2 - PRODUCTS

2.1 PERFORMANCE REQUIREMENTS

A. Electrical Components, Devices, and Accessories: Listed and labeled as defined in NFPA 70, by an NRTL, and marked for intended location and application.

B. NFPA Compliance: Comply with NFPA 90A for design, fabrication, and installation of RTUs and components.

C. ASHRAE 62.1 Compliance: Applicable requirements in ASHRAE 62.1, Section 5 - "Systems and Equipment" and Section 7 - "Construction and Startup."

D. ASHRAE 15 Compliance: For refrigeration system safety.

E. ASHRAE/IES 90.1 Compliance: Applicable requirements in ASHRAE/IES 90.1, Section 6 - "Heating, Ventilating, and Air-Conditioning."

F. UL Compliance: Comply with UL 1995.

G. Delegated Design: Engage a qualified professional engineer, as defined in Section 014000 "Quality Requirements," to design mounting and restraints for RTUs, including comprehensive engineering analysis.

1. Design RTU supports to comply with wind and seismic performance requirements.

H. Wind-Restraint Performance:

1. Design equipment and supports to withstand wind loads of governing code and ASCE/SEI 7.
2. Minimum 10 lb/sq. ft. multiplied by the maximum area of the mechanical component projected on a vertical plane that is normal to the wind direction, and 45 degrees either side of normal.

I. Seismic Performance: RTUs shall withstand the effects of earthquake motions determined according to ASCE/SEI 7.

1. The term "withstand" means "the unit will remain in place without separation of any parts when subjected to the seismic forces specified" and the unit will be fully operational after the seismic event.
2. Component Importance Factor: Refer to Structural drawings for project related information.
3. Component Amplification Factor and Component Response Modification Factor: Refer to Structural drawings for project related information.

2.2 MANUFACTURERS

A. Basis-of-Design Product: Subject to compliance with requirements, provide product indicated on Drawings or comparable product by one of the following:

1. AAON.
2. Carrier Global Corporation.
3. Daikin Applied.
4. Lennox Industries, Inc.; Lennox International.
5. Trane.
6. YORK; brand of Johnson Controls International plc, Building Solutions North America.

2.3 UNIT CASINGS

A. General Fabrication Requirements for Casings: Formed and reinforced double-wall insulated panels, fabricated to allow removal for access to internal parts and components, with joints between sections sealed.

B. Double-Wall Construction:

1. Outside Casing Wall: Galvanized steel, minimum 18 gauge thick with corrosion-resistant coating, with pitched roof panels and knockouts with grommet seals for electrical and piping connections and lifting lugs.
2. Inside Casing Wall: G90-coated galvanized steel, 0.034 inch thick.
3. Floor Plate: G90 galvanized steel, treadplate, minimum 18 gauge thick.
4. Casing Insulation:

a. Materials: Injected polyurethane foam insulation.
b. Casing Panel R-Value: Minimum 12.
c. Insulation Thickness: 2 inches.
d. Thermal Break: Provide continuity of insulation with no through-casing metal in casing walls, floors, or roof of unit.

C. Airstream Surfaces: Surfaces in contact with airstream shall comply with requirements in ASHRAE 62.1.

D. Static-Pressure Classifications:

1. For Unit Sections Upstream of Fans: Minus 3-inch wg.
2. For Unit Sections Downstream and Including Fans: 4-inch wg.

E. Panels and Doors:

1. Panels:

a. Fabrication: Formed and reinforced with same materials and insulation thickness as casing.
b. Fasteners: Two or more camlock type for panel lift-out operation. Arrangement shall allow panels to be opened against air-pressure differential.
c. Gasket: Neoprene, applied around entire perimeters of panel frames.
d. Size: Large enough to allow inspection and maintenance of air-handling unit's internal components. Dimensions to be at least 24 inches wide by full height of unit casing up to a maximum height of 72 inches.

2. Access Doors:

a. Hinges: A minimum of two ball-bearing hinges or stainless steel piano hinge and two wedge-lever-type latches, operable from inside and outside. Arrange doors to be opened against air-pressure differential.
b. Gasket: Neoprene, applied around entire perimeters of panel frames.
c. Size: Large enough to allow inspection and maintenance of air-handling unit's internal components. Dimensions to be at least 24 inches wide by full height of unit casing up to a maximum height of 72 inches.

3. Locations and Applications:

   a. Fan Section: Doors and inspection and access panels.
   b. Access Section: Doors.
   c. Coil Section: Inspection and access panels.
   d. Damper Section: Doors.
   e. Filter Section: Doors large enough to allow periodic removal and installation of filters.
   f. Mixing Section: Doors.

4. Service Light: 100-W vaporproof fixture with switched junction box located outside adjacent to door.

   a. Locations: Each section accessed with door.

F. Condensate Drain Pans:

1. Location: Each type of cooling coil.
2. Construction:

   a. Double-wall, stainless steel sheet with space between walls filled with foam insulation and moisture-tight seal.

3. Drain Connection:

   a. Located at lowest point of pan and sized to prevent overflow. Terminate with threaded nipple on both ends of pan.
   b. Minimum Connection Size: NPS 1.

4. Slope: Minimum slope, to comply with ASHRAE 62.1, in at least two planes to collect condensate from cooling coils (including coil piping connections, coil headers, and return bends) and from humidifiers and to direct water toward drain connection.
5. Length: Extend drain pan downstream from leaving face for distance to comply with ASHRAE 62.1.
6. Width: Entire width of water producing device.
7. Depth: A minimum of 2 inches deep.
8. Units with stacked coils shall have an intermediate drain pan to collect condensate from top coil.

2.4 FANS, DRIVES, AND MOTORS

A. Fan and Drive Assemblies: Statically and dynamically balanced and designed for continuous operation at maximum-rated fan speed and motor horsepower.

B. Supply-Air Fans: Centrifugal, rated according to AMCA 210; galvanized or painted steel; mounted on solid-steel shaft.

1. Shafts: With field-adjustable alignment.

   a. Turned, ground, and polished hot-rolled steel with keyway.

2. Shaft Bearings:

a. Heavy-duty, self-aligning, pillow-block type with an L-50 rated life of minimum 200,000 hours according to ABMA 9.

3. Housings: Formed- and reinforced-steel panels to form curved scroll housings with shaped cutoff and spun-metal inlet bell.

a. Bracing: Steel angle or channel supports for mounting and supporting fan scroll, wheel, motor, and accessories.

4. Centrifugal Fan Wheels: Inlet flange, backplate, and shallow blades with inlet and tip curved forward in direction of airflow and mechanically fastened to flange and backplate; steel or aluminum hub swaged to backplate and fastened to shaft with setscrews.
5. Mounting: For internal vibration isolation and seismic control. Factory-mount fans with manufacturer's standard restrained vibration isolation mounting devices having a minimum static deflection of 1 inch.
6. Shaft Lubrication Lines: Extended to a location outside the casing.
7. Flexible Connector: Factory fabricated with a fabric strip minimum 3-1/2 inches wide, attached to two strips of minimum 2-3/4-inch-wide by 0.028-inch-thick, galvanized-steel sheet.

a. Flexible Connector Fabric: Glass fabric, double coated with neoprene. Fabrics, coatings, and adhesives shall comply with UL 181, Class 1.

C. Drives, Direct: Factory-mounted, direct drive.

D. Drives, Belt: Factory-mounted, V-belt drive, with adjustable alignment and belt tensioning, and with 1.5 service factor based on fan motor.

1. Pulleys: Cast iron or cast steel with split, tapered bushing, dynamically balanced at the factory.
2. Belts: Oil resistant, non-sparking and nonstatic; in matched sets for multiple-belt drives.
3. Belt Guards: Comply with requirements specified by OSHA and fabricate according to SMACNA's "HVAC Duct Construction Standards"; 0.146-inch- thick, 3/4-inch diamond-mesh wire screen, welded to steel angle frame; prime coated.

E. Condenser-Coil Fan: Variable-speed propeller, mounted on shaft of permanently lubricated ECM motors.

F. Relief-Air Fan: Propeller, Forward curved, or Backward inclined, shaft mounted on permanently lubricated motor.

G. Motors:

1. Comply with NEMA designation, temperature rating, service factor, and efficiency requirements for motors specified in Section 230513 "Common Motor Requirements for HVAC Equipment."
2. Motor Sizes: Minimum size as indicated. If not indicated, large enough so driven load will not require motor to operate in service factor range above 1.0.
3. Enclosure Type: Open, dripproof or Totally enclosed, fan cooled.
4. Enclosure Materials: Cast iron.
5. Efficiency: Premium efficient as defined in NEMA MG 1.
6. Motor Pulleys: Adjustable pitch for use with 5-hp motors and smaller; fixed pitch for use with motors larger than 5 hp. Select pulley size so pitch adjustment is at the middle of adjustment range at fan design conditions.

7. Controllers, Electrical Devices, and Wiring: Comply with requirements for electrical devices and connections specified in electrical Sections.

H. Comply with Section 262923 "Variable-Frequency Motor Controllers."

2.5 ROTARY HEAT EXCHANGERS

A. Casing:

1. Galvanized steel, stainless steel, or aluminum with manufacturer's standard factory finish.
2. Integral purge section limiting carryover of exhaust air to between 0.05 percent at 1.6-inch wg and 0.20 percent at 4-inch wg differential pressure.
3. Casing seals on periphery of rotor, on duct divider, and on purge section.
4. Support vertical rotors on grease-lubricated ball bearings with extended grease fittings. Mount horizontal rotors on tapered roller bearing.

B. Rotor - Aluminum, Metallic, or Polymer: Aluminum, metallic, or polymer segmented wheel, strengthened with radial spokes impregnated with nonmigrating, water-selective, 3-angstrom molecular-sieve desiccant coating.

C. Drive: Fractional horsepower motor and gear reducer, with speed changed by variable-frequency controller. Permanently lubricated wheel bearings with an L-10 400,000 hours.

D. Controls:

1. Starting relay, factory mounted and wired, and manual motor starter for field wiring.
2. Variable-frequency controller, factory mounted and wired, with exhaust- and outdoor-air sensors, automatic changeover thermostat and set-point adjuster, to vary rotor speed and maintain exhaust temperature above freezing and air differential temperature above set point. Provide maximum rotor speed when exhaust-air temperature is less than outdoor-air temperature.
3. Control energy recovery to permit air economizer operation.

   a. Bypass dampers to assist energy recovery control.

4. Pilot-Light Indicator: Display rotor rotation and speed.
5. Speed Settings: Adjustable settings for maximum and minimum rotor speed limits.
6. Integral purge section limiting carryover of exhaust air to between 0.05 percent at 1.6-inch wg and 0.20 percent at 4-inch wg differential pressure.

2.6 COILS

A. General Requirements for Coils:

1. Comply with AHRI 410.
2. Fabricate coils section to allow removal and replacement of coil for maintenance and to allow in-place access for service and maintenance of coil(s).
3. Coils shall not act as structural component of unit.

B. Supply-Air Refrigerant Coil:

1. Tubes: Copper.
2. Fins:

a. Material: Aluminum.
b. Fin Spacing: As required to meet performance.

3. Fin and Tube Joints: Mechanical bond or Silver brazed.
4. Headers: Seamless-copper headers with brazed connections.
5. Frames: Galvanized steel.
6. Coatings: Corrosion-resistant coating, where noted on the contract documents.
7. Ratings: Designed, tested, and rated according to ASHRAE 33 and AHRI 410.

a. Working Pressure: Minimum 300 psig.

C. Supply-Air Hydronic Heating Coil:

1. Hot-Water Coils:

a. Piping Connections: Threaded or Flanged, same end of coil.
b. Tube Material: Copper.
c. Fin Type: Plate.
d. Fin Material: Aluminum.
e. Fin Spacing: As required to meet performance.
f. Fin and Tube Joint: Mechanical bond.
g. Headers:

1) Cast iron with cleaning plugs and drain and air vent tappings.
2) Seamless copper tube with brazed joints, prime coated.
3) Fabricated steel, with brazed joints, prime coated.
4) Provide insulated cover to conceal exposed outside casings of headers.

h. Frames: Channel frame, minimum 0.052-inch-thick galvanized steel.
i. Coil Working-Pressure Ratings: 200 psig, 325 deg F.
j. Coatings: Corrosion-resistant coating, where noted on the contract documents.

D. Steam Heating Coil:

1. Steam Coils: Distributed.

a. Piping Connections: Threaded or Flanged, same end of coil.
b. Tube Material: Copper.
c. Fin Type: Plate.
d. Fin Material: Aluminum.
e. Fin Spacing: As required to meet performance.
f. Fin and Tube Joint: Mechanical bond.
g. Headers:

1) Cast iron with cleaning plugs and drain and air vent tappings.
2) Seamless copper tube with brazed joints, prime coated.
3) Fabricated steel, with brazed joints, prime coated.
4) Provide insulated cover to conceal exposed outside casings of headers.

h. Frames: Channel frame, minimum 0.052-inch-thick galvanized steel.
i. Coil Working-Pressure Ratings: 200 psig, 325 deg F.
j. Coatings: Corrosion-resistant coating, where noted on the contract documents.

E. Outdoor-Air Refrigerant Coil:

1. Tubes: Copper.
2. Fins:

    a. Material: Aluminum.
    b. Fin Spacing: As required to meet performance.

3. Fin and Tube Joints: Mechanical bond.
4. Headers: Seamless-copper headers with brazed connections.
5. Frames: Galvanized steel.
6. Coatings: Corrosion-resistant coating, where noted on the contract documents.
7. Ratings: Designed, tested, and rated according to ASHRAE 33 and AHRI 410.

    a. Working Pressure: Minimum 300 psig.

F. Hot-Gas Reheat Refrigerant Coil:

1. Tubes: Copper.
2. Fins:

    a. Material: Aluminum.
    b. Fin Spacing: As required to meet performance.

3. Fin and Tube Joints: Mechanical bond.
4. Headers: Seamless-copper headers with brazed connections.
5. Frames: Galvanized steel.
6. Coatings: Corrosion-resistant coating, where noted on the contract documents.
7. Ratings: Designed, tested, and rated according to ASHRAE 33 and AHRI 410.

    a. Working Pressure: Minimum 300 psig.

8. Suction-discharge bypass valve.

G. Electric-Resistance Heating Coils: Comply with UL 1995.

1. Casing Assembly: Slip-in or Flanged type with galvanized-steel frame.
2. Open Heating Elements: Resistance wire of 80 percent nickel and 20 percent chromium supported and insulated by floating ceramic bushings recessed into casing openings, fastened to supporting brackets, and mounted in galvanized-steel frame.
3. Overtemperature Protection: Disk-type, automatically resetting, thermal-cutout, safety device; serviceable through terminal box without removing heater from coil section.
4. Secondary Protection: Load-carrying, manually resetting or manually replaceable, thermal cutouts; factory wired in series with each heater stage.
5. Control Panel: Unit mounted with disconnecting means and overcurrent protection.

    a. Magnetic contactor.
    b. Solid-state, stepless pulse controller.
    c. Toggle switches, one per step.
    d. Step controller.
    e. Time-delay relay.
    f. Pilot lights, one per step.
    g. Airflow proving switch.

2.7 REFRIGERANT CIRCUIT COMPONENTS

A. Number of Refrigerant Circuits: As required.

B. Compressor: Hermetic, variable speed scroll, mounted on vibration isolators; with internal overcurrent and high-temperature protection, internal pressure relief, and crankcase heater.

C. Refrigeration Specialties:

1. Refrigerant: R-410A.
2. Expansion valve with replaceable thermostatic element.
3. Refrigerant filter/dryer.
4. Manual-reset high-pressure safety switch.
5. Automatic-reset low-pressure safety switch.
6. Minimum off-time relay.
7. Automatic-reset compressor motor thermal overload.
8. Brass service valves installed in compressor suction and liquid lines.
9. Low-ambient kit high-pressure sensor.
10. Hot-gas reheat solenoid valve modulating with a replaceable magnetic coil.
11. Hot-gas bypass solenoid valve with a replaceable magnetic coil.
12. Four-way reversing valve with a replaceable magnetic coil, thermostatic expansion valves with bypass check valves, and a suction line accumulator.

2.8 AIR FILTRATION

A. Panel Filters:

1. Description: Pleated factory-fabricated, self-supported, disposable air filters with holding frames.
2. Filter Unit Class: UL 900.
3. Media: Interlaced glass, synthetic or cotton fibers coated with nonflammable adhesive and antimicrobial coating.
4. Filter-Media Frame: Beverage board with perforated metal retainer, or metal grid, on outlet side.

B. Bag Filter:

1. Description: Factory-fabricated, dry, extended-surface, self-supporting filters with holding frames in steel, basket-type retainers.
2. Filter Unit Class: UL 900.
3. Media: Fibrous material, with antimicrobial coating, constructed so individual pockets are maintained in tapered form by flexible internal supports under rated-airflow conditions.
4. Filter-Media Frame: Galvanized steel.

C. Cartridge Filters:

1. Description: Factory-fabricated, adhesive-coated disposable, packaged air filters with media perpendicular to airflow, and with holding frames.
2. Filter Unit Class: UL 900.
3. Media: Fibrous material, with antimicrobial coating, constructed so individual pleats are maintained in pleated form under rater-airflow conditions by corrugated aluminum separators.
4. Filter Media Frame: Galvanized steel.

D. Adhesive, Sustainability Projects: As recommended by air-filter manufacturer and with a VOC content of 80 g/L or less.

2.9 GAS FURNACES

A. Description: Factory assembled, piped, and wired; complying with ANSI Z21.47/CSA 2.3 and NFPA 54.

B. CSA Approval: Designed and certified by and bearing label of CSA.

C. Burners: Stainless steel.

1. Rated Minimum Turndown Ratio: 30 to 1.
2. Fuel: Natural gas.
3. Ignition: Electronically controlled electric spark or hot-surface igniter with flame sensor.
4. Gas Control Valve: Modulating.
5. Gas Train: Single-body, regulated, redundant, 24-V ac gas valve assembly containing pilot solenoid valve, pilot filter, pressure regulator, pilot shutoff, and manual shutoff.
6. High-Altitude Model or Kit: For Project elevations more than 2000 feet above sea level.

D. Heat-Exchanger and Drain Pan: Stainless steel.

E. Venting, Power: Power vented, with integral, motorized centrifugal fan interlocked with gas valve with vertical extension.

F. Safety Controls:

1. Gas Manifold: Safety switches and controls complying with ANSI standards. Coordinate with the Owner's Insurance Underwriter for any other specific gas train requirements.

2.10 ANTIMICROBIAL ULTRAVIOLET LAMP SYSTEM

A. Description:

1. UV-C lamp system consisting of power supply, power supply housing, wiring, UV lamp(s), lamp plug, lamp plug protector, encapsulated lamp, and lamp holder used for UV germicidal irradiation of cooling coil and condensate drain pan.
2. Factory installed and preengineered.

B. Standard: UL Category Code ABQK, HVAC accessories, air-duct mounted.

C. Lamps: High output, hot cathode.

D. Lamp-Holder Construction:

1. UV- and moisture-resistant materials and designed to connect the lamp to the plug.
2. Adjustable positioning.

E. Lamp-Clamp Construction:

1. UV- and moisture-resistant materials, water-tight connection.
2. Adjustable positioning.

F. Lamp Protection: Hermetically sealed to provide protection against lamp breakage and to ensure lamp contents from a broken lamp are contained.

G. Lamp Output: UV-C energy, primarily at the 254-nm wavelength with a 360-degree energy distribution.

H. Access Door Interlocks: Automatic disconnect on all access doors into UV-installed casing sections to shield servicing personnel from contact with light.

I. Power Supply: UL-listed, single-point electrical connection with service disconnect.

J. Power Consumption: Maximum of 15 W/sq. ft..

2.11 SOUND-ATTENUATOR SECTION

A. General Requirements:

1. Factory fabricated.
2. Fire-Performance Characteristics: Adhesives, sealants, packing materials, and accessory materials with flame-spread index not exceeding 25 and smoke-developed index not exceeding 50; ASTM E84.
3. Airstream Surfaces: Surfaces in contact with airstream shall comply with ASHRAE 62.1.

B. Shape: Rectangular, straight or Rectangular, elbow.

C. Rectangular Silencer Outer Casing: Galvanized steel.

D. Round Silencer Outer Casing: Galvanized steel.

E. Inner Casing and Baffles: Galvanized steel.

F. Principal Sound-Absorbing Mechanism:

1. Dissipative Type: Polymer film-lined absorptive fill material.

a. Fill Material: Inert and vermin-proof fibrous material.

2. Joints: Lock formed and sealed, continuously welded or flanged.

2.12 DAMPERS

A. Outdoor- and Return-Air Dampers: Low-leakage, double-skin, airfoil-blade, galvanized-steel dampers with compressible jamb seals and extruded-vinyl blade edge seals in opposed-blade arrangement with zinc-plated steel operating rods rotating in sintered bronze or nylon bearings mounted in a single galvanized-steel frame, and with operating rods connected with a common linkage. Leakage rate shall not exceed 4 cfm/sq. ft. at 1-inch wg and 8 cfm/sq. ft. at 4-inch wg

B. Barometric relief dampers.

C. Electronic Damper Operators:

1. Direct-coupled type designed for minimum 60,000 full-stroke cycles at rated torque.

2. Electronic damper position indicator shall have visual scale indicating percent of travel and 2- to 10-V dc, feedback signal.
3. Operator Motors:

    a. Comply with NEMA designation, temperature rating, service factor, enclosure type, and efficiency requirements for motors specified in Section 230513 "Common Motor Requirements for HVAC Equipment."
    b. Size to operate with sufficient reserve power to provide smooth modulating action or two-position action.
    c. Permanent Split-Capacitor or Shaded-Pole Type: Gear trains completely oil immersed and sealed. Equip spring-return motors with integral spiral-spring mechanism in housings designed for easy removal for service or adjustment of limit switches, auxiliary switches, or feedback potentiometer.

4. Nonspring-Return Motors for Dampers Larger Than 25 Sq. Ft.: Size for running torque of 150 in. x lbf and breakaway torque of 300 in. x lbf.
5. Spring-Return Motors for Dampers Larger Than 25 Sq. Ft.: Size for running and breakaway torque of 150 in. x lbf.
6. Size dampers for running torque calculated as follows:

    a. Parallel-Blade Damper with Edge Seals: 7 inch-lb/sq. ft. of damper.
    b. Opposed-Blade Damper with Edge Seals: 5 inch-lb/sq. ft. of damper.
    c. Parallel-Blade Damper without Edge Seals: 4 inch-lb/sq. ft of damper.
    d. Opposed-Blade Damper without Edge Seals: 3 inch-lb/sq. ft. of damper.
    e. Dampers with 2- to 3-Inch wg of Pressure Drop or Face Velocities of 1000 to 2500 fpm: Increase running torque by 1.5.
    f. Dampers with 3- to 4-Inch wg of Pressure Drop or Face Velocities of 2500 to 3000 fpm: Increase running torque by 2.0.

7. Coupling: V-bolt and V-shaped, toothed cradle.
8. Overload Protection: Electronic overload or digital rotation-sensing circuitry.
9. Fail-Safe Operation: Mechanical, spring-return mechanism with external, manual gear release on nonspring-return actuators.
10. Power Requirements (Modulating): Maximum 10 VA at 24 V ac or 8 W at 24 V dc.
11. Proportional Signal: 2 to 10 V dc or 4 to 20 mA, and 2- to 10-V dc position feedback signal.
12. Temperature Rating: Minus 22 to plus 122 deg F.
13. Run Time: 12 seconds open, 5 seconds closed.

2.13 ELECTRICAL POWER CONNECTIONS

A. RTU shall have a single connection of power to unit with unit-mounted disconnect switch accessible from outside unit and control-circuit transformer with built-in overcurrent protection.

2.14 CONTROLS

A. Control equipment and sequence of operation are specified in Section 230923 "Direct Digital Control (DDC) System for HVAC."

B. Interface Requirements for HVAC Instrumentation and Control System:

    1. Interface relay for scheduled operation.

2. Interface relay to provide indication of fault at the central workstation and diagnostic code storage.
3. Provide BACnet or LonWorks compatible interface for central HVAC control workstation for the following, but not limited to:

    a. Adjusting set points.
    b. Monitoring supply fan start, stop, and operation.
    c. Inquiring data to include outdoor-air damper position, supply- and room-air temperature and humidity.
    d. Monitoring occupied and unoccupied operations.
    e. Monitoring constant and variable motor loads.
    f. Monitoring variable-frequency drive operation.
    g. Monitoring cooling load.
    h. Monitoring economizer cycles.
    i. Monitoring air-distribution static pressure and ventilation air volume.

2.15 ROOF CURBS

A. Wind and Seismic Restraints: Metal brackets compatible with the curb and casing, painted to match RTU, used to anchor unit to the curb, and designed for loads at Project site. Comply with requirements in Section 230548 "Vibration and Seismic Controls for HVAC" for wind-load requirements.

B. Materials: Galvanized steel with corrosion-protection coating, watertight gaskets, and factory-installed wood nailer; complying with NRCA standards.

1. Curb Insulation and Adhesive: Comply with NFPA 90A or NFPA 90B.

    a. Materials: ASTM C1071, Type I or II.
    b. Thickness: 1 inch.

2. Application: Factory applied with adhesive and mechanical fasteners to the internal surface of curb.

    a. Liner Adhesive: Comply with ASTM C916, Type I.
    b. Mechanical Fasteners: Galvanized steel, suitable for adhesive attachment, mechanical attachment, or welding attachment to duct without damaging liner when applied as recommended by manufacturer and without causing leakage in cabinet.
    c. Liner materials applied in this location shall have air-stream surface coated with a temperature-resistant coating or faced with a plain or coated fibrous mat or fabric depending on service air velocity.
    d. Liner Adhesive: Comply with ASTM C916, Type I.

C. Curb Dimensions: Height of 24 inches. Adaptable horizontal dimensions as required for existing roof openings.

2.16 ACCESSORIES

A. Electric heater with integral thermostat maintains minimum 50 deg F temperature in gas burner compartment.

B. Duplex, 115-V, ground-fault-interrupter outlet with 15-A overcurrent protection. Include transformer if required. Outlet shall be energized even if the unit main disconnect is open.

C. Low-ambient kit using staged, damper on, or variable-speed condenser fans for operation down to 35 deg F.

D. Filter differential pressure switch with sensor tubing on either side of filter. Set for final filter pressure loss.

E. Remote potentiometer to adjust minimum economizer damper position.

F. Return-air bypass damper.

G. Factory- or field-installed demand-controlled ventilation.

H. Safeties:

1. Smoke detector.
2. Condensate overflow switch.
3. Phase-loss protection.
4. High and low pressure control.
5. Gas furnace or Electric coil airflow-proving switch.

I. Hail guards of galvanized steel, painted to match casing.

J. Vertical vent extensions to increase the separation between the outdoor-air intake and the flue-gas outlet.

K. Door switches to disable heating or reset set point when open.

L. Outdoor air intake weather hood with moisture eliminator.

M. Service Lights and Switch: Factory installed in each accessible section with weatherproof cover. Factory wire lights to a single-point field connection.

2.17 MATERIALS

A. Steel:

1. ASTM A36/A36M for carbon structural steel.
2. ASTM A568/A568M for steel sheet.

B. Stainless Steel:

1. Manufacturer's standard grade for casing.
2. Manufacturer's standard type, ASTM A240/A240M for bare steel exposed to airstream or moisture.

C. Galvanized Steel: ASTM A653/A653M.

D. Aluminum: ASTM B209.

E. Comply with Section 230546 "Coatings for HVAC" for corrosion-resistant coating.

F. Corrosion-Resistant Coating: Coat with a corrosion-resistant coating capable of withstanding a 3000-hour salt-spray test according to ASTM B117.

1. Standards:

a. ASTM B117 for salt spray.
b. ASTM D2794 for minimum impact resistance of 100 in-lb.
c. ASTM B3359 for cross-hatch adhesion of 5B.

2. Application: Immersion.
3. Thickness: 1 mil.
4. Gloss: Minimum gloss of 60 on a 60-degree meter.

2.18 SOURCE QUALITY CONTROL

A. AHRI Compliance:

1. Comply with AHRI 340/360 for testing and rating energy efficiencies for RTUs.
2. Comply with AHRI 210/240 for testing and rating energy efficiencies for RTUs
3. Comply with AHRI 270 for testing and rating sound performance for RTUs.
4. Comply with AHRI 1060 for testing and rating performance for air-to-air exchanger.

B. AMCA Compliance:

1. Comply with AMCA 11 and bear the AMCA-Certified Ratings Seal for air and sound performance according to AMCA 211 and AMCA 311.
2. Damper leakage tested in accordance with AMCA 500-D.
3. Operating Limits: Classify according to AMCA 99.

PART 3 - EXECUTION

3.1 EXAMINATION

A. Examine substrates, areas, and conditions, with Installer present, for compliance with requirements for installation tolerances and other conditions affecting performance of RTUs.

B. Examine roughing-in for RTUs to verify actual locations of piping and duct connections before equipment installation.

C. Examine roofs for suitable conditions where RTUs will be installed.

D. Proceed with installation only after unsatisfactory conditions have been corrected.

3.2 INSTALLATION

A. Roof Curb: Install on roof structure or concrete base, level and secure, according to NRCA's "NRCA Roofing Manual: Membrane Roof Systems." Install RTUs on curbs and coordinate roof penetrations and flashing with roof construction specified in Section 077200 "Roof Accessories." Secure RTUs to upper curb rail, and secure curb base to roof framing or concrete base with anchor bolts. Coordinate sizes and locations of roof curbs with actual equipment provided.

B. Equipment Mounting:

1. Where indicated on the plans,install RTUs on cast-in-place concrete equipment bases. Comply with requirements for equipment bases and foundations specified in Section 033000 "Cast-in-Place Concrete."
2. Comply with requirements for vibration isolation and seismic control devices specified in Section 230548 "Vibration and Seismic Controls for HVAC."

3.3 PIPING CONNECTIONS

A. Piping installation requirements are specified in other Sections. Drawings indicate general arrangement of piping, fittings, and specialties.

B. Where installing piping adjacent to RTU, allow space for service and maintenance.

C. Connect piping to unit mounted on vibration isolators with flexible connectors.

D. Connect condensate drain pans using NPS 1-1/4, ASTM B88, Type M copper tubing. Extend to nearest equipment or roof drain. Construct deep trap at connection to drain pan and install cleanouts at changes in direction.

E. Gas Piping: Comply with applicable requirements in Section 231123 "Facility Natural-Gas Piping." Connect gas piping to burner, full size of gas train inlet, and connect with union and shutoff valve with sufficient clearance for burner removal and service.

F. Hot- and Chilled-Water Piping: Comply with applicable requirements in Section 232113 "Hydronic Piping" and Section 232116 "Hydronic Piping Specialties." Install shutoff valve and union or flange at each coil supply connection. Install balancing valve and union or flange at each coil return connection.

G. Steam and Condensate Piping: Comply with applicable requirements in Section 232213 "Steam and Condensate Heating Piping" and Section 232216 "Steam and Condensate Heating Piping Specialties." Install shutoff valve at steam supply connections, float and thermostatic trap, and union or flange at each coil return connection. Install gate valve and inlet strainer at supply connection of dry steam humidifiers, and inverted bucket steam trap to condensate return connection.

H. Refrigerant Piping: Comply with applicable requirements in Section 232300 "Refrigerant Piping." Install shutoff valve and union or flange at each supply and return connection.

3.4 DUCT CONNECTIONS

A. Comply with duct installation requirements specified in other HVAC Sections. Drawings indicate the general arrangement of ducts. The following are specific connection requirements:

1. Install ducts to termination at top of roof curb.
2. Remove roof decking only as required for passage of ducts. Do not cut out decking under entire roof curb.
3. Connect supply ducts to RTUs with flexible duct connectors specified in Section 233300 "Air Duct Accessories."
4. Install return-air duct continuously through roof structure.

3.5 ELECTRICAL CONNECTIONS

A. Connect electrical wiring according to Section 260519 "Low-Voltage Electrical Power Conductors and Cables."

B. Ground equipment according to Section 260526 "Grounding and Bonding for Electrical Systems."

C. Install electrical devices furnished by manufacturer, but not factory mounted, according to NFPA 70 and NECA 1.

D. Install nameplate for each electrical connection, indicating electrical equipment designation and circuit number feeding connection.

1. Nameplate shall be laminated acrylic or melamine plastic signs as layers of black with engraved white letters at least 1/2 inch high.
2. Locate nameplate where easily visible.

3.6 CONTROL CONNECTIONS

A. Install control and electrical power wiring to field-mounted control devices.

B. Connect control wiring according to Section 260523 "Control-Voltage Electrical Power Cables."

3.7 STARTUP SERVICE

A. Engage a factory-authorized service representative to perform startup service.

B. Complete installation and startup checks according to manufacturer's written instructions.

1. Inspect for visible damage to unit casing.
2. Inspect for visible damage to furnace combustion chamber.
3. Inspect for visible damage to compressor, coils, and fans.
4. Inspect internal insulation.
5. Verify that labels are clearly visible.
6. Verify that clearances have been provided for servicing.
7. Verify that controls are connected and operable.
8. Verify that filters are installed.
9. Clean condenser coil and inspect for construction debris.
10. Clean furnace flue and inspect for construction debris.
11. Connect and purge gas line.
12. Remove packing from vibration isolators.
13. Inspect operation of barometric relief dampers.
14. Verify lubrication on fan and motor bearings.
15. Inspect fan-wheel rotation for movement in correct direction without vibration and binding.
16. Adjust fan belts to proper alignment and tension.
17. Start unit according to manufacturer's written instructions.

    a. Start refrigeration system.
    b. Do not operate below recommended low-ambient temperature.
    c. Complete startup sheets and attach copy with Contractor's startup report.

18. Inspect and record performance of interlocks and protective devices; verify sequences.

19. Operate unit for an initial period as recommended or required by manufacturer.
20. Perform the following operations for both minimum and maximum firing. Adjust burner for peak efficiency.

    a. Measure gas pressure on manifold.
    b. Inspect operation of power vents.
    c. Measure combustion-air temperature at inlet to combustion chamber.
    d. Measure flue-gas temperature at furnace discharge.
    e. Perform flue-gas analysis. Measure and record flue-gas carbon dioxide and oxygen concentration.
    f. Measure supply-air temperature and volume when burner is at maximum firing rate and when burner is off. Calculate useful heat to supply air.

21. Calibrate thermostats.
22. Adjust and inspect high-temperature limits.
23. Inspect outdoor-air dampers for proper stroke and interlock with return-air dampers.
24. Start refrigeration system and measure and record the following when ambient is a minimum of 15 deg F above return-air temperature:

    a. Coil leaving-air, dry- and wet-bulb temperatures.
    b. Coil entering-air, dry- and wet-bulb temperatures.
    c. Outdoor-air, dry-bulb temperature.
    d. Outdoor-air-coil, discharge-air, dry-bulb temperature.

25. Inspect controls for correct sequencing of heating, mixing dampers, refrigeration, and normal and emergency shutdown.
26. Measure and record the following minimum and maximum airflows. Plot fan volumes on fan curve.

    a. Supply-air volume.
    b. Return-air volume.
    c. Relief-air volume.
    d. Outdoor-air intake volume.

27. Simulate maximum cooling demand and inspect the following:

    a. Compressor refrigerant suction and hot-gas pressures.
    b. Short circuiting of air through condenser coil or from condenser fans to outdoor-air intake.

28. Verify operation of remote panel including pilot-light operation and failure modes. Inspect the following:

    a. High-temperature limit on gas-fired heat exchanger.
    b. Low-temperature safety operation.
    c. Filter high-pressure differential alarm.
    d. Economizer to minimum outdoor-air changeover.
    e. Relief-air fan operation.
    f. Smoke and firestat alarms.

29. After startup and performance testing and prior to Substantial Completion, replace existing filters with new filters.

3.8 ADJUSTING

A. Adjust damper linkages for proper damper operation.

B. Comply with requirements in Section 230593 "Testing, Adjusting, and Balancing for HVAC" for air-handling system testing, adjusting, and balancing.

C. Occupancy Adjustments: When requested within 12 months from date of Substantial Completion, provide on-site assistance in adjusting system to suit actual occupied conditions. Provide up to two visits to Project during other-than-normal occupancy hours for this purpose.

3.9 CLEANING

A. After completing system installation and testing, adjusting, and balancing RTUs and air-distribution systems and after completing startup service, clean RTUs internally to remove foreign material and construction dirt and dust. Clean fan wheels, cabinets, dampers, coils, and filter housings, and install new, clean filters.

3.10 FIELD QUALITY CONTROL

A. Manufacturer's Field Service: Engage a factory-authorized service representative to test and inspect components, assemblies, and equipment installations, including connections.

B. Perform the following tests and inspections with the assistance of a factory-authorized service representative:

1. After installing RTUs and after electrical circuitry has been energized, test units for compliance with requirements.
2. Inspect for and remove shipping bolts, blocks, and tie-down straps.
3. Operational Test: After electrical circuitry has been energized, start units to confirm proper motor rotation and unit operation.
4. Test and adjust controls and safeties. Replace damaged and malfunctioning controls and equipment.

C. RTU will be considered defective if it does not pass tests and inspections.

D. Prepare test and inspection reports.

3.11 DEMONSTRATION

A. Engage a factory-authorized service representative to train Owner's maintenance personnel to adjust, operate, and maintain RTUs.

END OF SECTION 23 74 16.13

SECTION 23 81 26 - SPLIT-SYSTEM AIR-CONDITIONERS

PART 1 - GENERAL

1.1 RELATED DOCUMENTS

A. Drawings and general provisions of the Contract, including General and Supplementary Conditions and Division 01 Specification Sections, apply to this Section.

1.2 SUMMARY

A. Section includes split-system air-conditioning and heat-pump units consisting of separate evaporator-fan and compressor-condenser components.

1.3 ACTION SUBMITTALS

A. Product Data: For each type of product indicated. Include rated capacities, operating characteristics, and furnished specialties and accessories. Include performance data in terms of capacities, outlet velocities, static pressures, sound power characteristics, motor requirements, and electrical characteristics.

B. Sustainable Design Submittals:

1. Product Data: For refrigerants, indicating compliance with refrigerant management practices.
2. Product Data: For energy performance.

C. Shop Drawings: Include plans, elevations, sections, details, and attachments to other work.

1. Detail equipment assemblies and indicate dimensions, weights, loads, required clearances, method of field assembly, components, and location and size of each field connection.
2. Wiring Diagrams: For power, signal, and control wiring.

D. Samples for Initial Selection: For units with factory-applied color finishes.

1.4 INFORMATIONAL SUBMITTALS

A. Field quality-control reports.

B. Warranty: Sample of special warranty.

1.5 CLOSEOUT SUBMITTALS

A. Operation and Maintenance Data: For split-system air-conditioning units to include in emergency, operation, and maintenance manuals.

1.6 MAINTENANCE MATERIAL SUBMITTALS

A. Furnish extra materials that match products installed and that are packaged with protective covering for storage and identified with labels describing contents.

1. Filters: One set(s) for each air-handling unit.
2. Gaskets: One set(s) for each access door.
3. Fan Belts: One set(s) for each air-handling unit fan.

1.7 QUALITY ASSURANCE

A. Electrical Components, Devices, and Accessories: Listed and labeled as defined in NFPA 70, by a qualified testing agency, and marked for intended location and application.

B. ASHRAE Compliance:

1. Fabricate and label refrigeration system to comply with ASHRAE 15, "Safety Standard for Refrigeration Systems."
2. ASHRAE Compliance: Applicable requirements in ASHRAE 62.1, Section 4 - "Outdoor Air Quality," Section 5 - "Systems and Equipment," Section 6 - " Procedures," and Section 7 - "Construction and System Start-up."

C. ASHRAE/IES Compliance: Applicable requirements in ASHRAE/IES 90.1.

1.8 COORDINATION

A. Coordinate sizes and locations of concrete bases with actual equipment provided. Cast anchor-bolt inserts into bases. Concrete, reinforcement, and formwork are specified in Section 033000 "Cast-in-Place Concrete."

B. Coordinate sizes and locations of roof curbs, equipment supports, and roof penetrations with actual equipment provided.

1.9 WARRANTY

A. Special Warranty: Manufacturer's standard form in which manufacturer agrees to repair or replace components of split-system air-conditioning units that fail in materials or workmanship within specified warranty period.

1. Warranty Period:

a. For Compressor: Five year(s) from date of Substantial Completion.
b. For Parts: Five year(s) from date of Substantial Completion.
c. For Labor: Five year(s) from date of Substantial Completion.

PART 2 - PRODUCTS

2.1 MANUFACTURERS

A. Basis-of-Design Product: Subject to compliance with requirements, provide product indicated on Drawings or comparable product by one of the following:

1. Carrier Global Corporation.
2. Lennox Industries, Inc.; Lennox International.
3. Mitsubishi Electric & Electronics USA, Inc.
4. Samsung HVAC.
5. Trane.
6. YORK; brand of Johnson Controls International plc, Building Solutions North America.

2.2 INDOOR UNITS (5 TONS OR LESS)

A. Concealed Evaporator-Fan Components:

1. Chassis: Galvanized steel with flanged edges, removable panels for servicing, and insulation on back of panel.
2. Insulation: Faced, glass-fiber duct liner.
3. Refrigerant Coil: Copper tube, with mechanically bonded aluminum fins and thermal-expansion valve. Comply with ARI 206/110.
4. Water Coil: Copper tube, with mechanically bonded aluminum fins spaced no closer than 0.1 inch; leak tested to 300 psig underwater; with a two-position control valve.
5. Electric Coil: Helical, nickel-chrome, resistance-wire heating elements; with refractory ceramic support bushings, automatic-reset thermal cutout, built-in magnetic contactors, manual-reset thermal cutout, airflow proving device, and one-time fuses in terminal box for overcurrent protection.
6. Fan: Forward-curved, double-width wheel of galvanized steel; directly connected to motor.
7. Fan Motors:

    a. Comply with NEMA designation, temperature rating, service factor, enclosure type, and efficiency requirements specified in Section 230513 "Common Motor Requirements for HVAC Equipment."
    b. Multitapped, multispeed with internal thermal protection and permanent lubrication.
    c. Wiring Terminations: Connect motor to chassis wiring with plug connection.

8. Airstream Surfaces: Surfaces in contact with the airstream shall comply with requirements in ASHRAE 62.1.
9. Filters: Permanent, cleanable.
10. Condensate Drain Pans:

    a. Fabricated with one percent slope in at least two planes to collect condensate from cooling coils (including coil piping connections, coil headers, and return bends) and humidifiers, and to direct water toward drain connection.

        1) Length: Extend drain pan downstream from leaving face to comply with ASHRAE 62.1.
        2) Depth: A minimum of 2 inches deep.

    b. Double-wall, stainless-steel sheet with space between walls filled with foam insulation and moisture-tight seal.

c. Drain Connection: Located at lowest point of pan and sized to prevent overflow. Terminate with threaded nipple on one end of pan.

1) Minimum Connection Size: NPS 1.

d. Units with stacked coils shall have an intermediate drain pan to collect condensate from top coil.

B. Floor-Mounted, Evaporator-Fan Components:

1. Cabinet: Enameled steel with removable panels on front and ends in color selected by Architect.

a. Discharge Grille: Steel with surface-mounted frame.
b. Insulation: Faced, glass-fiber duct liner.
c. Drain Pans: Galvanized steel, with connection for drain; insulated.

2. Refrigerant Coil: Copper tube, with mechanically bonded aluminum fins and thermal-expansion valve. Comply with ARI 206/110.
3. Water Coil: Copper tube, with mechanically bonded aluminum fins spaced no closer than 0.1 inch; leak tested to 300 psig underwater; with a two-position control valve.
4. Electric Coil: Helical, nickel-chrome, resistance-wire heating elements; with refractory ceramic support bushings, automatic-reset thermal cutout, built-in magnetic contactors, manual-reset thermal cutout, airflow proving device, and one-time fuses in terminal box for overcurrent protection.
5. Fan: Direct drive, centrifugal.
6. Fan Motors:

a. Comply with NEMA designation, temperature rating, service factor, enclosure type, and efficiency requirements specified in Section 230513 "Common Motor Requirements for HVAC Equipment."
b. Multitapped, multispeed with internal thermal protection and permanent lubrication.

7. Air Filtration Section:

a. General Requirements for Air Filtration Section:

1) Comply with NFPA 90A.
2) Minimum MERV according to ASHRAE 52.2.
3) Filter-Holding Frames: Arranged for flat or angular orientation, with access doors on both sides of unit. Filters shall be removable from one side or lifted out from access plenum.

b. Extended-Surface, Disposable Panel Filters:

1) Factory-fabricated, dry, extended-surface type.
2) Thickness: 2 inches.
3) MERV according to ASHRAE 52.2: 7.
4) Media: Fibrous material formed into deep-V-shaped pleats with antimicrobial agent and held by self-supporting wire grid.
5) Media-Grid Frame: Nonflammable cardboard.
6) Mounting Frames: Welded, galvanized steel, with gaskets and fasteners; suitable for bolting together into built-up filter banks.

C. Wall-Mounted, Evaporator-Fan Components:

1. Cabinet: Enameled steel with removable panels on front and ends in color selected by Architect, and discharge drain pans with drain connection.
2. Refrigerant Coil: Copper tube, with mechanically bonded aluminum fins and thermal-expansion valve. Comply with ARI 206/110.
3. Electric Coil: Helical, nickel-chrome, resistance-wire heating elements; with refractory ceramic support bushings, automatic-reset thermal cutout, built-in magnetic contactors, manual-reset thermal cutout, airflow proving device, and one-time fuses in terminal box for overcurrent protection.
4. Fan: Direct drive, centrifugal.
5. Fan Motors:

    a. Comply with NEMA designation, temperature rating, service factor, enclosure type, and efficiency requirements specified in Section 230513 "Common Motor Requirements for HVAC Equipment."
    b. Multitapped, multispeed with internal thermal protection and permanent lubrication.
    c. NEMA Premium (TM) efficient motors as defined in NEMA MG 1.
    d. Controllers, Electrical Devices, and Wiring: Comply with requirements for electrical devices and connections specified in electrical Sections.
    e. Mount unit-mounted disconnect switches on interior of unit.

6. Airstream Surfaces: Surfaces in contact with the airstream shall comply with requirements in ASHRAE 62.1.
7. Condensate Drain Pans:

    a. Fabricated with one percent slope in at least two planes to collect condensate from cooling coils (including coil piping connections, coil headers, and return bends) and humidifiers, and to direct water toward drain connection.

        1) Length: Extend drain pan downstream from leaving face to comply with ASHRAE 62.1.
        2) Depth: A minimum of 1 inch deep.

    b. Double-wall, stainless-steel sheet with space between walls filled with foam insulation and moisture-tight seal.
    c. Drain Connection: Located at lowest point of pan and sized to prevent overflow. Terminate with threaded nipple on one end of pan.

        1) Minimum Connection Size: NPS 1.

8. Air Filtration Section:

    a. General Requirements for Air Filtration Section:

        1) Comply with NFPA 90A.
        2) Minimum MERV according to ASHRAE 52.2.
        3) Filter-Holding Frames: Arranged for flat or angular orientation, with access doors on both sides of unit. Filters shall be removable from one side or lifted out from access plenum.

    b. Extended-Surface, Disposable Panel Filters:

        1) Factory-fabricated, dry, extended-surface type.
        2) Thickness: 2 inches.
        3) MERV according to ASHRAE 52.2: 7.

4) Media: Fibrous material formed into deep-V-shaped pleats with antimicrobial agent and held by self-supporting wire grid.
5) Media-Grid Frame: Nonflammable cardboard.
6) Mounting Frames: Welded, galvanized steel, with gaskets and fasteners; suitable for bolting together into built-up filter banks.

2.3 INDOOR UNITS (6 TONS OR MORE)

A. Concealed Evaporator-Fan Components:

1. Chassis: Galvanized steel with flanged edges, removable panels for servicing, and insulation on back of panel.
2. Insulation: Faced, glass-fiber duct liner.
3. Refrigerant Coil: Copper tube, with mechanically bonded aluminum fins and thermal-expansion valve. Comply with ARI 206/110.
4. Water Coil: Copper tube, with mechanically bonded aluminum fins spaced no closer than 0.1 inch; leak tested to 300 psig underwater; with a two-position control valve.
5. Electric Coil: Helical, nickel-chrome, resistance-wire heating elements; with refractory ceramic support bushings, automatic-reset thermal cutout, built-in magnetic contactors, manual-reset thermal cutout, airflow proving device, and one-time fuses in terminal box for overcurrent protection.
6. Fan: Forward-curved, double-width wheel of galvanized steel; directly connected to motor.
7. Fan Motors:

   a. Comply with NEMA designation, temperature rating, service factor, enclosure type, and efficiency requirements specified in Section 230513 "Common Motor Requirements for HVAC Equipment."
   b. Multitapped, multispeed with internal thermal protection and permanent lubrication.
   c. Three-phase, permanently lubricated, ball-bearing motors with built-in thermal-overload protection.
   d. Wiring Terminations: Connect motor to chassis wiring with plug connection.

8. Airstream Surfaces: Surfaces in contact with the airstream shall comply with requirements in ASHRAE 62.1.
9. Filters: Permanent, cleanable.
10. Condensate Drain Pans:

    a. Fabricated with one percent slope in at least two planes to collect condensate from cooling coils (including coil piping connections, coil headers, and return bends) and humidifiers, and to direct water toward drain connection.

       1) Length: Extend drain pan downstream from leaving face to comply with ASHRAE 62.1.
       2) Depth: A minimum of 2 inches deep.

    b. Double-wall, stainless-steel sheet with space between walls filled with foam insulation and moisture-tight seal.
    c. Drain Connection: Located at lowest point of pan and sized to prevent overflow. Terminate with threaded nipple on one end of pan.

       1) Minimum Connection Size: NPS 1.

    d. Units with stacked coils shall have an intermediate drain pan to collect condensate from top coil.

B. Floor-Mounted, Evaporator-Fan Components:

1. Cabinet: Enameled steel with removable panels on front and ends in color selected by Architect.

   a. Discharge Grille: Steel with surface-mounted frame.
   b. Insulation: Faced, glass-fiber duct liner.

2. Condensate Drain Pans:

   a. Fabricated with one percent slope in at least two planes to collect condensate from cooling coils (including coil piping connections, coil headers, and return bends) and humidifiers, and to direct water toward drain connection.

      1) Length: Extend drain pan downstream from leaving face to comply with ASHRAE 62.1.
      2) Depth: A minimum of 2 inches deep.

   b. Double-wall, stainless-steel sheet with space between walls filled with foam insulation and moisture-tight seal.
   c. Drain Connection: Located at lowest point of pan and sized to prevent overflow. Terminate with threaded nipple on one end of pan.

      1) Minimum Connection Size: NPS 1.

   d. Units with stacked coils shall have an intermediate drain pan to collect condensate from top coil.

3. Refrigerant Coil: Copper tube, with mechanically bonded aluminum fins and thermal-expansion valve. Comply with ARI 206/110.
4. Water Coil: Copper tube, with mechanically bonded aluminum fins spaced no closer than 0.1 inch; leak tested to 300 psig underwater; with a two-position control valve.
5. Electric Coil: Helical, nickel-chrome, resistance-wire heating elements; with refractory ceramic support bushings, automatic-reset thermal cutout, built-in magnetic contactors, manual-reset thermal cutout, airflow proving device, and one-time fuses in terminal box for overcurrent protection.
6. Fan: Direct drive, centrifugal.
7. Fan Motors:

   a. Comply with NEMA designation, temperature rating, service factor, enclosure type, and efficiency requirements specified in Section 230513 "Common Motor Requirements for HVAC Equipment."
   b. Multitapped, multispeed with internal thermal protection and permanent lubrication.
   c. NEMA Premium (TM) efficient motors as defined in NEMA MG 1.
   d. Controllers, Electrical Devices, and Wiring: Comply with requirements for electrical devices and connections specified in electrical Sections.
   e. Mount unit-mounted disconnect switches on interior of unit.

8. Air Filtration Section:

   a. General Requirements for Air Filtration Section:

      1) Comply with NFPA 90A.
      2) Minimum MERV according to ASHRAE 52.2.

3) Filter-Holding Frames: Arranged for flat or angular orientation, with access doors on both sides of unit. Filters shall be removable from one side or lifted out from access plenum.

b. Extended-Surface, Disposable Panel Filters:

1) Factory-fabricated, dry, extended-surface type.
2) Thickness: 2 inches.
3) MERV according to ASHRAE 52.2: 7.
4) Media: Fibrous material formed into deep-V-shaped pleats with antimicrobial agent and held by self-supporting wire grid.
5) Media-Grid Frame: Nonflammable cardboard.
6) Mounting Frames: Welded, galvanized steel, with gaskets and fasteners; suitable for bolting together into built-up filter banks.

C. Variable-Frequency Controllers:

1. Description: NEMA ICS 2, IGBT, PWM, VFC; listed and labeled as a complete unit and arranged to provide variable speed of an NEMA MG 1, Design B, three-phase induction motor by adjusting output voltage and frequency.
2. Output Rating: Three-phase; 6 to 60 Hz, with voltage proportional to frequency throughout voltage range.
3. Unit Operating Requirements:

a. Input ac voltage tolerance of 208 V, plus or minus 5 percent.
b. Input-frequency tolerance of 06/11 Hz, plus or minus 6 percent.
c. Minimum Efficiency: 96 percent at 60 Hz, full load.
d. Minimum Displacement Primary-Side Power Factor: 96 percent.
e. Overload Capability: 1.1 times the base load current for 60 seconds; 2.0 times the base load current for 3 seconds.
f. Starting Torque: 100 percent of rated torque or as indicated.
g. Speed Regulation: Plus or minus 1 percent.

4. Isolated control interface to allow controller to follow control signal over an 11:1 speed range.
5. Internal Adjustability Capabilities:

a. Minimum Speed: 5 to 25 percent of maximum rpm.
b. Maximum Speed: 80 to 100 percent of maximum rpm.
c. Acceleration: 2 seconds to a minimum of 22 seconds.
d. Deceleration: 2 seconds to a minimum of 22 seconds.
e. Current Limit: 50 percent to a minimum of 110 percent of maximum rating.

6. Self-Protection and Reliability Features:

a. Input transient protection by means of surge protection devices (SPDs).
b. Undervoltage and overvoltage trips; inverter overtemperature, overload, and overcurrent trips.
c. Adjustable motor overload relays capable of NEMA ICS 2, Class 10 performance.
d. Notch filter to prevent operation of the controller-motor-load combination at a natural frequency of the combination.
e. Instantaneous line-to-line and line-to-ground overcurrent trips.
f. Loss-of-phase protection.
g. Reverse-phase protection.
h. Short-circuit protection.

i. Motor overtemperature fault.

7. Automatic Reset/Restart: Attempts three restarts after controller fault or on return of power after an interruption and before shutting down for manual reset or fault correction. Bidirectional autospeed search shall be capable of starting into rotating loads, spinning in either direction and returning motor to set speed in proper direction, without damage to controller, motor, or load.
8. Power-Interruption Protection: Prevents motor from re-energizing after a power interruption until motor has stopped.
9. Torque Boost: Automatically varies starting and continuous torque to at least 1.5 times the minimum torque to ensure high-starting torque and increased torque at slow speeds.
10. Motor Temperature Compensation at Slow Speeds: Adjustable current fall-back, based on output frequency for temperature protection of self-cooled, fan-ventilated motors at slow speeds.
11. Door-mounted, digital status lights shall indicate the following conditions:

    a. Power on.
    b. Run.
    c. Overvoltage.
    d. Line fault.
    e. Overcurrent.
    f. External fault.

12. Panel-Mounted Operator Station: Start-stop and auto-manual selector switches with manual-speed-control potentiometer and elapsed-time meter.
13. Meters or digital readout devices and selector switch, mounted flush in controller door and connected, to indicate the following controller parameters:

    a. Output frequency (Hertz).
    b. Motor speed (rpm).
    c. Motor status (running, stop, fault).
    d. Motor current (amperes).
    e. Motor torque (percent).
    f. Fault or alarming status (code).
    g. Proportional-integral-derivative feedback signal (percent).
    h. DC-link voltage (volts dc).
    i. Set-point frequency (Hertz).
    j. Motor output voltage (volts).

14. Control Signal Interface:

    a. Electric Input Signal Interface: A minimum of two analog inputs (0 to 10 V or 0/4-20 mA) and six programmable digital inputs.
    b. Remote signal inputs capable of accepting any of the following speed-setting input signals from the control system:

        1) 0 to 10-V dc.
        2) 0-20 or 4-20 mA.
        3) Potentiometer using up/down digital inputs.
        4) Fixed frequencies using digital inputs.
        5) RS485.
        6) Keypad display for local hand operation.

    c. Output signal interface with a minimum of one analog output signal (0/4-20 mA), which can be programmed to any of the following:

1) Output frequency (Hertz).
2) Output current (load).
3) DC-link voltage (volts dc).
4) Motor torque (percent).
5) Motor speed (rpm).
6) Set-point frequency (Hertz).

d. Remote indication interface with a minimum of two dry circuit relay outputs (120-V ac, 1 A) for remote indication of the following:

1) Motor running.
2) Set-point speed reached.
3) Fault and warning indication (overtemperature or overcurrent).
4) High- or low-speed limits reached.

15. Communications: RS485 interface allows VFC to be used with an external system within a multidrop LAN configuration. Interface shall allow all parameter settings of VFC to be programmed via BMS control. Provide capability for VFC to retain these settings within the nonvolatile memory.
16. Integral Disconnecting Means: NEMA AB 1, instantaneous-trip circuit breaker with lockable handle.
17. Accessories:

a. Devices shall be factory installed in controller enclosure unless otherwise indicated.
b. Push-Button Stations, Pilot Lights, and Selector Switches: NEMA ICS 2, heavy-duty type.
c. Standard Displays:

1) Output frequency (Hertz).
2) Set-point frequency (Hertz).
3) Motor current (amperes).
4) DC-link voltage (volts dc).
5) Motor torque (percent).
6) Motor speed (rpm).
7) Motor output voltage (volts).

2.4 OUTDOOR UNITS (5 TONS OR LESS)

A. Air-Cooled, Compressor-Condenser Components:

1. Casing: Steel, finished with baked enamel in color selected by Architect, with removable panels for access to controls, weep holes for water drainage, and mounting holes in base. Provide brass service valves, fittings, and gage ports on exterior of casing.
2. Compressor: Hermetically sealed with crankcase heater and mounted on vibration isolation device. Compressor motor shall have thermal- and current-sensitive overload devices, start capacitor, relay, and contactor.

a. Compressor Type: Scroll.
b. Two-speed compressor motor with manual-reset high-pressure switch and automatic-reset low-pressure switch.
c. Refrigerant: R-410A.
d. Refrigerant Coil: Copper tube, with mechanically bonded aluminum fins and liquid subcooler. Comply with ARI 206/110.

3. Heat-Pump Components: Reversing valve and low-temperature-air cutoff thermostat.
4. Fan: Aluminum-propeller type, directly connected to motor.
5. Motor: Permanently lubricated, with integral thermal-overload protection.
6. Low Ambient Kit: Permits operation down to 45 deg F.
7. Mounting Base: Polyethylene.

2.5 OUTDOOR UNITS (6 TONS OR MORE)

A. Air-Cooled, Compressor-Condenser Components:

1. Casing: Steel, finished with baked enamel in color selected by Architect, with removable panels for access to controls, weep holes for water drainage, and mounting holes in base. Provide brass service valves, fittings, and gage ports on exterior of casing.
2. Compressor: Hermetically sealed with crankcase heater and mounted on vibration isolation device. Compressor motor shall have thermal- and current-sensitive overload devices, start capacitor, relay, and contactor.

    a. Compressor Type: Scroll.
    b. Two-speed compressor motor with manual-reset high-pressure switch and automatic-reset low-pressure switch.
    c. Refrigerant: R-410A.
    d. Refrigerant Coil: Copper tube, with mechanically bonded aluminum fins and liquid subcooler. Comply with ARI 206/110.

3. Heat-Pump Components: Reversing valve and low-temperature-air cutoff thermostat.
4. Fan: Aluminum-propeller type, directly connected to motor.
5. Motor: Permanently lubricated, with integral thermal-overload protection.
6. Low Ambient Kit: Permits operation down to 45 deg F.
7. Mounting Base: Polyethylene.

B. Water-Cooled, Compressor-Condenser Components:

1. Casing: Steel, finished with baked enamel in color selected by Architect, with removable panels for access to controls and mounting holes in base. Provide brass service valves, fittings, and gage ports on exterior of casing.
2. Compressor: Hermetically sealed with crankcase heater and mounted on vibration isolation device. Compressor motor shall have thermal- and current-sensitive overload devices, start capacitor, relay, and contactor.

    a. Compressor Type: Scroll.
    b. Two-speed compressor motor with manual-reset high-pressure switch and automatic-reset low-pressure switch.
    c. Refrigerant: R-410A.

3. Heat-Pump Components: Reversing valve.
4. Heat Exchanger: Copper tubes in copper tube or in steel shell, with water-temperature-actuated, water-regulating valve.

2.6 ACCESSORIES

A. Control equipment and sequence of operation are specified in Section 230923 "Direct Digital Control (DDC) System for HVAC" and Section 230993.11 "Sequence of Operations for HVAC DDC." Or as indicated on the drawings.

B. Thermostat: Low voltage with subbase to control compressor and evaporator fan.

C. Thermostat: Wireless infrared functioning to remotely control compressor and evaporator fan, with the following features:

1. Compressor time delay.
2. 24-hour time control of system stop and start.
3. Liquid-crystal display indicating temperature, set-point temperature, time setting, operating mode, and fan speed.
4. Fan-speed selection including auto setting.

D. Automatic-reset timer to prevent rapid cycling of compressor.

E. Refrigerant Line Kits: Soft-annealed copper suction and liquid lines factory cleaned, dried, pressurized, and sealed; factory-insulated suction line with flared fittings at both ends.

F. Drain Hose: For condensate.

G. Monitoring:

1. Monitor constant and variable motor loads.
2. Monitor variable-frequency-drive operation.
3. Monitor economizer cycle.
4. Monitor cooling load.
5. Monitor air distribution static pressure and ventilation air volumes.

PART 3 - EXECUTION

3.1 INSTALLATION

A. Install units level and plumb.

B. Install evaporator-fan components using manufacturer's standard mounting devices securely fastened to building structure.

C. Install roof-mounted, compressor-condenser components on equipment supports specified in Section 077200 "Roof Accessories." Anchor units to supports with removable, cadmium-plated fasteners.

D. Equipment Mounting:

1. Install ground-mounted, compressor-condenser components on cast-in-place concrete equipment base(s). Comply with requirements for equipment bases and foundations specified in Section 033000 "Cast-in-Place Concrete."
2. Comply with requirements for vibration isolation devices specified in Section 230548.13 "Vibration Controls for HVAC."

E. Install and connect precharged refrigerant tubing to component's quick-connect fittings. Install tubing to allow access to unit.

3.2 CONNECTIONS

A. Piping installation requirements are specified in other Sections. Drawings indicate general arrangement of piping, fittings, and specialties.

1. Water Coil Connections: Comply with requirements specified in Section 232113 "Hydronic Piping" and Section 232116 Hydronic Piping Specialties." Connect hydronic piping to supply and return coil connections with shutoff-duty valve and union or flange on the supply connection and with throttling-duty valve and union or flange on the return connection.
2. Remote, Water-Cooled Condenser Connections: Comply with requirements specified in Section 232113 "Hydronic Piping" and Section 232116 Hydronic Piping Specialties." Connect hydronic piping to supply and return connections with shutoff-duty valve and union or flange on the supply connection and with throttling-duty valve and union or flange on the return connection.

B. Where piping is installed adjacent to unit, allow space for service and maintenance of unit.

C. Duct Connections: Duct installation requirements are specified in Section 233113 "Metal Ducts." Drawings indicate the general arrangement of ducts. Connect supply[and return] ducts to split-system air-conditioning units with flexible duct connectors. Flexible duct connectors are specified in Section 233300 "Air Duct Accessories."

3.3 FIELD QUALITY CONTROL

A. Perform tests and inspections.

1. Manufacturer's Field Service: Engage a factory-authorized service representative to inspect components, assemblies, and equipment installations, including connections, and to assist in testing.

B. Tests and Inspections:

1. Leak Test: After installation, charge system and test for leaks. Repair leaks and retest until no leaks exist.
2. Operational Test: After electrical circuitry has been energized, start units to confirm proper motor rotation and unit operation.
3. Test and adjust controls and safeties. Replace damaged and malfunctioning controls and equipment.

C. Remove and replace malfunctioning units and retest as specified above.

D. Prepare test and inspection reports.

3.4 STARTUP SERVICE

A. Engage a factory-authorized service representative to perform startup service.

1. Complete installation and startup checks according to manufacturer's written instructions.

3.5 DEMONSTRATION

A. Engage a factory-authorized service representative to train Owner's maintenance personnel to adjust, operate, and maintain units.

END OF SECTION 23 81 26

SECTION 23 82 39.19 - WALL AND CEILING UNIT HEATERS

PART 1 - GENERAL

1.1 RELATED DOCUMENTS

A. Drawings and general provisions of the Contract, including General and Supplementary Conditions and Division 01 Specification Sections, apply to this Section.

1.2 SUMMARY

A. Section includes wall and ceiling heaters with propeller fans and electric-resistance heating coils.

1.3 ACTION SUBMITTALS

A. Product Data: For each type of product.

1. Include rated capacities, operating characteristics, furnished specialties, and accessories.

B. Sustainable Design Submittals:

1. Product Data: For ventilation equipment, indicating compliance with ASHRAE 62.1, Section 5 - "Systems and Equipment."

C. Shop Drawings:

1. Include plans, elevations, sections, and details.
2. Include details of equipment assemblies. Indicate dimensions, weights, loads, required clearances, method of field assembly, components, and location and size of each field connection.
3. Include details of anchorages and attachments to structure and to supported equipment.
4. Include equipment schedules to indicate rated capacities, operating characteristics, furnished specialties, and accessories.
5. Wiring Diagrams: Power, signal, and control wiring.

D. Samples: For each exposed product and for each color and texture specified.

1.4 CLOSEOUT SUBMITTALS

A. Operation and Maintenance Data: For wall and ceiling unit heaters to include in emergency, operation, and maintenance manuals.

PART 2 - PRODUCTS

2.1 MANUFACTURERS

A. Basis-of-Design Product: Subject to compliance with requirements, provide product indicated on Drawings or comparable product by one of the following:

1. Berko; Marley Engineered Products.
2. Chromalox, Inc.
3. INDEECO.
4. Markel Products; TPI Corporation.
5. Marley Engineered Products.
6. QMark; Marley Engineered Products.
7. Trane.

2.2 DESCRIPTION

A. Assembly including chassis, electric heating coil, fan, motor, and controls. Comply with UL 2021.

B. Electrical Components, Devices, and Accessories: Listed and labeled as defined in NFPA 70, by a qualified testing agency, and marked for intended location and application.

2.3 CABINET

A. Front Panel: Stamped-steel louver, with removable panels fastened with tamperproof fasteners.

B. Finish: Baked enamel over baked-on primer with manufacturer's standard color selected by Architect, applied to factory-assembled and -tested wall and ceiling heaters before shipping.

C. Airstream Surfaces: Surfaces in contact with the airstream shall comply with requirements in ASHRAE 62.1.

D. Surface-Mounted Cabinet Enclosure: Steel with finish to match cabinet.

2.4 COIL

A. Electric-Resistance Heating Coil: Nickel-chromium heating wire, free from expansion noise and 60-Hz hum, embedded in magnesium oxide refractory and sealed in corrosion-resistant metallic sheath. Terminate elements in stainless-steel, machine-staked terminals secured with stainless-steel hardware, and limit controls for high-temperature protection. Provide integral circuit breaker for overcurrent protection.

2.5 FAN AND MOTOR

A. Fan: Aluminum propeller directly connected to motor.

B. Motor: Permanently lubricated, multispeed. Comply with requirements in Section 230513 "Common Motor Requirements for HVAC Equipment."

2.6 CONTROLS

A. Controls: Unit-mounted thermostat. Low-voltage relay with transformer kit.

B. Electrical Connection: Factory wire motors and controls for a single field connection with disconnect switch.

PART 3 - EXECUTION

3.1 EXAMINATION

A. Examine areas to receive wall and ceiling unit heaters for compliance with requirements for installation tolerances and other conditions affecting performance of the Work.

B. Examine roughing-in for electrical connections to verify actual locations before unit-heater installation.

C. Proceed with installation only after unsatisfactory conditions have been corrected.

3.2 INSTALLATION

A. Install wall and ceiling unit heaters to comply with NFPA 90A.

B. Install wall and ceiling unit heaters level and plumb.

C. Install wall-mounted thermostats and switch controls in electrical outlet boxes at heights to match lighting controls. Verify location of thermostats and other exposed control sensors with Drawings and room details before installation.

D. Ground equipment according to Section 260526 "Grounding and Bonding for Electrical Systems."

E. Connect wiring according to Section 260519 "Low-Voltage Electrical Power Conductors and Cables."

END OF SECTION 23 82 39.19

DIVISION 26

SECTION 26 00 00 - ELECTRICAL GENERAL

PART 1 - GENERAL

1.1 GENERAL REQUIREMENTS

A. General Conditions: Refer to the General Conditions, the Supplementary General Conditions and the Special Conditions, all provisions of which apply to work under this section as if written in full herein.

B. The scope of work to be done under this section of the specifications shall include the furnishing of labor, material, equipment and tools required for the complete installation of systems for power, lighting, signals and all other work indicated on the drawings or as specified herein. A 100% operational building and electrical distribution system up to a connection point for Owner furnished equipment will be provided.

C. The drawings and specifications are complementary to each other and what is called for by one shall be as binding as if called for by both.

1.2 STANDARDS

A. All work shall conform to all ordinances and regulations of the City, County, State and/or other authorities having jurisdiction in accordance with the requirements of the following codes, standards and design guides:

1. The National Electrical Code (NFPA 70) with local Amendments
2. The IBC with local Amendments
3. The IFC with local Amendments
4. Regulations of the local utility company with respect to metering and service entrance
5. Local city and county ordinances governing electrical work
6. Americans with Disabilities Act (Public Law 101-336)
7. The International Energy Conservation Code

B. See the code sheet for applicable year/edition of each code listed above.

1.3 PERMITS

A. The Contractor shall obtain all permits and inspections required for the installation of this work and pay all charges incident thereto. He shall deliver to the Architect all certificates of said inspection.

1.4 WORK INCLUDED

The electrical systems installed, and work performed under this division of the specifications shall include but not necessarily be limited to those listed below. All materials and appliances, obviously a part of the electrical systems and necessary to its proper operation, but not specifically mentioned or shown on the drawings, shall be furnished and installed without additional charge.

A. Power Distribution System

B. All lighting systems (indoor and outdoor, normal, emergency and exit) including all fixtures, lamps, plaster and/or tile frames, standards, switches, outlets, wiring, dimmers, contactors, time clocks, photocells, batteries, raceways and other components and fittings required for complete lighting systems

C. Wiring, including power circuit connections for HVAC, plumbing and other mechanical equipment

D. Grounding Systems

E. Temporary service lighting and power system

F. Low voltage system raceways and equipment mounting boards as indicated on the drawings

G. Underground raceway excavation, backfill, and compaction

H. Concrete work for duct banks, manholes, covering, lighting standard bases and equipment bases (where not assigned to General Contractor)

I. Electrical Equipment Identification

J. Supporting Devices for Electrical Components

K. Work as required by electric and telecommunication utilities, as well as the coordination of additional work (i.e. work performed by the utility) with that of other trades

1.5 DRAWINGS

A. Drawings are generally diagrammatic and show the arrangement and location of fixtures, equipment and conduit. The Contractor shall carefully investigate the structural and finish conditions affecting his work and arrange his work accordingly. Should conditions on the job make it necessary to rearrange conduit or equipment, the Contractor shall so advise the Engineer and secure approval before proceeding with such work.

B. Where exact locations are required by equipment for stubbing-up and terminating conduit concealed in floor slabs, the Contractor shall request shop drawings, equipment location drawings, foundation drawings, and any other data required by him to locate the concealed conduit before the floor slab is poured.

C. Materials, equipment or labor not indicated but which can be reasonably inferred to be necessary for a complete installation shall be provided. Drawings and specifications do not undertake to indicate every item of material, equipment, or labor required to produce a complete and properly operating installation.

D. Locate pull boxes, panelboards, control pushbuttons, terminal cabinets, safety switches and such other apparatus as may require periodic maintenance, operation, or inspection, so that they are easily accessible. If such items are shown on the plans in locations which are found to be inaccessible, the Engineer must be advised of the situation before work is advanced to the point where extra costs will be involved.

E. All additional circuit connections to panelboards must be preapproved by the Engineer.

F. The location, arrangement and extent of equipment, devices, conduit, and other appurtenances related to the installation of electrical work shown on drawings are approximate. The Contractor shall not scale drawings but shall refer to the architectural drawings for exact dimensions of building components. Should a conflict exist between the architectural and engineering drawings regarding dimensions and scale, the Contractor shall notify the Architect of the discrepancy.

G. Verify the ceiling type, ceiling suspension systems, and clearance above hung ceilings prior to ordering lighting fixtures. Notify the Engineer of any discrepancies.

H. Review all architectural drawings for door swings, cabinets, counters and built-in equipment.

1.6 OPERATION AND MAINTENANCE MANUALS

A. The Contractor shall prepare a minimum of two (2) instruction manuals, one of which shall be submitted to the Architect for the Engineer's review, describing installation, operation and maintenance of all Electrical equipment. Manuals shall include copies of control schematics, sequences of operation, indicate the function and operations of all components, as well as the Contractor's name, address, and telephone number. Manuals shall also contain one copy of all manufacturer's drawings, pamphlets, data, parts lists, and instruction manual for each piece of equipment. Upon approval, one copy shall be delivered to the Owner; one copy shall be kept by the Contractor. The pamphlets and drawings are to be neatly bound in a 3-ring binder(s).

1.7 AS-BUILT DRAWINGS

A. The Contractor shall maintain a record of all changes in the work from that shown in the Contract Documents. After all work is completed, the Contractor shall prepare a set of "as-built" reproducible drawings of similar type and quality as the Contract Drawings that reflect all changes and that accurately show actual final construction and deliver these drawings to the Architect.

1.8 EQUIPMENT, MATERIALS AND BID BASIS

A. Manufacturers' names, model numbers, etc. as specified on the drawings and herein are for the purpose of describing type, capacity, function and quality of equipment and materials required.

B. Unless "approved equal" is specifically stated, bids shall be based on equipment names in specifications or on drawings as "base" products.

C. "Equal product" and "approved equal" items listed shall conform to specified base items and shall be substantially equal in size, weight, construction and capacities. The "equal" equipment and materials shall be submitted as full equivalent to the equipment and materials specified, with sufficient supportive documentation and technical literature to demonstrate quality, performance, and workmanship without doubt or question. Submittals for "equal" products shall be made at least ten (10) days prior to bid (refer to the General Conditions of these specifications). The Engineer shall consider the use of the "equal" equipment based on the supportive documentation available to him and shall approve or disapprove any proposed alternates. The decision of the Engineer shall, in all cases, be final.

D. The Contractor shall coordinate the installation of all electrical equipment proposed for use in this project with all building trades (architectural, structural, mechanical, etc.). Coordination shall be accomplished prior to, and shall be reflected in, the submittal of shop drawings for approval. When substitution of equipment is made, the Contractor shall be responsible for the costs of any item and engineering and construction revisions necessary in his or any other contract or trade that may be required to satisfy the plans and specifications.

E. If substitutions are made in lieu of equipment specified, the manufacturer's literature shall be submitted to the Engineer for approval. In the case of lighting fixtures, full IES photometric test reports for the fixture, lamp(s), and lenses shall be submitted for approval.

1.9 SUBMITTALS

A. The Contractor shall prepare, submit, and obtain Engineer's review of manufacturers' submittals on the following equipment and systems prior to ordering, purchasing, or installation of any equipment or materials. All required submittals shall be transmitted simultaneously in hard ring binders with the associated specification section and the item submitted clearly identified. Partial submittals will be returned without review.

1. Submit a listing of all the materials indicated below, with the type of material, manufacturer and catalog or model number for each (where applicable):
   <u>Package #1 - Conductors Conduit</u>
   Multiconductor Cables Wiring Devices and Plates
   Disconnect Switches
   Time Switches
   Photocells
   Lighting Contactors
2. Submit complete shop drawings of the following when supplied by the electrical contractor:
   <u>Package #2 - Fuses and/or Circuit Breakers</u>
   Short Circuit and Coordination Study Switchboards
   Transformers
   Surge Protective Devices
   Motor Control Centers with typical schematic of starters Panelboards and Cabinets
   Cable Tray and Tray Fittings Busway
   <u>Package #3 - Lighting Fixtures</u>
   Occupancy Sensors
   Lighting Control Panels
   <u>Package #4 - Generator Set Transfer Switch</u>
   <u>Package #5 - Lightning Protection</u>
3. Submit test reports as required in section 3.7 - Electrical Testing.

B. All shop drawing approvals required by any code or enforcement authority, insurance underwriter, etc. shall be obtained prior to being submitted to the Engineer.

C. Review of shop drawings by the Engineer does not relieve the Contractor from responsibility for complying with all requirements of the Contract Documents. Furthermore, it shall be the responsibility of the Contractor to coordinate the requirements (roof penetrations, wall penetrations, floor penetrations, curbs, electrical, etc.) of all approved equipment with the other trades and disciplines at no additional cost.

D. All shop drawings shall be identified by the equipment mark or tag identification numbers shown on the Contract Drawings. Each individual submittal item shall be marked to show which specification section pertains to the item.

1.10 COORDINATION OF TRADES

A. The Contractor shall give full cooperation to other trades and shall furnish all information necessary to permit the work of all trades to be installed satisfactorily and with least possible interference or delay.
B. Work shall not be performed without first coordinating the installation of same with other trades. The Contractor, at his own expense, shall relocate all uncoordinated equipment installed should they interfere with the proper installation and mounting of mechanical equipment, ceilings and other architectural or structural finishes.
C. The Contractor shall coordinate the elevations of all equipment above ceilings and in exposed areas with the work of all other disciplines prior to installation.
D. In areas where more than one trade is required to use common openings in beams, joists, chases, shafts and sleeves for the passage of conduits, raceways, piping, ductwork and other materials, the Contractor must coordinate the positions of all piping and equipment to be furnished under this section so that all items including the materials and equipment of other trades may be accommodated within the space available.
E. The Contractor shall confirm that work installed under this section does not interfere with the clearances required for finished columns, pilasters, partitions, walls or other architectural or structural elements as shown on the Contract Documents.
F. Work that is installed under this Contract which interferes with the architectural design or building structure shall be removed and relocated as required at no additional cost to the Contract.

1.11 WARRANTY

A. All equipment furnished and installed under this Contract shall be provided with the manufacturer's standard warranty unless otherwise noted.
B. The Contractor shall make good all defects in material, equipment, or workmanship disclosed within a period of one (1) year from date of building acceptance by the Owner. The phrase "make good" shall mean to furnish promptly, without charge, all work necessary to remedy the defects to the satisfaction of the Engineer.

1.12 TEMPORARY LIGHT AND POWER

A. The Contractor shall provide a temporary service of the amperage and voltage required by the Project Manager.
B. Sufficient wiring, outlets and lamps shall be installed to ensure proper lighting in accordance with OSHA, state and municipal codes. Refer to Division 1 specifications for requirements.

1.13 EQUIPMENT REQUIRING ELECTRICAL SERVICE

A. Review all specification sections and drawings including mechanical, plumbing and other equipment drawings and other divisions of the specifications for equipment requiring electrical service. Provide service to and make connections to all such equipment requiring electrical service.
B. Prior to installing material such as electrical equipment, devices, feeders, or branch circuits serving equipment of all other trades, the Contractor shall coordinate with the electrical requirements of the equipment to be installed.

1.14 MECHANICAL SYSTEMS COORDINATION

A. All control wiring for mechanical systems shall be installed under Division 23.
B. Motor controllers (starters) shall be furnished under Division 23 and installed under Division 26, unless specified otherwise.
C. Power wiring to all motors and motor controllers and between motors and controllers shall be provided in Division 26.

D. Power wiring and connections to mechanical louvers shall be coordinated with the mechanical contractor and provided by the electrical contractor. Large louvers may require multiple actuators which will require multiple electrical connections to a single louver. Electrical contractor is responsible for making all required connections.

PART 2 - PRODUCTS

2.1 GENERAL REQUIREMENTS

A. All equipment, materials, accessories, etc. used shall be new and of current production unless specified otherwise. Equipment not specified in the Contract Documents shall be suitable for the intended use and shall be subject to approval by the Engineer.

B. All equipment, products and materials shall be free of defects and shall be constructed to operate in a safe manner without excessive noise, vibration, leakage, or wear.

C. All equipment shall bear the inspection label of Underwriters Laboratories Inc.

D. All equipment and material for similar applications or systems shall be provided from the same manufacturer unless noted otherwise.

E. The published standards and requirements of the National Electrical Manufacturers Association, the American National Standard Institute, the Institute of Electrical and Electronic Engineers, and the American Society of Testing Materials, are made a part of these specifications and shall apply wherever applicable.

2.2 IDENTIFICATION

A. Equipment or devices specified in the individual sections to be identified shall be identified by machine cut stencil unless the equipment is identified by the manufacturer. Identification of flush mounted cabinets and panelboards shall be on the inside of the device. Surface mounted equipment shall be identified on the outside cover. Equipment operating on 208Y/120-volt system shall be identified with black labels with white inner core, 480Y/277-volt equipment with white labels with black inner core, emergency systems with red labels with white inner core.

B. All switchboards and panelboards supplied by a feeder shall be stencil-labeled to indicate the equipment where the power supply originates.

C. All electrical outlets shall include a permanent label affixed to cover plate indicating panel and circuit designation serving the outlet.

2.3 SEISMIC CONTROLS

A. Provide seismic restraints for all equipment, including all structural steel members, inserts, anchors, wires, and the required assembly thereof. All seismic restraints shall be designed and constructed in accordance with all local codes and ordinances having jurisdiction. Systems shall maintain equipment and related systems in a captive position.

B. Furnish services of manufacturer for field supervision of installation of seismic restraint units, associated hangers and bases. Obtain a copy of manufacturer's installation instructions and drawings, for contractors' use during installation. Install devices in accordance with manufacturer's written instructions. Seismic restraint equipment shall not cause any change of position of equipment or wiring resulting in wiring stresses or misalignment.

C. Submit for review, shop drawings of every product and material furnished under this section. Shop drawings shall include:

1. Itemized list detailing electrical systems and components to be seismically restrained, associated seismic restraint system to be used, device loading and reference to specific drawings showing base and construction where applicable. List shall include number and location of seismic restraints and anchors for each piece of equipment.
2. Seismic restraint calculations.
3. Structural engineer's seal verifying design and calculations for seismic restraining systems. Certification shall be by a professional structural engineer with P.E. registration in the project state.
4. Detail drawings on equipment bases including dimensions, structural member sizes,

support point locations, maximum loading at each location, and concrete and steel details such as anchor bolt locations.

5. All seismic restraining devices shall have a pre-approved number from the project state OSHPD or other recognized government agency showing maximum restraint ratings.
6. Detail drawings on seismic restraint systems for conduit, busway, cable tray, and other wiring systems, including methods of suspension, support guides, and maximum loading at each location.

PART 3 - EXECUTION

3.1 GENERAL REQUIREMENTS

A. Mounting heights, unless otherwise noted, are to be center line of the equipment and/or device except the mounting height of suspended light fixtures which is to the bottom of fixture.
B. All work shall be designed and installed to comply with the requirements for the seismic design category and use group for the area in which the building is constructed.

3.2 EXCAVATION, TRENCHING & BACKFILLING

A. Contractor shall call underground utilities locator company before digging.
B. Barricades shall be provided around open holes and trenches. Temporary bridges shall be provided over trenches cut through major sidewalk routes. Major sidewalk routes shall not be closed to pedestrian traffic.
C. Barriers shall be provided to protect landscaping adjacent to the excavation area.
D. When rocks, concrete or other debris are encountered during excavation, remove completely.
E. Where sidewalk sections must be removed for installation of underground ducts, remove the sidewalk sections completely from joint to joint.
F. Where asphalt must be removed for installation of underground ducts, saw cut the asphalt in two, straight, parallel lines.
G. Backfill excavations in 6-inch layers and mechanically compact to 98 percent compaction.
H. Excavated materials may be used as backfill only if the backfill is sand or clean dirt that is free of rocks and debris over 3/4" in diameter.
I. In landscaped areas, backfill and mechanically compact to a depth of 6 inches below grade.
J. Backfill the last 6 inches with clean topsoil. Reseed lawn areas.
K. Restore concrete sidewalks and asphalt.
L. The Contractor shall perform all excavation to install the work herein specified and as indicated on drawings. During excavation, material for backfilling shall be piled back from the banks of the trench to avoid overloading and to prevent slides and cave-ins. All excavated materials not to be used for backfilling shall be removed and disposed of by the Contractor. Grading shall be done to prevent surface water from flowing into trenches and others excavation and any water accumulating therein shall be removed by pumping. All excavation shall be made by open cut. No tunneling shall be done except under pavement.
M. The bottom of the trenches shall be graded to provide uniform bearing and support for conduits, cables, or duct bank on undisturbed soil at every point along its entire length. Over depths shall be backfilled with loose, granular, moist earth, and tamped. Remove unstable soil that is not capable of supporting equipment or installation and replace with specified material for a minimum of 12" below invert of equipment or installation.
N. The trenches shall be backfilled with the excavated materials approved for backfilling, consisting of earth, loam, sandy clay, sand and gravel or soft shale, free from large clods of earth and stones, deposited in 6" layers and tamped until the crown of the pipe is covered by a minimum of 6" of tamped earth. The backfill under and beside the pipe shall be compacted for pipe support. Backfill shall be brought up evenly on both sides of the pipe so that the pipe remains aligned. In instances where the manufacturer's installation instructions for materials are more restrictive than those prescribed by the code, the material shall be installed in accordance with the more restrictive requirement. The backfilling shall be carried on simultaneously on both sides of the trench so that injurious pressures do not occur. The compaction of the filled trench shall be at least equal to 98% of the maximum density as determined by the Standard Proctor Test. Settling the backfill with water will not be permitted.

Reopen any trenches not meeting compaction requirements or where settlement occurs, refill, compact, and restore the surface to the grade and compaction indicated, mounded over and smoothed off. A metallic lined underground warning tape shall be provided 12" below finished grade. The tape shall be red for electrical lines and orange for telephone and shall be identified as to the type of line.

O. Perform excavation and backfilling work in accordance with applicable portions of the earthwork section.

3.3 STORAGE AND PROTECTION OF MATERIALS

A. Refer to the general requirements section of the specifications, Division 1, for storage, protection, and handling requirements.
B. Inspect materials upon arrival at project and verify conformance to Contract Documents. Prevent unloading of unsatisfactory material.
C. Store packaged materials in original undamaged condition with manufacturer's labels and seals intact.
D. Containers which are broken, opened, watermarked, or otherwise damaged materials are unacceptable and shall be removed from premises.
E. Equipment and materials shall not be installed until such time as the environmental conditions of the job site are suitable to protect the equipment or materials. Equipment or materials damaged, or which are subjected to these elements are unacceptable and shall be removed from the premises and replaced.

3.4 CONCRETE WORK

A. Construct curbs, pads, vaults and similar supports for electrical equipment where required.
B. Provide 4" thickness housekeeping pads at floor mounted equipment, covering entire area occupied by equipment. Dowel pads to structural slab.
C. Perform concrete work in accordance with applicable portions of Concrete sections. Minimum compressive strength of concrete shall be same as specified for slabs on grade.

3.5 PAINTING

A. Except as otherwise specified, painting shall be accomplished under Painting Section. Surfaces shall be left clean of debris and free from oil and other substances which would prevent paint bond.
B. Touch up finishes of factory painted apparatus where finish is marred during installation.
C. Where galvanizing is broken during fabrication or installation, recoat exposed areas with cold galvanizing compound.
D. Do not paint over nameplates on equipment, nonferrous hardware, accessories or trim.

3.6 WORKMANSHIP

A. Install systems, materials and equipment level and plumb, parallel and perpendicular to other building systems and components.

3.7 ELECTRICAL TESTING

A. Furnish all labor, materials, instruments, supplies, and services and bear all costs for the accomplishment of the tests herein specified or requested at job site. Correct all defects appearing under test, and repeat the tests until no defects are disclosed, leave the equipment clean and ready for use.
B. All grounds, crosses, shorts, etc., must be eliminated from the wiring. Test all lighting fixtures, together with switches and controls; test the operation of all motors, controllers, and other electrical equipment devices.
C. The switchboard and all feeders shall be Meggar tested. A copy of all test reports shall be given to the Engineer.
D. The Contractor shall perform any tests other than herein specified which may be required by the Engineer or the authority having jurisdiction.
E. Perform the following tests after installation but before energizing the equipment. The following

tests and procedures apply to all equipment and material that is to be tested under this Contract.

1. Transformers
   a. Visually inspect all components for damage, check bushings and insulators for cracks; transformer casing for evidence of leakage; pressure, temperature and liquid level gauges for proper indications.
2. Ground Resistance
   a. Visually inspect for specified ground connections.
   b. Perform ground resistance test at all connections to switchboards and panelboards.
   c. Use three point or fall of potential method.
   d. Verify single point connection (at the counterpoise) between the grounded and grounding systems.
   e. Additional ground rod is required if resistance is greater than 25 ohms.
3. Switchboards and Panelboards
   a. Visually inspect all components for damage.
   b. Check operation of circuit breakers/fusible switches.
4. Ground Fault Systems
   a. Visually inspect for damage and improper connections.

5. Transfer and Other Relay Schemes
   a. Investigate intended function and verify correct operation.

F. The Engineer shall be notified immediately of any unfavorable test results or indication of faulty equipment. No piece of equipment shall be energized until the test data is evaluated and the equipment is proven acceptable.

G. If the test and inspection data submitted should indicate deficiencies in the operation of the electrical apparatus or in the manufacturer thereof, the Contractor shall promptly implement the necessary adjustments, corrections, modifications and/or replacements necessary to meet the specified requirements.

3.8 TRAINING

A. Upon completion of the work, the Contractor shall conduct operation and training session(s) for the Owner's key personnel. These sessions shall be of sufficient length and duration to adequately explain the design intent and proper operating and maintenance techniques for all equipment and systems. After these sessions are completed, the Contractor shall provide a copy of a signed statement by the Owner that his personnel are thoroughly familiar with and capable of operating all equipment and systems.

END OF SECTION 26 00 00

SECTION 26 0519 – CONDUCTORS

PART 1 - GENERAL

1.1 GENERAL REQUIREMENTS

A. All work specified herein shall be accomplished in accordance with the applicable requirements of Section 26 0000 - Electrical General.

1.2 WORK INCLUDED

A. The work under this section shall include all labor, materials, accessories, services and equipment necessary to furnish and install conductors, complete, as indicated on the Drawings and as specified herein. Provide a complete system of wiring with all feeders and branch circuits as shown on the Drawings. The wiring system shall be complete to each and every outlet and apparatus shown on the Drawings which requires electrical connections.

B. This section includes wires, cables, and connectors for power, lighting, signal, control and related systems rated 600 volts or less.

1.3 COLOR CODING

A. Color coding shall be as follows:

120/208 Volt System
Phase A –Black
Phase B – Red
Phase C – Blue
Neutral – White
Ground – Green
Isolated Ground - Green with yellow strip (where applicable)

(Verify color-coding with local code Authority and use local code requirements if and only if the above color code is not acceptable to local authority.)

B. All wire shall be color coded throughout its entire length. Colored phase tape is not allowed.

PART 2 - PRODUCTS

2.1 MANUFACTURERS

A. Acceptable Manufacturers: Wire shall be Southwire/SIMpull™, Pirelli, Rome, General Cable, Senator, United Copper Industries, Alcan, AFC, or approved equal.

2.2 CONDUCTORS

A. Conductor Material: Unless noted otherwise, conductors shall be copper, 98.5% conductivity except where specifically noted otherwise on Drawings.

B. All wire and cable for feeders and branch circuits shall have copper conductors and shall be 600 volts, 90 degrees C, NEC type conductors with THHN/THWN-2 insulation.

C. Wire No. 8 AWG and larger shall have stranded conductors. Wire No. 10 AWG and smaller shall be solid conductor type.

D. No conductor shall be smaller than No. 12 AWG unless otherwise specified or noted.

E. Branch circuit wiring which supplies more than one fluorescent fixture through the wiring of other fixtures shall be high temperature wire approved for such use.

F. Pulling lubricant is neither required nor allowed for Southwire/SIMpull™ conductors.

2.3 ALUMINUM CONDUCTORS

A. Where substituted for copper conductors, aluminum conductors shall match or exceed copper ampacity.

B. Aluminum conductors shall be compact, Alcan, or Southwire. Conductors shall be AA-8000 series.

C. Aluminum conductors shall not be used for branch circuits and shall not be installed to any vibrating equipment (e.g. mechanical equipment, transformers, elevators, fire pumps). Minimum rating of feeder size shall be 100 amps.
D. Mechanical screw-type connectors shall comply with the following:
   1. Connectors shall be dual rated (AL7CU or AL9CU) and listed by UL for use with aluminum and copper conductors and sized to accept aluminum conductors of the ampacity specified.
   2. Using a suitable stripping tool, to avoid damage to the conductors, remove insulation from the required length of the conductor.
   3. Wire brush the conductor and apply a listed joint compound.
   4. Tighten the connection per the connector manufacturer's recommendation.
   5. Wipe off any excess joint compound.
E. For connection to aluminum bus, the following hardware shall be used:
   1. Bolts: Anodized alloy 2024-T4 and conforming to ANSI B18.2.1 and to ASTM B211 or B221 chemical and mechanical property limits.
   2. Nuts: Aluminum alloy 6061-T6 or 6262-T9 and conforming to ANSI B18.2.2.
   3. Washers: Flat aluminum alloy 2024-T4, Type A plain, standard wide series conforming to ANSI B27.2.
   4. Lubricate and tighten the hardware as per the manufacturer's recommendations.
F. For connection to copper bus, the following hardware shall be used:
   1. Bolts: Plated or galvanized medium carbon steel; heat treated, quenched and tempered equal to ASTM A-325 or SAE grade 5.
   2. Nuts: Heavy semi-finished hexagon, conforming to ANSI B18.2.2, threads to be unified coarse series (UNC), class 2B.
   3. Washers: Should be steel, Type A plain standard wide series conforming to ANSI B27.2.
   4. Belleville conical spring washers: shall be of hardened steel, cadmium plated or silicone bronze.
   5. Lubricate and tighten the hardware as per the manufacturer's recommendations.
G. Aluminum conductors shall not be used where expressly forbidden by the local electrical inspections department or plan review board of jurisdiction. The electrical contractor shall verify this requirement prior to bid.
H. Aluminum conductors shall not be connected to equipment which is not UL Listed for aluminum.

2.4 METAL CLAD "MC" CABLE

A. Where allowed by the authority having jurisdiction, the use of metal clad cable is permitted as described below and shall meet all the requirements of the following codes and standards:
   1. Underwriters Laboratories Inc. 83, 1479, 1569, and 1581
   2. National Fire Protection Association NFPA 70, Article 330
   3. All local codes and municipal ordinances.
B. The conductors of the metal clad cable shall comply with Articles 1.3 and 2.2 of this same section.
C. Unless noted otherwise on drawings, MC cable shall be limited to branch circuits concealed in walls, and above ceilings. For MC cable circuits powered from a surface-mounted panelboard, cable homeruns shall be installed to a metal wireway above the panelboard, and conductors (without armor) shall be routed within metal conduit(s) from wireway to panelboard. Ampacity adjustment factors are not necessary for conduit lengths of 24" or less.
D. MC cable shall not be allowed for wiring to mechanical equipment.
E. Unless noted otherwise, the metal clad cable shall be with either a galvanized steel jacket, a Mylar assembly covering tape, rated at 90 degrees centigrade, with either a green insulated grounding conductor or MC^{AP} Type MC cable with interlocked armor that is listed and identified for grounding, and rated for a maximum of 600 volts.
F. Refer to National Electrical Code Article 330 for uses not permitted.
G. Cables installed in other than vertical runs through bored or punched holes in wood or metal framing members, or through notches in wooden framing members and protected by a steel plate at least 1/16 inches thick, shall be considered supported and secured where such

support does not exceed six (6) feet intervals.

H. Cables containing four or fewer conductors sized not larger than No. 10 AWG shall be secured within 12 inches of every box, cabinet, fitting or other cable termination.

I. Metal clad cable shall not be installed outside the building without written authorization from the Engineer.

2.5 ACCESSORIES

A. Wire Joints: T & B “Sta-Kon,” Scotchlok Type “R,” Ideal No. 452 or 453, or Buchanan “B-Cap.”

B. Cable Connectors: Solderless Type O.Z. “circular clamp type” or T & B “lock-tite” appropriate for the application involved.

PART 3 - EXECUTION

3.1 PREPARATION

A. Lubricant: No grease, oil or lubricant other than powdered soapstone or approved pulling compound shall be used to facilitate the pulling of wires. Lubricant shall not be used for conductors with SIMpull™ insulation.

3.2 INSTALLATION

A. Complete electrical systems shall be provided as shown on the Drawings and/or as specified herein.

B. Wires shall be pulled without excessive strain to prevent damage to conductor or insulation. Provide pull boxes as required to facilitate pulling of wire.

C. Prior to energizing, all service and feeder cables shall be tested with megohm meter to determine insulation resistance levels. Test report shall be submitted to the Engineer.

D. Each raceway indicated by symbol on Drawings shall contain three (3) No. 12 AWG wires unless otherwise noted, scheduled or indicated. Hatch marks on raceway symbols indicate the number of conductors in a raceway when the number exceeds three (3).

E. At each fixture or device outlet, a loop or end of wire not less than 6" long shall be left for connection to fixture or device.

F. Splices, taps and connections shall be made up as follows:

1. Wire sizes No. 10 AWG and smaller with wire nuts.
2. Wire and cable of sizes No. 8 AWG and larger, with insulated mechanical or crimped connectors.

G. Perform conductor tests as described in Section 26 0000 - Electrical General.

END OF SECTION 26 05 19

SECTION 26 05 26 GROUNDING

PART 1 - GENERAL

1.1 DESCRIPTION

A. The work required under this section of the Specifications consists of furnishing, installation and connections of the building grounding system. Exterior branch circuit wiring and feeder conductors extended beyond the building are included. The building electrical system shall be 3-phase, 4-wire grounded wye system supplemented with equipment grounding system. Equipment grounding system shall be established with equipment grounding conductors; the use of metallic raceways for equipment grounding is not acceptable.

1.2 REGULATORY REQUIREMENTS

A. Install a complete grounding system in accordance with the National Electrical Code.

PART 2 - PRODUCTS

2.1 GENERAL REQUIREMENTS

A. Provide all materials under this section of the specifications.

B. All materials shall be new, UL Listed, and bear a UL Label.

C. Refer to Section 26 0519 - Conductors for conductor specification.

2.2 GROUNDING CONDUCTORS

A. Grounding electrode conductor shall be bare or green insulated copper conductor sized as indicated on the Drawings.

B. Equipment grounding conductors shall be green insulated conductors sized as indicated on the Drawings. Where size is not indicated on the Drawings, conductor size shall be determined from the National Electrical Code table on sizes of equipment grounding conductors.

C. Bonding jumpers shall be flexible copper bonding jumpers sized in accordance with the National Electrical Code tables for grounding electrode conductors.

2.3 PANELBOARDS, TRANSFORMERS, AND DISCONNECT SWITCHES

A. Provide each low voltage distribution and branch circuit panelboard with a copper equipment grounding bar brazed or riveted to the associated enclosures or cabinet and an insulated neutral bar.

B. Provide a conductor termination grounding lug bonded to the enclosure of each equipment item.

2.4 DEVICES

A. Each receptacle and switch device shall be furnished with a grounding screw connected to the metallic device frame.

2.5 GROUND RODS

A. Ground rods shall be 3/4" x 10'-0" copper clad steel.

PART 3 - EXECUTION

3.1 INSTALLATION

A. Ground all non-current carrying parts of the electrical system including raceways, equipment frames and enclosures, outlet boxes, junction boxes, and other conductive material in close proximity with electrical circuits.

B. Service entrance and separately derived electrical systems, grounding electrode system
   1. The grounded conductor(s) of the electrical service serving the premises wiring system shall be connected to the neutral bus bar in the service equipment which shall be grounded to the cold-water system, the ground rod system, and other grounding electrodes specified herein or indicated on the Drawings. Grounding electrode conductors shall be installed rigid, nonmetallic conduit to point of ground connection, unless subject to physical damage in which case it shall be installed in galvanized rigid steel.
   2. Make connection to main water line entering the building. Make connections ahead of any valve or fittings whose removal may interrupt ground continuity.
   3. Bond together the following systems to form the grounding electrode system. All system connections shall be made to the electrodes as close as possible to the service entrance equipment and each connected at the service entrance equipment neutral bus. Do not connect electrode systems together except at neutral bus.
      a. Cold water piping system
      b. Ground rod system
      c. Rebar in concrete footing
      d. Structural steel metal building frame
      e. Lightning protection system
   4. Ground the neutral of all dry type transformers to either building steel or a common grounding electrode conductor connected to a service ground. Transformers shall be bonded to the nearest available point on the interior water piping system. In reinforced concrete structures building steel shall be considered to be reinforcing steel of vertical columns.
   5. Grounding electrode connections to structural steel, reinforcing bars, ground rods, or where indicated on the Drawings shall be with chemical exothermic weld connection devices recommended for the connection type. Connections to piping shall be with UL Listed mechanical ground clamps.
   6. Where there is more than one service to a building or interconnected buildings, services shall be connected by means of a grounding electrode conductor.
   7. Bonding shall be in accordance with the National Electrical Code.
   8. Install ground rods where indicated on the Drawings with the top of the ground rods 12 inches below finished grade.
   9. Ground the neutral and frame of the emergency generator to building steel and the main electrical service ground rod system. In reinforced concrete structures building steel shall be considered to be reinforcing steel or vertical columns. Make connection to building steel with chemical weld type connector, in a location in unfinished space where the connection will not be subject to physical abuse.
   10. Generator ground and neutral connections shall be bonded together.

C. Equipment Grounding Conductor
   1. Grounding conductors for branch circuits are not shown on the Drawings; however, grounding conductors shall be provided in all branch circuit raceways and cables.
   2. Grounding conductors for feeders are typically indicated on the Drawings and the raceway is sized to accommodate grounding conductor shown. Where grounding conductor size is not indicated on the Drawings, conductor shall be in accordance with the equipment grounding conductor table of the National Electrical Code.

D. Other Grounding Requirements
   1. Each telephone backboard shall be provided with a No. 6 grounding conductor. When backboard is in vicinity of electrical service equipment, the “point of grounding” of

      this conductor shall be the main cold-water service with connections made ahead of any valves or joints. Remote backboards shall use building steel as “point of ground.” Terminate conductor by stapling to backboard.
   2. At each building expansion joint flexible copper bonding jumpers shall be attached to building structure by chemical weld process. Install bonding jumpers in concealed

locations that will not subject connections or jumpers to physical abuse. Install 100' on centers across expansion joints.

3.2 TESTING

A. Upon completion of the ground rod installation, the Contractor shall test the installation in accordance with the “Electrical Testing” section of Section 26 0000 - Electrical General. Grounding resistance reading shall be taken before connection is made to the building cold water piping system. Ground resistance readings shall not be taken within 48 hours of rainfall.

END OF SECTION 26 05 26

SECTION 26 05 29 - HANGERS AND SUPPORTS FOR ELECTRICAL SYSTEMS

PART 1 - GENERAL

1.1 REFERENCE STANDARDS

A. NECA 1 - Standard for Good Workmanship in Electrical Construction; National Electrical Contractors Association; 2010.

B. NEC; Most Recent Edition Adopted by Authority Having Jurisdiction, Including All Applicable Amendments and Supplements.

1.2 SUBMITTALS

A. Product Data: Provide manufacturer's catalog data for fastening systems.

1.3 QUALITY ASSURANCE

A. Conform to requirements of NEC.

PART 2 - PRODUCTS

2.1 MANUFACTURERS

A. ERICO International Corporation: www.erico

B. Thomas & Betts Corporation: www.tnb.com.

C. Threaded Rod Company: www.threadedrod.com.

D. Unistrut; Tyco International. Ltd: www.unistrut.com.

E. Other approved equal.

2.2 MATERIALS

A. Hangers, Supports, Anchors, and Fasteners - General: Corrosion-resistant materials of size and type adequate to carry the loads of equipment and conduit, including weight of wire in conduit.

B. Supports: Fabricated of structural steel or formed steel members.

C. Anchors and Fasteners:

1. Concrete Structural Elements: Use precast inserts, expansion anchors, powder-actuated anchors, or preset inserts.
2. Steel Structural Elements: Use beam clamps, steel spring clips, steel ramset fasteners, or welded fasteners.
3. Concrete Surfaces: Use self-drilling anchors or expansion anchors.
4. Hollow Masonry, Plaster, and Gypsum Board Partitions: Use toggle bolts or hollow wall fasteners.
5. Solid Masonry Walls: Use expansion anchors.
6. Sheet Metal: Use sheet metal screws.
7. Wood Elements: Use wood screws.

D. Formed Slotted Steel Channel: Comply with MFMA-4 factory fabricated components for field assembly.

1. Product: Steel slotted support system manufactured by Unistrut; Tyco International, Ltd.

PART 3 - EXECUTION

3.1 INSTALLATION

A. Provide seismic restraints.

3.2 FIRESTOPPING

A. Apply firestopping to cable and raceway penetrations of the rated floor and wall assemblies to achieve fire resistance rating of the assembly.

END OF SECTION 26 05 29

SECTION 26 0530 - FIRESTOPPING FOR ELECTRICAL SYSTEMS

PART 1 - GENERAL

1.1 GENERAL REQUIREMENTS

A. Applicable requirements of Division 26 shall be considered a part of this section and shall have the same force as if printed herein full.

B. This document describes the products and execution requirements relating to Firestopping for Electrical Systems.

C. Product specifications, general design considerations, and installation guidelines are provided in this document. Typical firestopping installation details will be provided on Drawings as an attachment to this document. If the bid documents are in conflict, the Drawings shall take precedence. The successful Contractor shall meet or exceed all requirements described in this document.

1.2 WORK INCLUDED

A. The work included under this Specification consists of furnishing all labor, equipment, materials, supplies and performing all operations necessary to complete the installation. The Contractor will provide and install all the required material whether specifically addressed in the Specification or not.

B. The work shall include, but not be limited to the following:

1. Furnish and install all Firestopping Materials.

PART 2 - PRODUCTS

2.1 APPROVED PRODUCTS

A. Approved Firestopping manufacturer(s)

1. FlameStopper Thru-Wall Fitting - Wiremold Company (Firestop Devices)
2. Tremco Inc. (Firestop Cast in Place Sleeves, Caulks, QuickComm Sleeves, QuickComm Units, Pillows, Putty Pads, Outlet Box Inserts, Silicone, Composite Sheets, Collars, Devices)
3. STI Firestop Products (Firestop Devices, Putties, Caulks, Sealants, etc.)
4. Hilti (Putties, Caulks, Sealants, etc.)

2.2 TYPES OF PRODUCTS

A. Firestop Products

1. Intumescent Firestop Sealants and Caulks
2. Acrylic Firestop Sealant and Caulks
3. Silicone Firestop Sealants and Caulks
4. Cast in Place Devices
5. Firestop Putty, Putty Pads
6. Outlet Box Inserts
7. QuickComm Sleeves
8. TREMstop Straps
9. Firestop Collars
10. Wrap Strips
11. Firestop Mortar
12. Firestop Pillows
13. Accessories: Forming/Damming Materials: Mineral Wool, Backer Rod or other type as per manufacturer recommendation.

B. Firestop Devices

1. Thru-Wall Fitting (FlameStopper by Wiremold)
   a. The firestop device box shall be constructed of 16-gauge G90 steel.
   b. The firestop device intumescent block shall be constructed of a graphite base material with expansion starting at 375 degrees F and an unrestrained expansion between 6 to 12 times. The intumescent block shall be held securely by the box to prevent tampering and damage during installation.
   c. The firestop device shall have doors which can be adjusted to prevent materials from penetrating the device if the device is empty or completely full. The doors shall be

constructed of 16-gauge G90 steel with No. 10-32 screws use to adjust opening size.
d. The firestop device shall be available for 2" and 4" trade size EMT conduit.
e. The firestop device shall be available in safety yellow powder coat, custom colors and an unpainted galvanized finish.
2. Fire Rated Cable Pathway (STI EZ-PATH)
a. Fire rated cable pathway device modules shall be comprised of steel raceway with intumescent foam pads allowing 0 - 100% cable fill.
3. Tremco (QuickComm Unit) 24" x 12" or 34" x 18"
a. Fire rated steel frame with an intumescent channel. UL Tested for large openings with 100% visual cable fill. UL Tested for Concrete Floors, Block Walls, Dry Walls and Hollow Core Floors.
4. Tremco (QuickComm Sleeve)
a. Fire rated steel sleeve with an intumescent inner sleeve. UL Tested for Concrete Floors, Block Walls, Dry Walls, Hollow Core and Fluted Decks.

2.3 UL CLASSIFICATION

A. Thru-Wall Fitting: The firestop device for use in through-penetration firestop systems shall have been examined and tested by Underwriters Laboratories Inc. to UL1479 (ASTM E 814 & ASTM E 84).
B. Threaded, Smooth and Split-Sleeve Firestop Devices: Firestopping sealants and devices shall be used together as a firestop system. All firestop systems shall bear a UL Classification system number.
C. QuickComm Sleeve: Firestop Sleeve for use in through penetration firestop systems. Shall be tested by Underwriters Laboratories Inc. or a recognized Testing Laboratory for through penetration fire stopping applications.
D. QuickComm Unit: Intumescent Firestopping Unit for use in large openings for firestopping for cables, Fiber optic, Power Control, Telecommunications
1. Threaded Firestop System
a. Block Wall - W-J-3049
b. Dry Wall - W-L-3138
2. Threaded Firestop System (Vertical)
a. Slab - F-A-3010
3. Smooth Firestop System
a. Block Wall - W-J-3048
b. Dry Wall - W-L-3137
4. Split-Sleeve Firestop System
a. Block Wall - W-J-3047
b. Dry Wall - W-L-3136
5. Tremco QuickComm Sleeve
a. Block Wall- C-AJ-0123, C-AJ-2580, C-AJ-3270 b. Dry Wall- WL-0025, WL-2418, WL-3318
c. Concrete Floor- C-AJ-0123, C-AJ-2580, C-AJ-3270
d. Fluted Deck- C-AJ-0123
e. Hollow Core- C-AJ-0123, C-AJ-2580, C-AJ-3318
6. Tremco QuickComm Unit
a. Dry Wall- WL-3319, WL-4070
b. Concrete Floor- F-A-3035, F-A-4006

2.4 FIRESTOPPING SYSTEMS

A. Thru-Wall Fitting Firestop System
1. The device shall be classified for use in one-, two-, three-, and four-hour rated gypsum, concrete and block walls and provide an L rating of less than 5 cfm. The device shall also be tested by Underwriters Laboratories Inc. to UL2043 and determined to be suitable for use in air handling spaces.
B. Threaded, Smooth and Split-Sleeve Firestop Systems
1. Shall conform to both Flame (F) and Temperature (T) ratings as required by local building codes and as tested by nationally accepted test agencies per ASTM E814 and ASTM E 84 (UL 1479) fire tests in a configuration that is representative of field conditions.

2. The F rating must be a minimum of one (1) hour but not less than the fire resistance rating of the assembly being penetrated. T rating when required by code authority shall be based on measurement of the temperature rise on penetrating item(s). The fire test shall be conducted with a minimum positive pressure differential of 0.01 inches of water column.

C. Firestopping materials and systems must be capable of closing or filling through-openings created by the burning or melting of combustible pipes, cable jacketing, or pipe insulation materials.
D. Firestopping material shall be asbestos and lead free and shall not incorporate nor require the use of hazardous solvents.
E. Firestopping sealants must be flexible, allowing for normal pipe movement.
F. Firestopping materials shall not shrink upon drying as evidenced by cracking or pulling back from contact surfaces.
G. Firestopping materials shall be moisture resistant and may not dissolve in water after curing.
H. Firestopping material shall be installed inside the cavity of the wall as shown by the annular space requirements in the UL Tested System.

PART 3 - EXECUTION

3.1 CONDITIONS REQUIRING FIRESTOPPING

A. General
1. Provide firestopping for conditions specified whether firestopping is indicated, and if indicated, whether such material is designed as insulation or otherwise.

B. Through-Penetrations
1. Firestopping shall be installed in all open penetrations and in the annular space in all penetrations in any bearing or non-bearing fire-rated barrier.

C. Membrane-Penetrations
1. Where required by code, all membrane-penetrations in rated walls shall be protected with firestopping products that meet ASTM E 814 and ASTM E 84 Test requirements.

D. Smoke-Stopping
1. As required by the other sections, smoke-stops shall be provided for through-penetrations, membrane-penetrations, and construction gaps with a material approved for the ASTM E 136 Standards.

3.2 EXAMINATION

A. Examine the areas and conditions where firestops are to be installed and notify the Architect of conditions detrimental to the proper and timely completion of the work. Do not proceed with work until unsatisfactory conditions have been corrected.
B. Verify that environmental conditions are safe and suitable for installation of firestop products.
C. Verify that all pipes, conduit, cable, and other items that penetrate fire-rated construction have been permanently installed prior to installation of firestops.

3.3 INSTALLATION

A. General
1. Through Penetration firestop submittals showing each UL Rated Assembly shall be in the general Contractor's trailer for Inspection purposes.
2. Installation of firestops shall be performed by an applicator/installer qualified and trained by the manufacturer. Written documentation stating training done on the specific project shall be supplied to the General Contractor for inspection purposes. Installation shall be performed in strict accordance with manufacturer's detailed installation procedures.
3. Apply firestops in accordance with UL Tested Systems, fire resistance requirements, acceptable sample installations, and manufacturer's recommendations.
4. Unless specified and approved, all insulation used in conjunction with through-penetrants shall remain intact and undamaged and may not be removed.
5. Seal holes and penetrations to ensure an effective smoke seal. In areas of high traffic, protect firestopping materials from damage. If the opening is large, install firestopping materials capable of supporting the weight of a human.
a. Insulation types specified in other sections shall not be installed in lieu of firestopping material specified herein.

b. All combustible penetrants (e.g. non-metallic pipes or insulated metallic pipes) shall be fire-stopped using products and systems tested in a configuration representative of the field condition.

B. Dam Construction

1. When required to properly contain firestopping materials within openings, damming or packing materials may be utilized. Combustible damming material must be removed after appropriate curing. Noncombustible damming materials may be left as a permanent component of the firestop system.

3.4 FIELD QUALITY CONTROL

A. Preconstruction meeting shall take place to address firestopping systems to be installed.
B. Prepare and install firestopping systems in accordance with UL Tested System and manufacturer's printed instructions and recommendations.
C. Follow safety procedures recommended in the Material Safety Data Sheets.
D. Finish surfaces of firestopping that are to remain exposed in the completed work to a uniform and level condition.
E. All areas of work must be accessible until inspection by the applicable Code Authorities.
F. Correct unacceptable firestops and provide additional inspection to verify compliance with this Specification.

3.5 CLEANING

A. Remove spilled and excess materials adjacent to firestopping without damaging adjacent surfaces.
B. Leave finished work in a neat and clean condition with no evidence of spillovers or damage to adjacent surfaces.

END OF SECTION 26 05 30

SECTION 26 05 33 - CONDUIT AND RACEWAYS

PART 1 - GENERAL

1.1 GENERAL REQUIREMENTS

A. This section covers the complete interior and exterior conduit system.

B. All work specified herein shall be accomplished in accordance with the applicable requirements of Section 26 0000 - Electrical General.

1.2 STANDARDS

A. Industry Standards
1. Underwriters Laboratories Inc. (UL)
   Publications No. 1: Standard for Flexible
   Metal Conduit No. 6: Standard for Rigid
   Metal Conduit
   No. 467: Standard for Grounding and Bonding Equipment
   No. 651: Standard for Schedule 40 and 80 Rigid PVC
   Conduit No. 797: Electrical Metallic Tubing - Steel
   No. 1242: Standard for Electrical Intermediate Metal Conduit - Steel
2. American National Standards Institute
   (ANSI) C-80.1: Rigid Galvanized Conduit
   C-80.3: Electrical Metallic Tubing

1.3 WORK INCLUDED

A. The work under this section shall include all labor, materials, accessories, services and equipment necessary to furnish and install conduits and raceways, complete, as indicated on the Drawings and as specified herein.

B. Other manufacturers of equal quality and performance may be submitted to the Engineer for review. When substitution of equipment is made, the Contractor shall be responsible for the costs of any item and engineering and construction revisions necessary in his or any other contract or trade that may be required to satisfy plans and specifications.

PART 2 - PRODUCTS

2.1 MANUFACTURERS

A. Approved Manufacturers
1. Metallic Conduit Fittings
   a. Thomas and Betts
   b. Appleton
   c. RACO
   d. Crouse Hinds
   e. Steel City
2. Support Channel
   a. Unistrut
   b. Kindorf
3. Non-metallic Conduit Fittings
   a. Carlon
   b. Georgia Pipe Company
4. Rigid, IMC or Flexible Conduit
   a. Allied
   b. Republic
   c. Triangle
   d. Wheatland

e. Youngstown
f. Southwire

5. Flexible Conduit (PVC Conduit)
   a. Anaconda “Sealtite”
   b. Robroy
   c. Southwire
6. Electrical Metallic Tubing
   a. Steeltubes
   b. National
   c. Wheatland
   d. Allied
   e. Triangle
   f. Youngstown
7. Plastic PVC
   a. Carlon
   b. Georgia Pipe Company
8. Pull Box Manufacturer(s)
   a. Hoffman
   b. OZ Gedney
   c. Or Approved Equal
9. Approved Marker Tape Manufacturer(s)
   a. William Frick & Associates
   b. Or Approved Equal
10. Approved Maintenance Hole/Handhole Manufacturer(s)
    a. Old Castle
    b. Pencell (Handholes Only)
    c. Quazite (Handholes Only)
    d. Or Approved Equal
11. Approved Conduit Plug/Cap Manufacturer(s)
    a. Jack Moon
    b. Or Approved Equal

2.2 CONDUIT FITTINGS

A. Electrical metallic tubing (EMT) couplings and connectors shall be steel. Malleable iron, pressure cast or die cast fittings are not permitted.

B. Fittings and couplings shall be set-screw type and/or compression type per 3.1 13. Steel set screw type for 2.5" conduit and larger shall have 2 screws for connectors and 4 screws for couplings. All connectors shall be insulated throat type.

C. Rigid steel and IMC couplings and connectors shall be standard threaded couplings, locknuts, bushings and elbows. All materials shall be steel. Erickson-type couplings may be used to complete a conduit run.

2.3 NON-METALLIC CONDUIT AND FITTINGS

A. Non-metallic conduit shall be heavy wall, Schedule 40 PVC.

B. Couplings and connectors for non-metallic conduit shall be of the same material and be the product of the same manufacturer of the conduit furnished.

C. PVC conduit for concrete encasement shall be Type DB, UL Labeled for 90 degrees C cables. Fittings shall be Type DB, solvent type, and from the same manufacturer as the conduit.

D. Concrete shall have a minimum strength of 2,500 psi at 28 days.

2.4 CONDUIT SUPPORT

A. Individual conduit hangers shall be galvanized spring steel specifically designed for the purpose and sized appropriately for the conduit type and diameter. Support individual conduits 1-1/2" and smaller with 1/4" threaded steel rods and use 3/8" rods for 2" and larger.

B. Conduit support channels shall be 14-gauge galvanized (or equivalent treatment) channel sized for conduit to be supported. Channel suspension shall be 3/8" threaded steel rods. Conduit straps shall be spring steel type compatible with channel.

C. Conduit straps shall be single-hole cast metal type or two-hole galvanized metal type. Conduit clamps shall be spring steel type for use with exposed structural steel.

D. Conduit run on roof shall be supported at intervals not exceeding 10 feet using supports by Dura-blok db10, or equal.

2.5 RIGID METALLIC CONDUIT, INTERMEDIATE METALLIC CONDUIT, AND ELECTRICAL METALLIC TUBING

A. Rigid metallic conduit and intermediate metallic conduit shall be steel and standard thread.

B. Electrical metallic tubing (EMT) shall be steel.

2.6 RIGID METALLIC, INTERMEDIATE METALLIC, AND FLEXIBLE CONDUIT AND FITTINGS

A. Rigid metallic conduit and intermediate metallic conduit shall be steel and standard thread.

B. Flexible conduit shall be steel, or aluminum type classified for system grounding.

C. Connectors for flexible conduit shall be insulated throat type rated as suitable for system ground continuity.

D. Flexible conduit used for other than connections to lighting fixtures shall not be less than 1/2" trade size. 3/8" flexible conduit may be used for connection to light fixtures when sized according to the National Electrical Code.

E. Flexible conduit used in damp or wet locations shall be liquid tight.

2.7 PULL BOXES

A. Pull boxes shall be constructed of galvanized steel with flat, removable covers fastened with plated steel screws.

B. Pull boxes shall be equipped with keyhole screw slots in the cover to permit removal of the cover without extracting the screws.

C. Pull boxes shall have provisions for grounding.

2.8 MAINTENANCE HOLES/HANDHOLES

A. Maintenance Holes
1. Maintenance holes shall be pre-cast or cast in place concrete with a strength of 3,500 psi at 28 days, and steel reinforced.
2. Maintenance holes shall include a cast iron frame with cover, a hot dipped galvanized steel ladder, and hot dipped galvanized pulling eyes embedded in the concrete opposite each duct entrance and in the floor beneath the cover.
3. Maintenance holes shall be equipped with grounding busbar.
4. Maintenance holes shall be equipped with racking for cable storage.
5. Ground splices and connections at maintenance holes shall be exothermic welds, copper or bronze compression ground fittings, or bolted compression ring lugs.
6. The cover for electrical maintenance holes shall have the lettering, “POWER” or “ELECTRIC.”
7. The cover for low voltage maintenance holes shall have the lettering, “COMMUNICATIONS.”

B. Handholes
1. Handholes shall be non-conductive and shall not require grounding for safety. Handholes shall be unaffected by freeze/thaw and resistant to sunlight and chemicals. Handholes shall be pre-cast polymer concrete, heavy duty rated and bottomless.
2. Handholes shall be equipped with racking for cable storage.
3. Electrical handholes shall have the word “POWER” or “ELECTRIC” molded in the cover by the manufacturer. The cover shall be attached with penta-head stainless steel bolts.
4. Low voltage handholes shall have the word “COMMUNICATIONS” molded in the cover by the manufacturer. The cover shall be attached with penta-head stainless steel bolts.
5. Handholes shall be able to withstand 10,000 lbs. minimum.
6. See Drawings for handhole dimensions and locations.

2.9 CONDUIT PLUGS/CAPS

A. Conduit Plugs/Caps
1. Conduit plugs shall provide a watertight seal at expose ends of conduits.
2. Conduit plugs shall be conduit size specific.

PART 3 - EXECUTION

3.1 INSTALLATION

A. General
1. Minimum size for electrical conduits shall be 3/4" trade size.
2. Minimum size for low voltage conduits shall be 3/4" trade size.
3. Conceal all conduits, except in unfinished spaces such as equipment rooms or as indicated by symbol on the drawings.
4. Leave all empty conduits with a 200-pound test nylon cord pull line.
5. Flattened, dented, or deformed conduits are not permitted and shall be removed and replaced.
6. Fasten conduit support device to structure with wood screws on wood, toggle bolts on hollow masonry, anchors as specified on solid masonry or concrete, and machine bolts, clamps, or spring steel clips, on steel.
7. Protect conduits against dirt, plaster, and foreign debris with conduit caps or plugs, which shall remain in place until all masonry is complete. Protect conduit stub-ups during construction from damage, any damage conduits shall not be used and are to be replaced.
8. All feeder conduits shall be cleared of any dirt, foreign debris, etc.
9. Install conduit with wiring, including homeruns as indicated on the drawings. Any change resulting in a savings in labor or materials is to be made only in accordance with a Contract change. Deviations shall be made only where necessary to avoid interferences and when approved by Engineer by written authorization.
10. Conduits which penetrate roof membranes shall be installed in accordance with manufacturer’s recommendations and architectural specifications.
11. Seal all conduits entering building from below grade, all conduits entering refrigerated spaces i.e. freezers and coolers, and all conduits entering exterior mounted electrical equipment with insulating electrical putty to prevent entrance of moisture.
12. Separate raceway systems are to be installed for power systems and for control, signal and communications systems. Do not install control, signal or communications cables in the same raceways as branch circuit or feeders’ cables, unless indicated otherwise on the drawings.
13. Conduit fittings shall be set screw type for dry, indoor environments. Conduit fittings shall be gland and ring compression type for all conduit exposed to outdoor environments or wet locations.
14. Conduit shall be run parallel or at right angles to walls, ceilings, and structural members.
15. Support conduits at intervals not exceeding ten feet and within three feet of each outlet, junction box, fitting, panelboard, enclosure or cabinet. Support conduits from structural steel members with spring steel type or beam conduit clamps and to non-metallic

structural members with one-hole conduit straps. For exposed conduits and where conduits must be suspended below structure, single conduit runs shall be supported from structure by hanger rod and conduit clamp assembly, and multiple conduits shall be supported by trapeze type support suspended from structure. Do not attach conduits to ceiling suspension system channels or suspension wires.

16. Attach feeder conduits larger than one-inch trade diameter to or from structure on intervals not exceeding twelve feet with conduit beam clamps, one-hole conduit straps or trapeze type support.
17. Where conduits must pass through structural members obtain approval of Architect.
18. Install all conduits or sleeves penetrating or routed within rated fire walls or fire floors to maintain fire rating of wall or floor. Conduit shall not be installed in rated floors or walls if it compromises or violates the fire rating of floor or wall. Refer to architectural documents.
19. Provide expansion and deflection coupling where conduit passes over a building expansion joint.
20. Keep raceways at least 6 inches away from parallel runs of flues and steam or hot-water pipes. Install horizontal raceway runs above water and steam piping.
21. Telephone and signal system raceways: 2" trade size and smaller: In addition to above requirements, install raceways in maximum lengths of 150 feet and with a maximum of two 90-degree bends or equivalent. Separate lengths with pull or junction boxes where necessary to comply with these requirements.

B. Uses Permitted

1. Conduits installed within concrete floor slabs shall be galvanized rigid steel (GRS), Schedule 40, heavy wall PVC, or electrical non-metallic tubing (ENT).
2. Conduit run exterior exposed: Galvanized rigid steel (GRS) or intermediate metal conduit (IMC).
3. Conduits in direct contact with earth shall be Schedule 40, heavy wall PVC. Elbows for underground conduits greater than 200' in length shall be galvanized rigid steel (GRS), if elbows are concrete encased. Service entrance conduits installed exposed, or concealed in walls or above ceilings, shall be galvanized rigid steel (GRS) or intermediate metal conduit (IMC). Unless indicated otherwise, service entrance conduits shall be installed “outside” of the building as defined by the NEC. Provide concrete encasement where required or as indicated on drawings.
4. All other conduit, unless specified herein, not permitted in accordance with the NEC, or otherwise indicated on the drawings, shall be electrical metallic tubing (EMT). PVC conduit is not allowed in exposed or concealed areas, but only within concrete or below grade. Feeder or branch circuit conduits that emerge from a floor slab in an exposed location shall be galvanized rigid steel (GRS).
5. Use flexible conduit for connections to motors, dry type transformers, electrical duct heaters, unit heaters, bus duct tap devices, flush mounted lighting fixtures, and any vibrating equipment.
    a. Flexible conduit used for connection of motors, dry type transformers, electric duct heaters, unit heaters, and bus duct tap devices shall not exceed 36 inches in length.
    b. Flexible conduit from outlet box to flush mounted lighting fixture shall not exceed 6 feet in length.
    c. Maintain ground continuity through flexible conduit with green equipment grounding conductor; do not use flexible conduit for ground continuity.
    d. Flexible conduit installed within plenum spaces shall be limited to lengths not exceeding 4 feet.
    e. Liquid tight flexible conduit shall be used to connect equipment in exterior, damp or wet locations.
6. All conduit from the fire pump controller to the fire pump shall be either galvanized rigid steel (GRS) or liquid tight flexible conduit.

C. Below Grade Raceway Installations

1. Install top of conduits 2 inches minimum below bottom of building slabs.

D. Raceway Installations within Concrete
1. Conduit shall be run following the most direct route between points.
2. Conduit shall not be installed in concrete where the outside diameter is larger than 1/3 of the slab thickness.
3. Conduits shall not be installed within shear walls unless specifically indicated on the drawings. Conduit shall not be run directly below and parallel with load bearing walls.
4. Protect all conduits entering and leaving concrete floor slabs from physical damage during construction.
5. Provide expansion fittings in all conduits that pass-through building expansion joints.

3.2 PULL BOXES

A. Pull boxes shall be secured, independent of the conduit entries into the box. Pull boxes shall be secured to the building structure. In ceiling applications, pull boxes shall not be supported with ceiling wires.

B. Conduits entering pull boxes shall connect to pull boxes using die-cast zinc connectors.

C. Pull boxes shall be free from burrs, dirt and debris.

3.3 MAINTENANCE HOLES/HANDHOLES

A. Maintenance holes/handholes shall be installed on a base of pea gravel at least 12 inches deep.

B. Tops of maintenance holes/handholes shall be level with the existing grade.

C. Ducts should enter as perpendicular to the wall surface as possible.

D. Maintenance holes shall be grounded with four 3/4-inch diameter by 8-foot-long ground rods, one driven inside of the maintenance hole at each corner. Connect the ground rods and any duct bank ground conductors together with a No. 4/0 AWG bare, stranded copper ground wire loop. A No. 2 AWG bare stranded copper pigtail from the ground wire loop shall be used to ground the maintenance hole cover frame, ladder support bracket, any metallic concrete inserts and metallic cable racks, and the shields of any cables that are spliced in the maintenance hole.

3.4 CONDUIT PLUGS/CAPS

A. Protect conduits against dirt, plaster, and foreign debris with conduit plugs. Plugs shall remain in place until ready for use.

B. Simplex, triplex or quadplex duct plugs shall be installed in conduits to house and seal cables.

3.5 ADDITIONAL REQUIREMENTS FOR INTERIOR LOW VOLTAGE CONDUITS

A. Conduit runs shall not have more than two (2) 90-degree bends between pull points.

B. Communications conduit system shall contain no condulets (also known as an LB).

C. Horizontal Conduits
1. Support horizontal conduits at intervals not exceeding ten feet and within three feet of each outlet, junction box, backboard, enclosure or cabinet. Support conduits from structural steel members with spring steel type or beam conduit clamps and to non-metallic structural members with one-hole conduit straps. For exposed conduits and where conduits must be suspended below structure, single conduit runs shall be supported from structure by hanger rod and conduit clamp assembly, and multiple conduits shall be supported by trapeze type support suspended from structure. Do not attach conduits to ceiling suspension system channels or suspension wires.
2. For runs that total more than 100 feet in length, insert pull boxes so that no segment between boxes exceeds the 100 feet limit.

3. Each horizontal home-run conduit can serve from one (1) to three (3) outlet boxes. For one (1) outlet box, a 3/4" conduit shall be used, minimum. For two (2) outlet boxes, a 1" conduit shall be used, minimum. For three (3) outlet boxes, a 1-1/4" conduit shall be used, minimum.

3.6 REQUIREMENTS FOR OUTSIDE PLANT LOW VOLTAGE CONDUITS

A. Duct Banks
1. Duct banks shall be sloped downward toward maintenance holes/handholes and away from buildings a minimum of 6 inches per 100 feet. Duct banks shall not route water from maintenance holes/handholes into buildings. Duct banks shall not contain traps between maintenance holes/handholes where water may accumulate.
2. Where power and communications duct banks run in parallel, they shall be separated by a minimum of 12 inches.
3. Where duct banks enter maintenance holes or buildings, they shall be constructed as integral to the wall.
4. Duct bank shall extend to the inside surfaces of the walls, and the duct bank reinforcing shall be integrated with the wall reinforcing.
5. Bell ends shall be provided on ducts where the ducts enter maintenance holes or buildings.
6. Direct buried ducts and fittings shall have bend radii greater than the minimum bend radii of the cables enclosed and shall not be smaller than the radii of standard manufactured elbows.
7. Direct buried ducts shall be installed parallel to or at right angles to building lines and site features, and as close to curbs and sidewalks as possible to avoid interferences with future landscaping.
8. Where direct buried PVC ducts cannot be buried deep enough to meet the NEC minimum cover requirements, rigid steel conduits shall be installed instead, or a concrete cover shall be poured over the ducts.
9. An orange detectable marker tape (for communications) shall be buried in the backfill approximately 12 inches above duct banks or direct buried cables for the entire length of the duct run.
10. A flexible mandrel and a stiff bristled brush shall be pulled through the ducts to clean them prior to cable pulling.
11. Ducts shall be identified in the maintenance holes and at both ends.

B. Additional OSP Conduit Requirements
1. Install a #14 AWG tracer wire in one conduit for the entire length of each duct run.
2. Below Grade Conduit Installations
   a. Install top of conduits 24 inches minimum below finished grade.
   b. Install top of conduits 6 inches minimum below bottom of building slabs.
3. For runs that total more than 400 feet in length, insert handholes/maintenance holes so that no segment exceeds the 400 feet limit.

END OF SECTION 26 05 33

SECTION 26 05 34 - OUTLET BOXES AND JUNCTION BOXES

PART 1 - GENERAL

1.1 GENERAL REQUIREMENTS

A. All work specified herein shall be accomplished in accordance with the applicable requirements of Section 26 0000 - Electrical General.

1.2 WORK INCLUDED

A. The work under this section shall include all labor, materials, accessories, services and equipment necessary to furnish and install outlet and junction boxes, complete, as indicated on the Drawings and as specified herein.

B. Equipment schedules and specifications are based on the one manufacturer listed in the schedule. Other manufacturers of equal quality and performance may be submitted to the Engineer for review. When substitution of equipment is made the Contractor shall be responsible for the costs of any item and engineered and construction revisions necessary in his or any other contract or trade that may be required to satisfy plans and specifications.

1.3 QUALITY ASSURANCE

A. Sheet Metal Outlet and Device Boxes: NEMA OS 1.

B. Cast-Metal Outlet and Device Boxes: NEMA FB 1, Type FD, with gasketed cover.

C. Nonmetallic Outlet and Device Boxes: NEMA OS 2.

D. Small Sheet Metal Pull and Junction Boxes: NEMA OS 1.

E. Cast-Metal Pull and Junction Boxes: NEMA FB 1, cast aluminum with gasketed cover.

F. Hinged-Cover Enclosures: NEMA 250, Type 1, with continuous hinge cover and flush latch.
   1. Metal Enclosures: Steel, finished inside and out with manufacturer's standard enamel.
   2. Nonmetallic Enclosures: Plastic, finished inside with radio-frequency-resistant paint.

G. Cabinets: NEMA 250, Type 1, galvanized steel box with removable interior panel and removable front, finished inside and out with manufacturer's standard enamel. Hinged door in front cover with flush latch and concealed hinge. Key latch to match panelboards. Include metal barriers to separate wiring of different systems and voltage and include accessory feet where required for freestanding equipment.

1.4 JOB CONDITIONS

A. Protection: Anchor boxes securely to formwork. Provide necessary protection to prevent entry of concrete.

B. Sequencing, Scheduling: Locations of outlets shown on the Drawings are relative and approximate. Exact locations shall be determined on the job and the outlets accurately set according to the architectural drawings, dimensions, casework knee space, building conditions, furniture positions and Architect's direction. The right is reserved to change the exact location (10'-0" or less) of any switch, ceiling outlet or other outlet in any room before it is permanently installed without increase in Contract cost.

C. All outlet boxes and junction boxes shall be accessible. Any boxes in non-accessible areas (furred ceilings) shall be set flush with barrier surface at a location approved by the Architect.

PART 2 - PRODUCTS

2.1 MANUFACTURERS

A. Acceptable Manufacturers: National Electric Products Company, Thomas & Betts/Steel City, Appleton or Raco.

2.2 OUTLET BOXES

A. Standard Outlet Boxes: Boxes and covers shall be galvanized steel not less than 1/16" thick and in every instance, of such form and dimensions as to be adapted to its specific use and location, kind of fixtures to be used and number, size and arrangement of conduits connecting thereto and particularly sized to accommodate the number and size of wires to be contained therein.

B. Ceiling outlet boxes shall be 1-1/2" or 3-3/8" deep, 4" octagonal (or 4" square when required due to number of wires). Plaster rings or device covers need not be provided on ceiling boxes. Provide extension rings on ceiling boxes to accommodate number of conductors in box.

C. Wall outlet boxes for toggle switches and convenience outlets shall be 1-1/2" or 2-1/8" deep, 4" or 4-11/16" square. Provide with single-device covers (or two-device covers where needed). Covers shall be raised type to compensate for thickness of plaster or gypsum board wall finish.

D. Outlet boxes for telecommunication purposes (telephone, data, etc.) shall be 4" x 4" square, 2- 1/8" deep. Provide with single device covers (or two-device covers where needed). Covers shall be raised type to compensate for thickness of plaster or gypsum board wall finish.

E. Junction boxes shall be as specified for ceiling and wall outlet boxes. Provide flat covers on ceiling outlets to match ceiling finish. Provide blank device type cover plates on wall outlets, of same materials as specified for device cover plates in same room or area.

F. Outlet boxes where exposed rigid conduit is used shall be cast ferrous alloy, galvanized or cast aluminum.

G. Covers: Where outlet boxes are to be capped, blank cover plates shall be used.

H. Barriers: Provide barriers between devices operating at different voltages or on separate systems such as normal, critical, or life safety.

2.3 FLOOR BOXES

A. Product Description
   1. Floor boxes for receptacles and telephone/data outlets shall be rectangular, cast iron. Boxes shall be suitable for use in slab-on-grade or above grade. Boxes shall include a non-metallic concrete cover to prohibit concrete or debris from entering the box during installation.
   2. Provide number of compartments as indicated on drawings.
   3. Cover plates and flanges shall be brass.
   4. Floor box device covers shall meet UL 514C requirements for scrub water test standards.

B. Manufacturer
   1. Hubbell — B24 Series
   2. Legrand/Wiremold — OmniBox Cast Iron 880CS Series
   3. Thomas & Betts — 640 Series

C. For poke-thru devices, refer to 2.4 D of Section 26 2726 - Wiring Devices.

2.4 PULL AND JUNCTION BOXES

A. Pull and Junction boxes are not completely indicated. They shall be sized and installed where required in accordance with the NEC.

B. Pull and Junction boxes shall be the suitable NEMA type number to match the environmental

conditions.

C. Locations of concealed pull and junction boxes shall be indicated on the record as built drawings for Owner's record.

2.5 CABINETS, FITTINGS, BOXES: GENERAL

A. Cabinets shall be in accordance with UL 50, "Electrical Cabinets and Boxes" and NEMA 250, Type 1. Electrical cabinets, boxes and fittings shall be as required for types, sizes, and NEMA enclosure classes. Where not indicated, provide units of types, sizes, and classes appropriate for the use and location. Provide all items complete with covers and accessories required for the intended use. Provide gaskets for units in damp or wet locations.

B. Construction shall be sheet steel, NEMA 1 class except as otherwise indicated. Cabinets shall consist of a box and a front consisting of a 1-piece frame and a hinged door. Arrange door to close against a rabbet placed all around the inside edge of the frame, with a uniformly close fit between door and frame. Provide concealed fasteners, not over 24" apart, to hold fronts to cabinet boxes and provide for adjustment. Provide flush or concealed door hinges not over 24" apart and not over 6" from top and bottom of door. For flush cabinets, make the front approximately 3/4" larger than the box all around. For surface mounted cabinets make from same height and width as box. Furnish metal barriers to separate wiring of different systems and voltage and furnish accessory feet where required for freestanding equipment.

C. Fasteners for general use shall be corrosion resistant screws and hardware including cadmium and zinc plated items.

D. Fasteners for damp and wet locations shall be stainless steel screws and hardware.

E. Exterior finish shall be gray baked enamel for items exposed in finished locations except as otherwise indicated.

F. Painted interior finish, where indicated, shall be white baked enamel.

G. Fittings for boxes, cabinets, and enclosures shall be in accordance with UL 5148 and shall be zinc plated steel for conduit hubs, bushings and box connectors.

2.6 UNDERGROUND PULL/JUNCTION BOXES

A. Unless noted otherwise, underground enclosures shall be fiberglass, open-bottom and sloped-wall. Covers shall be polymer concrete. Boxes shall be installed in areas expected to experience only light incidental, non-deliberate vehicular traffic (including that from mowers).

B. Enclosures shall meet the load requirements and three-point test procedures specified in the industry standard ANSI SCTE 77 2007. Enclosures shall meet the Tier 8 cover load test (for light traffic) of 12,000 lbs. over a 10" x 10" plate.

C. Manufacturer's guidelines shall be followed for installation, including 6" gravel bed beneath box for stability and drainage. Concrete collar shall be poured around enclosure to protect the ring and top from impact due to soil erosion.

D. Manufacturer
   1. Highline Products
   2. OZ-Gedney

PART 3 - EXECUTION

3.1 INSPECTION

A. The location of all wall outlets, including light fixtures, receptacles, switches, etc., shall be checked to see that the outlet will clear any wall fixture, shelving, work tables, sinks, baseboard and fin type convectors, bulletin boards, etc., that will be installed.

B. Exact locations of outlet boxes shall be coordinated with other trades so that outlet will not be covered by ductwork, piping, etc.

C. The approximate locations of outlets are indicated on the Drawings. The exact locations shall be determined at the building. The right is reserved to change, without additional cost, the exact location of any outlet, a maximum of 10' before it is permanently installed.

3.2 PREPARATION

A. Architectural Placement: Outlets occurring in architectural features shall be accurately centered in same. Space wall switch outlets equidistant from door trims on the strike side of doors as installed so that cover plate clears trim. Orientation of outlet boxes (horizontal or vertical) shall be as indicated on architectural elevations.

B. Install all outlet boxes in finished areas flush with wall or ceiling finish. Maintain 1/4" or less space between outlet box front and finish wall surface.

C. All switches at same level shall be installed on one horizontal line as shown on the Drawings.

D. Wall mounted controls, including temperature controls, in a room shall be grouped at the same location and at same mounting heights.

3.3 INSTALLATION

A. At all concealed outlets for electric lights, switches, wall receptacles, etc., standard outlet boxes and plaster rings shall be provided.

B. Outlet boxes shall be firmly anchored in place and shall be provided with approved fixture studs where required. Outlet boxes shall not depend on the cover plate to hold it secure to the wall.

C. Boxes on opposite sides of walls or partitions: Where drawings show back-to-back wiring devices, the devices on opposite sides of the wall shall be offset a minimum of 6". Through-the- wall type boxes shall not be used. Where boxes will be located on opposite sides of walls or partitions located 24" or closer to each other, moldable putty pads shall be installed to completely cover the exterior surfaces of the box within the stud cavity with a ball of putty material used to plug the end of each conduit at its connection to the box.

D. All holes cut through new or existing smoke or fire partitions shall be sealed. Sealant shall be 3M Brand Fire Barrier System or approved equal. Seals shall be installed in accordance with manufacturer's recommendations.

E. All flush boxes in rated walls that are larger than 16 square inches in area shall be backed as follows: 1-hour wall - 1 layer of 5/8" gypsum board; 2-hour rated wall - 2 layers of 5/8" gypsum board. Gypsum shall be fire code and attached to outside surfaces of box(es).

F. Cast aluminum, threaded hub type boxes with gasketed weatherproof covers shall be used for wet locations where box is surface mounted.

G. Location of floor boxes indicated is approximate. The Contractor shall refer to the final furniture layout or request field instructions for the exact location. Consult the Architect prior to installation.

END OF SECTION 26 05 34

SECTION 26 05 35 - LOW VOLTAGE BACKBOARDS & ENCLOSURES

PART 1 - GENERAL

1.1 GENERAL REQUIREMENTS

A. Applicable requirements of Section 26 0000 - Electrical General shall be considered a part of this section and shall have the same force as if printed herein full.

B. This document describes the products and execution requirements relating to backboards.

C. Product specifications, general design considerations, and installation guidelines are provided in this document. The successful vendor shall meet or exceed all requirements described in this document and/or on the Drawings.

1.2 WORK INCLUDED

A. The work included under this specification consists of furnishing all labor, equipment, materials, supplies and performing all operations necessary to complete the installation. The Contractor will provide and install all the required material whether specifically addressed in the Specification or not.

B. The work shall include, but not be limited to the following:

1. Furnish and install all backboards.

PART 2 - PRODUCTS

2.1 APPROVED PRODUCTS

A. Approved Equipment Backboard Manufacturer(s)

1. Hoover – ¾" Pyro-Guard
2. Standard ¾" Plywood (treated with fire-retardant paint)

PART 3 - EXECUTION

3.1 BACKBOARDS

A. Backboards shall be 3/4" void free plywood. Size of backboard shall be 4' x 8' unless noted differently on Drawings. Backboards shall be painted with two (2) coats of gray fire-retardant paint.

END OF SECTION 26 05 35

SECTION 26 05 43 - UNDERGROUND DUCTS AND RACEWAYS FOR ELECTRICAL SYSTEMS

PART 1 - GENERAL

1.1 RELATED DOCUMENTS

A. Drawings and general provisions of the Contract, including General and Supplementary Conditions and Division 01 Specification Sections, apply to this Section.

1.2 SUMMARY

A. Section Includes:

1. Metal conduits and fittings, including GRC.
2. Rigid nonmetallic duct.
3. Duct accessories.
4. Precast concrete handholes.
5. Polymer concrete handholes and boxes with polymer concrete cover.
6. Utility structure accessories.

1.3 DEFINITIONS

A. Direct Buried: Duct or a duct bank that is buried in the ground, without any additional casing materials such as concrete.

B. Duct: A single duct or multiple ducts. Duct may be either installed singly or as component of a duct bank.

C. Duct Bank:

1. Two or more ducts installed in parallel, with or without additional casing materials.
2. Multiple duct banks.

D. GRC: Galvanized rigid (steel) conduit.

E. Traffic ways: Locations where vehicular or pedestrian traffic is a normal course of events.

1.4 ACTION SUBMITTALS

A. Product Data: For each type of product.

1. Include duct-bank materials, including spacers and miscellaneous components.
2. Include duct, conduits, and their accessories, including elbows, end bells, bends, fittings, and solvent cement.
3. Include accessories for manholes, handholes, boxes, and other utility structures.
4. Include underground-line warning tape.

B. Shop Drawings:

1. Precast or Factory-Fabricated Underground Utility Structures:

a. Include plans, elevations, sections, details, attachments to other work, and accessories.
b. Include duct entry provisions, including locations and duct sizes.
c. Include reinforcement details.
d. Include frame and cover design and manhole chimneys.
e. Include grounding details.
f. Include dimensioned locations of cable rack inserts, pulling-in and lifting irons, and sumps.
g. Include joint details.

2. Factory-Fabricated Handholes and Boxes Other Than Precast Concrete:

a. Include dimensioned plans, sections, and elevations, and fabrication and installation details.
b. Include duct entry provisions, including locations and duct sizes.
c. Include cover design.
d. Include grounding details.
e. Include dimensioned locations of cable rack inserts, and pulling-in and lifting irons.

1.5 INFORMATIONAL SUBMITTALS

A. Duct and Duct-Bank Coordination Drawings: Show duct profiles and coordination with other utilities and underground structures.

1. Include plans and sections, drawn to scale, and show bends and locations of expansion fittings.
2. Drawings shall be signed and sealed by a qualified professional engineer.

B. Qualification Data: For professional engineer and testing agency responsible for testing nonconcrete handholes and boxes.

C. Product Certificates: For concrete and steel used in precast concrete handholes, as required by ASTM C 858.

D. Source quality-control reports.

E. Field quality-control reports.

1.6 MAINTENANCE MATERIALS SUBMITTALS

A. Furnish extra materials that match products installed and that are packaged with protective covering for storage and identified with labels describing contents.

B. Furnish cable-support stanchions, arms, insulators, and associated fasteners in quantities equal to 5 percent of quantity of each item installed.

1.7 QUALITY ASSURANCE

A. Testing Agency Qualifications: Qualified according to ASTM E 329 for testing indicated.

1.8 FIELD CONDITIONS

A. Interruption of Existing Electrical Service: Do not interrupt electrical service to facilities occupied by Owner or others unless permitted under the following conditions, and then only after arranging to provide temporary electrical service according to requirements indicated:

1. Notify Construction Manager no fewer than two days in advance of proposed interruption of electrical service.
2. Do not proceed with interruption of electrical service without Construction Manager's written permission.

B. Ground Water: Assume ground-water level is at grade level unless a lower water table is noted on Drawings.

PART 2 - PRODUCTS

2.1 METAL CONDUIT AND FITTINGS

A. GRC: Comply with ANSI C80.1 and UL 6.

B. Listed and labeled as defined in NFPA 70, by a nationally recognized testing laboratory, and marked for intended location and application.

2.2 RIGID NONMETALLIC DUCT

A. Underground Plastic Utilities Duct: Type EPC-80-PVC and Type EPC-40-PVC RNC, complying with NEMA TC 2 and UL 651, with matching fittings complying with NEMA TC 3 by same manufacturer as duct.

B. Listed and labeled as defined in NFPA 70, by a nationally recognized testing laboratory, and marked for intended location and application.

C. Solvents and Adhesives: As recommended by conduit manufacturer.

2.3 DUCT ACCESSORIES

A. Duct Spacers: Factory-fabricated, rigid, PVC interlocking spacers; sized for type and size of duct with which used, and selected to provide minimum duct spacing indicated while supporting duct during concreting or backfilling.

B. Underground-Line Warning Tape: Comply with requirements for underground-line warning tape specified in Section 260553 "Identification for Electrical Systems."

2.4 PRECAST CONCRETE HANDHOLES AND BOXES

A. Description: Factory-fabricated, reinforced-concrete, monolithically poured walls and bottom unless open-bottom enclosures are indicated. Frame and cover shall form top of enclosure and shall have load rating consistent with that of handhole or box.

B. Comply with ASTM C 858 for design and manufacturing processes.

C. Frame and Cover: Weatherproof steel frame, with hinged steel access door assembly with tamper-resistant, captive, cover-securing bolts.

1. Cover Hinges: Concealed, with hold-open ratchet assembly.
2. Cover Handle: Recessed.

D. Frame and Cover: Weatherproof aluminum frame with hinged aluminum access door assembly with tamper-resistant, captive, cover-securing bolts.

1. Cover Hinges: Concealed, with hold-open ratchet assembly.
2. Cover Handle: Recessed.

E. Cover Finish: Nonskid finish shall have a minimum coefficient of friction of 0.50.

F. Cover Legend: Molded lettering, "ELECTRIC."

G. Configuration: Units shall be designed for flush burial and have open bottom unless otherwise indicated.

H. Extensions and Slabs: Designed to mate with bottom of enclosure. Same material as enclosure.

1. Extension shall provide increased depth of 12 inches (300 mm).
2. Slab: Same dimensions as bottom of enclosure, and arranged to provide closure.

I. Joint Sealant: Asphaltic-butyl material with adhesion, cohesion, flexibility, and durability properties necessary to withstand maximum hydrostatic pressures at the installation location with the ground-water level at grade.

J. Knockout Panels: Precast openings in walls, arranged to match dimensions and elevations of approaching duct, plus an additional 12 inches (300 mm) vertically and horizontally to accommodate alignment variations.

1. Splayed location.
2. Knockout panels shall be located no less than 6 inches (150 mm) from interior surfaces of walls, floors, or frames and covers of handholes, but close enough to corners to facilitate racking of cables on walls.
3. Knockout panel opening shall have cast-in-place, welded-wire fabric reinforcement for field cutting and bending to tie in to concrete envelopes of duct.
4. Knockout panels shall be framed with at least two additional No. 3 steel reinforcing bars in concrete around each opening.
5. Knockout panels shall be 1-1/2 to 2 inches (38 to 50 mm) thick.

K. Duct Entrances in Handhole Walls: Cast end-bell or duct-terminating fitting in wall for each entering duct.

1. Type and size shall match fittings to duct to be terminated.
2. Fittings shall align with elevations of approaching duct and be located near interior corners of handholes to facilitate racking of cable.

L. Handholes 20 inches wide by 24 inches long and larger shall have inserts for cable racks and pulling-in irons installed before concrete is poured.

2.5 POLYMER CONCRETE HANDHOLES AND BOXES WITH POLYMER CONCRETE COVER

A. Description: Molded of sand and aggregate, bound together with a polymer resin, and reinforced with steel or fiberglass or a combination of the two.

B. Standard: Comply with SCTE 77. Comply with tier requirements in "Underground Enclosure Application" Article.

C. Color: Gray.

D. Configuration: Units shall be designed for flush burial and have open bottom unless otherwise indicated.

E. Cover: Weatherproof, secured by tamper-resistant locking devices and having structural load rating consistent with enclosure.

F. Cover Finish: Nonskid finish shall have a minimum coefficient of friction of 0.50.

G. Cover Legend: Molded lettering, "ELECTRIC."

H. Direct-Buried Wiring Entrance Provisions: Knockouts equipped with insulated bushings or end-bell fittings, selected to suit box material, sized for wiring indicated, and arranged for secure, fixed installation in enclosure wall.

I. Duct Entrance Provisions: Duct-terminating fittings shall mate with entering duct for secure, fixed installation in enclosure wall.

2.6 UTILITY STRUCTURE ACCESSORIES

A. Accessories for Utility Structures: Utility equipment and accessory items used for utility structure access and utility support, listed and labeled for intended use and application.

B. Pulling Eyes in Concrete Walls: Eyebolt with reinforcing-bar fastening insert, 2-inch- (50-mm-) diameter eye, and 1-by-4-inch (25-by-100-mm) bolt.

1. Working Load Embedded in 6-Inch (150-mm), 4000-psi (27.6-MPa) Concrete: 13,000-lbf (58-kN) minimum tension.

C. Pulling Eyes in Nonconcrete Walls: Eyebolt with reinforced fastening, 1-1/4-inch- (31-mm-) diameter eye, rated 2500-lbf (11-kN) minimum tension.

D. Pulling-in and Lifting Irons in Concrete Floors: 7/8-inch- (22-mm-) diameter, hot-dip galvanized, bent steel rod; stress relieved after forming; and fastened to reinforcing rod. Exposed triangular opening.

1. Ultimate Yield Strength: 40,000-lbf (180-kN) shear and 60,000-lbf (270-kN) tension.

E. Bolting Inserts for Concrete Utility Structure Cable Racks and Other Attachments: Flared, threaded inserts of noncorrosive, chemical-resistant, nonconductive thermoplastic material; 1/2-inch (13-mm) ID by 2-3/4 inches (69 mm) deep, flared to 1-1/4 inches (31 mm) minimum at base.

1. Tested Ultimate Pullout Strength: 12,000 lbf (53 kN) minimum.

F. Ground Rod Sleeve: 3-inch (75-mm) PVC sleeve in manhole floors 2 inches (50 mm) from the wall adjacent to, but not underneath, the ducts routed from the facility.

G. Expansion Anchors for Installation after Concrete Is Cast: Zinc-plated, carbon-steel-wedge type with stainless-steel expander clip with 1/2-inch (13-mm) bolt, 5300-lbf (24-kN) rated pullout strength, and minimum 6800-lbf (30-kN) rated shear strength.

H. Cable Rack Assembly: Steel, hot-dip galvanized, except insulators.

1. Stanchions: T-section or channel; 2-1/4-inch (56-mm) nominal size; punched with 14 holes on 1-1/2-inch (38-mm) centers for cable-arm attachment.
2. Arms: 1-1/2 inches (38 mm) wide, lengths ranging from 3 inches (75 mm) with 450-lb (204-kg) minimum capacity to 18 inches (450 mm) with 250-lb (114-kg) minimum capacity. Arms shall have slots along full length for cable ties and be arranged for secure mounting in horizontal position at any vertical location on stanchions.
3. Insulators: High-glaze, wet-process porcelain arranged for mounting on cable arms.

I. Duct-Sealing Compound: Nonhardening, safe for contact with human skin, not deleterious to cable insulation, and workable at temperatures as low as 35 deg F (2 deg C). Capable of withstanding temperature of 300 deg F (150 deg C) without slump and adhering to clean surfaces of plastic ducts, metallic conduit, conduit and duct coatings, concrete, masonry, lead, cable sheaths, cable jackets, insulation materials, and common metals.

J. Cover Hooks: Heavy duty, designed for lifts 60 lbf (270 N) and greater. Two required.

2.7 SOURCE QUALITY CONTROL

A. Test and inspect precast concrete utility structures according to ASTM C 1037.

B. Nonconcrete Handhole and Pull-Box Prototype Test: Test prototypes of manholes and boxes for compliance with SCTE 77. Strength tests shall be for specified tier ratings of products supplied.

1. Tests of materials shall be performed by an independent testing agency.
2. Strength tests of complete boxes and covers shall be by an independent testing agency or manufacturer. A qualified registered professional engineer shall certify tests by manufacturer.
3. Testing machine pressure gages shall have current calibration certification, complying with ISO 9000 and ISO 10012, and traceable to NIST standards.

PART 3 - EXECUTION

3.1 PREPARATION

A. Coordinate layout and installation of duct, duct bank, manholes, handholes, and boxes with final arrangement of other utilities, site grading, and surface features as determined in the field. Notify Architect if there is a conflict between areas of excavation and existing structures or archaeological sites to remain.

B. Coordinate elevations of duct and duct-bank entrances into manholes, handholes, and boxes with final locations and profiles of duct and duct banks, as determined by coordination with other utilities, underground obstructions, and surface features. Revise locations and elevations as

required to suit field conditions and to ensure that duct and duct bank will drain to manholes and handholes, and as approved by Architect.

C. Clear and grub vegetation to be removed, and protect vegetation to remain according to Section 311000 "Site Clearing." Remove and stockpile topsoil for reapplication according to Section 311000 "Site Clearing."

3.2 UNDERGROUND DUCT APPLICATION

A. Duct for Electrical Cables More Than 600 V: Type EPC-80-PVC RNC, direct-buried unless otherwise indicated.

B. Duct for Electrical Feeders 600 V and Less: Type EPC-40-PVC RNC, direct-buried unless otherwise indicated.

C. Duct for Electrical Branch Circuits Type EPC-40-PVC RNC, direct-buried unless otherwise indicated.

D. Stub-ups: Concrete-encased GRC.

3.3 UNDERGROUND ENCLOSURE APPLICATION

A. Handholes and Boxes for 600 V and Less:

1. Units in Roadways and Other Deliberate Traffic Paths: Precast concrete. AASHTO HB 17, H-20 structural load rating.
2. Units in Driveway, Parking Lot, and Off-Roadway Locations, Subject to Occasional, Nondeliberate Loading by Heavy Vehicles: Precast concrete, AASHTO HB 17, H-20 structural load rating.
3. Units in Sidewalk and Similar Applications with a Safety Factor for Nondeliberate Loading by Vehicles: Precast concrete, AASHTO HB 17, H-10 structural load rating.
4. Cover design load shall not exceed the design load of the handhole or box.

3.4 EARTHWORK

A. Excavation and Backfill: Comply with Section 312000 "Earth Moving," but do not use heavy-duty, hydraulic-operated, compaction equipment.

B. Restoration: Replace area immediately after backfilling is completed or after construction vehicle traffic in immediate area is complete.

C. Restore surface features at areas disturbed by excavation, and re-establish original grades unless otherwise indicated. Replace removed sod immediately after backfilling is completed.

D. Restore areas disturbed by trenching, storing of dirt, cable laying, and other work. Restore vegetation and include necessary top-soiling, fertilizing, liming, seeding, sodding, sprigging, and mulching. Comply with Section 329200 "Turf and Grasses" and Section 329300 "Plants."

E. Cut and patch existing pavement in the path of underground duct, duct bank, and underground structures according to "Cutting and Patching" Article in Section 017300 "Execution."

3.5 DUCT AND DUCT-BANK INSTALLATION

A. Where indicated on Drawings, install duct, spacers, and accessories into the duct-bank configuration shown. Duct installation requirements in this Section also apply to duct bank.

B. Install duct according to NEMA TCB 2.

C. Slope: Pitch duct a minimum slope of 1:300 down toward manholes and handholes and away from buildings and equipment. Slope duct from a high point between two manholes, to drain in both directions.

D. Curves and Bends: Use 5-degree angle couplings for small changes in direction. Use manufactured long sweep bends with a minimum radius of 48 inches (1200 mm), both horizontally and vertically, at other locations unless otherwise indicated.

1. Duct shall have maximum of two 90-degree bends or the total of all bends shall be no more 180 degrees between pull points.

E. Joints: Use solvent-cemented joints in duct and fittings and make watertight according to manufacturer's written instructions. Stagger couplings so those of adjacent duct do not lie in same plane.

F. Installation Adjacent to High-Temperature Steam Lines: Where duct is installed parallel to underground steam lines, perform calculations showing the duct will not be subject to environmental temperatures above 40 deg C. Where environmental temperatures are calculated to rise above 40 deg C, and anywhere the duct crosses above an underground steam line, install insulation blankets listed for direct burial to isolate the duct bank from the steam line.

G. End Bell Entrances to Manholes and Concrete and Polymer Concrete Handholes: Use end bells, spaced approximately 10 inches (250 mm) on center for 5-inch (125-mm) duct, and vary proportionately for other duct sizes.

1. Begin change from regular spacing to end-bell spacing 10 feet (3 m) from the end bell, without reducing duct slope and without forming a trap in the line.
2. Expansion and Deflection Fittings: Install an expansion and deflection fitting in each duct in the area of disturbed earth adjacent to manhole or handhole. Install an expansion fitting near the center of all straight line direct-buried duct with calculated expansion of more than 3/4 inch (19 mm).
3. Grout end bells into structure walls from both sides to provide watertight entrances.

H. Terminator Entrances to Manholes and Concrete and Polymer Concrete Handholes: Use manufactured, cast-in-place duct terminators, with entrances into structure spaced approximately 6 inches (150 mm) on center for 4-inch (100-mm) duct, and vary proportionately for other duct sizes.

1. Begin change from regular spacing to terminator spacing 10 feet (3 m) from the terminator, without reducing duct line slope and without forming a trap in the line.
2. Expansion and Deflection Fittings: Install an expansion and deflection fitting in each duct in the area of disturbed earth adjacent to manhole or handhole. Install an expansion fitting near the center of all straight-line duct with calculated expansion of more than 3/4 inch (19 mm).

I. Building Wall Penetrations: Make a transition from underground duct to GRC at least 10 feet (3 m) outside the building wall, without reducing duct line slope away from the building and without forming a trap in the line. Use fittings manufactured for RNC-to-GRC transition. Install GRC

penetrations of building walls as specified in Section 260544 "Sleeves and Sleeve Seals for Electrical Raceways and Cabling."

J. Sealing: Provide temporary closure at terminations of duct with pulled cables. Seal spare duct at terminations. Use sealing compound and plugs to withstand at least 15-psig (1.03-MPa) hydrostatic pressure.

K. Pulling Cord: Install 200-lbf- (1000-N-) test nylon cord in empty ducts.

L. Direct-Buried Duct and Duct Bank:

1. Excavate trench bottom to provide firm and uniform support for duct. Comply with requirements in Section 312000 "Earth Moving" for preparation of trench bottoms for pipes less than 6 inches (150 mm) in nominal diameter.
2. Width: Excavate trench 12 inches (300 mm) wider than duct on each side.
3. Width: Excavate trench 3 inches (75 mm) wider than duct on each side.
4. Depth: Install top of duct at least 36 inches (900 mm) below finished grade unless otherwise indicated.
5. Set elevation of bottom of duct bank below frost line.
6. Support ducts on duct spacers coordinated with duct size, duct spacing, and outdoor temperature.
7. Spacer Installation: Place spacers close enough to prevent sagging and deforming of duct, with not less than four spacers per 20 feet (6 m) of duct. Place spacers within 24 inches (600 mm) of duct ends. Stagger spacers approximately 6 inches (150 mm) between tiers. Secure spacers to earth and to ducts to prevent floating during concreting. Tie entire assembly together using fabric straps; do not use tie wires or reinforcing steel that may form conductive or magnetic loops around ducts or duct groups.
8. Install duct with a minimum of 3 inches (75 mm) between ducts for like services and 6 inches (150 mm) between power and communications duct.
9. Elbows: Install manufactured duct elbows for stub-ups, at building entrances, and at changes of direction in duct direction unless otherwise indicated. Encase elbows for stub-up ducts throughout length of elbow.
10. Install manufactured GRC elbows for stub-ups, at building entrances, and at changes of direction in duct.

    a. Couple RNC duct to GRC with adapters designed for this purpose, and encase coupling with 3 inches (75 mm) of concrete.
    b. Stub-ups to Outdoor Equipment: Extend concrete-encased GRC horizontally a minimum of 60 inches (1500 mm) from edge of base. Install insulated grounding bushings on terminations at equipment.

        1) Stub-ups shall be minimum 4 inches (100 mm) above finished floor and minimum 3 inches (75 mm) from conduit side to edge of slab.

    c. Stub-ups to Indoor Equipment: Extend concrete-encased GRC horizontally a minimum of 60 inches (1500 mm) from edge of wall. Install insulated grounding bushings on terminations at equipment.

        1) Stub-ups shall be minimum 4 inches (100 mm) above finished floor and no less than 3 inches (75 mm) from conduit side to edge of slab.

11. After installing first tier of duct, backfill and compact. Start at tie-in point and work toward end of duct run, leaving ducts at end of run free to move with expansion and contraction as temperature changes during this process. Repeat procedure after placing each tier. After placing last tier, hand place back fill to 4 inches (100 mm) over duct and hand tamp.

Firmly tamp backfill around ducts to provide maximum supporting strength. Use hand tamper only. After placing controlled backfill over final tier, make final duct connections at end of run and complete backfilling with normal compaction. Comply with requirements in Section 312000 "Earth Moving" for installation of backfill materials.

a. Place minimum 3 inches (75 mm) of sand as a bed for duct. Place sand to a minimum of 6 inches (150 mm) above top level of duct.
b. Place minimum 6 inches (150 mm) of engineered fill above concrete encasement of duct.

M. Underground-Line Warning Tape: Bury conducting underground line specified in Section 260553 "Identification for Electrical Systems" no less than 12 inches (300 mm) above all concrete-encased duct and duct banks and approximately 12 inches (300 mm) below grade. Align tape parallel to and within 3 inches (75 mm) of centerline of duct bank. Provide an additional warning tape for each 12-inch (300-mm) increment of duct-bank width over a nominal 18 inches (450 mm). Space additional tapes 12 inches (300 mm) apart, horizontally.

3.6 INSTALLATION OF CONCRETE MANHOLES, HANDHOLES, AND BOXES

A. Cast-in-Place Manhole Installation:

1. Finish interior surfaces with a smooth-troweled finish.
2. Knockouts for Future Duct Connections: Form and pour concrete knockout panels 1-1/2 to 2 inches (38 to 50 mm) thick, arranged as indicated.
3. Comply with requirements in Section 033000 "Cast-in-Place Concrete" for cast-in-place concrete, formwork, and reinforcement.

B. Precast Concrete Handhole and Manhole Installation:

1. Comply with ASTM C 891 unless otherwise indicated.
2. Install units level and plumb and with orientation and depth coordinated with connecting duct, to minimize bends and deflections required for proper entrances.
3. Unless otherwise indicated, support units on a level bed of crushed stone or gravel, graded from 1-inch (25-mm) sieve to No. 4 (4.75-mm) sieve and compacted to same density as adjacent undisturbed earth.

C. Elevations:

1. Manhole Roof: Install with rooftop at least 15 inches (375 mm) below finished grade.
2. Manhole Frame: In paved areas and traffic ways, set frames flush with finished grade. Set other manhole frames 1 inch (25 mm) above finished grade.
3. Install handholes with bottom below frost line.
4. Handhole Covers: In paved areas and traffic ways, set surface flush with finished grade. Set covers of other handholes 1 inch (25 mm) above finished grade.
5. Where indicated, cast handhole cover frame integrally with handhole structure.

D. Drainage: Install drains in bottom of manholes where indicated. Coordinate with drainage provisions indicated.

E. Waterproofing: Apply waterproofing to exterior surfaces of manholes and handholes after concrete has cured at least three days. Waterproofing materials and installation are specified in After duct has been connected and grouted, and before backfilling, waterproof joints and connections, and touch up abrasions and scars. Waterproof exterior of manhole chimneys after mortar has cured at least three days.

F. Damp-proofing: Apply damp-proofing to exterior surfaces of manholes and handholes after concrete has cured at least three days. Damp-proofing materials and installation are specified in Section 071113 "Bituminous Damp-proofing." After ducts are connected and grouted, and before backfilling, dampproof joints and connections, and touch up abrasions and scars. Dampproof exterior of manhole chimneys after mortar has cured at least three days.

G. Hardware: Install removable hardware, including pulling eyes, cable stanchions, and cable arms, and insulators, as required for installation and support of cables and conductors and as indicated.

H. Field-Installed Bolting Anchors in Manholes and Concrete Handholes: Do not drill deeper than 3-7/8 inches (97 mm) for manholes and 2 inches (50 mm) for handholes, for anchor bolts installed in the field. Use a minimum of two anchors for each cable stanchion.

3.7 INSTALLATION OF HANDHOLES AND BOXES OTHER THAN PRECAST CONCRETE

A. Install handholes and boxes level and plumb and with orientation and depth coordinated with connecting duct, to minimize bends and deflections required for proper entrances. Use box extension if required to match depths of duct, and seal joint between box and extension as recommended by manufacturer.

B. Unless otherwise indicated, support units on a level bed of crushed stone or gravel, graded from 1/2-inch (12.5-mm) sieve to No. 4 (4.75-mm) sieve and compacted to same density as adjacent undisturbed earth.

C. Elevation: In paved areas and trafficways, set cover flush with finished grade. Set covers of other handholes 1 inch (25 mm) above finished grade.

D. Install handholes and boxes with bottom below frost line.

E. Install removable hardware, including pulling eyes, cable stanchions, cable arms, and insulators, as required for installation and support of cables and conductors and as indicated. Select arm lengths to be long enough to provide spare space for future cables, but short enough to preserve adequate working clearances in enclosure.

F. Field cut openings for duct according to enclosure manufacturer's written instructions. Cut wall of enclosure with a tool designed for material to be cut. Size holes for terminating fittings to be used, and seal around penetrations after fittings are installed.

3.8 GROUNDING

A. Ground underground ducts and utility structures according to Section 260526 "Grounding and Bonding for Electrical Systems."

3.9 FIELD QUALITY CONTROL

A. Perform the following tests and inspections:

1. Demonstrate capability and compliance with requirements on completion of installation of underground duct, duct bank, and utility structures.
2. Pull solid aluminum or wood test mandrel through duct to prove joint integrity and adequate bend radii, and test for out-of-round duct. Provide a minimum 12-inch- (300-mm-) long

mandrel equal to duct size minus 1/4 inch (6 mm). If obstructions are indicated, remove obstructions and retest.

3. Test manhole and handhole grounding to ensure electrical continuity of grounding and bonding connections. Measure and report ground resistance as specified in Section 260526 "Grounding and Bonding for Electrical Systems."

B. Correct deficiencies and retest as specified above to demonstrate compliance.

C. Prepare test and inspection reports.

3.10 CLEANING

A. Pull leather-washer-type duct cleaner, with graduated washer sizes, through full length of duct until duct cleaner indicates that duct is clear of dirt and debris. Follow with rubber duct swab for final cleaning and to assist in spreading lubricant throughout ducts.

B. Clean internal surfaces of manholes, including sump.

1. Sweep floor, removing dirt and debris.
2. Remove foreign material.

END OF SECTION 26 05 43

SECTION 26 0553
IDENTIFICATION FOR ELECTRICAL SYSTEMS

PART 1 - GENERAL

1.1 SECTION INCLUDES

A. Electrical identification requirements.

1.2 RELATED REQUIREMENTS

A. Section 260519 Conductors: Color coding for power conductors and cables 600 V and less; vinyl color coding electrical tape.

1.3 REFERENCE STANDARDS

A. National Electrical Code (NEC); National Fire Protection Association; Most Recent Edition Adopted by Authority Having Jurisdiction, Including All Applicable Amendments and Supplements.

1.4 SUBMITTALS

A. Product Data: Provide catalog data for nameplates, labels, and markers.

PART 2 - PRODUCTS

2.1 IDENTIFICATION REQUIREMENTS

A. Identification for Conductors and Cables:
   1. Color Coding for Power Conductors 600 V and Less: Comply with Section 260519 - Conductors.

B. Buried Electrical Lines: Underground warning tapes.

C. Communication Cabinets: Nameplates.

D. Control Device Station: Labels.

E. Electrical Distribution and Control Equipment Enclosures: Nameplates.

2.2 IDENTIFICATION NAMEPLATES AND LABELS

A. Identification Labels:
   1. Materials: Use self-adhesive laminated plastic labels; UV, chemical, water, heat, and abrasion resistant.
   2. Text: Do not use handwritten text.

B. Manufacturers:
   1. Kolbi Pipe Marker Co.: www.kolbipipemarkers.com.
   2. Seton Identification Products: www.seton.com.
   3. Other approved equal.

C. Nameplates: Engraved three-layer laminated plastic, black letters on white background.

D. Letter Size:
   1. Use 1/8-inch letters for identifying individual equipment and loads.
   2. Use 1/4-inch letters for identifying grouped equipment and loads.

E. Labels: Embossed adhesive tape, with 3/16-inch white letters on black background. Use only for identification of individual wall switches and receptacles, control device stations, and where indicated on the drawings.

2.3 UNDERGROUND WARNING TAPE

A. Manufacturers:
   1. Brady Corporation: www.bradyid.com.
   2. Seton Identification Products: www.seton.com.
   3. HellermannTyton: www.hellermanntyton.com.
   4. Other approved equal.

B. Materials: Use non-detectable type polyethylene tape suitable for direct burial, unless otherwise indicated.

C. Non-detectable Type Tape: 6 inches wide, with minimum thickness of 4 mil.

D. Legend: Type of service, continuously repeated over full length of tape.

2.4 WARNING SIGNS AND LABELS

A. Warning Signs:
   1. Materials: Non-detectable type polyethylene tape suitable for direct burial, unless otherwise indicated
   2. Minimum Size: 7 by 10 inches unless otherwise indicated.

B. Warning Labels:
1. Materials: Use factory pre-printed or machine-printed self-adhesive polyester, or self-adhesive vinyl labels; UV, chemical, water, heat, and abrasion resistant; produced using materials recognized to UL 969.
2. Machine-Printed Labels: Use thermal transfer process printing machines and accessories recommended by label manufacturer.
3. Minimum Size: 2 by 4 inches unless otherwise indicated.

PART 3 - EXECUTION

3.1 PREPARATION

A. Clean surfaces to receive adhesive products according to manufacturer's instructions.

3.2 INSTALLATION

A. Install products in accordance with manufacturer's instructions.

B. Install identification products to be plainly visible for examination, adjustment, servicing, and maintenance. Unless otherwise indicated, locate products as follows:
   1. Surface-Mounted Equipment: Enclosure front.
   2. Flush-Mounted Equipment: Inside of equipment door.
   3. Elevated Equipment: Legible from the floor or working platform.
   4. Interior Components: Legible from the point of access.
   5. Conductors and Cables: Legible from the point of access.

C. Secure nameplates to exterior surfaces of enclosures using stainless steel screws and to interior surfaces using self-adhesive backing, or epoxy cement.

D. Install underground warning tape above buried lines with one tape per trench at 3 inches below finished grade.

E. Labels on panels / disconnects: Include source panel / circuit(s) and equipment ID served.

F. Labels on receptacles: Include source panel / circuit.

END OF SECTION

SECTION 26 05 73 - OVERCURRENT PROTECTIVE DEVICE COORDINATION STUDY

PART 1 - GENERAL

1.1 RELATED DOCUMENTS

A. Drawings and general provisions of the Contract, including General and Supplementary Conditions and Division 01 Specification Sections, apply to this Section.
B. See switchboards section 26 2413 for additional information.

1.2 SUMMARY

A. This Section includes computer-based, fault-current and overcurrent protective device coordination studies. Protective devices shall be set based on results of the protective device coordination study.
1. Coordination of series-rated devices is permitted where indicated on Drawings.

1.3 ACTION SUBMITTALS

A. Product Data: For computer software program to be used for studies.
B. Other Action Submittals: The following submittals shall be made after the approval process for system protective devices has been completed. Submittals shall be in digital form.
1. Coordination-study input data, including completed computer program input data sheets.
2. Study and Equipment Evaluation Reports.
3. Coordination-Study Report.

1.4 INFORMATIONAL SUBMITTALS

A. Qualification Data: For coordination-study specialist.
B. Product Certificates: For coordination-study and fault-current-study computer software programs, certifying compliance with IEEE 399.

1.5 QUALITY ASSURANCE

A. Studies shall use computer programs that are distributed nationally and are in wide use. Software algorithms shall comply with requirements of standards and guides specified in this Section. Manual calculations are not acceptable.
B. Coordination-Study Specialist Qualifications: An entity experienced in the application of computer software used for studies, having performed successful studies of similar magnitude on electrical distribution systems using similar devices.
1. Professional engineer, licensed in the state where Project is located, shall be responsible for the study. All elements of the study shall be performed under the direct supervision and control of engineer.
C. Comply with IEEE 242 for short-circuit currents and coordination time intervals.
D. Comply with IEEE 399 for general study procedures.

PART 2 - PRODUCTS

2.1 COMPUTER SOFTWARE DEVELOPERS

A. Computer Software Developers: Subject to compliance with requirements, provide products by one of the following:

1. CGI CYME.
2. EDSA Micro Corporation.
3. ESA Inc.
4. Operation Technology, Inc.
5. SKM Systems Analysis, Inc.

2.2 COMPUTER SOFTWARE PROGRAM REQUIREMENTS

A. Comply with IEEE 399.

B. Analytical features of fault-current-study computer software program shall include "mandatory," "very desirable," and "desirable" features as listed in IEEE 399.

C. Computer software program shall be capable of plotting and diagramming time-current-characteristic curves as part of its output. Computer software program shall report device settings and ratings of all overcurrent protective devices and shall demonstrate selective coordination by computer-generated, time-current coordination plots.

1. Optional Features:
   a. Arcing faults.
   b. Simultaneous faults.
   c. Explicit negative sequence.
   d. Mutual coupling in zero sequence.

PART 3 - EXECUTION

3.1 EXAMINATION

A. Examine Project overcurrent protective device submittals for compliance with electrical distribution system coordination requirements and other conditions affecting performance. Devices to be coordinated are indicated on Drawings.

1. Proceed with coordination study only after relevant equipment submittals have been assembled. Overcurrent protective devices that have not been submitted and approved prior to coordination study may not be used in study.

3.2 POWER SYSTEM DATA

A. Verify that power system data is indicated on Drawings, allowing Contractor to complete the data gathering specified in this Article. Drawing Coordination Checklist may be useful in verification.

1. Gather and tabulate the following input data to support coordination study:
2. Product Data for overcurrent protective devices specified in other electrical Sections and involved in overcurrent protective device coordination studies. Use equipment designation tags that are consistent with electrical distribution system diagrams, overcurrent protective device submittals, input and output data, and recommended device settings.
3. Impedance of utility service entrance.
4. Electrical Distribution System Diagram: In hard-copy and electronic-copy formats, showing the following:
   a. Circuit-breaker and fuse-current ratings and types.
   b. Relays and associated power and current transformer ratings and ratios.
   c. Transformer kilovolt amperes, primary and secondary voltages, connection type, impedance, and X/R ratios.
   d. Generator kilovolt amperes, size, voltage, and source impedance.
   e. Cables: Indicate conduit material, sizes of conductors, conductor material, insulation, and length.
   f. Busway ampacity and impedance.
   g. Motor horsepower and code letter designation according to NEMA MG 1.

2. Data sheets to supplement electrical distribution system diagram, cross-referenced with tag numbers on diagram, showing the following:
   a. Special load considerations, including starting inrush currents and frequent starting and stopping.
   b. Transformer characteristics, including primary protective device, magnetic inrush current, and overload capability.
   c. Motor full-load current, locked rotor current, service factor, starting time, type of start, and thermal-damage curve.
   d. Generator thermal-damage curve.
   e. Ratings, types, and settings of utility company's overcurrent protective devices.
   f. Special overcurrent protective device settings or types stipulated by utility company.
   g. Time-current-characteristic curves of devices indicated to be coordinated.

h. Manufacturer, frame size, interrupting rating in amperes rms symmetrical, ampere or current sensor rating, long-time adjustment range, short-time adjustment range, and instantaneous adjustment range for circuit breakers.
i. Manufacturer and type, ampere-tap adjustment range, time-delay adjustment range, instantaneous attachment adjustment range, and current transformer ratio for overcurrent relays.
j. Panelboards, switchboards, motor-control center ampacity, and interrupting rating in amperes rms symmetrical.

3.3 FAULT-CURRENT STUDY

A. Calculate the maximum available short-circuit current in amperes rms symmetrical at circuit-breaker positions of the electrical power distribution system. The calculation shall be for a current immediately after initiation and for a three-phase bolted short circuit at each of the following:
   1. Switchgear and switchboard bus.
   2. Medium-voltage controller.
   3. Motor-control center.
   4. Distribution panelboard.
   5. Branch circuit panelboard.
B. Study electrical distribution system from normal and alternate power sources throughout electrical distribution system for Project. Include studies of system-switching configurations and alternate operations that could result in maximum fault conditions.
C. Calculate momentary and interrupting duties based on maximum available fault current.
D. Calculations to verify interrupting ratings of overcurrent protective devices shall comply with IEEE 141 and IEEE 242.
   1. Transformers:
      a. ANSI C57.12.10.
      b. ANSI C57.12.22.
      c. ANSI C57.12.40.
      d. IEEE C57.12.00.
      e. IEEE C57.96.
   2. Medium-Voltage Circuit Breakers: IEEE C37.010.
   3. Low-Voltage Circuit Breakers: IEEE 1015 and IEEE C37.20.1.
   4. Low-Voltage Fuses: IEEE C37.46.
E. Study Report:
   1. Show calculated X/R ratios and equipment interrupting rating (1/2-cycle) fault currents on electrical distribution system diagram.
   2. Show interrupting (5-cycle) and time-delayed currents (6 cycles and above) on medium- and high-voltage breakers as needed to set relays and assess the sensitivity of overcurrent relays.
F. Equipment Evaluation Report:
   1. For 600-V overcurrent protective devices, ensure that interrupting ratings are equal to or higher than calculated 1/2-cycle symmetrical fault current.
   2. For devices and equipment rated for asymmetrical fault current, apply multiplication factors listed in the standards to 1/2-cycle symmetrical fault current.
   3. Verify adequacy of phase conductors at maximum three-phase bolted fault currents; verify adequacy of equipment grounding conductors and grounding electrode conductors at maximum ground-fault currents. Ensure that short-circuit withstand ratings are equal to or higher than calculated 1/2-cycle symmetrical fault current.

3.4 COORDINATION STUDY

A. Perform coordination study using approved computer software program. Prepare a written report using results of fault-current study. Comply with IEEE 399.
   1. Calculate the maximum and minimum 1/2-cycle short-circuit currents.
   2. Calculate the maximum and minimum interrupting duty (5 cycles to 2 seconds) short-circuit currents.

3. Calculate the maximum and minimum ground-fault currents.

B. Comply with IEEE 141 and IEEE 242 recommendations for fault currents and time intervals.

C. Transformer Primary Overcurrent Protective Devices:
   1. Device shall not operate in response to the following:
      a. Inrush current when first energized.
      b. Self-cooled, full-load current or forced-air-cooled, full-load current, whichever is specified for that transformer.
      c. Permissible transformer overloads according to IEEE C57.96 if required by unusual loading or emergency conditions.
   2. Device settings shall protect transformers according to IEEE C57.12.00, for fault currents.

D. Motors served by voltages more than 600 V shall be protected according to IEEE 620.

E. Conductor Protection: Protect cables against damage from fault currents according to ICEA P-32-382, ICEA P-45-482, and conductor melting curves in IEEE 242. Demonstrate that equipment withstands the maximum short-circuit current for a time equivalent to the tripping time of the primary relay protection or total clearing time of the fuse. To determine temperatures that damage insulation, use curves from cable manufacturers or from listed standards indicating conductor size and short-circuit current.

F. Coordination-Study Report: Prepare a written report indicating the following results of coordination study:
   1. Tabular Format of Settings Selected for Overcurrent Protective Devices:
      a. Device tag.
      b. Relay-current transformer ratios; and tap, time-dial, and instantaneous-pickup values.
      c. Circuit-breaker sensor rating; and long-time, short-time, and instantaneous settings.
      d. Fuse-current rating and type.
      e. Ground-fault relay-pickup and time-delay settings.
   2. Coordination Curves: Prepared to determine settings of overcurrent protective devices to achieve selective coordination. Graphically illustrate that adequate time separation exists between devices installed in series, including power utility company's upstream devices. Prepare separate sets of curves for the switching schemes and for emergency periods where the power source is local generation. Show the following information:
      a. Device tag.
      b. Voltage and current ratio for curves.
      c. Three-phase and single-phase damage points for each transformer.
      d. No damage, melting, and clearing curves for fuses.
      e. Cable damage curves.
      f. Transformer inrush points.
      g. Maximum fault-current cutoff point.

G. Completed data sheets for setting of overcurrent protective devices.

END OF SECTION 26 05 73

SECTION 26 09 23 - OCCUPANCY SENSORS

PART 1 - GENERAL

1.1 OCCUPANCY DETECTION TECHNOLOGY REQUIREMENTS

A. The occupancy sensor system shall sense the presence of human activity within the desired space and fully control the on/off function of the lights.

B. Sensors shall utilize passive infrared (PIR) technology, which detects occupant motion, to initially turn lights on from an off state; thus, preventing false on conditions. Ultrasonic or Microwave based sensing technologies shall not be accepted.

C. For applications where a second method of sensing is necessary to adequately detect maintained occupancy (such as in rooms with obstructions), a sensor with an additional “dual” technology shall be used.

D. Dual technology sensors shall have one of its two technologies not require motion to detect occupancy. Acceptable dual technology includes PIR/Microphonics (also known as Passive Dual Technology or PDT) which both looks for occupant motion and listens for sounds indicating occupants. Sensors where both technologies detect motion (PIR/Ultrasonic) shall not be acceptable.

E. All sensing technologies shall be acoustically passive meaning they do not transmit sounds waves of any frequency (for example in the Ultrasonic range), as these technologies have the potential for interference with other electronic devices within the space (such as electronic white board readers). Acceptable detection technologies include Passive Infrared (PIR), and/or Microphonics technology. Ultrasonic or Microwave based sensing technologies shall not be accepted.

1.2 OCCUPANCY SENSOR OPERATION REQUIREMENTS

A. Sensors shall offer a minimum on timer of at least 15 minutes, to prevent all cycling of lamps before they have burned for the lamp manufacturers minimum recommended time period. This timer shall be in addition to the regular occupancy time delay that keeps lights on after last detected occupancy. User shall be able to disable/enable and change the value of this timer.

B. Sensors shall utilize an occupancy time delay that keeps lights on after last detected occupancy. Factory default setting of the occupancy time delay shall be 10 minutes. Sensors with a longer factory default setting shall not be permitted as they greatly restrict energy savings potential.

C. Manual adjustment to the occupancy time delay to increase it shall be accommodated but shall not be allowed unless a calculation showing the resulting energy savings loss is presented to the building owner and specifying engineer.

D. Automatic adjustments to the occupancy time delay shall only be permitted if the controlling algorithm maximizes both lamp life and energy savings. For example, a shorter more energy saving time delay setting shall only be allowed if the resulting lamp life is also improved.

E. Installer, in accordance with manufacturer’s recommendation, shall determine final sensor location. All sensors shall be factory calibrated for optimum performance for its installed PIR lens and shall not require initial or subsequent field adjustment of detection sensitivity.

F. All sensor setting adjustments shall be digital and made using a push-button. Dip switches, analog dials, and/or the need for tools of any kind shall not be accepted.

G. The installing contractor shall be responsible for a complete and functional system in accordance with all applicable local and national codes.

1.3 MISC REQUIREMENTS

A. All steps in sensor manufacturing process shall occur in the USA; including population of all

electronic components on circuit boards, soldering, programming, wiring, and housing. Manufacturing facility must be ROHS compliant.

B. In high humidity or cold environments, the sensors shall be conformably coated and rated for condensing humidity and -40-degree Fahrenheit (and Celsius) operation.

C. All applicable products must be UL / CUL Listed or other acceptable national testing organization.

D. Sensors shall have a 5-year warranty.

1.4 APPROVED MANUFACTURER AND SUBSTITUTIONS

A. Approved manufacturer shall be Sensor Switch, Inc. (800) 727-7483 www.sensorswitch.com.

B. Substitutions must be submitted no less than 5 days prior to bid date. An AutoCAD drawing of the facility showing coverage patterns and technical data must be provided with substitution request. All substitutions must clearly identify all exceptions to the specifications with a detailed explanation as to the exception. If substitution is approved, the contractor shall bear the responsibility of a fully functional system to the owner's and specifying engineer/architect's satisfaction.

PART 2 - PRODUCTS

2.1 WALL SWITCH OCCUPANCY SENSORS – SMALL AREAS

A. Sensor shall provide wall-to-wall PIR detection such that small hand motions are detected out to 20 ft (6.10 m).

B. In areas with periodic or permanent obstruction to a sensor's field of view, sensors that utilize dual technology (PIR/Microphonics) detection shall be used (as specified in above section 1.1, *Occupancy Sensor Technology Requirements).*

C. For applications requiring independent control of two loads, a sensor with two dual relays and dual override switches shall be required. Each relay shall have independent programmable occupancy time delays.

D. Sensors shall be capable of switching both 120 VAC and 277 VAC and run off of 50/60 Hz power. A version capable of switching 347 VAC shall also be available. Load ratings shall be 800 W @ 120 VAC, 1200 W @ 277 VAC, 1500 W @ 347 VAC, and ¼ HP motor load.

E. Sensor shall recess into single gang switch box and fit a standard GFI opening.

F. Sensor shall meet NEC grounding requirements by providing a dedicated ground connection and intrinsically grounding through its mounting strap.

G. Line and load wire connections shall be interchangeable, such that installer cannot make an improper connection to a line/load in a manner that will cause malfunction or damage to the sensor.

H. Sensor shall not require a neutral connection regardless of number of poles and/or detection technology (only exception is versions with lighted push-buttons).

I. Sensor shall not allow any leakage of current to pass to the load when sensor is in the unoccupied (off) condition. Sensor shall not require a minimum load to be connected to function.

J. Sensor shall have optional features for photocell/daylight override, vandal resistant lens, low temperature/high humidity operation.

K. All sensor settings, including time delay and photocell settings shall be digital and accessible for adjustment via a push-button without requiring removal of cover plate or tools of any kind.

L. Wall Switch sensors shall have field programmable adjustments for selecting operational modes, occupancy time delays, minimum on time, and photocell set-point as applicable.

M. All models shall be capable of both Auto-On and Manual On operation.

N. All models shall be capable of a “Reduced Turn On” operation where the initial PIR turn on level is higher to eliminate PIR from reflective surfaces from being detected. PIR shall be returned to normal levels upon initial PIR detection.

O. All models shall have a “Predictive Off” mode where user can manually turn the lights off when leaving the room and still have them come on automatically when they return to space.

P. All models shall be capable of disabling override switch.

Q. Sensor shall be the following Sensor Switch model numbers. Device color and optional features as specified on individual datasheet.
   1. WSD (PIR)
   2. WSD 2P (PIR, Dual Relays, Auto On Pole 1/Manual On Pole 2)
   3. WSD PDT (PIR/Microphonics)
   4. WSD PDT 2P (PIR/Microphonics, Dual Relays, On Pole 1/Manual On Pole 2)
   5. WSD SA (PIR, Manual On by default)
   6. WSD PDT SA (PIR/Microphonics, Manual On by default)
   7. WSD NL (PIR, lighted push-button, neutral required)
   8. WSD PDT NL (PIR/Microphonics, lighted push-button, neutral required)
   9. WSD LV (PIR, low voltage, power pack required)
   10. WSD PDT LV (PIR/Microphonics, low voltage, power pack required)

2.2 WALL SWITCH OCCUPANCY SENSORS – LARGE AREAS

A. Sensor shall provide wall-to-wall PIR detection such that small hand motions are detected out to 40 ft (12.19 m).

B. In areas with periodic or permanent obstruction to a sensor’s field of view, sensors that utilize dual technology (PIR/Microphonics) detection shall be used (as specified in above section 1.1, *Occupancy Sensor Technology Requirements).*

C. For applications requiring independent control of two loads, a sensor with two dual relays and dual override switches shall be required. Each relay shall have independent programmable occupancy time delays.

D. Sensors shall can switch both 120 VAC and 277 VAC and run off of 50/60 Hz. A version capable of switching 347 VAC shall also be available. Load ratings shall be 13A each pole, ¼ HP motor load.

E. Sensor shall meet NEC grounding requirements by providing a dedicated ground connection and intrinsically grounding through its mounting strap.

F. Line and load wire connections shall be interchangeable, such that installer cannot make an improper connection to a line/load in a manner that will cause malfunction or damage to the sensor.

G. Sensor shall not require a neutral connection regardless of number of poles and/or detection technology.

H. Sensor shall not allow any leakage of current to pass to the load when sensor is in the unoccupied (Off) condition. Sensor shall not require a minimum load to be connected to function.

I. Sensor shall be the following Sensor Switch model numbers. Device color and optional features as specified.
   1. LWS(H) (PIR)
   2. LWS(H) 2P (PIR, Dual Relays)
   3. LWS(H) PDT (PIR/Microphonics)
   4. LWS(H) PDT 2P (PIR/Microphonics, Dual Relays)

2.3 LOW VOLTAGE OCCUPANCY SENSORS

A. The installing contractor shall install one or more sensors with PIR coverage areas that cover the entire space and all entrance points. Exact placement and quantity required shall be per manufacturer's best practice recommendations.

B. In areas with periodic or permanent obstruction to a sensor's field of view, sensors that utilize dual technology (PIR/Microphonics) detection shall be used (as specified in above section 1.1, *Occupancy Sensor Technology Requirements).*

C. Sensors shall utilize a digital PIR detector (dual element pyro-electric detector) component, to provide a high degree of RF immunity.

D. Sensors shall interconnect with other sensors and power/relay packs with class 2, three-conductor wire.

E. Sensors shall operate on 12 to 24 VAC or VDC and consume no more than 5 mA so that up to 14 sensors may be connected to a single power pack.

F. Upon initial power up, sensors must immediately turn on. Power packs may be wired on the line or load side of local switching and must not exhibit any delays when switch is energized.

G. Each designated zone shall contain one sensor with a SPDT class 2 auxiliary relay, providing an input to building automation system (BAS). All sensors in designated zone shall communicate to sensor with relay for status to BAS. Sensor relay coil shall energize in the unoccupied state to load share the low voltage current from power pack. Note that power pack must be installed on the Line side of the local toggle switch for auxiliary relay to work properly.

H. Sensors shall have test mode that temporarily shortens/disable all time delays (e.g., minimum on, occupancy, photocell transition, dimming rates) such that an installer can quickly test operation of sensor. Test mode shall time out and return sensor to normal operation should the installer forget to disable test mode after installation.

I. Sensors shall have optional features for on/off photocell control, automatic dimming control photocell, high/low occupancy-based dimming, and usage in low temperature/high humidity environments.

J. Sensors shall be the following Sensor Switch model numbers.
   1. CM 9 (PIR, Ceiling Mount, Standard Range)
   2. CM PDT 9 (PIR/Microphonics, Ceiling Mount, Standard Range)
   3. CM 10 (PIR, Ceiling Mount, Extended Range)
   4. CM PDT 10 (PIR/Microphonics, Ceiling Mount, Extended Range)
   5. WV 16 (PIR, Corner Mount, Wide View)
   6. WV PDT 16 (PIR/Microphonics, Corner Mount, Wide View)
   7. HW13 (PIR, Wall Mount, Hallway View)
   8. HM 10 (PIR, Surface Mount Box, High Bay Aisle Way)
   9. CM 6 (PIR, Ceiling Mount, High Bay 360°)

K. Sensors with a recessed profile are acceptable substitutes for above ceiling mount sensors (e.g. CM 9 => RM 9)

L. Fixture mounted box sensors are acceptable substitutes for above ceiling mount sensors (e.g. CM 9 => CMB 9)

2.4 POWER PACKS

A. Power packs shall accept and switch 120 or 277 VAC, be plenum rated, and provide class 2 power for up to 14 remote sensors.

B. Power pack shall securely mount to junction location through a threaded ½ inch chase nipple. Plastic clips into junction box shall not be accepted. All class 1 wiring shall pass through chase nipple into adjacent junction box without any exposure of wire leads. Note: UL Listing under

Energy Management or Industrial Control Equipment automatically meets this requirement, whereas Appliance Control Listing does not meet this safety requirement.

C. When required by local code, power pack must install inside standard electrical enclosure and provide UL recognized support to junction box. All class 1 wiring is to pass through chase nipple into adjacent junction box without any exposure of wire leads.

D. Power pack shall incorporate a Class 1 relay and an AC electronic switching device. The AC electronic switching device shall make and break the load, while the relay shall carry the current in the on condition. This system shall provide full 20 Amp switching of all load types and be rated for 400,000 cycles.

E. Power packs shall be single circuit, or two circuits. Slave packs may be used to control additional circuits. When two circuit power packs, or slave packs are used, the power packs must be wired directly to circuit breaker. Otherwise, power packs may be wired on the line or load side of the local switch.

F. Power packs shall be the following Sensor Switch model numbers.
   1. PP20 (Single Pole)
   2. PP20 2P (Two Pole)
   3. SP20 (Slave Pack)

2.5 LINE VOLTAGE OCCUPANCY SENSORS

A. Sensors shall be self-contained and accept Class 1 wiring directly without the use of a power pack.

B. The installing contractor shall install one or more sensors with PIR coverage areas that cover the entire space and all entrance points. Exact placement and quantity required shall be per manufacturer's best practice recommendations.

C. In areas with periodic or permanent obstruction to a sensor's field of view, sensors that utilize dual technology (PIR/Microphonics) detection shall be used (as specified in above section 1.1, *Occupancy Sensor Technology Requirements).*

D. Sensors shall utilize a digital PIR detector (dual element pyro-electric detector) component, to provide a high degree of RF immunity.

E. Line and load wire connections shall be interchangeable, such that installer cannot make an improper connection to a line/load in a manner that will cause malfunction or damage to the sensor.

F. Multiple sensors controlling the same load shall be wired in parallel.

G. For applications requiring independent control of two loads, a sensor with two dual relays shall be required. Each relay shall have independent programmable occupancy time delays.

H. Dual relay sensors shall have an optional operational mode called "Alternating On" where when during unoccupied periods, one relay is always left closed (thus one load is always on). The relay that is left closed alternates each cycle so that the aging of the connected lamps is even.

I. Sensors shall be capable of switching both 120 VAC and 277 VAC and run off of 50/60 Hz power. A version capable of switching 347 VAC shall also be available. Load ratings shall be 800 W @ 120 VAC, 1200 W @ 277 VAC, 1500 W @ 347 VAC, and ¼ HP motor load.

J. Specific sensors capable of switching 5 Amps of two phase power (208/240 or 480 VAC) shall be available. These sensors shall always simultaneously switch both phases as per NEC guidelines.

K. Wall mounted sensors must be installed at 7 to 8 feet above the floor. Single and two circuit units shall be available.

L. High bay sensors controlling HID Bi-Level must incorporate a "Start to High" timer on initial power

up to provide full light output for up to 20 minutes to prevent shortened lamp life.

M. Sensors shall have test mode that temporarily shortens/disable all time delays (e.g., minimum on, occupancy, photocell transition, dimming rates) such that an installer can quickly test operation of sensor. Test mode shall time out and return sensor to normal operation should the installer forget to disable test mode afterinstallation.

N. Sensors shall have optional features for on/off photocell control, automatic dimming control photocell, high/low occupancy-based dimming, and usage in low temperature/high humidity environments.

O. Sensors shall be the following Sensor Switch model numbers.
   1. CMR 9 / CMR 9 2P (Standard Range 360□, PIR, Ceiling Mount – Single / Two Pole)
   2. CMR PDT 9 / CMR PDT 2P (Standard Range 360□, PIR/Microphonics Dual Technology, Ceiling Mount – Single / Two Pole)
   3. CMR 10 / CMR 10 2P (Extended Range 360□, PIR, Ceiling Mount – Single / Two Pole)
   4. CMR PDT 10 / CMR PDT 10 2P (Extended Range 360□, PIR/Microphonics Dual Technology, Ceiling Mount – Single / Two Pole)
   5. CMRB 10 / CMRB 10 2P (Extended Range 360□, PIR, Fixture Mount Box – Single / Two Pole)
   6. CMRB PDT 10 / CMRB PDT 10 2P (Extended Range 360□, PIR/Microphonics Dual Technology, Fixture Mount Box – Single / Two Pole)
   7. WVR 16 / WVR 16 2P (Wide View, PIR, Wall Mount – Single / Two Pole)
   8. WVR PDT 16 / WVR PDT 2P (Wide View, PIR/Microphonics Dual Technology, Wall Mount – Single / Two Pole)
   9. CMR 6 / CMR 6 2P (High Bay 360□, PIR, Ceiling Mount – Single / Two Pole)
   10. CMRB 6 / CMRB 6 2P (High Bay 360□, PIR, Fixture Mount Box – Single / Two Pole)
   11. CMRB 50 / CMRB 50 2P (High Bay Aisleway, PIR, Fixture Mount Box – Single / Two Pole)
   12. HMRB 10 (High Bay End-of-Aisle, PIR, Fixture Mount Box)

P. Sensors with a recessed profile are acceptable substitutes for above ceiling mount or fixture mount sensors (e.g. CMR 9 => RMR 9)

2.6 INDOOR PHOTOCELLS AND DAYLIGHT HARVESTING CONTROLS

A. Low voltage photocell shall accept 12 to 24 VAC or VDC and provide a SPDT relay for interface with remote switching system. Sensor shall interface with occupancy sensors, directly with power pack, or other system as shown.

B. Photocell shall provide for an on/off set-point, and a dead band to prevent the artificial light from cycling. Delay shall be incorporated into the photocell to prevent rapid response to passing clouds.

C. Photocell set-point and dead band shall be automatically calibrated through the sensor's microprocessor by initiating an "Automatic Set-point Programming" procedure. Further adjustment may be made manually if needed.

D. Dead band setting shall be verified and modified by the sensor automatically every time the lights cycle to accommodate physical changes in the space (i.e., furniture layouts, lamp depreciation, or lamp outages).

E. Low voltage dimming sensors shall accept 12 to 24 VAC or VDC (from power pack or other low voltage source) and control 0 to 10 VDC dimmable ballasts by sinking up to 20 mA of class 2 current (typically 40 or more ballasts).

F. Low voltage dimming sensor's set point shall be automatically calibrated through the sensor's microprocessor by initiating the "Automatic Set-point Programming" procedure. Min and max dim settings as well as set-point may be manually entered.

G. Low voltage dimming sensors shall be equipped with an automatic override for 100-hour burn-in of lamps. This feature must be available at any time for lamp replacements. (Note: This

function should be performed prior to any dimming of the lamps including the “auto set-point” setting.)

H. Combination photocell/dimming sensors shall accept 12 to 24 VAC or VDC (from power pack or other low voltage source) and control the on/off function as well as the dimming function of 0 to 10 VDC dimmable ballasts.

I. Combination photocell/dimming sensor’s set-point and dead band shall be automatically calibrated through the sensor’s microprocessor by initiating the “Automatic Set-point Programming” procedure. Min and max dim settings as well as set point may be manually entered.

J. Combination photocell/dimming sensors shall be equipped with an automatic override for 100-hour burn-in of lamps. This feature must be available at any time for lamp replacements. (Note: This function should be performed prior to any dimming of the lamps including the “auto set-point” setting.)

K. Dual zone option shall be available for photocell, dimming, or combination units. The second zone shall be controlled as an “offset” from the primary zone and shall be the zone farthest from the natural light source.

L. Stand-alone ambient light sensors (CM ALC version only) shall interface directly with the 0 to 10 VDC, without any other power source connection, and control dimmable ballasts by sinking up to 20 milliamps of class 2 current. Sensor shall incorporate a photodiode viewing out of a ceiling enclosure at a 30-degree angle from horizontal to detect diffused light from the ambient and artificial sources. Sensor shall allow for removal of response delays for adjustment, however provide dampening delay for normal operation. Settings shall be made manually.

M. Line voltage versions of the above described photocell and combination photocell/dimming sensors shall be capable of switching both 120 VAC and 277 VAC and run off of 50/60 Hz power. A version capable of switching 347 VAC shall also be available. Load ratings shall be 800 W @ 120 VAC, 1200 W @ 277 VAC, 1500 W @ 347 VAC, and ¼ HP motor load.

N. Line voltage versions of the above described dimming sensors shall be capable of powering off 120/277 VAC.

O. Line voltage versions of the above described photocell and combination photocell/dimming sensors shall be capable of switching 5 Amps of two phase power (208/240 or 480 VAC) shall be available. These sensors shall always simultaneously switch both phases as per NEC guidelines.

P. Sensors shall be the following Sensor Switch model numbers.
   1. CM PC (Photocell, On/Off, Low Voltage, Ceiling Mount)
   2. CM ADC (Dimming Photocell, Low Voltage, Ceiling Mount)
   3. CM PC ADC (Combination Photocell/Dimming Sensor, Low Voltage, Ceiling Mount)
   4. CM PC DZ, CM ADC DZ, or CM PC ADC DZ (Dual Zone, Low Voltage)
   5. CM ALC (Stand Alone Ambient Light Sensor for Daylight Harvesting)
   6. CMR PC (Photocell, On/Off, Line Voltage, Ceiling Mount)
   7. CMR ADC (Dimming Photocell, Line Voltage, Ceiling Mount)
   8. CMR PC ADC (Combination Photocell/Dimming Sensor, Line Voltage, Ceiling Mount)
   9. CMR PC DZ, CMR ADC DZ (Dual Zone, Line Voltage)

Q. Sensors with a recessed profile are acceptable substitutes for above ceiling mount or fixture mount sensors (e.g. CMR PC => RMR PC)

R. Fixture mounted box sensors are acceptable substitutes for above ceiling mount sensors (e.g. CMR PC => CMRB PC)

END OF SECTION 26 09 23

SECTION 26 09 43 - LIGHTING CONTROL SYSTEM – RELAY PANELS

PART 1 - GENERAL

1.1 INTRODUCTION

A. The work covered in this section is subject to all the requirements in the General Conditions of the Specifications. The Contractor shall coordinate all the work in this section with all the trades covered in other sections of the specification to provide a complete and operable system.

1.2 SYSTEM DESCRIPTION

A. Install a low voltage switching system consisting of relay panels and intelligent switches connected by a data line, as well as all associated wiring.

B. The system includes a DIN rail-mounted automation module, photocontrol module and/or other low voltage control devices. These devices are totally compatible with the manual operation of the data line switches.

C. Requirements are indicated elsewhere in the specifications for work including, but not limited to, raceways and electrical boxes and fitting required for installation of control equipment and wiring.

1.3 QUALITY ASSURANCE

A. Manufacturers: Firms regularly engaged in the manufacture of lighting control equipment and ancillary equipment, of types and capacities required, whose products have been in satisfactory use in similar service for not less than 5 years. Manufacturer shall be ISO 9001 certified.

B. Component Pre-testing: All components and assemblies are to be factory pre-tested prior to installation.

C. System Support: Factory applications engineers shall be available for telephone support.

D. NEC Compliance: Comply with NEC as applicable to electrical wiring work.

E. NEMA Compliance: Comply with applicable portions of NEMA standards pertaining to types of electrical equipment and enclosures.

F. UL Approvals: Remote panels are to be UL Listed under UL 916 Energy Management Equipment.

G. FCC Emissions: All assemblies are to be in compliance with FCC emissions Standards specified in Part 15 Subpart J for Class A application.

1.4 SUBMITTALS

A. Shop Drawings: Submit dimensional drawings of all lighting control system components and accessories.

B. One-Line Diagram: Submit a one-line diagram of the system devices and cabling.

C. Typical Wiring Diagrams: Submit typical wiring diagrams for all components including, but not limited to, relay panels, relays, low voltage data line switches, occupancy sensors and daylighting controls.

1.5 MANUFACTURERS

A. Acceptable manufacturers for lighting control system are Watt Stopper Lighting Control & Design, Leviton, Lutron and Square D Clipsal.

PART 2 - MATERIALS AND COMPONENTS

2.1 SMARTWIRED SWITCHING (SWS) RELAY PANELS

A. Description: Modular Relay Panels shall be UL Listed and consist of the following:
   1. Tub: Empty NEMA 1 enclosure that can accept an interior sized to accept up to 12, 24, or 48 mechanically latching relays.
   2. Power Supply: As required
   3. Cover: Surface or flush as required, with captive screws in a hinged, lockable configuration.
   4. Interior: Interiors shall be provided with up to 12, 24, or 48 installed and tested relays as shown on the Drawings.
   5. Panel shall be provided with provisions for additional components, data connections, etc.

B. Features
   1. Relays shall be momentary-pulsed mechanically latching contactors with plug in connector. Relays shall have mechanically latching contacts with single moving part design for improved reliability. Relays will have the following characteristics:
      a. Coil
         1) Magnetically held, momentary coil activation (50 milliseconds).
         2) 2.2 VA max per relay to allow up to 20 relays to be controlled in parallel using class 2 wiring.
      b. Power Contacts
         1) 20-amp tungsten and NEMA electronic ballast rated.
         2) Rated for 50,000 ON/OFF cycles at full load.
         3) Support #10 - #14 WG solid or stranded wire.
         4) 120, 277 and 347 volts rated.
         5) Standard 1-year warranty.
      c. 30 VAC isolated contacts for status feedback and pilot light indication.
      d. FCC approved for commercial and residential use.
   2. Next to each relay shall be an individual override button and a bi-color LED to indicate status.
   3. Panels shall support the “blink warning” function, with LED indication for each relay.
   4. Captive screw terminations will be provided for all wiring connections.
   5. Each channel button’s dry control contact input terminal shall accept either 2 or 3-wire, maintained or momentary inputs. They shall also accept a 2-wire toggling input.
   6. Each channel shall also have an associated 1 amp, 30 VDC isolated contact which may be used for status feedback or pilot light control.
   7. The unit shall provide LED status indication of the power supply status. Access to 24VAC and 24V rectified power for accessory devices shall be provided within the panel.
   8. The panel shall have an integrated DIN rail for mounting data line control modules.

2.2 NETWORK DATALINE

A. Description
   1. The intelligence in multiple panels shall be linked over a single data line.
   2. The data line, in addition to linking together multiple relay panels, shall be capable of extending out from the electrical closet, and provide a single communications bus to allow data line switches to communicate with the panels.
   3. The data line can also connect to a single network clock or a single BMS interface module mounted in the interior of a relay panel or a separate enclosure.

B. Features
   1. Dataline shall be 18 AWG, 4 unshielded copper conductors (two independent twisted pairs) meeting Class 2P NEC code requirements. The data line can be run in a loop, serial, or star configuration. Minimum 1 turn per 3 inches; capacitance 30pF/foot max.
   2. Maximum length for all data line wire in the system is 1,500 feet without repeaters.

3. Maximum number of data line devices (panels/switch units/controllers) is 64 without a repeater.

2.3 IDENTIFICATION

A. Description
1. To allow individual overrides, data line switches shall be terminated to each panel's 4-wire local data line. Switches shall be available in single, dual, quad, or octal (1-button, 2- button, 4-button, or 8-button) designs. The single, dual, and quad devices shall mount in a standard single gang box; the octal version in a two-gang box.
2. Each button in a switch module can be individually programmed. Each button can control any one of the following options:
   a. Any individual relay in any single panel.
   b. Any group of relays in any single panel.
3. For special applications see Drawing notes.

B. Features
1. Provide switches as shown on the Drawings for overrides, and programmed for specific applications such as
   a. Blink notice
   b. Cleaning Scenario
   c. Parallel operation
2. Back Lit LEDs as required

2.4 NETWORK CLOCK

A. Description
1. Provide a network clock. Network clock can be used to schedule timed scenarios vs. digital input signals.
2. Astronomical type time clock to be included.

2.5 SMARTWIRED PHOTOCONTROL MODULE

A. Description
1. A single photocell shall be mounted in an appropriate location for measuring exterior light levels. The sensor shall connect to a separate photocontrol module via the local data line, which provides power to the unit. No extra wires shall be required.
2. The photocontrol module shall be designed to integrate seamlessly with either the network clock or the BMS interface module.
3. The photocontrol module shall measure the actual exterior light level. Each of the eight global channels shall have the ability to be assigned a different trip level.

2.6 BMS INTERFACE MODULE

A. Description: The BMS interface module shall be used in lieu of the network clock to provide the same lighting control functions (except for the astronomic function) but shall allow an external automation device to provide the signal that changes channel status from "occupied" to "unoccupied" (after-hours).

B. Features: Automatically detects the presence of the photocontrol module on the data line and adds the dark scenarios to the menus, accepting actual light level readings for the following scenarios:
1. Dark ON/Dark OFF
2. Dark ON/Schedule OFF

2.7 TELEPHONE CONTROL MODULE

A. Description: The telephone control module shall allow building occupants to override the lighting on or off using a touch-tone telephone.

2.8 UNIVERSAL SWITCH INTERFACE MODULE

A. Description: Provide a universal switch interface module to wire non-data line switches to the SWS network or to accept contact closures from other systems.

2.9 AUTOMATIC CONTROL SWITCH

A. Description
1. The automatic control switch shall be a line voltage, push-button wall switches capable of ON/OFF manual operation and of receiving control signals through the temporary interruption of power to the circuit via the relay panel.
2. Occupants shall have a five-minute time delay to press the switch, keeping the lights on until the end of the next sweep interval.

B. Features
1. 120 VAC or 277 VAC models with matching wall plate included.
2. Audible beep during time delay can be enabled or disabled without removing the switch face plate.
3. Locator LED.

2.10 ACCESSORY ENCLOSURE

A. Description: Provide an Accessory Enclosure with integral DIN rail mounting area and connections for data line and optional power supply as needed for remote mounting of intelligence modules.

PART 3 - EXECUTION AND SUPPORT SERVICES

3.1 INSTALLATION

A. Dataline switches and/or photocells shall be mounted in the spaces as indicated on the Reflected Ceiling Plans. Each low voltage wire shall be labeled clearly indicating which relay panel it connects to. Use only properly color-coded, stranded #18 AWG (or larger) wire as indicated on the Drawings. All relays and switches shall be tested after installation to confirm proper operation, and all connected loads shall be recorded on the relay schedule for each panel.

B. The relay panels shall be mounted in electrical closets as indicated on the Drawings. The numbered relays in the panel shall be wired to control the power to each load as indicated on the Panel Wiring Schedules included in the Drawings. All power wiring will be identified with the circuit breaker number controlling the load. If multiple circuit breaker panels are feeding into a relay panel, wires shall clearly indicate the originating panel's designation.

3.2 CONTRACTOR PROVIDED INFORMATION

A. The Contractor shall provide system documentation after the equipment has been installed.
1. Relay Panels: Panels shall be numbered consecutively beginning at #01 as shown on the Drawings. Individual relay load descriptions and the channels to which they are smart wired shall be recorded on the SWS Relay Schedule form provided with each panel.
2. Intelligent Dataline Switches: Each intelligent switch on a relay panel's local data line shall be numbered consecutively beginning with #01. This switch designation shall be recorded on the label provided on the front of the switch unit, under the wall plate. (For example, the switches connected to relay panel #02 would be numbered 02-01, 02-02, 02-03, etc.). The relays (or channels) controlled by each switch shall be recorded on the "SWS Switch Documentation" from provided with the relay panel.
3. Network Clock (or BMS Interface): The automation scenarios and operating data for each of the eight channels shall be recorded on the "Network Clock Automation Scenarios" form or "BMS Interface Automation Scenarios" form provided with the network clock or BMS interface module.
4. System installation and operation manual shipped with the network clock or BMS

interface module shall be provided to the Owner.

3.3 DOCUMENTATION

A. Manufacturer shall provide system documentation including:
   1. System 1-line showing all panels, number and types of switches and sensors, data line, and network timeclock of BAS interface unit.
   2. Drawings for each panel showing hardware configuration and numbering.
   3. Panel wiring schedules.
   4. Typical wiring diagrams for each component.

3.4 WARRANTY

A. Manufacturer shall provide a 1-year warranty for all system components.

3.5 SYSTEM STARTUP

A. Manufacturer shall provide a factory authorized to confirm proper installation and operation of all system components.

3.6 TRAINING

A. Manufacturer shall provide factory authorized application engineer to train Owner personnel in the operation and programming of the lighting control system.

END OF SECTION 26 09 43

SECTION 26 24 16 - PANELBOARDS

PART 1 - GENERAL

1.1 GENERAL REQUIREMENTS

A. All work specified herein shall be accomplished in accordance with the applicable requirements of Section 26 0000 - Electrical General.

B. Provide the panelboards indicated on the Drawings complete with overcurrent protection devices and spaces.

C. This section includes panelboards and distribution panelboards and associated auxiliary equipment rated 600 V or less as shown on the drawings.

D. Refer to panel schedule and one-line power diagram on drawings for specific requirements of each panel.

1.2 WORK INCLUDED

A. The work under this section shall include all labor, materials, accessories, services and equipment necessary to furnish and install panelboards, complete, as indicated on the Drawings and as specified herein.

B. Equipment schedules and specifications are based on the one manufacturer listed in the schedule. Other manufacturers of equal quality and performance may be submitted to the Engineer for review. When substitution of equipment is made, the Contractor shall be responsible for the costs of any item and engineering and construction revisions necessary in his or any other contract or trade that may be required to satisfy plans and specifications.

1.3 QUALITY ASSURANCE

A. Panels shall be factory assembled.

B. Coordination: Coordinate installation with architectural and structural features, equipment installed under other sections of the Specifications and electrical equipment to ensure panel access and so that clearance minimums are provided.

C. Components and installation shall be in accordance with NFPA 70, “National Electrical Code,” NEMA PBI, “Panelboards” and UL67 and UL50.

D. Panelboards and load centers shall be listed and identified for use with 75 degrees C rated conductors.

1.4 SUBMITTALS

A. Refer to Section 26 0000 - Electrical General for submittal requirements.

B. Manufacturers Product Data:
   1. Submit material Specifications and installation data for products specified under Part 2 - Products to include:
      a. Overcurrent protection devices
      b. Panelboards

C. Shop Drawings: Submit shop drawings to indicate information not fully described by the product data to indicate compliance with the Contract Drawings.
   1. Include electrical characteristics and ratings for each panelboard with dimensions, mounting, bus material, voltage, ampere rating, mains, poles and wire connection, and any accessories. Indicate method of ground bus attachment to enclosure.
   2. Include bussing diagram indicating each bussing overcurrent protection device position.
   3. Provide a schedule indicating overcurrent protection device type, trip and size, poles,

frame type, interrupting capacity.

PART 2 - PRODUCTS

2.1 MANUFACTURERS

A. Panelboard manufacturer shall be:
   1. Siemens
   2. Square D
   3. General Electric/ABB
   4. Cutler-Hammer

B. Coordination panelboard manufacturer (fusible panelboards) shall be:
   1. Cooper Bussman
   2. Mersen

2.2 GENERAL REQUIREMENTS

A. All panels and overcurrent protection devices shall be UL Listed and bear a UL Label. Where panel serves as service entrance equipment, panel shall bear a UL Label indicating suitability as service entrance equipment.

B. Panels shall be of the dead front safety type.

C. Provide panels complete with factory assembled circuit breakers or fuses connected to the bus bars in the positions shown on the panel schedules.

D. Provide all panelboards fully rated to the A.I.C. ratings noted on the schedules, but not less than 10,000 amperes for 120/208-volt panelboards and not less than 14,000 amperes for 277/480-volt panelboards. All devices in a panelboard shall be rated for the A.I.C. ratings shown for the panelboard.

2.3 BUSSING AND INTERIORS

A. All bus bars shall be aluminum. Main lugs and main overcurrent protection devices shall be UL approved for copper or aluminum conductors and shall be of a size range for the conductors indicated on the drawings. Each panel shall contain a full-size grounding bus. All panelboards shall contain a full size insulated neutral bus unless otherwise indicated on the drawings.

B. The neutral and ground bus shall have a sufficient number of lugs to singularly terminate each individual conductor requiring a connection.

C. Where designated on panel schedule as “space,” include all necessary bussing, device support and connections. Provide blank cover for each space.

D. Where specified or indicated on the drawings, provide sub-feed lugs adjacent to the mains or feed-through lugs opposite end of mains and increase box heights to provide additional cable bending and termination space. Lugs to be the same size and capacity as mains and rated for aluminum or copper conductor terminations.

2.4 ENCLOSURES

A. Panelboard width shall not be less than twenty inches unless indicated on the drawings (32" minimum for distribution panelboards).

B. Provide concealed captive clamping devices, concealed hinges and chrome lock for all flush mounted panels. Key all panels throughout project alike.

C. Where two section panels are required, both sections shall have fully rated bus, separate cabinets connected by conduit nipples. Interconnect sections with copper conductors with ampacity equal to rating of main bus. Route phase and neutral conductors together between panels. Provide separate trims for each section.

D. Panelboard trims for surface mounted panelboards shall be continuously hinged on one side so that when opened, wiring gutters are completely exposed.

E. Provide a label for each branch circuit, feeder, and main circuit breaker in distribution panels, permanently attached per the requirements of Section 26 0000 - Electrical General, 2.02A.

F. Cabinets, flush or surface mounted as indicated. NEMA PB-1, Type 1 enclosure, except where the following enclosure requirements are indicated:
   1. NEMA 250, Type 3R - Raintight.
   2. NEMA 250, Type 3S - Raintight and dust tight.
   3. NEMA 250, Type 4X - Corrosion-resistant stainless-steel enclosure, watertight, dust tight, and resistant to oil and coolant seepage. This type shall be used in kitchen areas.
   4. NEMA 250, Type 12 - Dust tight, drip proof, and resistant to oil and coolant seepage.

G. Enclosure shall be fabricated with galvanized steel. Trims shall have electrostatic applied ANSI gray enamel finish and adjustable indicating trim clamps for securing trim to the enclosure. Screwed-on trims shall not be acceptable. Trim shall have an angle support along the bottom serving as a support between trim and enclosure for safe installation and removal of trim.

H. Exterior Panels: Panelboards mounted outside of building shall be in NEMA type 3R enclosures. Panelboards shall have in addition to the standard specified items the following:
   1. Piano hinge
   2. Seams continuously welded
   3. Rolled lip around door and cabinet
   4. No knockouts or holes
   5. Neoprene gaskets on inside of door
   6. Stainless steel hardware
   7. Drip hood at top above door

2.5 CIRCUIT BREAKERS

A. Interrupting rating of all circuit breakers in panelboards shall have UL rating of not less than the RMS symmetrical amps indicated on the Drawings at system voltage. Series rated devices are acceptable with the following exceptions: devices used in distribution serving emergency, standby and multiple elevator loads (selective coordination).

B. Circuit breakers shall be provided with trip rating and poles as indicated on the drawings or specified herein.

C. Multi-pole breakers shall be common trip and common reset; tie handle connection between single pole breakers is not acceptable.

D. Branch circuit breakers in lighting and appliance panels shall be quick-make, quick-break, thermal magnetic type bolted to the bus. Circuit breakers in distribution type panel boards shall be bolted to the bus.

E. Provide the following special devices and accessories when indicated on the drawings or specified herein.
   1. Ground fault interrupting circuit breakers (GFI) where indicated on the drawings.
   2. Provide handle lock-on device (to prevent manually turning off device without removal) for all overcurrent devices where indicated on panelboard schedules, and for those protecting

      circuits serving fire alarm equipment, and for those dedicated for powering emergency battery-powered unit equipment.
   3. Provide UL Listed “SWD” switching duty circuit breakers on the devices indicated on the drawings.
   4. Provide shunt trip device for electrically tripping circuit breakers indicated on the drawings.
   5. Overcurrent protective devices for fire alarm circuits shall have handles that are factory-

marked in the color red.

2.6 FUSIBLE COORDINATION PANELBOARDS

A. Interrupting rating of all fuses in panelboards shall have UL rating of not less than the RMS symmetrical amps indicated on the Drawings at system voltage.

B. Fusible panelboards shall be listed to UL 67.

C. Furnish 10% or minimum of three fuses of each rating and type of fuse installed, in addition to any spares indicated in schedule.

D. Panelboard overcurrent device interrupting ratings shall be fully rated for the maximum available fault current and have a U.L. listed interrupting rating of 300kA and CSA certified interrupting rating of 200kA.

E. Panelboard circuits 100A and less shall incorporate overcurrent protection and branch-circuit disconnecting means into a single integrated component.

F. Interiors shall be factory assembled.

G. Panelboard shall be equipped with a six-space spare fuse compartment for storing replacement branch circuit fuses.

H. Bus bars shall be tin-plated copper.

I. Neutrals shall be fully rated.

J. Where equipped with main disconnect, permanently installed lockout means shall be provided on the disconnect for lockout tag procedures.

K. Main disconnect shall be quick-make, quick-break type.

L. Main and Branch Overcurrent Protection
   1. All overcurrent protective devices shall have a minimum U.L. listed interrupting rating of 300kA and CSA Certified interrupting rating of 200kA.
   2. Main overcurrent protective devices shall be 600Vac UL Listed minimum 300kA IR and CSA Certified minimum 200kA IR Class J time-delay fuses or Class J performance fuses.
   3. Branch circuit overcurrent protection shall be 600Vac UL Listed minimum 300kA IR and CSA Certified minimum 200kA IR finger-safe fuse with Class J performance fuses.
   4. Where panelboard main fuses are installed, fuses in panelboard branch circuits shall selectively coordinate with main fuses for all overcurrents up to 200kA.

M. Branch fused disconnects
   1. Device shall have visible ON/OFF indication with colored and international symbol markings.
   2. Device shall provide open fuse indication permanently installed neon indicating light.
   3. Device shall be UL and cUL Listed 600Vac/200kA or 125Vdc/100kA voltage/short-circuit current rating, load-break disconnect with amp ratings and number of poles as indicated on the panelboard schedule.
   4. Fuse and disconnect assembly shall be a finger-safe component with trim installed.
   5. Fuse and disconnect shall be interlocked to disallow fuse removal while fuse terminals are energized.
   6. No special tools shall be required for fuse removal.
   7. Devices shall have bolt-on style bus connectors.
   8. Device housing shall be clearly marked with device amperage.
   9. Device shall provide fuse amp rating rejection at the following ampacities to ensure continued circuit protection at the specified circuit rating: 15A, 20A, 30A, 40A, 50A, 60A, 70A, 90A and 100A.

PART 3 - EXECUTION

3.1 INSTALLATION

A. Provide from each flush mounted panelboard four (4) 3/4" empty conduits stubbed out above ceiling line and capped.

B. Install panelboards in accordance with NEMA PB1.1, “General Instructions for Proper Installation, Operation and Maintenance of Panelboards Rated 600 Volts or Less” and manufacturer’s written installation instructions.

C. Mount panelboards with top circuit breaker not more than 6'-6" above finished floor.

D. Only one conductor installed under terminal of individual circuit breakers. Form and train conductors in panel enclosure neatly parallel and at right angles to sides of box. Un-insulated conductor shall not extend beyond one-eighth inch from terminal lug.

E. Do not splice conductors in panels. Where required, install junction box adjacent to panel and splice or tap conductors in box.

F. Mounting and Support
   1. Mounting
      a. Enclosure shall be secured to structure by a minimum of four (4) fastening devices. Panelboards 600 amp and larger shall be secured by a minimum of eight (8) devices. A 1.5-inch minimum diameter round washer shall be used between head of screw or bolt and enclosure.
      b. Enclosures shall be mounted where indicated on the drawings or specified herein. Support from the structure with fastening device specified.
      c. Attach enclosure directly to masonry, concrete, or wood surfaces.
      d. Mounted enclosure on metal channel (strut), which is connected to structure with fastening device specified, for installation on steel structure or sheet rock walls.

G. Maintain conductor phase color code requirements described in the conductors and cables section of the specifications.

H. A typewritten branch circuit directory (based on as-built conditions) shall be provided for each panelboard and load center, permanently mounted on inside of door in a transparent, protective cover. Room number(s) or room name(s) shall be included in the circuit description in coordination with the final naming/numbering scheme for the project (e.g. “Office Receptacles” shall read “Office Receptacles – Rm. 202, 203”).

I. Any circuit breaker provided with arc energy reducing maintenance switch shall be labeled “BREAKER IS PROVIDED WITH ARC ENERGY REDUCING MAINTENANCE SWITCH”. Labeling shall be per the requirements of Section 26 0000 – Electrical General 2.02A.

J. Install panelboard ground fault circuit interrupter devices in accordance with installation guidelines of NEMA 289, “Application Guide for Ground Fault Circuit Interrupters.”

K. Tighten electrical connectors and terminals, including grounding connections, in accordance with manufacturer’s published torque-tightening values. Where manufacturer’s torque values are not indicated, use those specified in UL 486A and UL 486B.

L. Mounting of all panelboards and all hardware used for mounting shall be in accordance with the seismic criteria per the applicable building code.

M. Fusible coordination panelboards shall be shipped without branch circuit fuses installed. Branch circuit fuses shall be shipped separately with the chassis. Where main fuses are specified 100A or greater, equipment shall be shipped with main fuses installed.

END OF SECTION 26 24 16

SECTION 26 27 26 - WIRING DEVICES

PART 1 - GENERAL

1.1 GENERAL REQUIREMENTS

A. All work specified herein shall be accomplished in accordance with the applicable requirements of Section 26 0000 - Electrical General.

1.2 WORK INCLUDED

A. The work under this section shall include all labor, materials, accessories, services and equipment necessary to furnish and install wiring devices, complete, as indicated on the Drawings and as specified herein.

B. Equipment schedules and specifications are based on the one manufacturer listed in the schedule. Other manufacturers of equal quality and performance may be submitted to the Engineer for review. The following manufacturers are allowed:
   1. Hubbell
   2. Pass & Seymour
   3. Cooper
   4. Leviton
   5. Thomas & Betts/Steel City
   6. Walker/Wiremold

   When substitution of equipment is made, the Contractor shall be responsible for the costs of any item and engineering and construction revisions necessary in his or any other contract or trade that may be required to satisfy plans and specifications.

C. This section includes receptacles, connectors, switches, dimmers, timeclocks and cover plates.

1.3 QUALITY ASSURANCE

A. Wiring devices shall comply with applicable sections of NEMA Standard WD-1, NFPA 70, Article 100.

B. All special purpose receptacles shall be NEMA standard configuration.

C. Comparative devices by acceptable manufacturers are equal.

PART 2 - PRODUCTS

2.1 WIRING DEVICE DESCRIPTION AND MANUFACTURER

A. Single & Duplex Receptacles (20 Amp)
   1. Single or duplex type receptacle as indicated. 125V/20/A/2P/3W/G rating - NEMA - 5-20R type.
   2. Face color shall be grey (red where on emergency circuit).
   3. Manufacturer
      a. Hubbell 5362

B. GFCI Duplex Receptacles
   1. Duplex, feed-thru type ground fault current interrupter receptacle with test/reset buttons. 125V/20A/2P/3W/G rating - NEMA 5-20R type conforming to UL #498, UL #943 Class A and NEMA #WD1-4.02.
   2. Manufacturer
      a. Hubbell GF20 Series

C. Isolated Ground Single & Duplex Receptacles

1. Single or duplex type receptacles as indicated. 125V/20A/2P/3W/IG rating - NEMA 5-20R type ground internally isolated from receptacle frame and ground pigtail or terminal screw.
2. Manufacturer
   a. Hubbell IG5352

D. Clock/Flat Screen Receptacles
1. Single type receptacle with a recessed outlet clock hanger type mounting cover plate. 125V/15A/2P/3W/G - NEMA 5-15R type.
2. Manufacturer
   a. Hubbell RR151CH Series

E. Maintained Contact Switches
1. Provide toggle operated switches SPST, DPST, 3-way or 4-way operation as indicated. 277V/20A rating, quiet type, maintained contact, and a green hexagonal ground screw or ground pigtail, and side wired.
2. Manufacturer
   a. Hubbell 1221 Series (Color to match receptacles).

F. Momentary Contact Switches
1. Provide toggle or key operated switches as indicated with single circuit, 3-position center-off operation. 277V/20A rating, quiet type, momentary contact, spring loaded switch, and green hexagonal ground screw or ground pigtail, back and side wired.
2. Manufacturer
   a. Hubbell HBL 155* (Color to match receptacle).

G. Maintained Contact Slider Type Switch (For Multi-Ganging with Dimmers)
1. Slide-operated switch (to match dimmer), single pole, 3-way or 4-way operation as indicated, 120/277V, 20A rating.
2. Manufacturer
   a. Leviton Monet Series
   b. Lutron Nova T Series

H. Slider Type Incandescent Dimmers
1. Slide operated AC incandescent solid-state type dimmer with positive ON/OFF switching, integral surge protection, voltage stabilized output, RFI filtered and maximum lighting level adjustment. 120V/60Hz, unless noted otherwise, with lettering and/or nameplate as indicated. Dimmers shall have lowest profile available (wattage permitting).
2. Manufacturer
   a. Leviton Monet Series
   b. Lutron Nova T Series

I. Illuminated Toggle Switches
1. Single pole, 3-way or 4-way, as indicated, conforming to UL #20, NEMA #WDI-3.02 and
   F.S. #W-S-896E. 277V/20A rating, quiet type, maintained contact, and a green hexagonal ground screw or ground pigtail, back and side wired. Red colored toggle to glow when switch is on.
2. Manufacturer
   a. Hubbell HBL 1221PL

J. Weather-Resistant Receptacles
1. All 15- and 20-amp receptacles installed in damp or wet locations shall be listed weather- resistant type.

2.2 COVERPLATE DESCRIPTION AND MANUFACTURER - COVERPLATES

A. Flush Mounted Interior Receptacle/Switch Cover plates
1. Single or multi-gang to match device type. Medium size (4-7/8" min.), standard depth,

stainless steel.
2. Cover plates in mechanical/electrical equipment rooms, warehouse and high abuse areas shall be stainless steel, non-magnetic.
3. Manufacturer
   a. Hubbell SS Series (stainless steel)

B. Weatherproof Device Cover plates
1. Provide weatherproof "in use" cast aluminum lockable covers.
   a. Hubbell WP Series
   b. Thomas & Betts Russell Stoll Series

2.3 MISCELLANEOUS ITEMS

A. Time Switches
1. Electronic Astronomical Schedule Type
   a. 365-day scheduling, solid state, skip-a-day feature, daylight saving changeover, leap year adjusted with capacitor backup, DPDT-120V/20A rated contacts, light sensor input.
   b. Acceptable Manufacturer
      1) Tork DZS Series (channels as required)

B. Photoelectric Control Switches
1. Product Description
   a. Raintight photoelectric self-contained control for switching.
   b. Die-cast housing with adjustable sensor.
2. Manufacturers
   a. AMF/Paragon
   b. Tork 2100 Series

C. Lighting Contactor
1. Product Description
   a. Multi-pole contactor for switching branch circuit tungsten and ballast lighting and resistant heating loads.
   b. Number of poles as indicated (paralleling multiple contactors is acceptable), poles rated for 20 amperes @ 600V continuous duty.
   c. Mechanically held contactor with coil clearing contacts, operating coil voltage to match circuit characteristics.
   d. Housed in panelboard (if indicated).

D. Poke-thru Floor Devices
1. Product Description
   a. Refer to drawings for specific features.
   b. Device shall meet UL 514A requirements for scrub water test standards.
2. Manufacturer
   a. Hubbell
   b. Walker/Wiremold
   c. Thomas & Betts/Steel City

PART 3 - EXECUTION

3.1 INSTALLATION

A. All dimmer circuits shall have dedicated neutrals.

B. Install decorative plates on switch, receptacle, and blank outlets when indicated.

C. Install devices and wall plates flush and level.

D. Coordinate the exact location of wiring devices with other trades and architectural features. Do not locate devices on two different architectural finishes such as half on wall tile and half

on painted surface, unless noted otherwise.

E. Provide plaster rings in areas requiring them due to construction.

F. Where more than one device is indicated, arrange in gangs covered with one cover plate per manufacturer's instructions.

G. Where dimmer(s) and switch(es) are shown adjacent to one another, switch(es) shall be a maintained contact switch matching dimmer style, so that a common, multi-gang faceplate can be used.

H. Provide 6" long ground wire from grounding lug to all switches and receptacles to a screw type bonding device on the conduit or outlet box.

END OF SECTION 26 27 26

SECTION 26 28 16 - DISCONNECT SWITCHES

PART 1 - GENERAL

1.1 GENERAL REQUIREMENTS

A. All work specified herein shall be accomplished in accordance with the applicable requirements of Section 26 0000 - Electrical General.

1.2 WORK INCLUDED

A. The work under this section shall include all labor, materials, accessories, services and equipment necessary to furnish and install disconnect switches, up to 1200 amps, complete, as indicated on the Drawings and as specified herein.

B. Equipment schedules and specifications are based on the one manufacturer listed in the schedule. Other manufacturers of equal quality and performance may be submitted to the Engineer for review. When substitution of equipment is made, the Contractor shall be responsible for the costs of any item and engineering and construction revisions necessary in his or any other contract or trade that may be required to satisfy plans and specifications.

C. This section includes fuses.

D. This section includes individually mounted enclosed switches used for the following:
   1. Service disconnecting means.
   2. Feeder and branch-circuit protection.
   3. Motor and equipment disconnecting means.

1.3 SUBMITTALS

A. Product Data: For each type of switch and fuse accessory, and component indicated, include dimensions and manufacturer's technical data on features, performance, electrical characteristics, ratings, and finishes.

1.4 QUALITY ASSURANCE

A. Electrical Components, Devices, and Accessories: Listed and labeled as defined in NFPA 70, Article 100, by a testing agency acceptable to authorities having jurisdiction, and marked for intended use.

B. Comply with NEMA AB 1, NEMA KS 1 and UL 98.

C. Comply with NFPA 70.

D. Comply with NEMA FU 1.

E. Source Limitations: Provide fuses from a single manufacturer.

1.5 COORDINATION

A. Coordinate layout and installation of switches and components with other construction, including conduit, piping, equipment, and adjacent surfaces. Maintain required workspace clearances and required clearances for equipment access doors and panels.

PART 2 - PRODUCTS

2.1 MANUFACTURERS

A. Manufacturer of fusible and non-fusible switches shall be Cutler-Hammer, General Electric, Siemens or Square D Company.

B. Manufacturer of fuses shall be Bussman, Gould Shawmutt or Littelfuse.

2.2 ENCLOSED SWITCHES

A. All disconnect switches shall be heavy duty type with lockable handles.

B. Enclosed, non-fusible switch: NEMA KS 1.

C. Enclosed, fusible switch, 800 A and smaller: NEMA KS 1 with clips to accommodate specified fuses and interlocked with cover in closed position.

D. Furnish and install all safety type disconnecting switches indicated on the drawings, specified or required by the National and/or State Electrical Code. Switches shall be externally operable. If the size is not shown on the drawings, the subcontractor shall size the disconnect switch in accordance with name plate data of the equipment they serve.

E. Coordinate with other trades that may provide unit mounted disconnect switches prior to submission of bids.

F. Safety type disconnecting switches shall be heavy duty, 600-volt industrial type with quick-make, quick-break mechanism and interlocking cover which normally cannot be opened when the switch is in the “ON” position. Switches shall be single throw. Fusible switches shall be equipped with fuse clips to receive Bussman fuses. Switches shall have provision for padlocking in the open and closed positions. The operating handle shall be visible in either the on or off position.

G. All fused disconnect switches mounted above 6'-6" shall be hook stick operable.

2.3 INTERIOR

A. Switch blades shall be operated by rotating shaft directly connected to the operating handle mechanism. Switch blades shall be clearly visible in the open position. All switches shall have clear shields over the incoming line lugs. Line shields shall be attached in such a way that switch blade covers or arc shields need not be removed for line installation. Line and load lugs shall be front removable and suitable for copper or aluminum, 60/75-degree wire through 200A sizes, 75 degrees C wire for 400-800A sizes.

B. Current limiting type RK1 dual element time delay fuses shall be furnished and installed as necessary; rating shall be shown on drawing.

2.4 ENCLOSURES

A. All switches shall have NEMA type 1 general purpose enclosures unless indicated otherwise on the drawings. NEMA 3R covers shall be side hinged rather than top hinged. NEMA 1 and 3R switches through 200A sizes shall tangential knockouts for conduit line up against walls. NEMA 12 enclosures through 200A sizes shall be UL Listed for conversion to NEMA 3R usage by opening a factory provided drain hole. All types of enclosures shall have metal nameplates affixed to the cover to show the switch type and rating and clearly indicate “ON” and “OFF” direction of handle movement. Provide hubs on all NEMA 4, 4X, or 3R type disconnects.

B. Provide manufacturer’s standard factory applied finish unless otherwise indicated.

C. Provide phenolic engraved nameplate for disconnect switches.

2.5 CONTROL POLE

A. Where required a direct-action interlock or control pole shall be affixed to the switch base in such a manner as to operate positively and only with the opening and closing of the switch power poles.

2.6 CARTRIDGE FUSES

A. Characteristics: NEMA FU 1, nonrenewable cartridge fuse; class and current rating indicated; voltage rating consistent with circuit voltage.

PART 3 - EXECUTION

3.1 EXAMINATION

A. Examine utilization equipment nameplates and installation instructions. Install fuses of sizes and with characteristics appropriate for each piece of equipment.

B. Examine elements and surfaces to receive enclosed switches for compliance with installation tolerances and other conditions affecting performance. Proceed with installation only after unsatisfactory conditions have been corrected.

3.2 INSTALLATION

A. Locate disconnect switches to provide working clearance and full accessibility as required by the National Electrical Code.

B. Mounting and Support
   1. Mounting
      a. Enclosure shall be secured to structure by a minimum of four (4) fastening devices. A 1.5-inch minimum diameter round washer shall be used between head of screw or bolt and enclosure.
      b. Enclosure shall be mounted where indicated on the drawings or specified herein. Support from the structure with fastening device specified. Mount with operating handle at 60" AFF, unless other height is indicated.
      c. Attach enclosure directly to masonry, concrete, or wood surfaces.
      d. Mounted enclosure on metal channel (strut), which is connected to structure with fastening device.
      e. Where enclosure is not indicated on a wall or structure, construct a metal channel (strut) free standing frame secured to floor, pad, or other appropriate building structure.

C. Do not splice conductors in enclosure. Where required install junction box or wireway adjacent to enclosure and splice or tap conductors in box. Refer to number of conductors in a conduit limitation defined in the conductors and cables section of the Specifications and do not exceed.

3.3 CONNECTIONS

A. Install equipment grounding connections for switches with ground continuity to main electrical ground bus.

B. Tighten electrical connectors and terminals according to manufacturer's published torque-tightening values. If manufacturer's torque values are not indicated, use those specified in UL 486A and UL 486B.

3.4 CLEANING

A. On completion of installation, inspect interior and exterior of enclosures. Remove paint splatters and other spots. Vacuum dirt and debris; do not use compressed air to assist in cleaning.

B. Touch up paint all scratched or marred surfaces with factory furnished touch up paint of the same color as the factory applied paint.

END OF SECTION 26 28 16

SECTION 26 28 18 - ENCLOSED CIRCUIT BREAKERS

PART 1 - GENERAL

1.1 GENERAL REQUIREMENTS

A. All work specified herein shall be accomplished in accordance with the applicable requirements of Section 26 0000 - Electrical General.

1.2 WORK INCLUDED

A. The work required under this section of the Specifications consists of installation of enclosed circuit breakers up to 800 amps for use on systems 600 volts and below as indicated on the drawings. This Section includes individually mounted enclosed circuit breakers used for the following:
   1. Service disconnecting means.
   2. Feeder and branch-circuit protection.
   3. Motor and equipment disconnecting means.

B. The work under this section shall include all labor, materials, accessories, services and equipment necessary to furnish and install enclosed circuit breakers, complete, as indicated on the Drawings and as specified herein.

C. Equipment schedules and specifications are based on the one manufacturer listed in the schedule. Other manufacturers of equal quality and performance may be submitted to the Engineer for review. When substitution of equipment is made, the Contractor shall be responsible for the costs of any item and engineering and construction revisions necessary in his or any other contract or trade that may be required to satisfy plans and specifications.

1.3 SUBMITTALS

A. Product Data: For each type of circuit breaker accessory and component indicated, include dimensions and manufacturer's technical data on features, performance, electrical characteristics, ratings, and finishes.

1.4 QUALITY ASSURANCE

A. Electrical Components, Devices, and Accessories: Listed and labeled as defined in NFPA 70, Article 100, by a testing agency acceptable to authorities having jurisdiction, and marked for intended use.

B. Comply with NEMA AB 1, NEMA KS 1, UL 98, NEMA Standards Publication AB1-1975 and Federal Specifications W-C-375B classifications.

C. Comply with NFPA 70.

1.5 COORDINATION

A. Coordinate layout and installation of circuit breakers and components with other construction, including conduit, piping, equipment, and adjacent surfaces. Maintain required workspace clearances and required clearances for equipment access doors and panels.

PART 2 - PRODUCTS

2.1 MANUFACTURERS

A. Manufacturer of enclosed circuit breakers shall be Cutler-Hammer, General Electric, Siemens or Square D Company.

2.2 CIRCUIT BREAKERS

A. Molded-Case Circuit Breaker: NEMA AB 1, with interrupting capacity to meet available fault currents.
   1. Thermal-Magnetic Circuit Breakers: Inverse time-current element for low-level overloads, and instantaneous magnetic trip element for short circuits.

2.3 ENCLOSURES

A. NEMA 1 enclosures shall be fabricated from sheet steel with ANSI 49 gray baked enamel finish. Knockouts shall be provided in enclosures for circuit breakers through 225A frame sizes. Enclosures shall be provided with a means to padlock the circuit breaker in the OFF position.

B. NEMA 3R enclosures shall be fabricated from galvanically treated steel with ANSI 49 gray baked enamel finish. Enclosures for circuit breaker through 225A frame sizes shall have provisions for interchangeable conduit hubs. Enclosures shall be provided with a means to padlock the plate-type cover closed.

C. Provide manufacturer's factory applied finish unless otherwise indicated.

D. Provide phenolic engraved nameplate for circuit breakers.

PART 3 - EXECUTION

3.1 EXAMINATION

A. Examine elements and surfaces to receive enclosed circuit breakers for compliance with installation tolerances and other conditions affecting performance. Proceed with installation only after unsatisfactory conditions have been corrected.

3.2 INSTALLATION

A. Locate enclosed circuit breakers to provide working clearance and full accessibility as required by the National Electrical Code.

B. Mounting and Support
   1. Mounting
      a. Enclosure shall be secured to structure by a minimum of four (4) fastening devices. A 1.5" minimum diameter round washer shall be used between head of screw or bolt and enclosure.
      b. Enclosures shall be mounted where indicated on the drawings or specified herein. Support from the structure with fastening device specified. Mount with operating handle at 60" AFF, unless other height is indicated.
      c. Attach enclosure directly to masonry, concrete, or wood surfaces.
      d. Mounted enclosure on metal channel (strut), which is connected to structure with fastening device.
      e. Where enclosure is not indicated on a wall or structure, construct a metal channel (strut) free standing frame secured to floor, pad, or other appropriate building structure.

C. Do not splice conductors in enclosure. Where required install junction box or wireway adjacent to enclosure and splice or tap conductors in box. Refer to number of conductors in a conduit limitation defined in the conductors and cables section of the Specifications and do not exceed.

3.1 CONNECTIONS

A. Install equipment grounding connections for circuit breakers with ground continuity to main electrical ground bus.

B. Tighten electrical connectors and terminals according to manufacturer's published torque-tightening values. If manufacturer's torque values are not indicated, use those specified in UL 486A and UL 486B.

3.2 CLEANING

A. On completion of installation, inspect interior and exterior of enclosures. Remove paint splatters and other spots. Vacuum dirt and debris; do not use compressed air to assist in cleaning. Repair exposed surfaces to match original finish.

B. Touch up paint all scratched or marred surfaces with factory furnished touch up paint of the same color as the factory applied paint.

END OF SECTION 26 28 18

SECTION 26 29 13 - ENCLOSED CONTROLLERS, CONTACTORS AND RELAYS

PART 1 – GENERAL

1.1 SECTION INCLUDES
A. Lighting contactors.

1.2 RELATED REQUIREMENTS
A. Section 260553 Identification for Electrical Systems.

1.3 REFERENCE STANDARDS
A. NEMA ICS 2 - Industrial Control and Systems: Controllers, Contactors, and Overload Relays, Rated Not More Than 2000 Volts AC or 750 Volts DC; National Electrical Manufacturers Association; 2000 (R2005).
B. National Electric Code (NEC); Most Recent Edition Adopted by Authority Having Jurisdiction, Including All Applicable Amendments and Supplements.

1.4 SUBMITTALS
A. Product Data: Provide catalog sheets showing voltage, controller size, ratings and size of switching and overcurrent protective devices, short circuit ratings, dimensions, and enclosure details.
B. Test Reports: Indicate field test and inspection procedures and test results.
C. Manufacturer's Instructions: Indicate application conditions and limitations of use stipulated by testing agency. Include instructions for storage, handling, protection, examination, preparation, and installation of product.
D. Maintenance Data: Replacement parts list for controllers.

1.5 QUALITY ASSURANCE
A. Conform to requirements of NEC.
B. Products: Listed and classified by Underwriters Laboratories Inc. as suitable for the purpose specified and indicated.

PART 2 – PRODUCTS

2.1 MANUFACTURERS
A. Eaton Corporation; Cutler-Hammer Product: www.eaton.com.
B. General Electric Company: www.geindustrial.com.
C. Schneider Electric; Square D Products: www.schneider-electric.us.
D. Other approved equal.

2.2 GENERAL PURPOSE CONTACTORS
A. Description: NEMA ICS 2, AC general purpose magnetic contactor.
B. Coil operating voltage: As indicated on drawings.
C. Poles: As required to match circuit configuration and control function.
D. Enclosure: NEMA ICS 6, Type as required to meet conditions of installation.
E. Accessories:
   1. Selector Switch: ON/OFF/AUTOMATIC.
   2. Indicating Light: RED.
   3. Auxiliary Contacts: Two: One, normally open; one, normally closed.

2.3 LIGHTING CONTACTORS
A. Description: NEMA ICS 2, magnetic lighting contactor.
B. Configuration: Mechanically held, 3 wire control.
C. Coil operating voltage: As indicated on drawings.
D. Poles: As required to match circuit configuration and control function.

E. Contact Rating: Match branch circuit overcurrent protection, considering derating for continuous loads.
F. Enclosure: NEMA ICS 6, Type as required to meet conditions of installation.
G. Accessories:
1. Selector Switch: ON/OFF/AUTOMATIC.
2. Indicating Light: RED.
3. Auxiliary Contacts: Two: One, normally open; one, normally closed.

2.4 ACCESSORIES AND COMPONENTS
A. Control Switches and Stations:
1. Contacts: NEMA ICS 2, Form Z; A; B; C; or as required.
2. Contact Ratings: NEMA ICS 2, A150.
3. Selector Switch Operators: Three position rotary selector switch.
4. Pushbutton Operator: Type as indicated on the drawings.
5. Control Stations: Heavy duty oil tight type pushbutton station.
B. Solid-State Relays: NEMA ICS 2.
1. Contacts: NEMA ICS 2, Form Z; A; B; C; or as required.
2. Contact Ratings: NEMA ICS 2, Class A150.
3. Coil Voltage: 120 volts, 60 Hz, AC.
C. Clock Timers: NEMA ICS 2, Class A300, 24-hour, 7-day timer.
1. Astronomical dial.
2. Contacts: NEMA ICS 2, Form Z; A; B; C; or as required.
3. Contact Ratings: NEMA ICS 2, Class A150.
4. Coil Voltage: 120 volts, 60 Hz, AC.
D. Control Power Transformers: Machine tool transformer with isolated secondary winding.
1. Power Rating: 100 VA, Minimum.
2. Voltage Rating: As indicated on the drawings.
3. Primary and Secondary protection with fuses.
E. Auxiliary Contacts: NEMA ICS 2, 2 normally open contacts in addition to seal-in contact.
F. Cover Mounted Pilot Devices: NEMA ICS 5, heavy duty oil tight type.
G. Pilot Device Contacts: NEMA ICS 5, Form Z, rated A150.
H. Indicating Lights: Transformer, LED type.
I. Selector Switches: Rotary type.
J. Relays: NEMA ICS 2.

2.8 ENCLOSURES
A. Enclosures: NEMA ICS 6 Type 3R; or as indicated on the drawings.

PART 3 – EXECUTION

3.1 INSTALLATION
A. Install enclosed controllers, relays and devices where indicated, in accordance with manufacturer's instructions.
B. Install securely, in a neat and workmanlike manner, as specified in NECA 1.
C. Provide supports in accordance with Section 260529 Hangers and Supports for Electric Systems.
D. Height: 5 ft to operating handle.
E. Provide engraved plastic nameplates; refer to Section 260553 Identification for Electrical Systems for product requirements and location.
F. Neatly type label inside each motor controller door identifying motor served, nameplate horsepower, full load amperes, code letter, service factor, and voltage/phase rating. Place label in clear plastic holder.
G. Prepare wiring diagram for interconnecting devices.

3.2 FIELD QUALITY CONTROL

A. Perform field inspection and testing in accordance with Section 014000 Quality Requirements.
B. Inspect and test in accordance with NETA STD ATS, except Section 4.
C. Perform inspections and tests listed in NETA STD ATS, Section 7.16.1.

END OF SECTION 26 29 13

SECTION 26 43 13 - SURGE PROTECTIVE DEVICES (SPD)

PART 1 - GENERAL

1.1 DESCRIPTION

A. These specifications describe the electrical and mechanical requirements for a hybrid high-energy power conditioning filter incorporating surge protective devices and high-frequency electrical line noise filtering. The specified unit shall provide effective high-energy surge protection, surge current diversion, high-frequency attenuation, and line control in ANSI/IEEE C62.41.1-2002 environments connected on the load side of the facility's meter or main overcurrent device. The unit shall be connected in parallel with the facility's wiring system.

1.2 QUALITY ASSURANCE

A. The requirements of the following standards shall become a part of this Specification by reference:
   1. American National Standards Institute and Institute of Electrical and Electronic Engineers (ANSI/IEEE C62.41.1-2002, C62.41.2-2002, and C62.45-2002)
   2. Canadian Standards Association (CSA)
   3. Federal Information Processing Standards Publication 94 (FIPS PUB 94)
   4. National Electrical Manufacturers Association (NEMA)
   5. National Fire Protection Association (NFPA 70 (NEC), 75 and 78)
   6. Underwriters Laboratories Inc. (UL 1449 3rd Edition and 1283)
      The unit shall be UL and cUL 1449 3rd Edition Listed as a Surge Protective Device.

B. Acceptable Manufacturers
   1. Current Technology
   2. Thor Systems

C. Testing: The unit shall be thoroughly factory-tested before shipment. Testing of each unit shall include but shall not be limited to quality assurance checks, MCOV and clamping voltage verification tests.

D. Warranty: The manufacturer shall provide a minimum 5-year warranty from date of shipment against failure when installed in compliance with applicable national/local electrical codes and the manufacturer's installation, operation and maintenance instructions.

E. Submittal Documentation: Documentation of unit's UL 1449 3rd Edition Voltage Protective Rating (VPR) shall be included as required product data submittal information. Manufacturer shall make available upon request certified documentation of applicable Location Category Testing in full compliance with ANSI/IEEE C62.41.1-2002, C62.41.2-2002, and C62.45-2002 Guidelines. The manufacturer shall furnish an equipment manual with installation, operation, and maintenance instructions for the specified unit. Electrical and mechanical drawings shall be provided by the manufacturer which show unit dimensions, weights, mounting provisions, connection details and layout diagram of the unit.

PART 2 - PRODUCTS

2.1 GENERAL MATERIALS REQUIREMENT

A. The unit shall provide all modes of protection: line to neutral, line to ground, and neutral to ground.

B. High Frequency Tracking Filter: The unit shall include a UL1283 high-frequency extended range tracking filter. The filter shall reduce fast rise-time, high-frequency, error producing transients and electrical line noise to harmless levels, thus eliminating disturbances which may lead to system upset.

C. Unit Status Indicators: The unit shall include solid-state, long-life, externally mounted LED visual status indicators that indicate the status of MOV fusing.

D. Transient Counter: Front cover mounted transient counter (LCD or LED) shall totalize surges for all modes.

E. Nominal discharge current rating shall be In 20 kA.

F. Minimum SPD fault current ratings shall be 100Kaic.

PART 3 - APPLICATIONS

3.1 SERVICE ENTRANCE/MAIN DISTRIBUTION APPLICATIONS

A. The following table will indicate appropriate model numbers based on the electrical system ampacity. Surge current ratings are based on the Site Shield Risk Assessment Spreadsheet (TSI 067 3gSSH/r3).

B. SPDs connected to service equipment shall be listed as a type 1 SPD per UL1449 3rd Edition and shall have integral disconnect switch and shall be connected to bus on the load side of the main switch.

SERVICE ENTRANCE/MAIN DISTRIBUTION APPLICATIONS					
Manufacturers' Models			Electrical System Ampacity @ SPD Install Point	Surge Protection (kA)	
Current Tech	Thor Systems	Emerson/ APT		Per Mode	Per Phase
TG 300	TSrc 300	460 30	4000 – 6000A	300	600
TG 250	TSrc 250	460 30	2000 – 3000A	250	500
TG 200	TSrc 200	460 20	1200 – 1600A	200	400
TG 150	TSrc 150	460 15	600 – 1000A	150	300
TG 100	TSrc 100	460 10	125 – 400A	100	200

3.2 PANELBOARDS AND BRANCH PANEL APPLICATIONS

A. As indicated on the Drawings, provide a panelboard with externally mounted SPD with high-frequency filtering per requirements listed in this specification. Provide number of breakers, voltage/phases as indicated on the Drawings. SPD shall physically connect to the top or bottom of panelboard allowing for SPD to be repaired or replaced without opening the dead front of the panelboard.

B. SPDs connected to Panelboards or Branch Panels shall be listed as a type 1 or type 2 SPD per UL1449 3rd Edition and shall be circuit breaker connected.

C. The following table indicates appropriate model numbers based on the electrical system ampacity. Surge current ratings are based on Site Shield Risk Assessment Spreadsheet (attached #TSI 067 3gSSH/r3). SPDs connected to Panelboards and Branch Panels shall be listed as a type 1 or type 2 SPD per UL 1449 3rd Edition and shall be 30 Amp circuit breaker connected.

D.

PANELBOARDS AND BRANCH PANEL APPLICATIONS					
Manufacturer/Model Nos.			Electrical System Ampacity @ SPD Install Point	Surge Protection (kA)	
Current Tech	Thor Systems	Emerson/ APT		Per Mode	Per Phase
EGPE2 150	TSnc 150	440 15	600A	150	300
EGPE2 100	TSnc 100	440 10	125 – 400A	100	200
EGPE2 60	TSnc 050	440 05	Up to 100A	50	100

PART 4 - EXECUTION

4.1 INSTALLATION

A. Install wiring connection to distribution system as indicated on the Drawings. Wiring length should be kept to an absolute minimum (3' or less) and be as straight as possible.

B. Wire sizes to Service Entrance/Main Distribution SPD should be 4#6, 1#6 G - 1" conduit.

C. Wire sizes to Panelboard and Branch Panel SPD should be as indicated 4#10, 1#10G – ¾" conduit.

END OF SECTION 26 43 13

SECTION 26 51 00 - LIGHTING

PART 1 - GENERAL

1.1 DESCRIPTION

A. This section specifies the lighting system requirements.

B. All fixtures shall be current source, provided with lamps ready to use.

C. All interior lighting to be provided by City Lighting.

1.2 RELATED WORK SPECIFIED ELSEWHERE

A. Refer to another division for the ceiling systems.

B. Lighting system shall be coordinated with the ceilings.

1.3 SUBSTITUTIONS/VALUE ENGINEERING/PRICING

A. Substitution/value engineering requests are not accepted.

B. Pricing for lighting fixtures shall be separate from pricing for lighting controls (occupancy sensors, relay controls, dimming).

PART 2 - PRODUCTS

2.1 BALLASTS/DRIVERS

A. All LED drivers shall be constant current type with 0-10V dimming capability and proper heat dissipation.

B. Voltage shall be as defined on the drawings. Universal voltage shall be provided when available.

C. LED drivers shall have a 10-year minimum factory warranty.

D. LED drivers in unconditioned warehouses shall be suitable for ambient temperatures from -40°F(-40°C) to 131°F(55°C).

2.2 LAMPS

A. LED lamps shall be long-life LEDs rated at 100,000 hours minimum, L70. Color shall be 5000K or 6000K with a maximum 2.5 step MacAdam (2.5 SDCM) color variation.

B. LED lamps shall have a 10-year minimum factory warranty.

2.3 LIGHTING FIXTURES

A. Letter designations beside outlet symbols on Drawings correspond to letter designations in Lighting Fixture Schedule.

B. Recessed fixtures, where used in an insulated ceiling, shall be equipped with thermal protection and shall bear the UL label indicating the suitability for such use.

C. Lens material for recessed fixtures shall be 100% virgin acrylic, 0.125" thick in a square prism pattern like KSH-K-12 or as scheduled in Lighting Fixture Schedule.

D. Refer to lighting fixture schedule for other requirements, accessories and for additional fixture description.

E. Site lighting poles shall meet or exceed the local wind loading requirements of authority having jurisdiction.

F. Concrete pole bases shall be required for site lighting poles.

PART 3 - EXECUTION

3.1 LIGHTING FIXTURES

A. Provide lighting fixtures at all locations indicated by distinctive symbols or notes on the Drawings.

B. Lighting fixtures shall be secured to ceiling grid with clips or screws and two #12 steel wires mounted to opposite corners of light fixture secured to structure.

C. Locations of lighting fixtures on the electrical drawings are approximate. Refer to Architectural reflected ceiling plan for actual locations of fixtures and mounting heights.

D. Lighting fixtures installed in plaster and stucco ceiling shall have plaster frame and shall be of the flanged type.

E. Fixtures recessed in concealed-spline tile and in gypsum board ceilings shall be flanged.

F. Surface or recessed fixtures in or on plastered ceilings shall be supported from pieces of support channel spanning across the main supporting channels and shall not depend on the metal lath for support.

G. Each recessed lighting fixture shall have a trim to match the type of ceiling (exposed grid, metal panel, etc.) in which it is being installed, except where noted otherwise on the plans.

H. Each lighting fixture recessed in a concrete wall shall have a junction box or wiring compartment provided inside the fixture housing. Provide conduit access into the fixture concealed.

END OF SECTION 26 51 00

SECTION 26 81 15 - EMERGENCY RESPONDER RADIO COVERAGE SYSTEM

PART 1 - GENERAL

1.1 SCOPE

A. Furnish, install, and test a complete and operating Emergency Responder Communications Enhancement System. The system will support only the Fire Department and Emergency Medical Services ("Emergency Responders") radio system(s). Provisions for supporting other public safety systems (e.g. police); cell phone carriers; tenant's security, maintenance, operations personnel radio system, etc. are not required.

B. Obtain from the local jurisdiction all necessary data about the Emergency Responders' existing radio system including frequencies, donor site locations, and effective radiative power ("ERP").

C. The system shall amplify the Emergency Responders' radio signals to achieve a minimum signal strength of -95 dBm (inbound and outbound) in 95% of all areas of the building.

D. The final system design shall be based upon benchmark test data for the building that is obtained by the Contractor after substantial completion of the superstructure (i.e., tilt walls, roof, platforms, and mezzanines).

E. Final acceptance and approval is required from the local Authority Having Jurisdiction ("AHJ"), Owner, and Engineer prior to contract closeout.

1.2 RELATED SECTIONS

A. Section 28 3111 Intelligent, Addressable Fire Alarm System

B. The conditions of the Contract, including the General Conditions and Supplementary Conditions, and Division 1 - General Requirements, apply to work covered by this Section.

C. Comply with Mechanical, Electrical and Civil Division Sections, as applicable. Refer to other Divisions for coordination of work.

1.3 DEFINITIONS

A. Equipment and materials shall be approved for their designed use and performance. The term "approved" shall mean Underwriters Laboratories ("UL") Listed and/or FM Global ("FM") Approved and/or acceptable to the approval authorities.

B. Approval authorities shall include the Owner, authorized representative Harrington Group, Inc. ("Engineer"); insurance provider; the General Contractor; and the local building, fire, and/or code official(s) (i.e., AHJs), where applicable.

C. The term "Contractor" as used within this specification refers to the electrical and/or fire alarm system subcontractor(s).

1.4 INTENT

A. It is the intent of this specification section to provide the Owner's and AHJ's minimum design and construction requirements relative to the systems described herein. The

Contractor shall comply with the provisions of this section to the maximum extent possible while still complying with the provisions of the local codes and standards.

B. It is not the intent of this specification to provide complete design and construction requirements as may be stipulated by the applicable building and fire codes enforced in the local jurisdiction. The responsibility to identify and comply with all provisions of the local building and fire codes, including all applicable standards, rests with the design-build Contractor.

1.5 REFERENCES

A. City of Hagerstown, MD
   1. 2018 International Building Code w/ Local Amendments
   2. Maryland Fire Prevention Code

B. National Fire Protection Association (NFPA)
   1. NFPA 70® (2017) – National Electrical Code®
   2. NFPA 72® (2016) – National Fire Alarm and Signaling Code
   3. NFPA 100 (2016) – Standard for Emergency and Standby Power Systems
   4. NFPA 780 (2017) – Standard for the Installation of Lightning Protection Systems

C. The advisory provisions (Appendices/ Annexes) of the above referenced NFPA publications shall be considered to be mandatory, as though the word “shall” had been substituted for “should” wherever it appears.

D. Underwriters Laboratories, Inc. (“UL”)
   1. Fire Protection Equipment Directory (most current edition including supplements)
   2. Building Materials Directory (most current edition including supplements)
   3. Electrical Construction Materials Directory (most current edition including supplements)

E. FM Global (“FM”)
   1. FM Global Research Approval Guide (most current edition including supplements)

F. Comply with all other applicable federal, state and local codes and ordinances.

G. If there are any conflicts between these specifications and the referenced standards and publications, the most stringent requirements shall apply, as determined by the Engineer.

1.6 SYSTEM DESCRIPTION

A. General Requirements
   1. This specification contains performance, design, installation, testing, and servicing requirements for a new Emergency Responder Communications Enhancement System, which is to be installed within this facility.
   2. The scope of work includes implementation of the design of the system in

in accordance with this specification, approved shop submittal, and applicable codes; and completion of final operational tests.

3. Installation shall include the bidirectional amplifier ("BDA"), donor antenna, distributed antenna system ("DAS"), coaxial cable, coaxial cable connections, and/or radiating coaxial cable.
4. The scope of work includes all necessary configuration of the bidirectional amplifier and all other equipment to make the system fully functional.
5. The scope of work also includes provision of all necessary technical support personnel by the Contractor for completion of interim system inspections and tests as well as thorough acceptance tests by the various approval authorities.
6. The Contractor is responsible for coordination of the installation of all system related equipment with other sub-trades. Where conflicts exist, the Contractor is responsible for making the General Contractor aware of each situation so that the appropriate action may be determined.
7. The Contractor is responsible for identifying all permitting requirements and jurisdiction specific requirements related to the system installation and shall assure that all local requirements have been met with respect to required equipment, specific system functional requirements, etc.
8. All system components must comply with the applicable Federal Communication Commission regulations.

B. Performance Requirements
1. The system shall have acceptable emergency responder communications enhancement system coverage signal strength measurements in 95 percent of all areas of the building.
2. The inbound signal level shall be sufficient to provide not less than a Delivered Audio Quality ("DAQ") of 3.0 or an equivalent Signal-to-Interference-Plus-Noise Ratio ("SINR") applicable to the technology for either analog or digital signals. The outbound signal level shall be sufficient to provide not less than a DAQ of 3.0 or an equivalent SINR applicable to the technology for either analog or digital signals.

C. Design Requirements
1. All equipment shall be new and unused with a warranty of at least one year from the date of final inspection and acceptance by the approval authorities.
2. The bidirectional amplifier shall be capable of future modification or expansion in the event of frequency changes required by the FCC.
3. Amplification systems shall be by means of a radiating cable system, a distributed antenna system (in accordance with the FCC), or other means as approved by the AHJ, Owner, and Engineer.
4. All signal boosters shall conform to the following requirements.
   a. All components shall be contained in a National Electrical Manufacturer's Association ("NEMA") Type 4 waterproof cabinet.
   b. Battery systems used as an emergency power source shall be contained in a NEMA Type 4 waterproof cabinet.
   c. Signal booster and emergency battery system shall be supervised and monitored by a supervisory service or approved audible signal at a normally occupied location approved by the AHJ.
5. Equipment shall have FCC certification prior to installation.
6. All technical information and requirements for the system shall be obtained from the AHJ. The minimum technical information to be obtained are the required frequencies, the locations of all radio sites, and the effective power of all radio sites. Other information can be obtained as necessary to provide a complete system.

D. Power Supply Arrangement
The system shall be provided with dedicated standby power capable of operating the system for a duration of not less than 24 hours. The standby power shall be in accordance with Section 1203 of the IFC.

E. Overcurrent Protection
Each AC power circuit shall be provided with a separate overcurrent protection (i.e., transient voltage surge suppression "TVSS") device in accordance with Article 240 of NFPA 70. All low voltage power conductors associated with the system passing from the interior to the exterior of a structure shall be protected with listed fast-acting TVSS devices.

F. Lightning Protection
The system shall be provided with lightning protection in accordance with NFPA 780.

1.7 SUBMITTALS

Only complete submittal packages, which include all required drawings, calculations, and product data sheets, shall be submitted for approval. Partial submittal packages may be returned to sender without being reviewed.

A. Shop Submittal Package
1. The Contractor shall prepare a SHOP SUBMITTAL PACKAGE covering the complete system. The SHOP SUBMITTAL PACKAGE shall be submitted to the approval authorities for review and approval. The submittal to the Engineer shall be in an electronic (PDF) format. The SHOP SUBMITTAL PACKAGE shall be approved prior to ordering materials or starting construction. The complete submittal shall conform to all requirements of this section.
2. At the time of completion of the submittal package and prior to transmittal to the approving authorities, the Contractor shall independently perform a quality assurance review of the entire submittal package internally to assure completeness and conformance with all applicable requirements.
3. The SHOP SUBMITTAL PACKAGE shall include the following information:
   a. Complete system shop drawings using AutoCAD (2016 or newer), drawn to scale and showing <u>all</u> system components and functions. Drawings shall also indicate point-to-point wiring to all devices and panels and an elementary wiring schematic (riser diagram) depicting the actual intended circuit paths and all devices on the system. Drawings shall indicate board level wiring diagrams indicating proper connections inside each panel and subpanel. Drawings shall include antenna numbers, coaxial cable routes, and locations of any other system components including splitters, couplers, filters, amplifiers, etc. Overlay approximate coverage radii indicating -95 dBm downlink signal strength around each proposed coverage antenna. Include results of any previous coverage testing per grid if available. The drawings shall indicate all wiring, raceway, and electrical box installation requirements as drawing notes for the installers. The drawing scale shall not be less than 1/8 in. = 1 ft.
      1) Drawings shall indicate wire counts, type and size of wire or cable used, and the size and type of all conduit and their locations throughout. The location of all junction boxes shall be shown.
      2) All drawing submittals shall be submitted on the same size sheets. The drawings shall be sequentially numbered throughout the entire set.
   b. Complete battery backup calculations shall be provided.
   c. Complete equipment data for all materials and equipment proposed for installation.

d. Installation, operation, programming, and maintenance manuals for all panels and equipment.
e. Complete bill of materials, listing all system components by manufacturer, quantity, and part number, shall accompany the equipment submittal.
f. Complete details of manufacturers' warranties on equipment and Contractor's warranties on installation.
g. Complete manual(s) covering installation, operation, testing, and programming of the BDA.

B. Submittals to the Authorities Having Jurisdiction

Submit shop drawings, product data, and calculations directly to the Authorities Having Jurisdiction for approval. Do not commence work until approval is obtained. Provide proof of approval to Owner. Coordinate with the local authorities' field inspecting representatives and make all adjustments or changes required to obtain approval without added cost to the contract.

C. Record Documentation
1. Prepare and maintain on-site throughout the installation of the fire alarm system at least one set of marked-up ("red-lined") drawings which show the system as installed, including deviations from both the project drawings and the approved shop drawings. At least one set of marked-up drawings shall be provided to the Engineer at the time of, or prior to, the final acceptance test and installation review.
2. Prepare and submit record shop drawings and product data, reflecting final as-built conditions at completion of project, but before final acceptance of the work. These documents shall be prepared in accordance with the requirements for the initial submittal. Freehand sketches or mark-up documents are not acceptable. Record drawings shall be submitted on electronic media (CD or DVD) in PDF and AutoCAD formats.
3. Record documentation shall consist of the following:
a. Record wiring and conduit/wire layout diagrams which indicate wire type, color-code, size, and device interconnection. These drawings shall be drawn to scale and not less than 1/8 in. = 1 ft and shall be produced and submitted in AutoCAD (2016 or newer) format.
b. Record riser diagrams that indicate the actual installed arrangement of all antennas, radiating coaxial cables, coaxial cables, and other related devices.
c. Original technical literature produced by the manufacturer on all major parts of the system including the bidirectional amplifier, distributed antenna system, and donor antennas.
d. Complete Bill of Materials for the system listing all system components, manufacturer, quantity, and part number.
e. Complete documentation of the manufacturer's warranties on both equipment and installation.
f. All frequencies required by the fire code official.
g. All record documents and related system documentation shall be submitted to the Engineer for review and approval prior to final submittal to the Owner.

1.8 QUALITY ASSURANCE

A. Qualifications
1. The system designer and the lead installation personnel shall hold the following qualifications as a minimum.
a. A valid FCC-issued general radio operator's license.

b. Certification of in-building system training issued by a nationally recognized organization, school, or a certificate issued by the manufacturer of the equipment being installed.

2. The system designer and installer shall each have a minimum of three (3) years of continuous experience in the design and/or installation of Emergency Responder Communications Enhancement Systems and shall have completed a minimum of 5 projects of similar scope. It is intended that these projects incorporated similar equipment as proposed for this project.
3. Contractor shall have successfully installed Emergency Responder Communications Enhancement Systems of the same type and design as specified herein. The Contractor shall provide evidence of such qualifications. The data shall include the names and locations of at least three installations where the Contractor has installed such systems. The Contractor shall indicate the type and design of each system and certify that each system has performed satisfactorily in the manner intended for a period of not less than 18 months.
4. All materials shall be new and in good condition, free of defects, scratches, corrosion, and contamination. Used equipment shall not be allowed.

B. Equipment and components shall bear the markings indicating the equipment or component is UL-listed, FM-approved, and/or FCC Certificated, as required.

C. Regulatory Requirements

1. The design, equipment, materials, installation, and workmanship shall be in strict accordance with the IFC and all required and advisory provisions of NFPA 70, NFPA 72, and all other applicable NFPA standards, Local, State and Federal codes, and all other requirements specified herein. The advisory provisions (Appendices/ Annexes) of the NFPA publications referred to herein, shall be considered to be mandatory, as though the word "shall" had been substituted for "should" wherever it appears. If there are any conflicts between these specifications and the referenced standards and publications, the most stringent requirement shall apply, as determined by the Engineer.
2. Shop drawings, manufacturers' product data, and battery and voltage drop calculations shall bear the stamp of approval of Authorities Having Jurisdiction, including the Engineer and the Fire Marshal's office.
3. Approval of shop drawings, manufacturers' product data, battery calculations, and other materials submitted by the Contractor shall not relieve the Contractor's responsibility for full compliance with this section unless written approval is requested by the Contractor and obtained from the Engineer for the non-complying feature.
4. Deviations from this section and the Contractor's approved submittal documents will not be permitted without written consent from the Engineer.
5. Compliance with the contract documents shall not relieve the Contractor from any specification section including strict compliance with NFPA 72, local, state, or federal requirements, and the requirements of the Authorities Having Jurisdiction.

D. All work shall be performed in a high quality, professional, highly skilled, and timely manner.

1.9 SEQUENCING

A. All work performed shall be carried out in accordance with the applicable sections under Division 1 – General Requirements and shall adhere to the established completion schedule. Every effort shall be made to coordinate the installation with all other trades.

1.10 WARRANTY AND SERVICE AGREEMENT

A. The prime Contractor shall provide, as a part of the installation cost of the system, a warranty and service agreement to cover the installation of the complete system as well as planned and emergency service for a period of one year following final system acceptance by the Owner and Engineer.

B. The warranty and service agreement shall include the following:
1. Labor, parts, and equipment for components placed under warranty.
2. Labor, parts, and equipment to accomplish any manufacturer recommended upgrades or component replacements.
3. Guarantee that all factory issued notifications related to system equipment/ programming upgrades and replacements will be carried out within 14 days of initial notification by the manufacturer.
4. This testing shall include all BDA, amplifiers, distributed antenna, power supplies, back-up batteries, and radiating coaxial cable.
5. Complete written reports covering the test interval shall be submitted to the Owner/ Tenant within five working days of completion of field testing. These reports shall comply with the requirements of NFPA 72.
6. Written information concerning contacting of the fire alarm equipment distributor for normal and emergency service on a 24-hour period with appropriate phone numbers and contacts' names.
7. The Contractor shall guarantee provision of emergency service coverage for the system by properly trained, experienced, and knowledgeable service technicians 24 hours per day, 7 days per week, including all holidays.
8. Written guarantee of maximum call-back time of 1-hour, 4-hour on-site response time for emergency service related to alarm conditions and 12-hour on-site response time related to trouble and supervisory conditions form the initial call.

1.11 EXTRA MATERIALS

A. Provide six (6) keys for each type of enclosure.

B. Provide six (6) of each type of special tool required for system use and maintenance.

PART 2 - PRODUCTS

2.1 MANUFACTURERS

A. Subject to compliance with requirements, available Integrators offering products that may be incorporated into the Work include, but are not limited to, the following:
1. CommScope/Andrew
2. Corning
3. Times Microwave
4. Tessco
5. CCI (Communication Components Inc.)
6. Solid Technologies

2.2 COMPATIBILITY

A. The equipment, including but not limited to repeaters, transmitters, receivers, signal boosters, cabling, fiber distributed antenna system, etc., shall not interfere with the existing communication systems utilized by the Public Safety and First Responder agencies.

2.3 WIRING, RACEWAYS AND RELATED MATERIALS

A. All wire and cable of the system shall be listed and shall fully conform to the requirements of NFPA 70 as well as the requirements of the panel and device manufacturers.

B. All conduit, junction boxes, device boxes, terminal cabinets and related hardware and equipment shall be listed and shall fully conform to the requirements of the NFPA 70. All conduit shall be selected such that the maximum fill capacities indicated in the NFPA 70 are not exceeded. All device boxes and junction boxes shall similarly be selected such that the fill capacities of these components are within the limits indicated in the NFPA 70. Device mounting boxes must be selected based on proper consideration of the space taken up by the device within the box.

PART 3 - EXECUTION

3.1 GENERAL

A. Coordinate work of this Section with other affected work.

B. The Contractor shall take any necessary measures to prevent damage to the facilities and equipment and shall take any necessary measures to keep the premises clean at all times. Damage resulting from the work and testing under this section, whether intentional or not, shall be repaired by the Contractor at no cost to the Owner.

C. Neither the Engineer nor Owner shall be responsible for providing a safe working place for the Contractor, subcontractors, or their employees, or any individual responsible to them for the work. This responsibility rests with the Contractor.

D. All equipment shall be installed in an aesthetic and skilled manner in accordance with NFPA Codes and Standards and other applicable standards referenced by this document. Final appearance of all systems and equipment shall be neat and clean.

E. The Contractor shall install the system devices and equipment in accordance with approved shop drawings.

F. The Contractor is responsible for coordination of system requirements with all conditions of the building and site including, but not limited to, blind spaces, shelving, lights, grilles and diffusers, piping, duct work, doors, windows, equipment platforms, walls (fire-rated and non-fire-rated), beams, joists, columns, HVAC equipment, electrical panels and equipment, ceilings, areas without ceilings, wall construction, floors and all construction, equipment and building appurtenances.

G. Equipment, devices, apparatus, and accessories requiring normal servicing, operation and maintenance shall be made easily accessible.

3.2 WIRING, RACEWAYS AND ELECTRICAL BOXES

A. All AC power or AC control wiring shall be run in electrical metallic tubing (“EMT”) conduit in full compliance with NFPA 70. In no case shall AC power wiring be run in the same conduit as any other circuits. A minimum separation distance of ½ inch between AC power and all other circuits shall be maintained within panels. The exception to this would be at terminal blocks within panels or at the interface with devices. At these locations, maximum possible separation shall be achieved.

B. All wiring and cables shall meet the pathway survivability requirements of NFPA 72.

C. The selection of cable types and wire with respect to conductor size, shielding requirements and separation between circuits shall be in full compliance with the requirements of the manufacturer of the connected equipment without exception.

D. Permanent machine lettered wire markers with numbers/ letters shall be used to identify the terminations of all conductors within the panels and equipment. Permanent wire markers shall also be used at all devices which have numbered terminals. Provide a schedule of numbers on the appropriate drawings.

E. All wires shall be checked for grounds, shorts, opens, and correct resistance, capacitance and other applicable parameters prior to termination of the circuits within panel or subpanels and prior to the installation of devices.

F. Where wiring and conduit penetrate fire-rated barriers, appropriate fire stopping shall be put in place. Installation of materials shall result in fire resistance rating equal to or greater than the rating of the penetrated assembly, unless otherwise indicated.

G. Wherever wiring and cabling pass through building walls, floors and roofs or is exterior to the building, it shall be enclosed in EMT or flexible conduit. Penetrations through exterior walls or roofs shall be sealed weather tight.

H. All junction boxes shall be painted red externally or provided with red covers. Junction box covers shall also be painted red on both sides. The Contractor shall protect building structural elements and interior finishes from being painted. All junction boxes for which the circuit use is not readily discernible shall be permanently labeled. All junction boxes which contain devices shall be labeled. All labels shall consist of engraved phenolic signs which have been approved by the Engineer prior to installation. The use of handwriting to perform this identification is not acceptable.

I. To prevent insulation damage or device damage, the following requirements apply:
   1. Any threaded EMT or flexible conduit terminating at metal boxes or cabinets shall be provided with insulating bushings at throat of connector.
   2. Any EMT connectors must be the all steel compressing type with insulated throats. The exception to this is indenture type which may be used on exposed unfinished areas to obtain a tighter fit to the surface.
   3. Provide a clamp or other approved restraining device where cables or wires which are not in conduit enter junction boxes.

J. All panel enclosures installed in gypsum wallboard walls shall be recess mounted, and interconnecting circuits and shall be concealed within the wall cavity or in the space above the suspended ceiling or other space to the maximum extent possible. All circuits shall be routed and secured in full compliance with NFPA 70.

3.3 FIELD QUALITY CONTROL AND TESTING

A. The Contractor shall provide a qualified project superintendent for the overall management and supervision of the work.

B. The project superintendent shall assure that adequate supervision is provided during all periods of installation of the fire alarm system. The project superintendent and all job site supervisors shall have a minimum of five years of continuous experience in the installation of fire alarm systems of similar scope and complexity.

C. The system shall be subject to inspection and acceptance by the AHJ(s) and for the purpose of determining that the system is in accordance with federal, state, local, and

specification requirements, and applicable NFPA Code and Standards and other related codes.

D. Prior to the system acceptance testing, the Contractor shall provide, in writing, certification that the installed system is in full compliance with the design documents and all applicable codes and standards. See Appendix “A” for a sample letter.

E. The Contractor shall be responsible for performing, documenting, and certifying requisite inspection and tests in accordance with applicable codes and standards for all equipment furnished under this specification. After completing his testing, the Contractor shall demonstrate full operational capability of the system, as well as full compliance with all design documents, codes and standards, to the AHJ.

F. The Contractor shall perform supplemental tests and shall render additional services in connection with the Emergency Responder Communications Enhancement System, as directed, at no additional cost to the Owner. The effect of additional tests, if any, on the delivery schedule shall be determined prior to undertaking the test.

G. In the event the acceptance test of the system results in the need for system repair or modification, the Contractor shall demonstrate the operability of the system to the full satisfaction of the Owner and Engineer following the completion of repairs or modification.

H. The Contractor shall conduct an independent quality assurance review of all developed AutoCAD Version (2016 or newer) "record" drawings to assure accuracy and completeness of these drawings. These drawings, as well as the O&M manuals and all other system documentation, shall be turned over to the Owner/Tenant prior to the start of the final acceptance tests.

3.4 MAINTENANCE AND ANNUAL TESTING

A. Annual tests will be conducted by the local Fire Department unit or authorized company.

B. Maintenance Contract

1. Maintenance contract with a Radio Service Provider in place with name of authorized company, who will provide a 24-hour, 7-day emergency response within two (2) hours after notification. The system shall be maintained in accordance with FCC requirements.
2. All tests shall be conducted, documented, and signed by a person in possession of a current FCC General Radio telephone Operator License, or a technician certification issued by the Association of Public-Safety Communications Officials International (APCO) or equivalent as determined by the local Fire Department.
3. Maintain a list of contact personnel with phone numbers at the radio repeater system cabinet. The contact personnel shall have knowledge of the building and the repeater system and be available to respond to the building in the case of an emergency.
4. Radio Service Provider maintenance contract shall include but not limited to:
   a. Annual Test
      1) All active components of the distributed antenna system, including but not limited to amplifier, power supplies, and back-up batteries, shall be tested a minimum of once every 12 months.
      2) Amplifiers shall be tested to ensure that the gain is the same as it was upon initial installation and acceptance. The original gain shall be noted and any change in gain shall be documented.
      3) Back-up batteries and power supplies shall be tested under load for a period of one (1) hour to verify that they will operate during an actual power outage.

4) Active components shall be checked to determine that they are operating within the manufacturer's specifications for their intended purpose.
5) Documentation of the test shall be maintained on site and a copy forwarded to the local Fire Department Radio Supervisor upon completion of the test.

Appendix A Letter of

Certification

LETTER OF CERTIFICATION

Building 1
The Industrial Park

To Whom It May Concern:

I certify that XYZ Company has installed, inspected, and tested the fire alarm system in full compliance with all design documents and all applicable codes and standards.

Sincerely,

Max Worker
Manager, Testing and Inspections

Appendix B Bid

Form

Section 26 8115

Emergency Responder Communications Enhancement System Bid Form – Must be filled out completely.

ITEM	PART #	EA	QTY	TOTAL
Antenna System				
Fiber (12 strand)				
Coaxial Cable				
Connector				
Coupler				
Splitter				
Inside Antenna *(please list)*				
Donor Antenna *(please list)*				
Donor Antenna Mount				
Miscellaneous Materials				
Equipment				
BDA (please list)				
Alarm Monitor Panel				
Back-Up Power (24 hour)				
NEMA 4/4X Enclosure				
Miscellaneous Materials				
Filters & Combiners				
Filters *(please list)*				
Combiner Network (please list)				
Services				
System Design				
Documentation				
Antenna System Install				
Equipment Install				
Commissioning Tests				
Acceptance				
Other				
Project Total				

~END OF SECTION~

DIVISION 27

SECTION 27 1000
STRUCTURED CABLING

PART 1 - GENERAL

1.01 SECTION INCLUDES

A. Communication Cabling System Installation requirements.

B. Horizontal and Backbone Cabling Systems.

C. Communications pathways.

D. Cable Trays

E. Copper cable and terminations.

F. Fiber optic cable, terminations, and interconnecting devices.

G. Communications equipment room fittings.

H. Communications outlets.

I. Communications grounding and bonding.

J. Communications identification.

K. Cabling testing procedures.

1.02 RELATED REQUIREMENTS

A. Drawings and general provisions of the Contract, including General and Supplementary Conditions and Division 01 Specification Sections, apply to this Section.

B. Division 07 - Firestopping.

C. Division 26 - Grounding and Bonding for Electrical Systems.
   1. Includes intersystem bonding termination.
   2. Includes bonding jumpers for bonding of communications systems and electrical system grounding.

D. Division 26 - Conduit for Electrical Systems.

E. Division 26 - Cable Trays for Electrical Systems.

F. Division 26 - Boxes for Electrical Systems.

G. Division 26 - Underfloor Raceways for Electrical Systems.

H. Division 26 - Identification for Electrical Systems: Identification products.

I. Division 26 - Wiring Devices.

1.03 DEFINITIONS

A. BICSI: Building Industry Consulting Services International

B. EIA: Electronic Industries Association

C. TIA: Telecommunications Industries Association

D. UL: Underwriters Laboratory

E. NFPA: National Fire Protection Association

1.04 REFERENCE STANDARDS

A. ANSI/TIA-1152-A - Requirements for Field Test Instruments and Measurements for Balanced Twisted-Pair Cabling.

B. ANSI/TIA-568-0.D - Generic Telecommunications Cabling for Customer Premises.

C. BICSI N1 - Installation Practices for Telecommunications and ICT Cabling and Related Cabling Infrastructure, 1st Edition 2019.

D. EIA/ECA-310 - Cabinets, Racks, Panels, and Associated Equipment Revision E, 2005.

E. FM (AG) - FM Approval Guide current edition.

F. ICEA S-83-596 - Indoor Optical Fiber Cables 2016.

G. ICEA S-90-661 - Category 3, 5, & 5e Individually Unshielded Twisted Pair Indoor Cables (With or Without An Overall Shield) For Use in General Purpose and LAN Communications Wiring Systems Technical Requirements 2012.

H. NFPA 70 - National Electrical Code Most Recent Edition Adopted by Authority Having Jurisdiction, Including All Applicable Amendments and Supplements.

I. TIA-455-21 - FOTP-21 - Mating Durability of Fiber Optic Interconnecting Devices 1988a (Reaffirmed 2012).

J. TIA-492AAAA - Detail Specification for 62.5-um Core Diameter/125-um Cladding Diameter Class Ia Graded-Index Multimode Optical Fibers 2009b.

K. TIA-492AAAB - Detail Specification for 50-um Core Diameter/125-um Cladding Diameter Class Ia Graded-Index Multimode Optical Fibers 2009a.

L. TIA-492AAAC - Detail Specification for 850-nm Laser-Optimized, 50-um Core Diameter/125-um Cladding Diameter Class Ia Graded-Index Multimode Optical Fibers 2009b.

M. TIA-492AAAD - Detail Specification for 850-nm Laser-Optimized, 50-um Core Diameter/125-um Cladding Diameter Class Ia Graded-Index Multimode Optical Fibers 2009.

N. TIA-492CAAA - Detail Specification for Class IVa Dispersion-Unshifted Singlemode Optical Fibers 1998 (Reaffirmed 2002).

O. TIA-492CAAB - Detail Specification for Class IVa Dispersion-Unshifted Singlemode Optical Fibers with Low Water Peak 2000 (Reaffirmed 2005).

P. TIA-526-7 - Measurement of Optical Power Loss of Installed Singlemode Fiber Cable Plant 2015a.

Q. TIA-526-14 - Optical Power Loss Measurement of Installed Multimode Fiber Cable Plant 2015c.

R. TIA-568 (SET) - Commercial Building Telecommunications Cabling Standard Set 2019.

S. TIA-568.2 - Balanced Twisted-Pair Telecommunications Cabling and Components Standard 2018d.

T. TIA-568.3 - Optical Fiber Cabling and Components Standard 2016d.

U. TIA-569 - Telecommunications Pathways and Spaces 2019e.

V. TIA-570 - Residential Telecommunications Infrastructure Standard 2018d.

W. TIA-598 - Optical Fiber Cable Color Coding 2014d.

X. TIA-606 - Administration Standard for Telecommunications Infrastructure 2017c.

Y. TIA-607 - Generic Telecommunications Bonding and Grounding (Earthing) for Customer Premises 2019d.

Z. UL (DIR) - Online Certifications Directory Current Edition.

AA. UL 444 - Communications Cables Current Edition, Including All Revisions, and Edition 5, 2017.

BB. UL 514C - Nonmetallic Outlet Boxes, Flush-Device Boxes, and Covers Current Edition, Including All Revisions.

CC. UL 1651 - Fiber Optic Cable Current Edition, Including All Revisions.

DD. UL 1863 - Communications-Circuit Accessories Current Edition, Including All Revisions.

1.05 ADMINISTRATIVE REQUIREMENTS

A. Coordination:

1. Coordinate requirements for service entrance and entrance facilities with Communications Service Provider.

2. Coordinate the work with other trades to avoid placement of other utilities or obstructions within the spaces dedicated for communications equipment.
3. Coordinate arrangement of communications equipment with the dimensions and clearance requirements of the actual equipment to be installed.
4. Notify Architect of any conflicts with or deviations from Contract Documents. Obtain direction before proceeding with work.

B. Arrange for Communications Service Provider to provide service.

C. Preinstallation Meeting: Convene prior to commencing work of this section, as requested of the GC or Owner, to review service requirements and details with Communications Service Provider representative.

1.06 SUBMITTALS

A. See Section 013000 - Administrative Requirements, for submittal procedures.

B. Product Data: Provide manufacturer's standard catalog pages and data sheets for each product.

C. Evidence of qualifications from Manufacturer for installer to install and warranty submitted products.

D. Shop Drawings: Show compliance with requirements on isometric schematic diagram of network layout, showing cable routings, telecommunication closets, rack and enclosure layouts and locations, service entrance, and grounding, prepared and approved by BICSI Registered Communications Distribution Designer (RCDD).

E. Manufacturer's Installation Instructions: Indicate application conditions and limitations of use stipulated by product testing agency. Include instructions for storage, handling, protection, examination, preparation, installation, and operation of product.

F. Test Plan: Complete and detailed plan, with list of test equipment, procedures for inspection and testing, and intended test date; submit at least 60 days prior to intended test date.

G. Copper and Fiber Test reports. Document data for each measurement. Data for submittals shall be printed in a summary report that is formatted similar to Table 10.1 in BICSI TDMM, or transferred from the instrument to the computer, saved as text files, and printed and submitted.

H. Upon completion of testing and any corrections required, the installation contractor shall register all copper and fiber test results with the manufacturer(s) to attain the manufacturer’s extended warranty on labor an material. The manufacturer's approved documentation shall be delivered to the Owner.
   1. Evidence from Manufacturer offering extended warranty on Labor and Material confirming all submitted manufacturers are included with this warranty.

I. Cable Tray submittals shall include Delegated-Design Submittal: For seismic restraints.
   1. Seismic-Restraint Details: Signed and sealed by a qualified professional engineer, licensed in the state where Project is located, who is responsible for their preparation.
   2. Design Calculations: Calculate requirements for selecting seismic restraints.
   3. Detail fabrication, including anchorages and attachments to structure and to supported cable trays.

J. Field Test Reports.

K. Project Record Documents: Prepared and approved by BICSI Registered Communications Distribution Designer (RCDD).
   1. Record actual locations of outlet boxes and Data Rooms.
   2. Show as-installed color coding, pair assignment, polarization, and cross-connect layout.
   3. Identify Data Rooms and equipment rooms by room number on drawings.

L. Operation and Maintenance Data: List of all components with part numbers, sources of supply, and operation and maintenance instructions; include copy of project record documents

1.07 QUALITY ASSURANCE

A. Maintain at the project site a copy of each referenced document that prescribes execution requirements.

B. Manufacturer Qualifications: At least 3 years' experience manufacturing products of the type specified. experience in the installation and testing of the type of system specified, and:

C. Installer Qualifications: A company having at least 3 years' experience in the installation and testing of the type of system specified, and:
   1. Employing a BICSI Registered Communications Distribution Designer (RCDD).
   2. Supervisors and installers factory certified by manufacturers of products to be installed.
   3. Employing BICSI Registered Cabling Installation Technicians (RCIT) for supervision of all work.

D. Products: Listed, classified, and labeled as suitable for the purpose intended.

E. Product Listing Organization Qualifications: An organization recognized by OSHA as a Nationally Recognized Testing Laboratory (NRTL) and acceptable to authorities having jurisdiction.

F. Telecommunications Pathways and Spaces: Comply with TIA/EIA-569-A.

G. Grounding: Comply with ANSI-J-STD-607-A.

1.08 DELIVERY, STORAGE, AND HANDLING

A. Store products in manufacturer's unopened packaging until ready for installation.

B. Keep stored products clean, dry and in a temperature permitted by the manufacturer.

C. Test cables upon receipt at Project site.
   1. Test optical fiber cable to determine the continuity of the strand end to end. Use optical loss test set.
   2. Test optical fiber cable while on reels. Use an optical time domain reflectometer to verify the cable length and locate cable defects, splices, and connector, including the loss value of each. Retain test data and include the record in maintenance data.
   3. Test each pair of UTP cable for open and short circuits.

1.09 WARRANTY

A. See Section 017800 - Closeout Submittals, for additional warranty requirements.

B. Correct defective Work within a 2 year period after Date of Substantial Completion.

PART 2 PRODUCTS

2.01 SYSTEM DESIGN

A. Provide a complete permanent system of cabling and pathways for voice, data, audio visual, and security communications, including cables, conduits and wireways, pull wires, support structures, enclosures and cabinets, and outlets.
   1. Comply with TIA-568 (SET) (cabling) and TIA-569 (pathways) (commercial standards).
   2. Comply with Communications Service Provider requirements.
   3. Provide fixed cables and pathways that comply with NFPA 70 and TIA-607 and are UL listed or third party independent testing laboratory certified.
   4. Provide connection devices that are rated for operation under conditions of 32 to 140 degrees F (0 to 60 degrees C) at relative humidity of 0 to 95 percent, noncondensing.
   5. In this project, the term plenum is defined as return air spaces above ceilings, inside ducts, under raised floors, and other air-handling spaces.

B. System Description:
   1. Building Entrance / Service Provider Cable: By others.
   2. Horizontal - Provide Category 6A plenum voice and data cabling, termination devices, and outlets per drawings.

3. Provide Ethernet cabling and outlets as indicated on T-drawings.
4. Backbone Cabling Between exterior Security enclosure and new Building:
   a. Category 6A, indoor/outdoor, plenum rated cable to extend the existing cameras.

C. Equipment Room (ER)/ Main Distribution Frame (MDF): Centrally located support structure for terminating horizontal cables that extend to telecommunications outlets, functioning as point of presence to external service provider.

D. Telecommunication Rooms (TRs)/ Intermediate Distribution Frame (IDF): Support structures for terminating horizontal cables that extend to telecommunications outlets.

E. Backbone Cabling: Cabling, pathways, and terminal hardware connecting Telecommunication Rooms (TRs/IDFs) with Equipment Room (ER/MDF), wired in star topology with Equipment Room (ER) at center hub of star.

F. Cabling to Outlets: Specified horizontal cabling, wired in star topology to Equipment Room or Telecommunication Room located at center hub of star; also referred to as "links".

2.02 PATHWAYS

A. General Requirements: Comply with TIA/EIA-569-C.

B. Cable Support: NRTL labeled for support of Category 5E and above cabling, designed to prevent degradation of cable performance and pinch points that could damage cable.
   1. Support brackets with cable tie slots for fastening cable ties to brackets.
   2. Lacing bars, spools, J-hooks, and D-rings.
   3. Straps and other devices.

C. Conduit: As specified in Division 260533.13; provide pull cords in all conduits.

D. Cable Trays: As specified in Division 260536.

E. Underfloor Ducts: As specified in Division 260539.

F. Overhead Service Entrance: Weatherhead or service entrance fitting located on outside of building with galvanized rigid steel or intermediate metallic conduit running to entrance facility.

G. Underground Service Entrance: Rigid polyvinyl chloride (PVC) conduit, Schedule 40.

H. Firestop Sleeves: Listed; provide as required to preserve fire resistance rating of building elements.
   1. Products:
      a. Hilti Fire Stopping Products; www.hilti.com
      b. STI Fire Stopping Products; www.stifirestop.com
      c. HoldRite, a brand of Reliance Worldwide Corporation; HydroFlame Pro Series/HydroFlame Custom Built: www.holdrite.com/#sle.
      d. Approved Equivalents
      e. Substitutions: See Section 016000 - Product Requirements.

2.03 CABLE TRAYS

A. Include Ladder Cable Trays, Wire-Basket Cable Trays, and Single Rail Cable Trays.

B. GENERAL REQUIREMENTS FOR CABLE TRAYS
   1. Cable Trays and Accessories: Identified as defined in NFPA 70 and marked for intended location, application, and grounding.
      a. Source Limitations: Obtain cable trays and components from single manufacturer.
   2. Sizes and Configurations: See the Cable Tray details on Drawings for specific requirements for types, materials, sizes, and configurations.
   3. Structural Performance: See articles for individual cable tray types for specific values for the following parameters:
      a. Uniform Load Distribution: Capable of supporting a uniformly distributed load on the indicated support span when supported as a simple span and tested according to NEMA VE 1.
      b. Concentrated Load: A load applied at midpoint of span and centerline of tray.

c. Load and Safety Factors: Applicable to both side rails and rung capacities.

C. LADDER CABLE TRAYS
1. Manufacturers: Subject to compliance with requirements, provide products by one of the following:
2. Basis-of-Design Product: Subject to compliance with requirements, as indicated on the T-drawings or comparable product by one of the following:
   a. Cooper B-Line, Inc.
   b. Chatsworth
   c. Wiremaid Products Division; Vutec Corporation.
3. Description:
   a. Configuration: Two I-beam side rails with transverse rungs welded to side rails.
   b. Rung Spacing: 12 inches o.c.
   c. Radius-Fitting Rung Spacing: 9 inches at center of tray's width.
   d. Minimum Cable-Bearing Surface for Rungs: 7/8-inch width with radius edges.
   e. No portion of the rungs shall protrude below the bottom plane of side rails.
   f. Structural Performance of Each Rung: Capable of supporting a maximum cable load, with a safety factor of 1.5, plus a 200-lb concentrated load, when tested according to NEMA VE 1.
   g. Minimum Usable Load Depth: 6 inches.
   h. Straight Section Lengths: 10 feet except where shorter lengths are required to facilitate tray assembly.
   i. Width: 12 inches unless otherwise indicated on Drawings.
   j. Fitting Minimum Radius: 12 inches.
   k. Class Designation: Comply with NEMA VE 1.
   l. Splicing Assemblies: Bolted type using serrated flange locknuts.
   m. Hardware and Fasteners: Steel, zinc plated according to ASTM B 633.
   n. Splice Plate Capacity: Splices located within support span shall not diminish rated loading capacity of cable tray.

D. WIRE-BASKET CABLE TRAYS
1. Manufacturers: Subject to compliance with requirements, provide products by one of the following:
2. Basis-of-Design Product: Subject to compliance with requirements, as indicated on the T-drawings or comparable product by one of the following:
   a. Cooper B-Line, Inc.
   b. Chatsworth
   c. Snaketray.
   d. Wiremaid Products Division; Vutec Corporation.
3. Description:
   a. Configuration: Wires are formed into a standard 2-by-4-inch wire mesh pattern with intersecting wires welded together. Mesh sections must have at least one bottom longitudinal wire along entire length of section.
   b. Materials: High-strength-steel longitudinal wires with no bends.
   c. Safety Provisions: Wire ends along wire-basket sides (flanges) rounded during manufacturing to maintain integrity of cables and installer safety.
   d. Sizes:
      1) Straight sections shall be furnished in standard 118-inch lengths.
      2) Wire-Basket Depth: 12 inches wide.
      3) Wire-Basket Depth: 4 wide or as required.
   e. Connector Assemblies: Bolt welded to plate shaped to fit around adjoining tray wires and mating plate. Mechanically joins adjacent tray wires to splice sections together or to create horizontal fittings.
   f. Connector Assembly Capacity: Splices located within support span shall not diminish rated loading capacity of cable tray.

4. Hardware and Fasteners: Steel, zinc plated according to ASTM B 633.

E. SINGLE-RAIL CABLE TRAYS
1. Manufacturers: Subject to compliance with requirements, provide products by one of the following
2. Basis-of-Design Product: Subject to compliance with requirements, as indicated on the T-drawings or comparable product by one of the following:
   a. Cooper B-Line, Inc.
   b. Chatsworth
   c. Wiremaid Products Division; Vutec Corporation.
3. Description:
   a. Configuration: Center rail with extruded-aluminum rungs arranged symmetrically about the center rail.
   b. Construction: Aluminum rungs mechanically connected to aluminum center rail in at least two places, with ends finished to protect installers and cables.
   c. Rung Spacing: 12 inches o.c.
   d. Radius-Fitting Rung Spacing: 9 inches at center of tray's width.
   e. Straight Section Lengths: 10 feet except where shorter lengths are required to facilitate tray assembly.
   f. Width: 12 inches unless otherwise indicated on Drawings.
   g. Support Point: Splice fittings shall be hanger support point.
   h. Support Spacing: Support each section at midpoint. Support wall-mounted sections a maximum of one-sixth of the section length from each end.
   i. Loading Depth: 4 inches
   j. Maximum Loads: 50 lb/ft.
   k. Unbalanced Loads: Maintain cable tray rungs within six degrees of horizontal under all loading conditions.
   l. Splicing Assemblies: Bolted type using serrated flange locknuts.
   m. Splicing Assembly Capacity: Splices located within support span shall not diminish rated loading capacity of cable tray.
   n. Hardware and Fasteners: Steel, zinc plated according to ASTM B 633.
   o. Splices and Connectors: Protect cables from edges of center rail and do not intrude into cable fill area.

F. MATERIALS AND FINISHES
1. Steel:
   a. Straight Section and Fitting Side Rails and Rungs: Steel complies with the minimum mechanical properties of ASTM A 1008/A 1008M, Grade 33, Type 2.
   b. Steel Tray Splice Plates: ASTM A 1011/A 1011M, HSLAS, Grade 50, Class 1.
   c. Fasteners: Steel complies with the minimum mechanical properties of ASTM A 510/A 510M, Grade 1008.
   d. Finish: Electrogalvanized before fabrication.
      1) Standard: Comply with ASTM B 633.
      2) Hardware: Galvanized, ASTM B 633.
   e. Finish: [poxy-resin or Powder-coat enamel paint.
      1) Powder-Coat Enamel: Cable tray manufacturer's recommended primer and corrosion-inhibiting treatment, with factory-applied powder-coat paint.
      2) Epoxy-Resin Prime Coat: Cold-curing epoxy primer, MPI# 101.
      3) Epoxy-Resin Topcoat: Epoxy, cold-cured, gloss, MPI# 77.
      4) Hardware: Chromium-zinc plated, ASTM F 1136.
   f. Finish: Black oxide finish for support accessories and miscellaneous hardware according to ASTM D 769.
2. Aluminum:

a. Materials: Alloy 6063-T6 according to ANSI H 35.1/H 35.1M for extruded components and Alloy 5052-H32] or Alloy 6061-T6 according to ANSI H 35.1/H 35.1M for fabricated parts.
b. Hardware: Chromium-zinc-plated steel, ASTM F 1136.
c. Hardware for Aluminum Cable Tray Used Outdoors: Stainless steel, Type 316, ASTM F 593 and ASTM F 594.

3. Stainless Steel:
a. Materials: Low-carbon, passivated, stainless steel, Type 304L or Type 316L, ASTM F 593 and ASTM F 594.
b. Hardware for Stainless-Steel Cable Tray Used Outdoors: Stainless steel, Type 316, ASTM F 593 and ASTM F 594.

G. CABLE TRAY ACCESSORIES
1. Fittings: Tees, crosses, risers, elbows, and other fittings as indicated, of same materials and finishes as cable tray.
2. Covers: Ventilated-hat type made of same materials and with same finishes as cable tray.
3. Barrier Strips: Same materials and finishes as for cable tray.
4. Cable tray supports and connectors, including bonding jumpers, as recommended by cable tray manufacturer.

H. WARNING SIGNS
1. Lettering: 1-1/2-inch high, black letters on yellow background with legend "Warning! Not To Be Used as Walkway, Ladder, or Support for Ladders or Personnel."
2. Comply with requirements for fasteners in Section 260553 "Identification for Electrical Systems."

I. SOURCE QUALITY CONTROL
1. Testing: Test and inspect cable trays according to NEMA FG 1.

2.04 FIRESTOPPING

A. Comply with requirements in Division 07 Section "Penetration Firestopping."

B. Comply with TIA/EIA-569-C.

C. Comply with BICSI TDMM, "Firestopping System" Article.

2.05 COPPER CABLE AND TERMINATIONS

A. Manufacturers:
1. Berk-Tek
2. Superior Essex
3. Belden
4. Leviton
5. Hubbell Premise Wiring
6. Panduit
7. Siemon
8. [_____]
9. Substitutions: See Section 016000 - Product Requirements.

B. Copper Horizontal Cable:
1. Description: 100 ohm, balanced twisted pair cable complying with TIA-568.2 and listed and labeled as complying with UL 444.
2. Cable Type: Voice and Data: TIA-568.2 Category 6A UTP, 23 AWG.
3. Cable Type - Voice: TIA-568.2 Category 5e UTP (unshielded twisted pair); 24 AWG.
4. Cable Capacity: 4-pair.

C. Cable Applications: Use listed NFPA 70 Type CMP plenum cable unless otherwise indicated.
1. Cable Applications:
a. Plenum Applications: Use listed NFPA 70 Type CMP plenum cable.
b. Cable Jacket Color - Voice and Data Cable: Blue.

D. Copper Cable Terminations: Insulation displacement connection (IDC) type using appropriate tool; use screw connections only where specifically indicated.

E. Jacks and Connectors: Modular 8P8C (RJ-45), non-keyed, terminated with 110-style insulation displacement connectors (IDC); high impact thermoplastic housing; suitable for and complying with same standard as specified horizontal cable; UL 1863 listed.
   1. Performance: 500 mating cycles.
   2. Voice and Data Jacks: 8-position modular jack, color-coded for both T568A and T568B wiring configurations.

F. Copper Patch Cords:
   1. Description: Factory-fabricated 4-pair cable assemblies with 8-position modular connectors terminated at each end.

2.06 COMMUNICATIONS EQUIPMENT ROOM FITTINGS

A. Copper Cross-Connection Equipment:
   1. Manufacturers:
      a. Belden
      b. Leviton
      c. Hubbell Premise Wiring
      d. Panduit
      e. Siemon
      f. Substitutions: See Section 016000 - Product Requirements.
   2. Patch Panels for Copper Cabling: Sized to fit EIA/ECA-310 standard 19 inch (482.6 mm) wide equipment racks; 0.09 inch (2.2 mm) thick aluminum; cabling terminated on Type 110 insulation displacement connectors; printed circuit board interface.
      a. Jacks: Non-keyed 8P8C (RJ-45), suitable for and complying with same standard as cable to be terminated; maximum 48 ports per standard width panel.
      b. Capacity: Provide ports sufficient for cables to be terminated plus 25 percent spare.
      c. Labels: Factory installed laminated plastic nameplates above each port, numbered consecutively; comply with TIA-606.
      d. Provide incoming cable strain relief and routing guides on back of panel.

B. Backboards: Interior grade plywood without voids, 3/4 inch (19 mm) thick; UL-labeled fire-retardant.
   1. Size: As indicated on drawings.
   2. Do not paint over UL label.

C. Equipment Frames, Racks and Cabinets:
   1. Manufacturers:
      a. Chatsworth
      b. Great Lakes
      c. Hubbell Premise Wiring
      d. Panduit
      e. Siemon
      f. Substitutions: See Section 016000 - Product Requirements.
   2. Component Racks: EIA/ECA-310 standard 19 inch (482.6 mm) wide.
   3. Wall Mounted Racks: Steel construction, hinged to allow access to back of installed components.
      a. Load Rating: 300 pounds.
   4. Floor Mounted Racks: Aluminum or steel construction with corrosion resistant finish; vertical and horizontal cable management channels, top and bottom cable troughs, and grounding lug.
      a. Load rating: pounds (kg).
   5. Freestanding Cabinets: Front and rear doors with locks; removable side panels with locks; vented top and rear door; adjustable leveling feet; cable access in roof and base; grounding bar.

a. Load rating: 1,500 pounds.
b. Roof mounted fan, capacity: 4.

6. Wall Mounted Cabinets: Front doors with locks, louvered side panels, top and bottom cable access, and ground lug.
   a. Cover inside of cabinet back with plywood backboard as specified.
   b. Load rating: 300 pounds.
   c. Roof mounted fan, capacity: 2.
   d. Duplex AC power outlet inside cabinet.
7. Cabinets: Steel construction with corrosion resistant finish.
8. Locks: Keyed alike.

D. Cable Management:
1. Manufacturers:
   a. Chatsworth
   b. Great Lakes
   c. Hubbell Premise Wiring
   d. Panduit
   e. Siemon
   f. Substitutions: See Section 016000 - Product Requirements.

2.07 COMMUNICATIONS OUTLETS

A. Manufacturers:
1. Belden
2. Leviton
3. Hubbell Premise Wiring
4. Panduit
5. Siemon
6. Substitutions: See Section 016000 - Product Requirements.

B. Outlet Boxes: Comply with Section 26 0533.16.
1. Provide depth as required to accommodate cable manufacturer's recommended minimum conductor bend radius.
2. Minimum Size, Unless Otherwise Indicated:
   a. Wall Phone Only Outlets: 4 inch by 2 inch by 2-1/8 inch deep (100 by 50 by 54 mm) trade size.
   b. Data or Combination Voice/Data Outlets: 4 inch square by 2-1/8 inch deep (100 by 54 mm) trade size.
   c. Fiber Optic Outlets: 4-11/16 inch square by 2-1/8 inch deep (119 by 54 mm) trade size.

C. Wall Plates:
1. Comply with system design standards and UL 514C.
2. Accepts modular jacks/inserts.

D. Wall Plate Material/Finish - Flush-Mounted Outlets: High impact thermoplastic, color to be selected.

E. GROUNDING AND BONDING COMPONENTS
1. Comply with TIA-607.
2. Comply with Section 260526.

F. IDENTIFICATION PRODUCTS
1. Comply with TIA-606.
2. Comply with Section 260553.

G. SOURCE QUALITY CONTROL
1. See Section 014000 - Quality Requirements, for additional requirements.
2. Factory test cables according to TIA-568 (SET).

PART 3 EXECUTION

3.01 INSTALLATION - GENERAL

A. Comply with latest editions and addenda of TIA-568 (SET) (cabling), TIA-569 (pathways), TIA-607 (grounding and bonding), BICSI N1, NFPA 70, and SYSTEM DESIGN as specified in PART 2.

B. Coordinate backbone cabling with required protectors and demarcation point provided by the communications service provider.

C. Comply with Communication Service Provider requirements.

D. Grounding and Bonding: Perform in accordance with TIA-607 and NFPA 70.

E. Install firestopping to preserve fire resistance rating of partitions and other elements, using materials and methods specified in Section 07 8400.

3.02 INSTALLATION OF PATHWAYS

A. Install pathways with the following minimum clearances:
   1. 48 inches (1220 mm) from motors, generators, frequency converters, transformers, x-ray equipment, and uninterruptible power systems.
   2. 12 inches (300 mm) from power conduits and cables and panelboards.
   3. 5 inches (125 mm) from fluorescent and high frequency lighting fixtures.
   4. 6 inches (150mm) from flues, hot water pipes, and steam pipes.

B. Conduit, in Addition to Requirements of Section 26 0533.13:
   1. Arrange conduit to provide no more than the equivalent of two 90 degree bend(s) between pull points.
   2. Conduit Bends: Inside radius not less than 10 times conduit internal diameter.
   3. Arrange conduit to provide no more than 100 feet (30 m) between pull points.
   4. Do not use conduit bodies.
   5. Minimum Cover - Underground Service Entrance: Comply with NFPA 70 and Communications Service Provider requirements.

C. Pathway Installation in Communications Equipment Rooms:
   1. Position conduit ends adjacent to a corner on backboard where a single piece of plywood is installed, or in the corner of room where multiple sheets of plywood are installed around perimeter walls of room.
   2. Install cable trays to route cables if conduits cannot be located in these positions.
   3. Secure conduits to backboard when entering room from overhead.
   4. Extend conduits 3 inches above finished floor.
   5. Install metal conduits with grounding bushings and connect with grounding conductor to grounding system.

D. Outlet Boxes:
   1. Coordinate locations of outlet boxes provided under Section 26 0533.16 as required for installation of telecommunications outlets provided under this section.
      a. Mounting Heights: Unless otherwise indicated, as follows:
         1) Voice and Data Outlets: 18 inches (450 mm) above finished floor.
         2) Wall mounted Telephone Outlets: 48 inches (1.2 m) above finished floor to top of telephone.
         3) Refer to T-drawings for mounting required heights.
      b. Orient outlet boxes for vertical installation of wiring devices unless otherwise indicated.
      c. Provide minimum of 24 inches (600 mm) horizontal separation between flush mounted outlet boxes installed on opposite sides of fire rated walls.
      d. Unless otherwise indicated, provide separate outlet boxes for line voltage and low voltage devices.
      e. Locate outlet boxes so that wall plate does not span different building finishes.

f. Locate outlet boxes so that wall plate does not cross masonry joints.
g. [_____].

3.03 INSTALLATION OF EQUIPMENT AND CABLING

A. Cabling:
1. Do not bend cable at radius less than manufacturer's recommended bend radius; for unshielded twisted pair use bend radius of not less than 4 times cable diameter.
2. Do not over-cinch or crush cables.
3. Do not exceed manufacturer's recommended cable pull tension.
4. When installing in conduit, use only lubricants approved by cable manufacturer and do not chafe or damage outer jacket.

B. Wiring Method: Install cables in raceways and J-hooks except where cable trays are required in Drawings. Conceal raceway and cables except in unfinished spaces.
1. 1. Install plenum cable in environmental air spaces, including plenum and non-plenum ceilings.

C. Wiring Method: Conceal conductors and cables in accessible ceilings, walls, and floors where possible.

D. All exposed cabling shall be installed within conduit. Conduit in exposed areas shall match the color of the wall or ceiling it is attached to. Only exceptions are in data rooms, mechanical spaces, and above concealed ceilings.
1. Exposes Areas include but are not limited to:
a. Gymnasiums.
b. All open ceiling spaces.
c. Cabling that is visible above specially designed ceilings.

E. Pre-terminated fiber optic cabling will be accepted. All devices mandated within this specification shall be used to make up this pre-terminated cable.

F. Cabling Installation:
1. Install 110-style IDC termination hardware unless otherwise indicated.
2. MUTOA shall not be used as a cross-connect point.
3. Consolidation points may be used only for making a direct connection to telecommunications outlet/connectors.
4. Do not use consolidation point as a cross-connect point, as a patch connection, or for direct connection to workstation equipment.
5. Locate consolidation points for UTP at least 49 feet from communications equipment room.
6. Terminate all conductors; no cable shall contain unterminated elements. Make terminations only at indicated outlets, terminals, cross-connects, and patch panels.
7. Cables may not be spliced. Secure and support cables at intervals not exceeding 30 inches and not more than 6 inches from cabinets, boxes, fittings, outlets, racks, frames, and terminals.
8. Install lacing bars to restrain cables, to prevent straining connections, and to prevent bending cables to smaller radii than minimums recommended by manufacturer.
9. Bundle, lace, and train conductors to terminal points without exceeding manufacturer's limitations on bending radii, but not less than radii specified in BICSI ITSIM, "Cabling Termination Practices" Chapter. Install lacing bars and distribution spools.
10. Do not install bruised, kinked, scored, deformed, or abraded cable. Do not splice cable between termination, tap, or junction points. Remove and discard cable if damaged during installation and replace it with new cable.
11. Cold-Weather Installation: Bring cable to room temperature before de-reeling. Heat lamps shall not be used for heating.

G. Service Loops (Slack or Excess Length): Provide the following minimum extra length of cable, looped neatly:
1. At Distribution Frames: 120 inches (3000 mm).

2. At Outlets - Copper: 12 inches (305 mm).
3. At Outlets - Optical Fiber: 39 inches (1000 mm).

H. Copper Cabling:
1. Category 5e and Above: Maintain cable geometry; do not untwist more than 1/2 inch (12 mm) from point of termination.
2. For 4-pair cables in conduit, do not exceed 25 pounds (110 N) pull tension.
3. Use T568B wiring configuration.

I. Fiber Optic Cabling:
1. Prepare for pulling by cutting outer jacket for 10 inches (250 mm) from end, leaving strength members exposed. Twist strength members together and attach to pulling eye.
2. Support vertical cable at intervals as recommended by manufacturer.

J. Wall-Mounted Racks and Enclosures:
1. Install to plywood backboards only, unless otherwise indicated.
2. Mount so height of topmost panel does not exceed 78 inches (1980 mm) above floor.

K. Floor-Mounted Racks and Enclosures: Permanently anchor to floor in accordance with manufacturer's recommendations.

L. Floor-Mounted Enclosures: Connect adjacent cabinets together and remove interior side panels.

M. Identification:
1. Use wire and cable markers to identify cables at each end.
2. Use manufacturer-furnished label inserts, identification labels, or engraved wallplate to identify each jack at communications outlets with unique identifier.
3. Use identification nameplate to identify cross-connection equipment, equipment racks, and cabinets.
4. Labels shall meet the legibility, defacement, exposure, and adhesion requirements of UL 969.
5. Labels shall be preprinted using a mechanical means of printing (e.g. laser printer)
6. Where used for cable marking, provide vinyl substrate with a white printing area and a clear "tail" that self laminates the printed area when wrapped around the cable. If cable jacket is white, provide cable label with printing area that is any other color than white, preferable orange or yellow - so that labels are easily distinguishable.
7. Where insert type labels are used provide clear plastic cover over label.
8. Provide plastic warning tape 6 inches wide continuously printed and bright colored 18" above all direct buried services, underground conduits, and duct-banks.

3.04 CABLE TRAY INSTALLATION

A. Install cable trays according to NEMA FG 1.

B. Install cable trays as a complete system, including fasteners, hold-down clips, support systems, barrier strips, adjustable horizontal and vertical splice plates, elbows, reducers, tees, crosses, cable dropouts, adapters, covers, and bonding.

C. Install cable trays so that the tray is accessible for cable installation and all splices are accessible for inspection and adjustment.

D. Remove burrs and sharp edges from cable trays.

E. Join aluminum cable tray with splice plates; use four square neck-carriage bolts and locknuts.

F. Fasten cable tray supports to building structure.

G. Design fasteners and supports to carry cable tray, the cables, and a concentrated load of 200 lb. Comply with requirements in Section 260529 "Hangers and Supports for Electrical Systems."

H. Place supports so that spans do not exceed maximum spans on schedules and provide clearances shown on Drawings. Install intermediate supports when cable weight exceeds the load-carrying capacity of the tray rungs.

I. Construct supports from channel members, threaded rods, and other appurtenances furnished by cable tray manufacturer. Arrange supports in trapeze or wall-bracket form as required by application.

J. Support bus assembly to prevent twisting from eccentric loading.

K. Install center-hung supports for single-rail trays designed for 60 versus 40 percent eccentric loading condition, with a safety factor of 3.

L. Locate and install supports according to NEMA FG 1. Do not install more than one cable tray splice between supports.

M. Support wire-basket cable trays with center support hangers or trapeze hangers or wall brackets.

N. Support center support hangers or trapeze hangers for wire-basket trays with 1/4-inch diameter rods.

O. Make connections to equipment with flanged fittings fastened to cable trays and to equipment. Support cable trays independent of fittings. Do not carry weight of cable trays on equipment enclosure.

P. Install expansion connectors where cable trays cross building expansion joints and in cable tray runs that exceed dimensions recommended in NEMA FG 1. Space connectors and set gaps according to applicable standard.

Q. Make changes in direction and elevation using manufacturer's recommended fittings.

R. Make cable tray connections using manufacturer's recommended fittings.

S. Seal penetrations through fire and smoke barriers. Comply with requirements in Section 078413 "Penetration Firestopping."

T. Install capped metal sleeves for future cables through firestop-sealed cable tray penetrations of fire and smoke barriers.

U. Install cable trays with enough workspace to permit access for installing cables.

V. Install barriers to separate cables of different systems, such as power, communications, and data processing; or of different insulation levels, such as 600, 5000, and 15 000 V.

W. Install permanent covers, if used, after installing cable. Install cover clamps according to NEMA VE 2.

X. Clamp covers on cable trays installed outdoors with heavy-duty clamps.

Y. Install warning signs in visible locations on or near cable trays after cable tray installation.

Z. CABLE TRAY GROUNDING
   1. Ground cable trays according to NFPA 70 unless additional grounding is specified. Comply with requirements in Section 260526 "Grounding and Bonding for Electrical Systems."
   2. Cable trays with communications cable shall be bonded together with splice plates listed for grounding purposes or with listed bonding jumpers.

AA. Cable trays with control conductors shall be bonded together with splice plates listed for grounding purposes or with listed bonding jumpers.
   1. When using epoxy- or powder-coat painted cable trays as a grounding conductor, completely remove coating at all splice contact points or ground connector attachment. After completing splice-to-grounding bolt attachment, repair the coated surfaces with coating materials recommended by cable tray manufacturer.
   2. Bond cable trays to power source for cables contained within with bonding conductors sized according to NFPA 70, Article 250.122, "Size of Equipment Grounding Conductors."

3.05 FIELD QUALITY CONTROL

A. See Section 014000 - Quality Requirements, for additional requirements.

B. Comply with inspection and testing requirements of specified installation standards.

C. Provide all labor, materials, tools, field-test instruments and equipment required for the complete testing, identification, and administration of the work called for in the Contract Documents.

D. Only test results with a PASS will be accepted. Field-test results with a *PASS will be rejected.

E. Testing shall be performed on each cabling link. (100% Testing)

F. All Tests shall be documented.

G. Trained technicians who have successfully attended an appropriate training program and have obtained a certificate as proof thereof shall execute the tests. These certificates may have been issued by any of the following organizations or an equivalent organization:
   1. Manufacturer of the connectors or cable.
   2. Manufacturer of the test equipment used for the field certification.
   3. Training Organizations (BICSI, Equivalent)

H. The Owner or the Owner's representative may select a random sample of five percent of the installed service links. The Owner or the Owner's representative shall test these randomly selected links. The results obtained shall be compared to the data provided by the installation contractor. If more than two percent of the sample results differ in terms of the pass/fail determination, the installation contractor under supervision of the representative shall repeat 100 percent testing at no cost to the Owner.

I. Engage a qualified testing agency to evaluate cables.

J. Cable will be considered defective if it does not pass tests and inspections.

K. Visual Inspection:
   1. Inspect cable jackets for certification markings.
   2. Inspect cable terminations for color coded labels of proper type.
   3. Inspect outlet plates and patch panels for complete labels.
   4. Inspect patch cords for complete labels.
   5. Inspect cable placement, cable termination, grounding and bonding, equipment, and patch cords, and labeling of all components.

L. Category 6A Modular Plug Termination Link Testing Requirements:
   1. Each cabling link shall be tested for:
      a. Wire Map
      b. Length
      c. Propagation Delay
      d. Delay Skew
      e. DC Loop Resistance
      f. Insertion Loss
      g. NEXT (Near-End Cross Talk)
      h. PS NEXT (Power Sum Near-End Cross Talk)
      i. ACR-N (Power Sum Attenuation to Crosstalk Ratio Near-End)
      j. ACR-F (Attenuation to Crosstalk Ratio Far-End)
      k. PS ACR-F (Power Sum Attenuation to Crosstalk Ratio Far-End)
      l. Return Loss
   2. All installed cabling Modular Plug Terminated Links shall be field-tested and pass the test requirements and analysis as dictated by the Manufacturer to achieve the extended warranty. Any Modular Plug Terminated Link that fails these requirements shall be diagnosed and corrected until the Modular Plug Terminated Links meets the performance requirements. The final and passing results of the tests for all Modular Plug Terminated Links shall be provided in the test results documentation.

3. Modular Plug Terminated Links shall comply with the Permanent Link transmission requirements of the ANSI/TIA-568-2.D standard.
    a. The MPTL shall be tested with a Permanent Link Adapter on the Main Unit and a Patch Cord Adapter suitable for Category 6A testing on the Far End or Remote Test Equipment
4. Acceptance of the test results shall be given in writing after the project is fully completed and tested in accordance with the Contract Documents and to the satisfaction of the Owner.

M. Category 5e and Above Permanent Link Testing Requirements:
1. Each Cabling Link shall be tested for:
    a. Wire Map
    b. Length
    c. Propagation Delay
    d. Delay Skew
    e. DC Loop Resistance
    f. DC Resistance Unbalance within a pair
    g. DC Resistance Unbalance between pairs
    h. Insertion Loss
    i. NEXT (Near-End Cross Talk)
    j. PS NEXT (Power Sum Near-End Crosstalk)
    k. ACR-N (Attenuation to Crosstalk Ratio Near-End)
    l. PS ACR-N (Power Sum Attenuation to Crosstalk Ratio Near-End)
    m. ACR-F (Attenuation to Crosstalk Ratio Far-End)
    n. Return Loss
    o. TCL (Transverse Conversion Loss)
    p. ELTCTL (Equal Level Transverse Conversion Transfer Loss)
2. All installed cabling Permanent Links shall be field-tested and pass the test requirements and analysis as dictated by the Manufacturer for the extended warranty. Any Permanent Link that fails these requirements shall be diagnosed and corrected. Any corrective action that must take place shall be documented and followed with a new test to prove that the corrected Permanent Link meets performance requirements. The final and passing result of the tests for all Permanent Links shall be provided in the test results documentation.
3. Acceptance of the test results shall be given in writing after the project is fully completed and tested in accordance with the Contract Documents and to the satisfaction of the Owner.

N. Cable Testers:
1. The field-test instrument shall be within the calibration period recommended by the manufacturer. Minimum calibration is 12 months prior to testing.
2. The tester shall have Level IIIe accuracy in accordance with ANSI/TIA-1152-A
3. The tester must be capable of storing > 10,000 results for all measurements listed above.
4. Acceptable Manufacturers:
    a. Fluke Networks
    b. Prior approved manufacturer.

O. Final Verification Tests: Perform verification tests for UTP systems after the complete communications cabling and workstation outlet/connectors are installed.
1. Voice Tests: These tests assume that dial tone service has been installed. Connect to the network interface device at the demarcation point. Go off-hook and listen and receive a dial tone. If a test number is available, make and receive a local, long distance, and digital subscription line telephone call.
2. Data Tests: These tests assume the Information Technology Staff has a network installed and is available to assist with testing. Connect to the network interface device at the demarcation point. Log onto the network to ensure proper connection to the network.

END OF SECTION

DIVISION 28

SECTION 28 1300
ACCESS CONTROL SYSTEM

PART 1 GENERAL

1.01 SECTION INCLUDES

A. System Requirements

B. Access Control Field Devices

1.02 RELATED REQUIREMENTS

A. The Contractor, Subcontractors and/or suppliers providing goods or services referenced in or related to this Section shall also be bound by the Documents identified in Division 01 Section "Summary", Paragraph 1.1A, entitled "Related Documents." OR Drawings and general provisions of the Contract, including General and Supplementary Conditions and Division 01 Specification Sections, apply to this Section.

B. Division 07 - Firestopping.

C. Division 08 - Door Hardware: Electrically operated door hardware, for interface with access control system.
   1. Includes door hardware with integral request to exit devices.

D. Division 26 - Grounding and Bonding for Electrical Systems.

E. Division 26 - Conduit for Electrical Systems.

F. Division 26 - Identification for Electrical Systems: Identification products and requirements.

G. Division 27 - Structured Cabling: Data cables for access control system IP network connections.

H. Division 28 - Fire Detection Alarm: For interface with access control system.

I. Refer to the following construction documents for Data Room locations and device locations only.
   1. "T" Drawings – Technology Plans

J. Any apparatus, appliance, material, or work not shown on the Drawings but mentioned in the Specifications, or vice versa, and any incidental accessories necessary to make the work complete and perfect in all respects and ready for operation, even if not particularly specified, shall be provided without additional expense. Coordinate with each system manufacturer to insure all hardware, firmware, relays, or other necessary components are provided prior to bid submission.

K. All work of this Section to comply with the requirements of the Conditions of Contract, with all Specification Sections of Division 01 – General Requirements, with the Security Drawings, and with all other Contract Documents.

L. Refer to Division 26 of the Contract Documents, Electrical, for all Specifications governing the installation of raceway (conduit, EMT, cable trays, wire trough, etc.), system junction and pull boxes, and device rough-in boxes, for all Security System work shown on the Security Drawings. Conduit, back box, and trough work to be provided by this Contractor.

M. Refer to Division 26 of the Contract Documents, Electrical, for all work related to the interconnection of Security System equipment to 120 VAC power sources.

N. Refer to Division 09 of the Contract Documents, Finishes, for details relating to acoustical ceilings and gypsum board systems, floor finishes, painting, etc., for information pertinent to device and back box selection and installation.

O. Refer to Division 08 of the Contract Documents, Openings, for details relating to doors, door frames, windows, and window frames, for information pertinent to the selection of magnetic contact devices and their associated placement and installation, including back box selection and installation.

P. Refer to Division 08 of the Contract Documents, Openings, for details relating to door and door frame hardware and preparation, electrified lock power supplies, required coordination to accommodate these components and/or systems, lock voltage and current draw coordination, coordination of fail-safe electrified locks, and any other related equipment or requirements

Q. Refer to Division 06, Wood, Plastics, Composites, and coordinate all desk locations and installation details with the Millwork Contractor.

R. Review all other Specification Sections as required to achieve complete inter- trade coordination.

1.03 DEFINITIONS

A. API: Application Programming Interface

B. AVI: Audio Video Interleave

C. CA: Certificate Authority

D. CAC: Common Access Card

E. CE: European Union Conformity

F. CPU: Central Processing Unit

G. CSV: Comma Separated Values

H. DNS: Domain Name Server

I. DSM: Door Status Monitor

J. DVR: Digital Video Recorder

K. EACS: Electronic Access Control System

L. FCC: Federal Communications Commission

M. FIPS: Federal Information Processing Standard

N. FIFO: First In – First Out

O. FTP: File Transfer Protocol

P. FRAC: First Responder Authentication Credential

Q. GB: Gigabyte

R. GSOC: Global Security Operations Center

S. GUI: Graphical User Interface

T. HA: High Availability

U. HTML: Hypertext Markup Language

V. 4, H.265: Video Compression Standards

W. I2C: Inter-Integrated Circuit

X. IEEE: Institute of Electrical and Electronics Engineers

Y. I/O: Input / Output

Z. IP: Internet Protocol

AA. IS: Integrated System

BB. JPEG: Joint Photographic Experts Group

CC. LAN: Local Area Network

DD. LDAP: Lightweight Directory Access Protocol

EE. MB: Megabyte

FF. MJPEG: Motion JPEG

GG. MSATA: Mini-Serial Advanced Technology Attachment

HH. MSP: Mobile Security Professional
II. MTBF: Mean-Time Between Failure
JJ. NAS: Network Attached Storage
KK. NAT: Network Address Translation
LL. NBAPI: NetBox Application Programming Interface
MM. NECA: National Electric Code Association
NN. NFPA: National Fire Protection Association
OO. NVR: Network Video Recorder
PP. ODBC: Open Database Connectivity
QQ. OS: Operating System
RR. OVID: Open Video Integration Driver
SS. PDF: Portable Document Format
TT. PIN: Personal Identification Number
UU. PIV: Personal Identity Verification
VV. PoE: Power over Ethernet
WW. PTZ: Pan-Tilt-Zoom
XX. RAID: Redundant Array of Independent Disks
YY. RAM: Random Access Memory
ZZ. REX: Request to Exit
AAA. RFID: Radio Frequency Identification
BBB. RoHS: Restriction of Hazardous Substances
CCC. ROM: Read Only Memory
DDD. RU: Rack Unit
EEE. SFTP: Secure File Transfer Protocol
FFF. SHA: Secure Hash Algorithm
GGG. SIO: Serial Input / Output
HHH. SLA: Sealed Lead-Acid
III. SMS: Security Management System or Short Message Service (text messaging)
JJJ. SSL: Secure Sockets Layer
KKK. SUSP: Software Upgrade and Support Plan
LLL. TCP: Transmission control protocol - connects hosts on the Internet
MMM. TIA: Telecommunications Industry Association
NNN. TLS: Transport Layer Security
OOO. TWIC: Transportation Worker Identification Credential
PPP. UI: User Interface
QQQ. UPS: Uninterruptible Power Supply
RRR. UTP: Unshielded Twisted Pair
SSS. VMS: Video Management System
TTT. WAN: Wide Area Network
UUU. Wi-Fi: Wireless Network

VVV. AS NECESSARY: Shall mean work which is required for completed construction, but is not necessarily shown or described in the Contract Documents.

WWW. AS REQUIRED: Shall mean work which is required for completed construction, but is not necessarily shown or described in the Contract Documents.

XXX. Substantial Completion: Shall mean that the project is sufficiently complete to be utilized for its intended use as stated in the body of this written specification.

YYY. Contractor/INTEGRATOR: Refers to the biding/installation Contractor responsible for furnishing and installation of all work indicated within this specification.

1.04 REFERENCE STANDARDS

A. NECA 1 - Standard for Good Workmanship in Electrical Construction; 2015.

B. NFPA 70 - National Electrical Code; Most Recent Edition Adopted by Authority Having Jurisdiction, Including All Applicable Amendments and Supplements.

C. NFPA 101 Life Safety Code; Most Recent Edition Adopted by Authority Having Jurisdiction, Including All Applicable Amendments and Supplements.

D. UL 294 - Access Control System Units; Current Edition, Including All Revisions.

E. UL 1076 - Proprietary Burglar Alarm Units and Systems; Current Edition, Including All Revisions.

F. System shall be RoHS (Restriction of Hazardous Substances) compliant and meet proposed amendments to the reduction of toxic substances in manufacturing in stated in the Environmental Design of Electrical Equipment Act (EDEE).

G. Installation shall comply with NECA 1-2010 “Standard Practice of Good Workmanship in Electrical Construction”

H. Installation shall comply with NEC/NFPA 70E “Standard for Electrical Safety in the Workplace”

I. Electronic data exchange between Video Surveillance System and the Access Control System shall comply with SIA TVAC

J. Installation shall comply with FCC CFR 47 Part 15 Class A “Telecommunications, Radio, Frequency, Digital Device Emission:

K. Installation shall comply with Federal, State, and Local Codes and Authority Having Jurisdiction (AHJ).

L. Electrical Components, Devices, and Accessories: Listed and labeled as defined in NFPA 70, by a qualified testing agency, and marked for intended location and application.

1.05 ADMINISTRATIVE REQUIREMENTS

A. Coordination:
   1. Coordinate the work with other installers to provide suitable door hardware as required for both access control functionality and code compliance.
   2. Coordinate the placement of readers with millwork, furniture, equipment, etc. installed under other sections or by others.
   3. Coordinate the work with other installers to provide power for equipment at required locations.
   4. Notify Architect of any conflicts with or deviations from Contract Documents. Obtain direction before proceeding with work.

B. Access Control Software and Controllers:
   1. Provided by Owner at a later date.

C. Preinstallation Meetings:
   1. Conduct meeting with facility representative to review reader and equipment locations.
   2. Conduct meeting with facility representative and other related equipment manufacturers to discuss access control system interface requirements.

D. Confidentiality of Documents

1. The project documents, consisting of all technical proposals, drawings, specifications, shop drawings, as-built drawings, manufacturer's literature, etc., shall be considered proprietary information and are to be treated with complete confidentiality. Dissemination of any security system documentation to any party not considered "need-to-know" without a pre-defined and approved agreement will be considered a violation of the contract documents and all pursuant clauses regarding financial penalties, project termination, and/or legal prosecution will apply. The Contractor is to obtain a list of "need-to-know" parties from the Owner and/or Construction Manager.
2. Use of the Contract drawings and specifications is restricted to the original site for which they were prepared. Publication therefore is expressly limited to such use. Re-use, reproduction, storage by any medium or publication by any method in whole or in part is prohibited. Visual contact with the Contract drawings and specifications constitutes prima facie evidence of the acceptance of these restrictions. Unlawful publication, dissemination, and use of these documents carry significant liability and the Owner maintains the right to legally pursue restitution and/or penalty for violation of these confidentiality conditions.
3. All documents marked "DO NOT DUPLICATE" are to be returned to the Construction Manager for proper disposal and handling upon completion of their relevant use.

1.06 SUBMITTALS

A. See Division 01 – Administrative Requirements for submittal procedures.

1.07 EVIDENCE OF QUALIFICATIONS FOR INSTALLER:

1. The Contractor shall be a bona fide security systems contractor, licensed by the State of Rhode Island for the installation of the low voltage security and signal communication systems, and engaged in security system maintenance, service and contracting for at least the last five years.
2. The Contractor shall employ technicians who have been trained by the Manufacturer specified within this section to install the systems of this Manufacturer.
3. The contractor shall be a factory authorized stocking distributor of the manufacturer of the equipment included in the system so that immediate replacement parts can be made from inventory and service provided as needed on an emergency basis.
4. The Contractor shall submit with the bid a manufacturer's certificate of acceptance of the qualifications of the Installing Contractor to install, test, maintain and repair the manufacturer's equipment.
5. In order for the Security Consultant to verify that they meet the competency requirements of this specification, Contractors must submit the following information if so requested:
   a. Proof that the Contractor has installed, services and maintained similar security systems for a minimum of ten (10) years.
   b. Proof that the Contractor is a firm which currently and regularly installs, services and maintains security systems as a full time business.
   c. The names and qualifications of security system technicians that shall perform and supervise the work, and perform tests or adjustments on the systems and equipment. Qualifications shall include all schooling, training, and history of work experience.
   d. A list of four prior systems comparable to the one specified under this contract which were installed, serviced, and maintained satisfactorily by the Contractor for a minimum of one (1) year. Each system listed shall include the firm or owner, location, person to contact (with telephone number), date of installation and service period, and a brief description of the system and work performed on the system.
6. The Contractor shall submit any other information required by the Security Consultant to determine the competency of the Contractor. If this information is not submitted as requested, it shall be submitted within the time specified by the Architect after the bid opening. If the Contractor fails to submit the information in accordance with the Security Consultant's request, the Contractor shall be declared non-responsive, and may be rejected to perform the work specified within this section.

B. Design Data: Standby battery/UPS Calculations

C. Manufacturer's Installation Instructions: Indicate application conditions and limitations of use stipulated by product testing agency. Include instruction for storage, handling, protection, examination, preparation, installation, and operation of product.

D. Manufacturer's detailed field-testing procedures.

E. Maintenance contracts.

F. Product Data: Provide details and technical specifications for each product indicated. Include physical dimensions, features, performance, electrical characteristics, ratings, software versions, and operating system details.

G. Shop Drawings:
   1. General: General: Bid documents, including drawings, details and specifications are considered conceptual in nature, and provide direction on products and project requirements. Contractors is given a choice of methods that may be incorporated into the system. These choices may affect the overall design, configuration and installation of the proposed system.
   2. Contractor Responsibility: Prepare and submit shop drawings, rendered in the latest AutoCAD DWG file format, which show details of all work to ensure proper installation of the work using those materials and equipment specified or allowed under the approved plans and specifications. A complete Shop Drawing submittal drawing package shall consist of Drawings, Equipment Data Sheet Submittals, and an Acceptance Testing Plan.
   3. Completeness: The Equipment Submittals, Acceptance Testing Plan, and the Shop Drawings should be submitted as a complete and contiguous package. Partial or unmarked submittals will not be accepted for review.
   4. Scheduling: A schedule of shop drawing submissions shall be submitted for the Architect and Owner's Representative review on a form acceptable to the Architect within ten (10) days after award of the Contract. The schedule of shop drawing submissions shall include as a minimum, but not limited to the requirements stated herein.
   5. Requirements: Provide the following information complete, and in the manner described herein:
      a. Hardware Specified Herein
      b. Shop Drawings: Shop Drawings shall be numbered consecutively and shall accurately and distinctly present the following information:
         1) Title Sheet
         2) Floor Plans: Showing devices, pull boxes, cabinets, conduits and conductors in their proposed locations with device numbering scheme.
         3) Riser Diagram: Showing all conduit relationships between devices shown on the Floor Plans. Show all power sources.
      c. Equipment Wiring Diagrams
         1) Show a pictorial illustration of each equipment enclosure and/or terminal cabinet, including terminals, components and wiring devices.
         2) Show the device nomenclature exactly as shown on the single line diagrams.
         3) Terminations: Show every termination and terminating cable, with applicable cable and wire numbers matching the single line diagrams.
            (a) Every termination in the system must be documented.
            (b) Termination information may be rendered as a wiring list(s), if properly coordinated with, and referenced to, typical component and single-line diagrams. Otherwise, the Shop Drawings shall show a pictorial of every component in the system, with its terminations.
         4) Show wire colors for each terminal.
         5) For each wire exiting the enclosure, show the destination of the wire by floor, room number and the drawing number of the panel where the wire terminates.
         6) Provide working dimensions and erection dimensions.
         7) Arrangements and sectional views

8) Necessary details, including complete information for making connections between work under this Contract, existing work, and work under other Contracts.
9) Stock or standard drawings will not be accepted for review unless full identification and supplementary information is shown thereon in ink or typewritten form.
10) Duplicate of design drawings may be used where each sheet is modified to reflect contractor coordination, specific requirements of the project and multi discipline conditions.
11) Each Drawing or page shall include:
    (a) Project name, Project Number and descriptions.
    (b) Submittal date and space for revision dates.
    (c) Identification of equipment, product or material.
    (d) Name of Contractor and Subcontractor.
    (e) Name of Supplier and Manufacturer.
    (f) Relation to adjacent structure of material.
    (g) Physical dimensions clearly identified.
    (h) ASTM and Specifications references.
    (i) Identification of deviations from the Contract Documents.
    (j) Contractor's stamp, initialed or signed, dated and certifying to review of submittal, certification of field measurements and compliance with Contract.
    (k) Location at which the equipment or materials are to be installed. Location shall mean both physical location and location relative to other connected or attached material.

d. Equipment Submittals
1) Provide a Title Page, with project name, Contractor’s name and address, contact information, date of submission, and submission revision number.
2) Provide a Parts List, for proposed equipment, materials, components and devices, listing the following information for each line item:
    (a) The system type
    (b) Model number
    (c) Specification sheet page reference
3) Provide Manufacturers Specification Sheet with descriptive information for equipment, materials, components and devices. Number each page, to correspond with the Parts List.
4) Clearly delineate (with highlighter, arrow, or underline) on each specification sheet, specific model numbers, options and configurations being proposed for this project.
5) Indicate kinds of materials and finishes for equipment where more than one option is presented.

e. Incomplete or unchecked submittals which do not contain complete data on the work and full information on related matters will be returned for correction.

f. Verification: The contractor shall check and acknowledge all shop drawings and shall place his signature on all shop drawings submitted for approval. Contractor's signature shall constitute a representation that all quantities, dimensions, field construction criteria, materials, catalog numbers, performance criteria and similar data have been verified and that, in his opinion, the submittal fully meets the requirements of the Contract Documents.

g. Timeliness: The Contractor shall schedule, prepare and submit a complete shop drawing assembly in accordance with a time-table that will allow his suppliers and manufacturers sufficient time to fabricate, manufacture, inspect test and deliver their respective products to the project site in a timely manner so as to not delay the complete performance of the work.

h. Departure from Contract Requirements: If shop drawings show departures from the Contract requirements, the Contractor shall make specific mention thereof in his letter of transmittal, otherwise review of such submittals shall not constitute review of the departure. Review of the drawings shall constitute review of the specific subject matter for which the drawings were submitted and not of any other structure, materials, equipment, or apparatus shown on the drawings.

i. Contractor Responsibility: The review of shop drawings will be general and shall not relieve the Contractor of responsibility for the accuracy of such drawings, nor for the proper fitting and construction of the work, nor for the furnishing of materials or work required by the Contract. No construction called for by shop drawings shall be initiated until such drawings have been reviewed and approved.

j. Shop Drawing Submittal Review: The procedure in seeking review of the shop drawings shall be as follows:

1) The Contractor shall submit four (4) complete sets and/or electronic PDFs of shop drawings with equipment submittals and other descriptive data with one copy of a letter of transmittal to the Architect for review thirty (30) working days after award of the contract. The letter of transmittal shall contain the project name, Architect's Project Number, the name of the Contractor, the list of drawings submitted including numbers and titles, requests for any review of departures from the contract requirements and any other pertinent information. Drawings submitted for review shall be full-sized and included with the equipment submittals.

2) Drawings or descriptive data will be stamped "Reviewed", "Furnish as Corrected", "Revise and Resubmit", "Rejected" or 'Submit Specific Item' and one copy with a Letter of Transmittal will be transmitted to the Contractor with the return of submitted documents.

3) If a shop drawing or data is stamped "Reviewed" or "Furnish as Corrected", no additional submittal is required for that shop drawing.

4) If a shop drawing or data is stamped "Revise and Resubmit" or "Rejected", the Contractor shall make the necessary corrections and resubmit the documents as required above. The letter transmitting corrected documents shall indicate that the documents are re-submittals.

5) The Contractor shall revise and resubmit the shop drawing as required, until they are stamped either "Reviewed" or "Furnish as Corrected."

H. Equipment and Software List: Include every piece of equipment and software by product/model name and/or number, manufacturer, serial number, revision number, location, and date of original installation. If factory and/or bench testing regimens are required by the project plan, add pretesting record of each piece of equipment and software, listing name of person testing, date of test, and adjustments made.

I. CE and FCC Compliance Certificates:

J. Field quality-control reports

K. Current Specified Manufacturer Integrator Certification Letter

L. Current Specified Manufacturer Training Certificates (listing expiration dates) for Two technicians from the supporting office

M. Warranty: Software support and warranty information for all components, including Service Level Agreement (SLA) details, and duration of agreement from date of system acceptance by Owner. Submit sample of manufacturer's warranty and documentation of final executed warranty completed in Owner's name and registered with manufacturer.

N. Project Record Documents: Record actual locations of system components and installed wiring arrangements and routing.

O. Operation and Maintenance Data: Include detailed information on system operation, equipment programming and setup, replacement parts, and recommended maintenance procedures and intervals.
   1. Include contact information for entity that will be providing contract maintenance and trouble call-back service.
   2. General: The Contractor is responsible for providing accurate drawings and equipment manuals describing and depicting the systems as they are actually installed and operated.
   3. Phase One: Notwithstanding requirements specified elsewhere, submit the following labeled as the "Operating and Maintenance Manual" within thirty (30) days after Final Acceptance of the Installation:
      a. Record Drawings: Submit two (2) copies of revised versions of drawings as submitted in the "Shop and Field" and "Equipment Wiring Diagrams" Submittals showing actual device locations, conduit routing, wiring and relationships as they were constructed. Include nomenclature showing as-built wire designations and colors. Drawings shall include room numbers coinciding with Owner space planning numbering. Drawings shall be submitted in electronic editable AutoCAD files, in “.dwg” format, on CD or DVD disks.
      b. Manuals: Submit two (2) copies of each of the following materials in bound manuals, or electronic PDF copies on CD/DVD discs, with labeled dividers:
         1) A final Bill of Material for each system.
         2) Equipment Instruction Manuals: Complete, project specific comprehensive instructions for the operation of devices and equipment provided as part of this work.
         3) Manufacturers Instruction Manuals: Specification sheets, brochures, Operation Manuals and service sheets published by the manufacturers of the components, devices and equipment provided.
         4) Include information for testing, repair, troubleshooting, assembly, disassembly and recommended maintenance intervals.
         5) Provide a replacement parts list with current prices. Include list of recommended spare parts, tools, and instruments for testing and maintenance purpose.
         6) Performance, Test and Adjustment Data: Comprehensive documentation of performance verification according to parameters specified herein.
         7) Warranties: Provide an executed copy of the Warranty Agreement and copies of all manufacturers’ Warranty Registration papers as described herein.

1.08 QUALITY ASSURANCE

A. Comply with the following:
   1. NFPA 70.
   2. NFPA 101 (Life Safety Code).
   3. The requirement of the local authorities having jurisdiction.
   4. Applicable TIA/EIA standards.

B. Maintain at the project site a copy of each referenced document that prescribes execution requirements.

C. Manufacturer Qualifications: Company specializing in manufacturing the products specified in this section with minimum three years documented experience.

D. Installer qualifications: company specializing in performing the work of this section with minimum three years documented experience with access control systems of similar size, type, and complexity and providing contract maintenance service as a regular part of their business; authorized manufacturer's representative.
   1. Contract maintenance office located within 100 miles (160km) of project site.

E. Maintenance contractor qualifications: same entity as installer.

F. Product Listing Organization Qualifications: An organization recognized by OSHA as a Nationally Recognized Testing Laboratory (NRTL) and acceptable to authorities jurisdiction.

G. The requirements of the State Building Code and local regulations establish the minimum acceptable quality of workmanship and materials, and all work shall conform thereto unless more stringent requirements are indicated or specified herein.

H. All work shall comply with the latest editions of the codes as referenced herein.

I. Follow manufacturer's directions for articles furnished, in addition to directions shown on drawings or specified herein.

J. Protect all work, materials, and equipment from damage during process of work. Replace all damaged or defective work, materials and equipment without additional cost to the Project.

K. All equipment and materials for permanent installation shall be the products of recognized manufacturers and shall be new.

L. Equipment and materials shall:
   1. Where normally subject to Underwriters Laboratory Inc. listing or labeling services, be so listed or labeled.
   2. Be without blemish or defect.
   3. Not be used for temporary purposes.
   4. Be in accordance with the latest applicable NEMA standards.
   5. Be products which will meet with the acceptance of all authorities having jurisdiction over the work. Where such acceptance is contingent upon having the products examined, tested and certified by Underwriters or another recognized testing laboratory, the product shall be so examined, tested and certified.

M. Except for conduit, conduit fittings, outlet boxes, wire and cable, all items of equipment or material of one generic type shall be the product of one manufacturer throughout.

N. For items which are to be installed but not purchased as part of the electrical work, the electrical work shall include:
   1. The coordination of their delivery.
   2. Their unloading from delivery trucks driven into any point on the property line at grade level.
   3. Their safe handling and field storage up to the time of permanent placement in the project.
   4. The correction of any damage, defacement or corrosion to which they may have been subjected. Replacement, if necessary, shall be coordinated with Contractor who originally purchased the item.
   5. Their field make up and internal wiring as may be necessary for their proper operation.
   6. Their mounting in place including the purchase and installation of all dunnage, supporting members, and fastenings necessary to adapt them to architectural and structural conditions.
   7. Their connection to building wiring including the purchase and installation of all termination junction boxes necessary to adapt and connect them to this wiring. Included also shall be the purchase and installation of any substitute lugs or other wiring terminations as may be necessary to adapt their terminals to the building wiring as called for and to the connection methods set forth in these specifications.

O. Items which are to be installed but not purchased as part of the electric work shall be carefully examined upon delivery to the project. Claims that any of these items have been received in such condition that their installation will require procedures beyond the reasonable scope of the electric work will be considered only if presented in writing within one week of the date of delivery to the project of the items in question. The work includes all procedures, regardless of how extensive, necessary to put into satisfactory operation, all items for which no claims have been submitted as outlined above.

P. Seismic Performance: Provide equipment capable of withstanding the effects of earthquake motions determined according to ASCE/SEI 7 and current building codes for the state of RI.

Q. The term “withstand” means “the system(s) will remain in place without separation of any parts when subjected to the seismic forces specified and the system will be fully operational after the seismic event.”

1.09 PROJECT CONDITIONS

A. Environmental Conditions: Capable of withstanding the following environmental conditions without mechanical or electrical damage or degradation of operating capability:
   1. Interior, Controlled Environment: System components installed in temperature-controlled interior environments shall be rated for continuous operation in ambient temperatures of 36 to 122 deg F (2 to 50 deg C) dry bulb and twenty to ninety percent (20-90%) relative humidity, noncondensing. Use NEMA 250, Type 1 enclosures.
   2. Interior, Uncontrolled Environment: System components installed in non- temperature-controlled interior environments shall be rated for continuous operation in ambient temperatures of 0 to 122 deg F (minus 18 to plus 50 deg C) dry bulb and twenty to ninety percent (20-90%) relative humidity, noncondensing. Use NEMA 250, Type 3R enclosures.
   3. Exterior Environment: System components installed in locations exposed to weather shall be rated for continuous operation in ambient temperatures of minus 30 to plus 122 deg F (minus 34 to plus 50 deg C) dry bulb and twenty to ninety percent (20-90%) relative humidity, condensing. Rate for continuous operation when exposed to rain as specified in NEMA 250, winds up to 85 mph and snow cover up to 24 inches thick. Use sufficiently rated NEMA 250 enclosures.
   4. Hazardous Environment: System components located in areas where fire or explosion hazards may exist because of flammable gases or vapors, flammable liquids, combustible dust, or ignitable fibers shall be rated, listed, and installed according to NFPA 70.
   5. Corrosive Environment: System components subject to corrosive fumes, vapors, and wind-driven salt spray in coastal zones. Use sufficiently rated NEMA 250 enclosures.
   6. Security Environment: Camera housing for use in high-risk areas where surveillance equipment may be subject to physical violence.

1.10 DELIVERY, STORAGE, AND HANDLING

A. Receive, inspect, handle, and store products in accordance with manufacturer's instructions.

B. Store products in manufacturer's unopened packaging, keep dry and protect from damage until ready for installation.

1.11 FIELD CONDITIONS

A. Maintain field conditions within manufacturer's required service conditions during and after installation.

1.12 WARRANTY

A. See Division 01 – Closeout Submittals for additional warranty requirements.

B. The Integrator guarantees the Systems to be installed under this specification to be free from any defects in workmanship and materials for a period of one (1) year from the date of final completion/acceptance of the project by the Owner as evidenced by the date of final payment for the work. The Contractor shall promptly and at their own expense remedy any defects in the work and pay for any damage to other work resulting thereof, which shall appear during the period of time covered by this guarantee. Neither the final certificate of payment nor any provisions in this Agreement shall constitute an acceptance of work not done in accordance with this specification or relieve the Contractor of liability with respect to any expressed warranties or guarantees or responsibility for faulty materials or workmanship.

C. Special Warranty: Manufacturer's standard form in which manufacturer agrees to repair or replace components of equipment related to the Access Control System, and control-station equipment that fail in materials or workmanship within specified warranty period.
   1. Warranty Period: The standard manufacturer’s warranty shall apply or a minimum of a one (1) year warranty from the date of Substantial Completion.

D. The Integrator shall provide all services required to maintain the system in an operational state as specified by the manufacturer for a period of one (1) year after acceptance.

E. Service response shall be within twelve (12) hours of the initial request for service and shall be provided twenty-four (24) hours per day, seven (7) days per week and three hundred sixty-five (365) days per year.

F. Contractor shall include, as part of this warranty, a program for maintenance for each integrated system.
   1. Provide details of coverage, preventive maintenance schedules, exclusions and service rates for all billable time and travel charges.
   2. Maintenance shall include two (2) semi-annual inspections and tests to verify the intended operation of the security system(s). System testing shall include but not be limited to the testing of all devises, fault modes and batteries. A detailed test report indicating these results and any corrective measures shall be furnished to the owner.

G. The Contractor shall provide software and firmware upgrades as required and available to the Owner.

H. Submit manufacturer's standard warranties.

PART 2 PRODUCTS

2.01 ACCESS CONTROL FIELD DEVICES

A. Credential Readers:
   1. The selected manufacturer shall be HID – USA in 15370 Barranca Pkwy, Irvine, CA. Other manufacturers will be considered, providing equipment meets or exceeds the quality and functionality specified.
   2. The selected model shall be:
   3. HID SE RP40: Wall-mounted multiCLASS SE Reader
   4. HID, SE RP15: Wall-Mounted Mullion Mount multiCLASS SE Reader
   5. Features:
      a. Accepts 5 to 16 volts, meeting most voltage requirements.
      b. Available with Wiegand or Clock-and-Data interface.
      c. Allows easy upgrade from magstripe to a proximity reader; no rewiring or pulling of new cable required.
      d. Offers high reliability, consistent read-range and low power consumption in an easy-to-install package.
      e. Mounts directly onto metal with no change in read range performance.
      f. Provides multicolor LED, compatibility with all standard access control systems and internal or host control of LED and beeper.
      g. Includes multilingual installation manual.
   6. Specifications:
      a. Typical Maximum* Read Range
         1) ProxCard® II card – up to 5.5 inches
         2) ISOProx® II card – up to 5 inches
      b. DuoProx® II card – up to 5 inches
         1) Smart ISOProx®/DuoProx® cards – up to 5 inches
         2) Proximity & MIFARE® card – up to 5 inches
         3) ProxCard® Plus card – up to 2 inches
         4) ProxKey® II keyfob – up to 2 inches
         5) MicroProx® Tag – up to 2.5 inches
         6) *Depending on local installation conditions.
      c. Dimensions:
         1) inches x 1.7 inches x 1.0 inch
      d. Material:
         1) Polycarbonate UL 94

e. Power Supply:
   1) Standard MiniProx: 5-16 VDC
   2) Loc. MiniProx: 5-16 VDC
   3) Linear power supplies are recommended.
f. Current Requirements:
   1) Max Average 30 mA
   2) Typ Peak: 75 mA
g. Operating Temperature:
   1) -22° to 150° F (-30° to 65° C)
h. Operating Humidity:
   1) 0-95% relative humidity non-condensing
i. Weight:
   1) With Terminal Strip: 3.5 oz.
   2) With Pigtail: 3.8 oz.
   3) Loc. MiniProx: 3.8 oz.
j. Transmit Frequency:
   1) 125 kHz
k. Excite Frequency:
   1) 125 kHz
l. Cable Distance:
   1) Wiegand Interface: 500 feet
   2) Clock-and-Data Interface: 50 feet
   3) Recommended cable is ALPHA 1295 (22 AWG) 5 conductor
   4) Minimum stranded with overall shield or equivalent. Additional conductors may be required for LED or beeper control.
m. Environmental:
   1) IP55
n. Certifications:
   1) UL294/cUL (US), FCC Certification (US), IC (Canada), CE (EU),
   2) C-tick (Australia, New Zealand),
   3) SRRC (China), MIC (Korea), NCC (Taiwan), MIC (Japan), iDA
   4) (Singapore), RoHS

B. Request to Exit Sensor (REX / RTE):
   1. Coordinate with the door hardware vendor and use the Provided Exit Request Touch Bar or Integral Lock Signal Switch, where specified in Division 08.
   2. Where integral exit request touch bar is not specified, furnish an install the following:
      a. Manufacturer:
         1) BOSCH
            (a) #DS160
            (b) Approved Equivalent

C. Door Position Switches (Door Contacts):
   1. All Door Position Switches shall be Double Pole-Double Throw (DPDT).
   2. Door position switches shall be installed by the Contractor. The Contractor shall align, prepare, and fabricate doors and frames to accept specified door position switches. The Contractor shall be responsible for coordinating the installation, so systems and hardware operate as specified. Door Position Switches will be installed at the top of the door in the first instance. If unable to install on top, then side installation on the handle side is acceptable.
   3. Surface Mounted Door Switch: DPDT sensor. Interlogix or approved equal. Surface Mounted Magnetic Switch with armored cable. Route armored cable to junction box and permanently secure to box with clamp or set-screws. Use only where flush-mounted devices cannot be installed.
   4. Non-fire rated Doors, Flush Mount:

a. Interlogix Model 1076C-W or approved equivalent Concealed Magnetic Door Switch.

5. Fire Rated Doors:
   a. General: Contractor shall coordinate access control hardware equipment and installation so as to maintain the Fire Rating of each specific door to the satisfaction of the Local Authority Having Jurisdiction.

PART 3 EXECUTION

3.01 EXAMINATION

A. Verify that field measurements are as indicated.

B. Verify that ratings and configurations of system components are consisted with the indicated requirements.

C. Verify that mounting surfaces are ready to receive the system components.

D. Verify that branch circuit wiring is installed, completed, tested, and ready for connection to system.

E. Verify that conditions are satisfactory prior to starting work.

F. Device Locations
   1. All device locations are to be field verified with the Owner prior to start of project. Architectural drawings are for approximation purposes only. Additional charges will not be allowed for outlet installation in areas not reviewed or approved by the Owner.

G. Examine pathway elements intended for cables. Check raceways and other elements for compliance with space allocations, installation tolerance, hazards to camera installation, and other conditions affecting installation.

H. Proceed with installation only after unsatisfactory conditions have been corrected.

3.02 INSTALLATION

A. Install access control system in accordance with NECA 1 (general workmanship).

B. Install products in accordance with manufacturer's instructions.

C. Unless otherwise indicated, use wiring in conduit.
   1. Use suitable listed cables in we locations, including underground raceways.
   2. Use suitable listed cables for vertical wire applications.
   3. All cabling shall be plenum rated.

D. Install wiring in conduit for the following:
   a. Where required for rough-in.
   b. Where required by the AHJ.
   c. Where exposed to damage.
   d. Where installed outside the building.
   e. For exposed connections from outlet boxes to devices.
   2. Conduit: comply with Division 26
   3. Conceal cables unless specifically indicated to be exposed.
   4. User power transfer hinges specified within Division 08 for concealed connections to door hardware.
   5. Cables in the following areas may be exposed:
      a. Equipment Closets
   6. Route exposed cables in parallel or perpendicular to building structural members and surfaces.
   7. Do not exceed manufacturer's recommended maximum cable length between components.

E. Provide grounding and bonding in accordance with Division 26.

F. Install firestopping to preserve the fire resistance rating of partitions and other elements, using materials and methods specified in Division 07.

G. Install all devices and infrared illuminators level and plumb.

H. Install power supplies and other auxiliary components at control stations unless otherwise indicated.

I. Identify system components, wiring, cabling, and terminals according to ANSI/EIA/TIA standards.
   1. Environment
      a. Integration components shall generally comprise special elements of independent subsystems, and shall be located within, or in close proximity to, the processing components of each independent subsystem. Where subsystems require special hardware or communications interfaces to support integration, the special hardware should be located near the independent subsystem processing components or network appliance, based on the manufacturers' recommendation. See the drawings for details on mounting locations.

3.03 CLEANING

A. Remove rubbish and debris: Installation contractor is not allowed you use the onsite dumpster and is responsible to discard their own debris off site.

B. Clean installed items using methods and materials recommended in writing by manufacturer.

C. Clean exposed surfaces to remove dirt, paint, or other foreign material and restore to match original factory finish.

3.04 CLOSEOUT ACTIVITIES

A. See Division 01 – Closeout Submittals for Closeout Submittals.

B. Demonstration: Demonstrate proper operations of system to Owner and correct deficiencies or make adjustments as directed.

3.05 PROTECTION

A. Protect installed system components from subsequent construction operations.

3.06 MAINTENANCE

A. See Division 01 – Execution and Closeout Requirements for additional requirements relating to maintenance service.

B. Adjustments:
   1. Occupancy Adjustments: When requested within twelve (12) months of date of Substantial Completion, provide on-site assistance in adjusting system to suit actual occupied conditions. Provide up to two (2) visits to Project during other-than-normal occupancy hours for this purpose. Tasks shall include, but are not limited to, the following:
      a. Check cable connections.
      b. Check proper operation of access control devices.
      c. Provide a written report of adjustments and recommendations.

C. Provide to Owner, at no extra cost, a separate maintenance contract for the service and maintenance of the Access Control System for One Year from date of Substantial Completion. Include a separate description of preventative maintenance, systematic examination, cleaning, inspection, and testing, with a detailed schedule.

D. Conduct site visit at least once every three months to perform inspection, testing, and preventative maintenance. Submit report to Owner indicating maintenance performed along with evaluations and recommendations.

E. Provide trouble call-back service upon notification by Owner:
   1. Include allowance for call-back service during normal working hours at no extra cost to Owner.

2. Owner will pay for call-back service outside of normal working hours on an hourly basis, based on actual time spent at the site and not including travel time; include hourly rate and definition of normal working hours in maintenance contract.

END OF SECTION

SECTION 28 2300
VIDEO SURVEILLANCE SYSTEM

SECTION 1 - GENERAL

1.01 SECTION INCLUDES

A. System Requirements

B. Cameras

1.02 RELATED REQUIREMENTS

A. The Contractor, Subcontractors and/or suppliers providing goods or services referenced in or related to this Section shall also be bound by the Documents identified in Division 01 Section "Summary", Paragraph 1.1A, entitled "Related Documents." OR Drawings and general provisions of the Contract, including General and Supplementary Conditions and Division 01 Specification Sections, apply to this Section.

B. Section Division 07 - Firestopping.

C. Division 26 - Conduit for Electrical Systems.

D. Division 26 - Identification for Electrical Systems: Identification products and requirements.

E. Division 27 - Structured Cabling: Data cables for access control system IP network connections.

F. Refer to the following construction documents for Data Room locations and device locations only.
   1. "T" Drawings – Technology Plans

G. Any apparatus, appliance, material, or work not shown on the Drawings but mentioned in the Specifications, or vice versa, and any incidental accessories necessary to make the work complete and perfect in all respects and ready for operation, even if not particularly specified, shall be provided without additional expense. Coordinate with each system manufacturer to insure all hardware, firmware, relays, or other necessary components are provided prior to bid submission.

H. All work of this Section to comply with the requirements of the Conditions of Contract, with all Specification Sections of Division 01 – General Requirements, with the Security Drawings, and with all other Contract Documents.

I. Refer to Division 26 of the Contract Documents, Electrical, for all Specifications governing the installation of raceway (conduit, EMT, cable trays, wire trough, etc.), system junction and pull boxes, and device rough-in boxes, for all Security System work shown on the Security Drawings. Conduit, back box, and trough work to be provided by this Contractor.

J. Refer to Division 26 of the Contract Documents, Electrical, for all work related to the interconnection of Security System equipment to 120 VAC power sources.

K. Refer to Division 09 of the Contract Documents, Finishes, for details relating to acoustical ceilings and gypsum board systems, floor finishes, painting, etc., for information pertinent to device and back box selection and installation.

L. Refer to Division 08 of the Contract Documents, Openings, for details relating to doors, door frames, windows, and window frames, for information pertinent to the selection of magnetic contact devices and their associated placement and installation, including back box selection and installation.

M. Refer to Division 08 of the Contract Documents, Openings, for details relating to door and door frame hardware and preparation, electrified lock power supplies, required coordination to accommodate these components and/or systems, lock voltage and current draw coordination, coordination of fail-safe electrified locks, and any other related equipment or requirements

N. Refer to Division 27, Telecommunications for all Ethernet Cabling for the Cameras.

O. Review all other Specification Sections as required to achieve complete inter- trade coordination.

1.03 DEFINITIONS

A. API: Application Programming Interface
B. AVI: Audio Video Interleave
C. CA: Certificate Authority
D. CAC: Common Access Card
E. CE: European Union Conformity
F. CPU: Central Processing Unit
G. CSV: Comma Separated Values
H. DNS: Domain Name Server
I. DSM: Door Status Monitor
J. DVR: Digital Video Recorder
K. EACS: Electronic Access Control System
L. FCC: Federal Communications Commission
M. FIPS: Federal Information Processing Standard
N. FIFO: First In – First Out
O. FTP: File Transfer Protocol
P. FRAC: First Responder Authentication Credential
Q. GB: Gigabyte
R. GSOC: Global Security Operations Center
S. GUI: Graphical User Interface
T. HA: High Availability
U. HTML: Hypertext Markup Language
V. H.264, H.265: Video Compression Standards
W. I^2C: Inter-Integrated Circuit
X. IEEE: Institute of Electrical and Electronics Engineers
Y. I/O: Input / Output
Z. IP: Internet Protocol
AA. IS: Integrated System
BB. JPEG: Joint Photographic Experts Group
CC. LAN: Local Area Network
DD. LDAP: Lightweight Directory Access Protocol
EE. MB: Megabyte
FF. MJPEG: Motion JPEG
GG. MSATA: Mini-Serial Advanced Technology Attachment
HH. MSP: Mobile Security Professional
II. MTBF: Mean-Time Between Failure
JJ. NAS: Network Attached Storage
KK. NAT: Network Address Translation
LL. NBAPI: NetBox Application Programming Interface

MM. NECA: National Electric Code Association
NN. NFPA: National Fire Protection Association
OO. NVR: Network Video Recorder
PP. ODBC: Open Database Connectivity
QQ. OS: Operating System
RR. OVID: Open Video Integration Driver
SS. PDF: Portable Document Format
TT. PIN: Personal Identification Number
UU. PIV: Personal Identity Verification
VV. PoE: Power over Ethernet
WW. PTZ: Pan-Tilt-Zoom
XX. RAID: Redundant Array of Independent Disks
YY. RAM: Random Access Memory
ZZ. REX: Request to Exit
AAA. RFID: Radio Frequency Identification
BBB. RoHS: Restriction of Hazardous Substances
CCC. ROM: Read Only Memory
DDD. RU: Rack Unit
EEE. SFTP: Secure File Transfer Protocol
FFF. SHA: Secure Hash Algorithm
GGG. SIO: Serial Input / Output
HHH. SLA: Sealed Lead-Acid
III. SMS: Security Management System or Short Message Service (text messaging)
JJJ. SSL: Secure Sockets Layer
KKK. SUSP: Software Upgrade and Support Plan
LLL. TCP: Transmission control protocol - connects hosts on the Internet
MMM. TIA: Telecommunications Industry Association
NNN. TLS: Transport Layer Security
OOO. TWIC: Transportation Worker Identification Credential
PPP. UI: User Interface
QQQ. UPS: Uninterruptible Power Supply
RRR. UTP: Unshielded Twisted Pair
SSS. VMS: Video Management System
TTT. WAN: Wide Area Network
UUU. Wi-Fi: Wireless Network
VVV. AS NECESSARY: Shall mean work which is required for completed construction, but is not necessarily shown or described in the Contract Documents.
WWW. AS REQUIRED: Shall mean work which is required for completed construction, but is not necessarily shown or described in the Contract Documents.
XXX. Substantial Completion: Shall mean that the project is sufficiently complete to be utilized for its intended use as stated in the body of this written specification.

YYY. Contractor/INTEGRATOR: Refers to the biding/installation Contractor responsible for furnishing and installation of all work indicated within this specification.

1.04 REFERENCE STANDARDS

A. 47 CFR 15 - Radio Frequency Devices; current edition.

B. NECA 1 - Standard for Good Workmanship in Electrical Construction; 2015.

C. NECA 303 - Standard for Installing Closed- Circuit Television (CCTV) Systems; 2005.

D. NFPA 70 - National Electrical Code; Most Recent Edition Adopted by Authority Having Jurisdiction, Including All Applicable Amendments and Supplements.

E. System shall be RoHS (Restriction of Hazardous Substances) compliant and meet proposed amendments to the reduction of toxic substances in manufacturing in stated in the Environmental Design of Electrical Equipment Act (EDEE).

F. Installation shall comply with NECA 1-2010 “Standard Practice of Good Workmanship in Electrical Construction”

G. Installation shall comply with NEC/NFPA 70E “Standard for Electrical Safety in the Workplace”

H. Electronic data exchange between Video Surveillance System and the Access Control System shall comply with SIA TVAC

I. Installation shall comply with FCC CFR 47 Part 15 Class A “Telecommunications, Radio, Frequency, Digital Device Emission:

J. Installation shall comply with Federal, State, and Local Codes and Authority Having Jurisdiction (AHJ).

K. Electrical Components, Devices, and Accessories: Listed and labeled as defined in NFPA 70, by a qualified testing agency, and marked for intended location and application.

1.05 ADMINISTRATIVE REQUIREMENTS

A. Coordination:
   1. Coordinate the placement of cameras with structural members, ductwork, piping, equipment, luminaires, diffusers, fire suppression system components, and other potential conflicts installed under other sections or by others.
   2. Coordinate the work with other installers to provide power for cameras and equipment at required locations.
   3. Notify Architect of any conflicts with or deviations from Contract Documents. Obtain direction before proceeding with work.

B. Preinstallation Meetings:
   1. Conduct meeting with facility representative to review camera and equipment locations and camera field of view objectives.
   2. Conduct meeting with facility representative and other related equipment manufacturers to discuss video surveillance system interface requirements.

C. Confidentiality of Documents
   1. The project documents, consisting of all technical proposals, drawings, specifications, shop drawings, as-built drawings, manufacturer’s literature, etc., shall be considered proprietary information and are to be treated with complete confidentiality. Dissemination of any security system documentation to any party not considered “need-to-know” without a pre-defined and approved agreement will be considered a violation of the contract documents and all pursuant clauses regarding financial penalties, project termination, and/or legal prosecution will apply. The Contractor is to obtain a list of “need-to-know” parties from the Owner and/or Construction Manager.
   2. Use of the Contract drawings and specifications is restricted to the original site for which they were prepared. Publication therefore is expressly limited to such use. Re-use, reproduction, storage by any medium or publication by any method in whole or in part is prohibited. Visual contact with the Contract drawings and specifications constitutes prima

facie evidence of the acceptance of these restrictions. Unlawful publication, dissemination, and use of these documents carry significant liability and the Owner maintains the right to legally pursue restitution and/or penalty for violation of these confidentiality conditions.

3. All documents marked “DO NOT DUPLICATE” are to be returned to the Construction Manager for proper disposal and handling upon completion of their relevant use.

1.06 SUBMITTALS

A. See Division 01 – Administrative Requirements for submittal procedures.

B. Evidence of Qualifications for Installer:
   1. The Contractor shall be a bona fide security systems contractor, licensed by the State of Rhode Island for the installation of the low voltage security and signal communication systems, and engaged in security system maintenance, service and contracting for at least the last five years.
   2. The Contractor shall employ technicians who have been trained by the Manufacturer specified within this section to install the systems of this Manufacturer.
   3. The contractor shall be a factory authorized stocking distributor of the manufacturer of the equipment included in the system so that immediate replacement parts can be made from inventory and service provided as needed on an emergency basis.
   4. The Contractor shall submit with the bid a manufacturer’s certificate of acceptance of the qualifications of the Installing Contractor to install, test, maintain and repair the manufacturer’s equipment.
   5. In order for the Security Consultant to verify that they meet the competency requirements of this specification, Contractors must submit the following information if so requested:
      a. Proof that the Contractor has installed, services and maintained similar security systems for a minimum of ten (10) years.
      b. Proof that the Contractor is a firm which currently and regularly installs, services and maintains security systems as a full time business.
      c. The names and qualifications of security system technicians that shall perform and supervise the work, and perform tests or adjustments on the systems and equipment. Qualifications shall include all schooling, training, and history of work experience.
      d. A list of four prior systems comparable to the one specified under this contract which were installed, serviced, and maintained satisfactorily by the Contractor for a minimum of one (1) year. Each system listed shall include the firm or owner, location, person to contact (with telephone number), date of installation and service period, and a brief description of the system and work performed on the system.
   6. The Contractor shall submit any other information required by the Security Consultant to determine the competency of the Contractor. If this information is not submitted as requested, it shall be submitted within the time specified by the Architect after the bid opening. If the Contractor fails to submit the information in accordance with the Security Consultant’s request, the Contractor shall be declared non-responsive, and may be rejected to perform the work specified within this section.

C. Manufacturer’s Installation Instructions: Indicate application conditions and limitations of use stipulated by product testing agency. Include instruction for storage, handling, protection, examination, preparation, installation, and operation of product.

D. Manufacturer’s detailed field-testing procedures.

E. Maintenance contracts.

F. Product Data: Provide details and technical specifications for each product indicated. Include physical dimensions, features, performance, electrical characteristics, ratings, software versions, and operating system details.

G. Shop Drawings:
   1. General: General: Bid documents, including drawings, details and specifications are considered conceptual in nature, and provide direction on products and project requirements. Contractor is given a choice of methods that may be incorporated into the

system. These choices may affect the overall design, configuration and installation of the proposed system.

2. Contractor Responsibility: Prepare and submit shop drawings, rendered in the latest AutoCAD DWG file format, which show details of all work to ensure proper installation of the work using those materials and equipment specified or allowed under the approved plans and specifications. A complete Shop Drawing submittal drawing package shall consist of Drawings, Equipment Data Sheet Submittals, and an Acceptance Testing Plan.
3. Completeness: The Equipment Submittals, Acceptance Testing Plan, and the Shop Drawings should be submitted as a complete and contiguous package. Partial or unmarked submittals will not be accepted for review.
4. Scheduling: A schedule of shop drawing submissions shall be submitted for the Architect and Owner's Representative review on a form acceptable to the Architect within ten (10) days after award of the Contract. The schedule of shop drawing submissions shall include as a minimum, but not limited to the requirements stated herein.
   a. Shop Drawings: Shop Drawings shall be numbered consecutively and shall accurately and distinctly present the following information:
      1) Title Sheet
      2) Floor Plans: Showing devices, pull boxes, cabinets, conduits and conductors in their proposed locations with device numbering scheme.
      3) Riser Diagram: Showing all conduit relationships between devices shown on the Floor Plans. Show all power sources.
      4) Single-Line/Block Diagrams: Show signal relationships of controls and devices within the system.
      5) Custom Assembly Diagrams: For each custom assembly such as Access Control Terminal Cabinets, receptacle assemblies, or door control panels, provide an assembly drawing illustrating the appearance of the assembled device. Include dimensions, assembly components, and functional attributes (momentary or alternate action switch, lens color, panel finish)
      6) Component Connection Diagrams
         (a) For each equipment component such as a computer, video switcher, camera or video recorder, show the rear elevation of the device and all connectors/terminations as a pictorial.
         (b) Show the wire designations on connectors. Typical wiring detail where multiple of same device is provided.
         (c) Show a schedule of the wire colors connected to the pins on each device connector.
   b. Equipment Submittals
      1) Provide a Title Page, with project name, Contractor's name and address, contact information, date of submission, and submission revision number.
      2) Provide a Parts List, for proposed equipment, materials, components and devices, listing the following information for each line item:
         (a) The system type
         (b) Model number
         (c) Specification sheet page reference
      3) Provide Manufacturers Specification Sheet with descriptive information for equipment, materials, components and devices. Number each page, to correspond with the Parts List.
      4) Clearly delineate (with highlighter, arrow, or underline) on each specification sheet, specific model numbers, options and configurations being proposed for this project.
      5) Indicate kinds of materials and finishes for equipment where more than one option is presented.
   c. Acceptance Testing Plan

1) Submit a written document detailing the test procedures to be followed in evaluating and proving the installed system(s).
2) Provide a sample of the test forms to be used for each system and for each component of each system.
3) Include all tests required by the equipment manufacturer and by this Specification

d. Incomplete or unchecked submittals which do not contain complete data on the work and full information on related matters will be returned for correction.

e. Verification: The contractor shall check and acknowledge all shop drawings and shall place his signature on all shop drawings submitted for approval. Contractor's signature shall constitute a representation that all quantities, dimensions, field construction criteria, materials, catalog numbers, performance criteria and similar data have been verified and that, in his opinion, the submittal fully meets the requirements of the Contract Documents.

f. Timeliness: The Contractor shall schedule, prepare and submit a complete shop drawing assembly in accordance with a time-table that will allow his suppliers and manufacturers sufficient time to fabricate, manufacture, inspect test and deliver their respective products to the project site in a timely manner so as to not delay the complete performance of the work.

g. Departure from Contract Requirements: If shop drawings show departures from the Contract requirements, the Contractor shall make specific mention thereof in his letter of transmittal, otherwise review of such submittals shall not constitute review of the departure. Review of the drawings shall constitute review of the specific subject matter for which the drawings were submitted and not of any other structure, materials, equipment, or apparatus shown on the drawings.

h. Contractor Responsibility: The review of shop drawings will be general and shall not relieve the Contractor of responsibility for the accuracy of such drawings, nor for the proper fitting and construction of the work, nor for the furnishing of materials or work required by the Contract. No construction called for by shop drawings shall be initiated until such drawings have been reviewed and approved.

i. Shop Drawing Submittal Review: The procedure in seeking review of the shop drawings shall be as follows:
1) The Contractor shall submit four (4) complete sets and/or electronic PDFs of shop drawings with equipment submittals and other descriptive data with one copy of a letter of transmittal to the Architect for review thirty (30) working days after award of the contract. The letter of transmittal shall contain the project name, Architect’s Project Number, the name of the Contractor, the list of drawings submitted including numbers and titles, requests for any review of departures from the contract requirements and any other pertinent information. Drawings submitted for review shall be full-sized and included with the equipment submittals.
2) Drawings or descriptive data will be stamped "Reviewed", "Furnish as Corrected", "Revise and Resubmit", "Rejected" or ‘Submit Specific Item’ and one copy with a Letter of Transmittal will be transmitted to the Contractor with the return of submitted documents.
3) If a shop drawing or data is stamped "Reviewed" or "Furnish as Corrected", no additional submittal is required for that shop drawing.
4) If a shop drawing or data is stamped "Revise and Resubmit" or “Rejected”, the Contractor shall make the necessary corrections and resubmit the documents as required above. The letter transmitting corrected documents shall indicate that the documents are re-submittals.
5) The Contractor shall revise and resubmit the shop drawing as required, until they are stamped either "Reviewed" or "Furnish as Corrected."

H. Equipment and Software List: Include every piece of equipment and software by product/model name and/or number, manufacturer, serial number, revision number, location, and date of

original installation. If factory and/or bench testing regimens are required by the project plan, add pretesting record of each piece of equipment and software, listing name of person testing, date of test, and adjustments made.

I. CE and FCC Compliance Certificates:

J. Field quality-control reports

K. Current Specified Manufacturer Integrator Certification Letter

L. Current Specified Manufacturer Training Certificates (listing expiration dates) for Two technicians from the supporting office

M. Warranty: Software support and warranty information for all components, including Service Level Agreement (SLA) details, and duration of agreement from date of system acceptance by Owner. Submit sample of manufacturer's warranty and documentation of final executed warranty completed in Owner's name and registered with manufacturer.

N. Project Record Documents: Record actual locations of system components and installed wiring arrangements and routing.

O. Operation and Maintenance Data: Include detailed information on system operation, equipment programming and setup, replacement parts, and recommended maintenance procedures and intervals.
   1. Include contact information for entity that will be providing contract maintenance and trouble call-back service.
   2. General: The Contractor is responsible for providing accurate drawings and equipment manuals describing and depicting the systems as they are actually installed and operated.
   3. Phase One: Notwithstanding requirements specified elsewhere, submit the following labeled as the "Operating and Maintenance Manual" within thirty (30) days after Final Acceptance of the Installation:
      a. Record Drawings: Submit two (2) copies of revised versions of drawings as submitted in the "Shop and Field" and "Equipment Wiring Diagrams" Submittals showing actual device locations, conduit routing, wiring and relationships as they were constructed. Include nomenclature showing as-built wire designations and colors. Drawings shall include room numbers coinciding with Owner space planning numbering. Drawings shall be submitted in electronic editable AutoCAD files, in ".dwg" format, on CD or DVD disks.
      b. Manuals: Submit two (2) copies of each of the following materials in bound manuals, or electronic PDF copies on CD/DVD discs, with labeled dividers:
         1) A final Bill of Material for each system.
         2) Equipment Instruction Manuals: Complete, project specific comprehensive instructions for the operation of devices and equipment provided as part of this work.
         3) Manufacturers Instruction Manuals: Specification sheets, brochures, Operation Manuals and service sheets published by the manufacturers of the components, devices and equipment provided.
         4) Include information for testing, repair, troubleshooting, assembly, disassembly and recommended maintenance intervals.
         5) Provide a replacement parts list with current prices. Include list of recommended spare parts, tools, and instruments for testing and maintenance purpose.
         6) Performance, Test and Adjustment Data: Comprehensive documentation of performance verification according to parameters specified herein.
         7) Warranties: Provide an executed copy of the Warranty Agreement and copies of all manufacturers' Warranty Registration papers as described herein.

1.07 QUALITY ASSURANCE

A. Comply with the following:
   1. NFPA 70.
   2. Applicable TIA/EIA standards.

B. Maintain at the project site a copy of each referenced document that prescribes execution requirements.

C. Manufacturer Qualifications: Company specializing in manufacturing the products specified in this section with minimum three years documented experience.

D. Installer Qualifications: Company specializing in performing the work of this section with minimum three years documented experience with video surveillance systems of similar size, type, and complexity and providing contract maintenance service as a regular part of their business; authorized manufacturer's representative.
   1. Contract maintenance office located within 100 miles (160 km) of project site.

E. Maintenance Contractor Qualifications: Same entity as installer.

F. Product Listing Organization Qualifications: An organization recognized by OSHA as a Nationally Recognized Testing Laboratory (NRTL) and acceptable to authorities having jurisdiction.

G. The requirements of the State Building Code and local regulations establish the minimum acceptable quality of workmanship and materials, and all work shall conform thereto unless more stringent requirements are indicated or specified herein.

H. All work shall comply with the latest editions of the codes as referenced herein.

I. Follow manufacturer's directions for articles furnished, in addition to directions shown on drawings or specified herein.

J. Protect all work, materials, and equipment from damage during process of work. Replace all damaged or defective work, materials and equipment without additional cost to the Owner.

K. All equipment and materials for permanent installation shall be the products of recognized manufacturers and shall be new.

L. Equipment and materials shall:
   1. Where normally subject to Underwriters Laboratory Inc. listing or labeling services, be so listed or labeled.
   2. Be without blemish or defect.
   3. Not be used for temporary purposes.
   4. Be in accordance with the latest applicable NEMA standards.
   5. Be products which will meet with the acceptance of all authorities having jurisdiction over the work. Where such acceptance is contingent upon having the products examined, tested and certified by Underwriters or another recognized testing laboratory, the product shall be so examined, tested and certified.

M. Except for conduit, conduit fittings, outlet boxes, wire and cable, all items of equipment or material of one generic type shall be the product of one manufacturer throughout.

N. For items which are to be installed but not purchased as part of the electrical work, the electrical work shall include:
   1. The coordination of their delivery.
   2. Their unloading from delivery trucks driven into any point on the property line at grade level.
   3. Their safe handling and field storage up to the time of permanent placement in the project.
   4. The correction of any damage, defacement or corrosion to which they may have been subjected. Replacement, if necessary, shall be coordinated with Contractor who originally purchased the item.
   5. Their field make up and internal wiring as may be necessary for their proper operation.
   6. Their mounting in place including the purchase and installation of all dunnage, supporting members, and fastenings necessary to adapt them to architectural and structural conditions.
   7. Their connection to building wiring including the purchase and installation of all termination junction boxes necessary to adapt and connect them to this wiring. Included also shall be the purchase and installation of any substitute lugs or other wiring terminations as may be

necessary to adapt their terminals to the building wiring as called for and to the connection methods set forth in these specifications.

O. Items which are to be installed but not purchased as part of the electric work shall be carefully examined upon delivery to the project. Claims that any of these items have been received in such condition that their installation will require procedures beyond the reasonable scope of the electric work will be considered only if presented in writing within one week of the date of delivery to the project of the items in question. The work includes all procedures, regardless of how extensive, necessary to put into satisfactory operation, all items for which no claims have been submitted as outlined above.

P. Seismic Performance: Provide equipment capable of withstanding the effects of earthquake motions determined according to ASCE/SEI 7 and current building codes for the state of RI.
   1. The term “withstand” means “the system(s) will remain in place without separation of any parts when subjected to the seismic forces specified and the system will be fully operational after the seismic event.”

1.08 PROJECT CONDITIONS

A. Environmental Conditions: Capable of withstanding the following environmental conditions without mechanical or electrical damage or degradation of operating capability:
   1. Interior, Controlled Environment: System components installed in temperature-controlled interior environments shall be rated for continuous operation in ambient temperatures of 36 to 122 deg F (2 to 50 deg C) dry bulb and twenty to ninety percent (20-90%) relative humidity, noncondensing. Use NEMA 250, Type 1 enclosures.
   2. Interior, Uncontrolled Environment: System components installed in non- temperature-controlled interior environments shall be rated for continuous operation in ambient temperatures of 0 to 122 deg F (minus 18 to plus 50 deg C) dry bulb and twenty to ninety percent (20-90%) relative humidity, noncondensing. Use NEMA 250, Type 3R enclosures.
   3. Exterior Environment: System components installed in locations exposed to weather shall be rated for continuous operation in ambient temperatures of minus 30 to plus 122 deg F (minus 34 to plus 50 deg C) dry bulb and twenty to ninety percent (20-90%) relative humidity, condensing. Rate for continuous operation when exposed to rain as specified in NEMA 250, winds up to 85 mph and snow cover up to 24 inches thick. Use sufficiently rated NEMA 250 enclosures.
   4. Hazardous Environment: System components located in areas where fire or explosion hazards may exist because of flammable gases or vapors, flammable liquids, combustible dust, or ignitable fibers shall be rated, listed, and installed according to NFPA 70.
   5. Corrosive Environment: System components subject to corrosive fumes, vapors, and wind-driven salt spray in coastal zones. Use sufficiently rated NEMA 250 enclosures.
   6. Security Environment: Camera housing for use in high-risk areas where surveillance equipment may be subject to physical violence.

1.09 DELIVERY, STORAGE, AND HANDLING

A. Receive, inspect, handle, and store products in accordance with manufacturer's instructions and NECA 303.

B. Store products in manufacturer's unopened packaging, keep dry and protect from damage until ready for installation.

1.10 FIELD CONDITIONS

A. Maintain field conditions within manufacturer's required service conditions during and after installation.

1.11 WARRANTY

A. See Division 01 – Closeout Submittals for additional warranty requirements.

B. The Integrator guarantees the Systems to be installed under this specification to be free from any defects in workmanship and materials for a period of one (1) year from the date of final completion/acceptance of the project by the Owner as evidenced by the date of final payment

for the work. The Contractor shall promptly and at their own expense remedy any defects in the work and pay for any damage to other work resulting thereof, which shall appear during the period of time covered by this guarantee. Neither the final certificate of payment nor any provisions in this Agreement shall constitute an acceptance of work not done in accordance with this specification or relieve the Contractor of liability with respect to any expressed warranties or guarantees or responsibility for faulty materials or workmanship.

C. Special Warranty: Manufacturer's standard form in which manufacturer agrees to repair or replace components of equipment related to the Access Control System, and control-station equipment that fail in materials or workmanship within specified warranty period.
   1. Warranty Period: The standard manufacturer’s warranty shall apply or a minimum of a one (1) year warranty from the date of Substantial Completion.

D. The Integrator shall provide all services required to maintain the system in an operational state as specified by the manufacturer for a period of one (1) year after acceptance.

E. Service response shall be within twelve (12) hours of the initial request for service and shall be provided twenty-four (24) hours per day, seven (7) days per week and three hundred sixty-five (365) days per year.

F. Contractor shall include, as part of this warranty, a program for maintenance for each integrated system.
   1. Provide details of coverage, preventive maintenance schedules, exclusions and service rates for all billable time and travel charges.
   2. Maintenance shall include two (2) semi-annual inspections and tests to verify the intended operation of the security system(s). System testing shall include but not be limited to the testing of all devises, fault modes and batteries. A detailed test report indicating these results and any corrective measures shall be furnished to the owner.

G. The Contractor shall provide software and firmware upgrades as required and available to the Owner.

H. Submit manufacturer's standard warranties.

PART 2 PRODUCTS

2.01 CAMERAS:

A. Camera Manufacturer: AXIS Communications

B. Camera Model Numbers: Refer to Camera Schedule on Drawings

PART 3 EXECUTION

3.01 EXAMINATION

A. Verify that field measurements are as indicated.

B. Verify that ratings and configurations of system components are consisted with the indicated requirements.

C. Verify that mounting surfaces are ready to receive the system components.

D. Verify that branch circuit wiring is installed, completed, tested, and ready for connection to system.

E. Verify that conditions are satisfactory prior to starting work.

F. Device Locations
   1. All device locations are to be field verified with the Owner prior to start of project. Architectural drawings are for approximation purposes only. Additional charges will not be allowed for outlet installation in areas not reviewed or approved by the Owner.

G. Examine pathway elements intended for cables. Check raceways and other elements for compliance with space allocations, installation tolerance, hazards to camera installation, and other conditions affecting installation.

H. Proceed with installation only after unsatisfactory conditions have been corrected.

3.02 INSTALLATION

A. Install Video Surveillance system in accordance with NECA 1 (general workmanship).

B. Install products in accordance with manufacturer's instructions.

C. Install cameras level and plumb.

D. Install cameras with 84-inch minimum clear space below cameras and their mountings. Change type of mounting to achieve required clearance.

E. Set pan unit and pan-and-tilt unit stops to suit final camera position and to obtain the field of view required for camera. Connect all controls and alarms and adjust.

F. Install power supplies and other auxiliary components within the Telecommunication Room unless otherwise indicated.

G. Install tamper switches on components indicated to receive tamper switches, arranged to detect unauthorized entry into system-component enclosures and mounted in self-protected, inconspicuous positions.

H. Identify system components, wiring, cabling, and terminals according to industry standards.

I. Unless otherwise indicated, use wiring in conduit.
   1. Use suitable listed cables in we locations, including underground raceways.
   2. Use suitable listed cables for vertical wire applications.
   3. All cabling shall be plenum rated.
   4. Install wiring in conduit for the following:
      a. Where required for rough-in.
      b. Where required by the AHJ.
      c. Where exposed to damage.
      d. Where installed outside the building.
      e. For exposed connections from outlet boxes to devices.
   5. Conduit: comply with Division 26
   6. Conceal cables unless specifically indicated to be exposed.
   7. User power transfer hinges specified within Division 08 for concealed connections to door hardware.
   8. Cables in the following areas may be exposed:
      a. Equipment Closets
   9. Route exposed cables in parallel or perpendicular to building structural members and surfaces.
   10. Do not exceed manufacturer's recommended maximum cable length between components.

J. Provide grounding and bonding in accordance with Division 26.

K. Install firestopping to preserve the fire resistance rating of partitions and other elements, using materials and methods specified in Division 07.

L. Install power supplies and other auxiliary components at control stations unless otherwise indicated.

M. Identify system components, wiring, cabling, and terminals according to ANSI/EIA/TIA standards.

N. Security System Integration
   1. The Contractor shall be responsible for providing hardware and software interfaces to achieve the specified system performance described herein and, by reference, realize absolute and seamless compatibility with the related component systems.
   2. The Contractor shall ensure system additions and modifications provided under this scope of work have no negative effect on the individual components and systems, and their core functionality, and no permanent effect beyond that specified or implied by the scope of work.

3. Purpose
   a. Integration is the process of designing, deploying, and configuring independently operating systems with the ability to request, receive, extract, process, and act upon information from other systems.
   b. Successful system integration must address three fundamental issues:
      1) Functionality: What information is needed, how it is to be requested and processed, and what functions or activities need to occur upon receipt of the information.
      2) Connectivity: How systems will be connected to support the communication of information and commands. (Special interfaces, wiring, networks, databases.)
      3) Communication: How information will be communicated between systems. (Instruction sets, language, protocols, formats, priority.)
4. Environment
   a. Integration components shall generally comprise special elements of independent subsystems, and shall be located within, or in close proximity to, the processing components of each independent subsystem. Where subsystems require special hardware or communications interfaces to support integration, the special hardware should be located near the independent subsystem processing components or network appliance, based on the manufacturers' recommendation. See the drawings for details on mounting locations.

3.03 FIELD QUALITY CONTROL

A. Testing Agency: The Contractor shall engage a qualified testing agency to perform tests and inspections with the Owner and appointed project manager.

B. Manufacturer's Field Service: Engage a factory-authorized service representative to inspect, test, and adjust components, assemblies, and equipment installations, including connections.

C. Camera Field Verification:
   1. All camera locations MUST to be field verified with the Owner prior to start of project. Architectural drawings are for approximation purposes only. Additional charges will not be allowed for installation in areas not reviewed or approved by the Owner.
   2. Camera images will be reviewed with the Owner and the Security Consultant. The contractor shall plan for three adjustments of the camera's field of view as follows:
      a. Initial setup and testing
      b. Owner and / or Security Consultant adjustments #1
      c. Owner and / or Security Consultant adjustments #2

D. Perform tests and inspections.
   1. Manufacturer's Field Service: Engage a factory-authorized service representative to inspect components, assemblies, and equipment installations, including connections, and to assist in testing.

E. Tests and Inspections:
   1. Inspection: Verify that units and controls are properly installed, connected, and labeled, and that interconnecting wires and terminals are identified.
   2. Pretesting: Align and adjust system and pretest components, wiring, and functions to verify that they comply with specified requirements. Conduct tests at varying lighting levels, including day and night scenes as applicable. Prepare video-surveillance equipment for acceptance and operational testing as follows:
      a. Prepare equipment list described in "Submittals" Article.
      b. Verify operation of auto-iris lenses.
      c. Set back-focus of fixed focal length lenses. At focus set to infinity, simulate nighttime lighting conditions by using a dark glass filter of a density that produces a clear image. Adjust until image is in focus with and without the filter.
      d. Set back-focus of zoom lenses. At focus set to infinity, simulate nighttime lighting conditions by using a dark glass filter of a density that produces a clear image.

Additionally, set zoom to full wide angle and aim camera at an object 50 to 75 feet away. Adjust until image is in focus from full wide angle to full telephoto, with the filter in place.

e. Set and name all preset positions; consult Owner's personnel.
f. Set sensitivity of motion detection.
g. Connect and verify responses to alarms.
h. Verify operation of control-station equipment.

3. Test Schedule: Schedule tests after pretesting has been successfully completed and system has been in normal functional operation for at least fourteen (14) days. Provide a minimum of ten (10) days notice of test schedule.
4. Operational Tests: Perform operational system tests to verify that system complies with Specifications. Include all modes of system operation. Test equipment for proper operation in all functional modes.

F. Prepare test and inspection reports.

G. Occupancy Adjustments: When requested within twelve (12) months of date of Substantial Completion, provide on-site assistance in adjusting system to suit actual occupied conditions. Provide up to two (2) visits to this Project location during other-than-normal occupancy hours for this purpose. Tasks shall include, but are not limited to, the following:
1. Check cable connections.
2. Check proper operation of cameras and lenses. Verify operation of auto-iris lenses and adjust back-focus as needed.
3. Adjust all preset positions; consult Owner's personnel.
4. Recommend changes to cameras, lenses, and associated equipment to improve Owner's use of video surveillance system.
5. Provide a written report of adjustments and recommendations

3.04 CLEANING

A. Clean installed items using methods and materials recommended in writing by manufacturer.

B. Clean video-surveillance-system components, including camera-housing windows, lenses, and monitor screens before installation and prior to final acceptance.

C. Remove rubbish and debris: Installation contractor is not allowed you use the onsite dumpster and is responsible to discard their own debris off site.

3.05 CLOSEOUT ACTIVITIES

A. See Division 01 – Closeout Submittals for Closeout Submittals.

3.06 PROTECTION

A. Protect installed system components from subsequent construction operations.

3.07 MAINTENANCE

A. See Division 01 – Execution and Closeout Requirements for additional requirements relating to maintenance service.

B. Adjustments:
1. Occupancy Adjustments: When requested within twelve (12) months of date of Substantial Completion, provide on-site assistance in adjusting system to suit actual occupied conditions. Provide up to two (2) visits to Project during other-than-normal occupancy hours for this purpose. Tasks shall include, but are not limited to, the following:
a. Check cable connections.
b. Check proper operation of video surveillance devices.
c. Provide a written report of adjustments and recommendations.

C. Provide to Owner, at no extra cost, a separate maintenance contract for the service and maintenance of the Access Control System for One Year from date of Substantial Completion. Include a separate description of preventative maintenance, systematic examination, cleaning, inspection, and testing, with a detailed schedule.

D. Conduct site visit at least once every three months to perform inspection, testing, and preventative maintenance. Submit report to Owner indicating maintenance performed along with evaluations and recommendations.

E. Provide trouble call-back service upon notification by Owner:
   1. Include allowance for call-back service during normal working hours at no extra cost to Owner.
   2. Owner will pay for call-back service outside of normal working hours on an hourly basis, based on actual time spent at the site and not including travel time; include hourly rate and definition of normal working hours in maintenance contract.

END OF SECTION

DIVISION 31

SECTION 31 10 00 - SITE CLEARING

PART 1 - GENERAL

1.1 RELATED DOCUMENTS

A. Drawings and general provisions of the Contract, including General and Supplementary Conditions and Division 01 Specification Sections, apply to this Section.

A. Rhode Island Department of Transportation Standard Specifications for Roads and Bridge Construction amended February 2024.

B. Rhode Island Soil Erosion and Sediment Control Handbook last revised 2016

1.2 SUMMARY

A. Section Includes:

1. Protecting existing vegetation to remain.
2. Removing existing vegetation.
3. Clearing and grubbing.
4. Stripping and stockpiling topsoil.
5. Removing above- and below-grade site improvements.
6. Disconnecting, capping or sealing, and removing site utilities.
7. Removing debris and rubbish.

B. Related Sections:
1. Section 312100 “Earthwork”.
2. Section 312500 “Sedimentation and Erosion Control”.

1.3 DEFINITIONS

A. Subsoil: All soil beneath the topsoil layer of the soil profile, and typified by the lack of organic matter and soil organisms.

B. Surface Soil: Soil that is present at the top layer of the existing soil profile at the Project site. In undisturbed areas, the surface soil is typically topsoil; but in disturbed areas such as urban environments, the surface soil can be subsoil.

C. Topsoil: Top layer of the soil profile consisting of existing native surface topsoil or existing in-place surface soil and is the zone where plant roots grow. Its appearance is generally friable, pervious, and black or a darker shade of brown, gray, or red than underlying subsoil; reasonably free of subsoil, clay lumps, gravel, and other objects more than 2 inches in diameter; and free of subsoil and weeds, roots, toxic materials, or other nonsoil materials.

D. Plant-Protection Zone: Area surrounding individual trees, groups of trees, shrubs, or other vegetation to be protected during construction, and indicated on Drawings.

E. Tree-Protection Zone: Area surrounding individual trees or groups of trees to be protected during construction, and defined by a circle concentric with each tree with a diameter of 20 times the trunk diameter at breast height unless otherwise indicated.

F. Vegetation: Trees, shrubs, groundcovers, grass, and other plants.

1.4 MATERIAL OWNERSHIP

A. Except for stripped topsoil and other materials indicated to be stockpiled or otherwise remain Owner's property, cleared materials shall become Contractor's property and shall be removed from Project site.

1.5 SUBMITTALS

A. Existing Conditions: Documentation of existing trees and plantings, adjoining construction, and site improvements that establishes preconstruction conditions that might be misconstrued as damage caused by site clearing.

1. Use sufficiently detailed photographs or videotape.
2. Include plans and notations to indicate specific wounds and damage conditions of each tree or other plants designated to remain.

B. Record Drawings: Identifying and accurately showing locations of capped utilities and other subsurface structural, electrical, and mechanical conditions.

1.6 QUALITY ASSURANCE

A. Preinstallation Conference: Conduct conference at Project site.

1.7 PROJECT CONDITIONS

A. Traffic: Minimize interference with adjoining roads, streets, walks, and other adjacent occupied or used facilities during site-clearing operations.

1. Do not close or obstruct streets, walks, or other adjacent occupied or used facilities without permission from Owner and authorities having jurisdiction.
2. Provide alternate routes around closed or obstructed traffic ways if required by Owner or authorities having jurisdiction.

B. Improvements on Adjoining Property: Authority for performing site clearing indicated on property adjoining Owner's property will be obtained by Owner before award of Contract.

1. Do not proceed with work on adjoining property until directed by Architect.

C. Salvable Improvements: Carefully remove items indicated to be salvaged and store on Owner's premises where indicated.

D. Utility Locator Service: Notify Call Before You Dig, 1.800.922.4455 at 72 hours prior to beginning work. Also notify a private mark out service company, for area where Project is located before conducting site clearing.

E. Do not commence site clearing operations until temporary erosion- and sedimentation-control and plant-protection measures are in place.

F. The following practices are prohibited within protection zones:

1. Storage of construction materials, debris, or excavated material.
2. Parking vehicles or equipment.
3. Foot traffic.
4. Erection of sheds or structures.
5. Impoundment of water.
6. Excavation or other digging unless otherwise indicated.
7. Attachment of signs to or wrapping materials around trees or plants unless otherwise indicated.

G. Environmentally impacted soils and debris: Notify Owner and Owner's representative should suspect environmentally impacted soils or materials be encountered. Do not proceed with disturbance of impacted soils or materials until directed by Owner or Owner's Environmental Consultant.

H. Do not direct vehicle or equipment exhaust towards protection zones.

I. Prohibit heat sources, flames, ignition sources, and smoking within or near protection zones.

J. Soil Stripping, Handling, and Stockpiling: Perform only when the topsoil is dry or slightly moist.

K. Construct temporary erosion control systems as required to protect adjacent properties and water resources from erosion and sedimentation in conformance with related sections on erosion control, slope protection, and pollution control.

L. Protect existing structures and improvements that are not to be removed. Protect and maintain benchmarks and survey control points from disturbance during site clearing and construction.

PART 2 - PRODUCTS

2.1 MATERIALS

A. Satisfactory Soil Material: Requirements for satisfactory soil material are specified in Division 31 Section "Earthwork."

1. Obtain approved borrow soil material off-site when satisfactory soil material is not available on-site.

B. Antirust Coating: Fast-curing, lead- and chromate-free, self-curing, universal modified-alkyd primer complying with MPI #79, Alkyd Anticorrosive Metal Primer.

1. Use coating with a VOC content of 420 g/L or less when calculated according to 40 CFR 59, Subpart D (EPA Method 24).

PART 3 - EXECUTION

3.1 PREPARATION

A. Protect and maintain benchmarks and survey control points from disturbance during construction.

B. Locate and clearly identify trees, shrubs, and other vegetation to remain. Flag each tree trunk at 54 inches above the ground.

C. Protect existing site improvements to remain from damage during construction.

1. Restore damaged improvements to their original condition, as acceptable to Owner.

D. Provide traffic control as required, in accordance with Section 015526 “Traffic Control”.

3.2 TEMPORARY EROSION AND SEDIMENTATION CONTROL

A. Provide temporary erosion- and sedimentation-control measures to prevent soil erosion and discharge of soil-bearing water runoff or airborne dust to adjacent properties and walkways, according to erosion- and sedimentation-control Drawings and Sedimentation and Erosion Control Specification Section 312500, and requirements of authorities having jurisdiction.

B. Verify that flows of water redirected from construction areas or generated by construction activity do not enter or cross protection zones.

C. Inspect, maintain, and repair erosion- and sedimentation-control measures during construction until permanent vegetation has been established, and the contributing subwater shed is stable.

D. Remove erosion and sedimentation controls and restore and stabilize areas disturbed during removal.

E. The temporary erosion and sediment control must be completed in accordance with the General Permit for discharge of stormwater and dewatering wastewaters from construction activities, and the erosion and sediment control plan prepared for this project.

3.3 TREE AND PLANT PROTECTION

A. General: Protect trees and plants remaining on-site according to requirements indicated on Contract Drawings.

B. Repair or replace trees, shrubs, and other vegetation indicated to remain or be relocated that are damaged by construction operations, in a manner approved by Architect.

3.4 EXISTING UTILITIES

A. Owner will coordinate with Contractor regarding disconnecting and sealing indicated utilities that serve existing structures prior to site clearing, or prior to site improvement construction when requested by Contractor.

1. Verify that utilities have been disconnected and capped before proceeding with site clearing.

B. Locate, identify, disconnect, and seal or cap utilities indicated to be removed.

1. Arrange with utility companies to shut off indicated utilities with notification in writing to the Owner.

C. Locate, identify, and disconnect utilities indicated to be abandoned in place.

D. Interrupting Existing Utilities: Do not interrupt utilities serving facilities occupied by Owner or others unless permitted under the following conditions and then only after arranging to provide temporary utility services according to requirements indicated:

1. Notify Architect/Engineer not less than two days in advance of proposed utility interruptions.
2. Do not proceed with utility interruptions without Architect's/Engineer's and Owner's written permission.

E. Excavate for and remove underground utilities indicated to be removed. Backfill utility trenches to protect utilities to remain or improvements to remain. Provide backfill and compaction in locations subject to future improvement construction and filling for future improvements.

3.5 CLEARING AND GRUBBING

A. Remove obstructions, trees, shrubs, and other vegetation to permit installation of new construction. Burning of trees, shrubs, and other vegetation is not permitted.

1. Do not remove trees, shrubs, and other vegetation indicated to remain or to be relocated.
2. Remove stumps, roots, obstructions within limits of the project.
3. Use only hand methods for grubbing within protection zones.
4. Chip removed tree branches and dispose of off-site.

B. Fill depressions caused by clearing and grubbing operations with satisfactory soil material unless further excavation or earthwork is indicated.

1. Place fill material in horizontal layers not exceeding a loose depth of 8 inches, and compact each layer to a density equal to adjacent original ground.

3.6 TOPSOIL STRIPPING

A. Remove sod and grass before stripping topsoil.

B. Strip topsoil to depth of a minimum of 6 inches or identified in the geotechnical report in a manner to prevent intermingling with underlying subsoil or other waste materials.

1. Remove subsoil and nonsoil materials from topsoil, including clay lumps, gravel, and other objects more than 2 inches in diameter; trash, debris, weeds, roots, and other waste materials.

C. Stockpile topsoil away from edge of excavations without intermixing with subsoil. Grade and shape stockpiles to drain surface water. Cover to prevent windblown dust and erosion by water.

1. Limit height of topsoil stockpiles to 35 feet.
2. Do not stockpile topsoil within protection zones.
3. Dispose of surplus topsoil. Surplus topsoil is that which exceeds quantity to be reused.

4. Stockpile surplus topsoil to allow for respreading deeper topsoil.

3.7 SITE IMPROVEMENTS

A. Remove existing above- and below-grade improvements as indicated and necessary to facilitate new construction.

B. Remove slabs, sidewalks, paving (except asphalt pavement and base removal), curbs, gutters, and aggregate base as indicated.

1. Unless existing full-depth joints coincide with line of demolition, neatly saw-cut along line of existing pavement to remain before removing adjacent existing pavement. Saw-cut faces vertically.
2. Paint cut ends of steel reinforcement in concrete to remain with two coats of antirust coating, following coating manufacturer's written instructions. Keep paint off surfaces that will remain exposed.

3.8 DISPOSAL OF SURPLUS AND WASTE MATERIALS

A. Remove surplus soil or topsoil material, unsuitable topsoil, obstructions, demolished materials, and waste materials including trash and debris, and legally dispose of them off Owner's property. Burning is NOT permitted.

B. Separate recyclable materials produced during site clearing from other nonrecyclable materials. Store or stockpile without intermixing with other materials and transport them to recycling facilities. Do not interfere with other Project work.

3.9 CLEAN-UP

A. All paved areas being used by construction equipment and hauling operations shall be kept clean, free from mud and debris.

B. Do not burn, bury, landfill, or leave removed vegetation on site except as indicated. Chip, grind, crush or shred vegetation for mulching, composting or other purposes. Preference should be given to on-site uses. Remove excess from site as directed by Owner.

C. Restoration: If vegetation outside removal limits or within specified protective fences is damaged or destroyed due to subsequent construction operations, replace at no cost to Owner.

D. Upon completion of the Work, all surplus materials, debris, tools, and equipment shall be removed from the site.

END OF SECTION 311000

SECTION 31 21 00 – EARTHWORK

PART 1 - GENERAL

1.1 RELATED DOCUMENTS

A. Drawings and general provisions of the Contract, including General and Supplementary Conditions and Division 01 Specification Sections, apply to this Section.

B. Rhode Island Department of Transportation Standard Specifications for Roads and Bridge Construction amended to February 2024.

C. Section 221113 Facility Water Distribution Piping

D. Section 311000 Site Clearing

E. Section 312100.01 Topsoil

F. Section 312500 Sedimentation & Erosion Control

G. Section 320100 Restoration

H. Section 321216 Asphalt Paving

I. Section 321313 Concrete, Sidewalks and Curbing

J. Section 321700 Site Improvements

K. Section 329218 Landscaping

L. Section 333111 Site Sanitary Sewerage Utilities

M. Section 334113 Site Stormwater Utilities

N. Section 335111 Site Natural Gas Distribution

1.2 REFERENCES

A. ASTM D-422 Method for sieve analysis of fine and coarse aggregates.

B. ASTM D-1140 Method for determination of fine soil fraction.

C. ASTM D-1556 Test method for density of soil and soil aggregate in place by the sand cone method.

D. ASTM D-1557 Test method for moisture density relationships of soils and soil aggregate mixtures.

E. ASTM D 4318 Test method for determination of plasticity index of soils.

F. AASHTO T 180 D – Test method for moisture density relationships of soils and soil aggregate mixtures in pavement areas.

G. Geotechnical Report for RIPTA Pawtucket-Central Falls Transit Center, 300 Pine St, Pawtucket, RI, prepared by FR Engineering., dated October 11, 2023.

1.3 SUMMARY

A. The specifications herein are minimum requirements and shall apply to all work under this Contract. If the specifications conflict with any Federal, Local and/or State Codes, Regulations and/or Ordinances, the more stringent shall apply and be adhered to.

B. The work under this Section includes all labor, supervision, materials and equipment necessary for the completion of all earthwork including, but not be limited to:

1. Excavation and backfilling for demolition of utilities.
2. Preparation of subgrades for pads, walks, pavements, turf and landscaping.
3. Subbase and base courses for concrete walks and pads.
4. Subbase and base courses for asphalt pavements.
5. Removal and offsite disposal of unsuitable materials.
6. Furnishing and placement of fill.
7. Protection of existing structures, utilities and site improvements.
8. Dewatering if necessary.
9. Excavation and backfilling for light poles, lighting conduit, and conduit.
10. Excavation and backfilling for bollards, gates, and fencing.
11. Compaction of fills.
12. Excavation and backfilling for utilities.
13. Excavation and backfilling for building footings and slabs.
14. Base courses for building footings and slabs.
15. Removal and replacement of fills.
16. Legal offsite disposal of unsuitable materials, unsatisfactory soils and excess materials not incorporated into the work.
17. Excavation and backfill for irrigation sleeves.
18. Furnishing and placing specified materials in logical sequences to balance site cuts and fills as close as feasible.
19. Aeration of wet soils before reuse.

1.4 SUBMITTALS

A. A report containing the following shall be submitted for all soil materials to be used as fill:
1. Gradation test results, for each type of fill beneath structures, pavements sidewalks and utilities.
2. Plasticity test results per ASTM D 4318.
3. Compaction Curves per ASTM D-1557 for each type of soil material used.

B. Environmental Test Reports for any common or controlled fill material that is obtained from offsite sources.

1.5 PROJECT CONDITIONS

A. The Contractor shall visit the site prior to bidding and familiarize himself with existing site conditions and project requirements. The Contractor shall be responsible for identifying any conflicts between existing conditions and these specifications and/or drawings. The Contractor shall notify the Engineer of any such conflicts prior to bidding.

B. Demolition, earthwork and/or other construction operations shall not interfere with building/facility ingress or egress unless approved by the Owner in writing. All building ingress and egress points shall be accessible at all times. Walks, parking areas, drives and roads shall remain unobstructed. The Contractor shall utilize signage, cones, barrels and other forms of traffic control to direct protect pedestrians and vehicles during demolition, earthwork and construction operations. The Contractor may only close off walks, parking areas, drives and roads if approved by the Engineer in writing. As part of the approval, the Engineer may require alternate routes and traffic controls to be implemented.

C. Demolition, earthwork and/or other construction operations shall not interfere with existing utility services. The Contractor shall provide temporary utility service prior to disconnecting any existing utilities. All utility disconnections and temporary utilities services shall be coordinated with the Owner. Provide and install temporary lighting if required by the Owner.

D. The Contractor shall contact “Call Before You Dig” at 800.922.4455 at least 72 hours prior to the commencement of any construction operations, including, but not limited to demolition, site clearing, earthwork, site work and work in driveways and parking areas.

E. Sedimentation and Erosion Controls shall be installed as shown on the Contract Drawings and/or as specified herein.

F. The Contractor shall furnish and install any sheeting, shoring and bracings for excavations as required by Federal, State and Local Laws, Regulations and Ordinances including CFR 29 Part 1926.

G. Costs for sampling, transporting, and making all laboratory tests required to obtain characteristics of materials from on-site and off-site sources proposed to be used for fills and backfills including gradations tests and determination of moisture density relationships, shall be borne by the Contractor.

1.6 SITE INVESTIGATION

A. The Contractor acknowledges that he has satisfied himself as to the nature and location of the work, the general and local conditions, particularly those bearing upon transportation, disposal, handling and storage of materials, availability of labor, water, electric power, roads and uncertainties of weather, groundwater table or similar physical conditions at the site, the conformation of subsurface materials to be encountered, the character of equipment and facilities needed prior to and during the prosecution of the work and all other matters which can in any way affect the work or the cost thereof under this contract. Any failure by the Contractor to acquaint himself with all information concerning these conditions will not relieve him from responsibility for estimating properly the difficulty or cost of successfully performing the work.

1.7 SUBSURFACE DATA

A. The Contractor acknowledges that he assumes all risk contingent upon the nature of the subsurface conditions, including rock, to be actually encountered by him in performing the work covered by the Contract, even though such actual conditions may result in the Contractor performing more or less than he originally anticipated. No warranty, either expressed or implied, is made as to the accuracy of any subsurface information presented.

B. Variations in existing ground or subsurface soil conditions differing from those indicated in the Contract Documents shall not under any conditions constitute grounds for changes in Contract Price or completion dates of this Contract.

1.8 PROTECTION OF EXISTING STRUCTURES

A. The Contractor shall protect existing underground utilities to remain, the location of which is shown approximately on the drawings or which are located in the field. Utilities whose location is not known shall be protected insofar as possible. All costs for repair of broken or damaged utilities will be the responsibility of the Contractor.

B. Visit the site to review all details of the work and working conditions and to verify dimensions in the field including headroom and interferences from adjacent structures. Notify the Owner in writing of any discrepancy before performing any work.

C. Protect existing above ground structures, landscaping, appurtenances from movement or settlement. Provide bracing and shoring as needed.

D. Consult official records of existing utilities, both surface and subsurface, and their connections to be fully informed on all existing conditions and limitations as they apply to this work and its relation to other construction work. The Contractor shall contact **Call Before You Dig" at 1-800-922-4455** to assist in locating utilities at least 3 working days prior to performing any earthwork operations on the site.

E. Make a personal inspection of the site to evaluate the conditions affecting the work. No claim for additional costs will be allowed because of lack of knowledge of any existing conditions discernible from observation of the site, adjoining properties, or other available sources of information.

1.9 APPLICABLE STANDARDS

A. ASTM D-422 - Method for sieve analysis of fine and coarse aggregates.

B. ASTM D-1140 - Method for determination of fine soil fraction.

C. ASTM D-1556 - Test method for density of soil and soil aggregate in place by the sand cone method.

D. ASTM D-1557 - Test method for moisture - density relationships of soils and soil aggregate mixtures.

E. ASTM D-2167 - Test method for density of soil and soil aggregate in place by the balloon method.

F. ASTM D 4318 Test method for determination of Plasticy Index of soils.

G. ASTM D-5195 - Test method for density of soil and rock at depths below the surface by nuclear methods.

H. ASTM D-5220 - Test method for water content of soil and rock in-place by neutron depth probe method.

1.10 SITE PREPARATION

A. The Subcontractor shall verify existing grades prior to beginning general earthwork. If existing grades are at variance with the Contract Drawings, notify the Engineer and receive instructions prior to proceeding.

B. All bench marks and monuments shall be protected during construction. If disturbed or destroyed, replace in original position.

C. Construction stakeout shall be by a licensed surveying firm provided by the Contractor. Exact locations and grade points are to be staked or fixed by the surveying firm prior to construction.

PART 2 - MATERIALS

2.1 SOIL MATERIALS

Provide soil materials when sufficient satisfactory soil materials are not available from required excavation operations as shown on the Contract Drawings and/or specified herein.

A. Suitable Native Material

1. Material that is found on-site and is approved by the Engineer for use. Material shall be free of ice, snow, roots, vegetation, organics and any other deleterious materials.

   Material shall only be used beneath pavement if the material's plasticity index does not exceed 15 (20 when used below 2-feet of subgrade) and liquid limit does not exceed 40. Clayey and/or silty soils are prohibited for use beneath pavement.

   Material may be used for fill slopes and in areas outside any existing or future structural bearing zone.

B. On-site Fill

1. Material shall consist of on-site excavated soil may be used if meeting the gradation requirements for Controlled Fill if tested and approved by the Geotechnical Engineer and if environmentally clean. Material shall be free of ice, snow, roots, vegetation, organics and any other deleterious materials. Material shall consist of sand, gravel, rock fragments, or a mixture thereof. Material may only be used as fill if rocks larger than 3.5 inches have been removed and it is placed and compacted sufficiently so that a stable subgrade is achieved.

   Material may be used for backfill for structures, pavements, as indicated on the Contract Drawings and as specified herein. Material may not be used in areas requiring greater infiltration rates for drainage. If needed and/or as directed by the Engineer, the Contractor shall screen the material to segregate and remove unsuitable materials.

C. Controlled Fill

Material shall be free of ice, snow, roots, vegetation, organics and any other deleterious

materials. Material conform to the following gradation requirements:

Sieve Size	Percent Passing by Weight
3½ inch	100
¾ inch	50 - 100
No. 4	25 - 75

The fraction passing the No. 4 sieve shall have <15% passing the No. 200 sieve. (On-site soils will not meet this gradation.)

Material shall be used in demolition voids and in existing and future structure areas including, but not limited to, beneath future structure foundations, slabs and other areas considered to be soil bearing. This material may also be used for fill beneath pavements, fill slopes, general fill and as subbase for walks.

D. Free Draining Sand

1. Material shall be free of ice, snow, roots, vegetation, organics and any other deleterious materials and shall consist of hard durable sand conforming to the following gradation requirements:

Sieve Size	Percent Passing by Weight
1½ inch	100
1 inch	45 - 80
¼ inch	25 - 60
No. 10	15 - 45
No. 40	5 - 25
No. 100	0 - 10
No. 200	0 - 4

Material may be used for bedding for utilities.

E. Processed Aggregate Base

1. Material shall consist of hard, durable processed gravel. Material shall be free of ice, snow, roots, vegetation, organics and any other deleterious materials and shall be uniformly blended. Material shall conform to Rhode Island Department of Transportation Standard Specifications for Roads and Bridge Construction, Section M.01.05 and meet the following gradation requirements:

Sieve Size	Percent Passing by Weight
2 ½ inch	100
2 inch	95 - 100
¾ inch	50 - 75
¼ inch	25 - 45
No. 40	5 - 20
No. 100	2 - 12

Material shall be used a base beneath asphalt pavements and as shown on the Contract Drawings and as specified herein.

F. Gravel Base/Subbase

1. Material shall be free of ice, snow, roots, vegetation, organics and any other deleterious materials and conform to the requirements of the Rhode Island Department of Transportation Standard Specifications for Roads and Bridge Construction, Section M.01.02 and shall meet the gradation requirements specified in Column 1b of the Table in Subsection M01.09

   Material shall be used a subbase where indicated beneath asphalt pavements and as a base beneath walks and as shown on the Drawings and as specified herein.

G. Crushed Stone – ¾ Inch

1. Material shall consist of hard durable crushed rock or crushed stone free of ice, snow, roots, vegetation, organics, and any other deleterious materials and shall conform to Rhode Island Department of Transportation Standard Specifications for Roads and Bridge Construction, Section M.01.04 for crushed stone and meet the following gradation requirements:

Sieve Size	Percent Passing by Weight
1¼ inch	100
1 inch	90 - 100
¾ inch	75 - 100
¼ inch	25 - 60
No. 40	10 - 35
No. 100	3 - 12
No. 200	0 - 5

H. Crushed Stone – $^3/_8$ inch

1. Material shall consist of hard durable crushed rock or crushed stone free of ice, snow, roots, vegetation, organics, and any other deleterious materials and shall conform to Rhode Island Department of Transportation Standard Specifications for Roads and Bridge Construction, Section M.01.04 for crushed stone and meet the following gradation requirements:

Sieve Size	Percent Passing by Weight
½ inch	100
$^3/_8$ inch	85 - 100
No. 4	10 - 30
No. 8	0 - 10
No. 16	0 - 5

J. Underground-Type Plastic Line Markers: Manufacturer's standard permanent, bright-colored, continuous-printed plastic tape, intended for direct-burial service; not less than 6"

wide x 4 mils thick. Provide (standard utility colors) tape with black printing reading "CAUTION (NAME OF UTILITY) LINE BELOW" by ProLine, Inc., Harris Industries or approved equal.

K. Processed Gravel: Processed gravel shall be coarse aggregate produced by crushing and/or screening naturally occurring boulder, cobble, and gravel sized materials extracted from single source location. Process gravel shall be free of deleterious material or soft, friable particles and shall be graded as follows:

Sieve Size	Percent Passing By Weight
3 inch	100
1.5 inch	70-100
¾ inch	50-85
No. 4	30-60
No. 200	0-10

L. Clean Gravel Borrow: Clean Gravel Borrow shall consist of bank run sand and gravel or plan processed, crushed or uncrushed gravel with fine aggregate added as filler. Alternatively, Clean Gravel Borrow may consist of selected materials which have been reclaimed from within project limits are proportioned and processed to produce granular material for reuse as Clean Gravel Borrow within the source project limits. Clean Gravel Borrow, whether consisting of bank run or plant processed sand and gravel or reclaimed and processed granular material shall consist of sound durable particles free from loam, clay, organic soil, vegetative matter, soft and elongate particles.

Clean Gravel Borrow shall conform to all applicable specification requirements prior to its final placement on the project. The practice of culling deleterious or out of specification material after placement and/or grading in-place will not be allowed.

Bank run or plant-processed sand and gravel proposed for Clean Gravel Borrow shall be well-graded and meet the gradation requirements specified in the table below. In addition, the maximum particle size shall not exceed 9 inches or three-fourths of the loose lift thickness, whichever is smaller.

Clean Gravel Borrow may be produced by reclamation of selected materials available within project limits, or other sources as approved by the Engineer, which are suitably proportioned and processed to produce a mixture of granular particles meeting the gradation requirements specified herein. Suitable materials may include: natural granular soils, boulders, or rock; roadway subbase, base and asphalt or concrete pavement; and other concrete, stone, brick, or cinder block, recovered from existing foundations, buildings, or selected utilities.

Materials not allowed for reclamation shall include but are not limited to: rubber, plastic, glass, wood, reinforcing steel or other metallic materials; building materials which may be sources of lead or asbestos; components of septic, leaching bed, and sanitary sewer systems including soils, pipes, and structural concrete; soils or other materials contaminated by synthetic organic or inorganic compounds, metals, or petroleum hydrocarbon products.

Processing shall crush or pulverize and break down asphalt concrete conglomerations such that only bituminous coatings remain on aggregates. All materials suitable for reuse shall be broken down such that the processed mixture shall meet the gradation requirements specified in the table below.

Reclaimed and Processed Granular Material shall conform to all applicable specification requirements prior to its final placement on the project. The practice of culling deleterious or out of specification material after placement and/or grading in-place will not be allowed.

Clean Gravel Borrow shall be graded as follows:

	Bank Run/Proc Sand Gravel	Reclaimed Processed Material
Sieve Size	Percent Passing By Weight	
3 inch	60-100	100
1.5 inch	-	70-100
¾ inch	-	50-85
0.5 inch	50-85	-
3/8 inch	45-80	-
No. 4	40-75	30-55
No. 40	0-45	-
No. 50	-	8-25
No. 200	0-10	2-10

PART 3 - EXECUTION

3.1 PREPARATION

A. Protect structures, utilities, sidewalks, pavements and other facilities from damage caused by settlement, lateral movement, undermining, washout and other hazards created by earthwork operations.

B. Protect and maintain erosion and sedimentation controls during earthwork operations.

C. Protect subgrades and foundation soils from freezing temperatures and frost. Remove temporary protection before placing subsequent materials.

3.2 DEWATERING

A. Prevent surface water and groundwater from entering excavations, from ponding on prepared subgrades and from flooding the Project Site, street Rights of Way, structures and surrounding areas.

B. Protect subgrades from softening, undermining, washout, and damage by rain or water accumulation.

C. Reroute surface water runoff away from excavated areas. Do not allow water to accumulate in excavations. Do not use excavated trenches as temporary drainage ditches unless noted otherwise on the Contract Drawings.

3.3 EXPLOSIVES

A. Explosives are not permitted and shall not be used.

3.4 GENERAL EXCAVATION

A. Excavate to subgrade elevations regardless of the character of surface and subsurface conditions encountered. Unclassified excavated materials may include rock, soil materi

als and obstructions. No changes in the Contract Sum or the Contract Time will be authorized for rock excavation, unsuitable soil excavation or removal of obstructions. If excavated materials intended for fill and backfill include unsatisfactory soil materials and/or rock, replace with satisfactory soil materials.

3.5 EXCAVATION FOR STRUCTURES

A. Excavate to indicated elevations and dimensions shown on Contract Drawings or as directed by the Engineer. If applicable, extend excavations a sufficient distance from structures for placing and removing concrete formwork, for installing services and other construction, and for inspections.

1. Excavation for any Underground Tanks and Utility Structures: Do not disturb bottom of excavations intended as bearing surfaces.
2. Footing excavation shall be on natural inorganic soils or on controlled fill after removal of any existing fills. Where footing subgrade is wet and subject to remolding after exposure to equipment, over-excavate a minimum of 6 inches as directed by the Geotechnical Engineer and replace with a minimum of 6 inches of 3/8 inch crushed stone beneath the footings on the natural soils and beneath controlled fills where over a wet subgrade. Controlled fill shall extend horizontally beyond the footings for a distance equal to at least the depth of fill beneath the footings. All backfill and fill shall be compacted to 95% of modified optimum density per ASTM D1557.
3. Slab-on-grade excavation shall be constructed by removing all existing fill beneath the proposed slab. Remove all existing fill and/or natural inorganic soils to allow installation of 16 inches minimum of controlled fill beneath the proposed slab and 6 inches of ¾ inch processed stone base below underside of slab compacted to at least 97% of modified optimum density per ASTM D1557.

B. Excavations at Edges of Tree- and Plant-Protection Zones:

1. Excavate by hand to indicated lines, cross sections, elevations, and subgrades. Use narrow-tine spading forks to comb soil and expose roots. Do not break, tear, or chop exposed roots. Do not use mechanical equipment that rips, tears, or pulls roots.
2. If root trimming is needed, roots of “Trees to be protected” shall be selectively trimmed by a Rhode Island Licensed Arborist.

C. If unsuitable soil material and/or rock is encountered in load bearing areas, remove off-site and replace with satisfactory soil materials.

3.6 EXCAVATION FOR WALKS AND PAVEMENTS

A. Excavate surfaces under walks and pavements to indicated lines, cross sections, elevations and/or subgrades.

B. If unsuitable soil material and/or rock is encountered in load bearing areas, remove off-site and replace with satisfactory soil materials.

3.7 EXCAVATION FOR UTILITY TRENCHES

A. Excavate trenches to indicated gradients, lines, depths, and elevations or as required for utility removals.

B. Excavate trenches to uniform widths to provide the required clearance on each side of pipe or conduit, as indicated in the Drawings.

C. Trench Bottoms: Excavate trenches to the depth indicated on the Drawings to allow for bedding course. Hand-excavate deeper for bells of pipe.

D. Trenches in Tree- and Plant-Protection Zones: Hand-excavate to indicated lines, cross sections, elevations and subgrades. Use narrow-tine spading forks to comb soil and expose roots. Do not break, tear, or chop exposed roots. Do not use mechanical equipment that rips, tears, or pulls roots. Do not cut main lateral roots or taproots; cut only smaller roots that interfere with installation of utilities. If root trimming is needed, roots of "Trees to be protected" shall be selectively trimmed by a Rhode Island Licensed Arborist.

E. If unsuitable soil material and/or rock is encountered in load bearing areas, remove off-site and replace with satisfactory soil materials.

3.8 SUBGRADE INSPECTION

A. The Contractor shall notify the Engineer when excavations have reached required subgrade. The Contractor shall not proceed with any backfilling, subbase or base course operations until the subgrade has been inspected by the Engineer.

B. If the Engineer determines that unsatisfactory soil is present, continue excavation and replace with compacted backfill or fill material as directed by the Engineer.

C. Proof-roll subgrade below all pads, pavements and walks by doing a minimum of eight (8) passes with a vibratory steel drum roller with a minimum static weight of 10,000 pounds to identify soft pockets and areas of excess yielding. Do not proof-roll wet or saturated subgrades.
   1. Completely proof-roll subgrade in one direction and repeating in direction perpendicular to first direction.
   2. Excavate soft spots, unsatisfactory soils, and areas of excessive pumping or rutting, as determined by Engineer, and replace with compacted backfill or fill as directed by the Engineer.

D. Subgrades damaged by freezing temperatures, frost, rain, accumulated water, or construction activities shall be reconstructed, as directed by the Engineer, at no additional cost to the Owner.

3.9 STORAGE OF SOIL MATERIALS

A. Stockpile borrow soil materials and excavated satisfactory soil materials without intermixing. Place, grade, and shape stockpiles to drain surface water. Cover to prevent windblown dust. Stockpile soil materials away from edge of excavations. Do not store within drip line of remaining trees.

3.10 GENERAL BACKFILL

A. Materials suitable for reuse as determined by the Engineer shall be stored in designated locations. Topsoil that is to be reused shall be stored separately from general fill.

B. Backfill shall only take place after demolition in the immediate area is complete and subgrades, utility installations, underground drainage and any other underground work has been completed and approved by the Engineer.

C. All temporary shoring, bracing, sheeting, formwork, debris shall be removed prior to backfilling.

D. Plow, scarify, bench or break up sloped surfaces steeper than 1 vertical to 4 horizontal so fill material will bond with existing material.

E. Place and compact fill material in maximum 12 inch lifts for demolition void backfills, match to existing adjacent finished grade to required elevations.

F. The Contractor shall provide off-site borrow material if necessary to achieve design subgrades after suitable onsite materials have been utilized.

G. Grade and compact fill so that the final surface will readily shed water. Slope fill surfaces away from buildings a minimum of two inches in 10 feet, unless otherwise noted.

H. Where horizontal layers meet a naturally rising slope exceeding 1 vertical to 5 horizontal, key layer into slope by benching into the slope with minimum 4 foot high vertical steps.

I. At completion of work, excess fill materials shall be removed from the site.

J. The degree of compaction shall be based on a maximum dry density as determined by ASTM D-1557. Compaction of silt and clays and of fine sand and silty sand shall be for materials at moisture contents within the percentages of acceptable optimum moisture contents. The degree of compaction for fill placed in various areas shall be as follows:

Area	Degree of Compaction
Controlled Fill	
Below existing and future floor slabs	97%
Below existing and future foundations	95%
Controlled Fill	
Below pavements, pads and sidewalks	95%
Deeper than 6 feet below pavement, pads and sidewalks	92%
Pavement base courses	95%
Sidewalk base courses	95%
Below pavement and sidewalk subbase courses	95%
Trench backfill outside of building, pavement and load bearing areas	92%
Trench backfill inside of building and beneath pavement and load bearing areas	95%
All fill outside building, pavement, sidewalk and load bearing zones	92%

All fill in slope areas at or steeper than 10H:1V	92%
General landscaping areas	90%

H. Fill shall be placed in loose lift thickness not exceeding twelve (12) inches in depth. The entire area of each layer shall be compacted with the specified equipment to the specified degree as outlined herein. No subsequent layer shall be deposited until the specified compaction is achieved for the previous layer. Compacted fills shall be prevented from freezing by use of approved admixtures or by use of approved protection on the surface, or both.

3.11 UTILITY TRENCH BACKFILL

A. Once subgrade has been inspected and approved by the Engineer, the pipe or conduit has been removed or has been placed and the pipe joints made in accordance with these specifications, backfilling shall be performed. The Contractor shall be held responsible for the satisfactory execution of pipe line and conduit demolition backfill or construction. If subsequent testing shows defects in materials or workmanship, the necessary repairs and replacements shall be made by the Contractor at his own expense to the satisfaction of the Engineer.

B. Bedding shall be as specified as shown on the Contract Drawings and/or as specified herein. Backfill shall be placed simultaneously on either side of the pipe alignment.

C. The trench shall be backfilled between the bottom of the pipe to a minimum of 12 inches above the crown of the pipe by placing and compacting the specified materials by hand.

D. No stone or rock fragment greater than 3 inches shall be used as trench backfill until a minimum of 12 inches of backfill has been placed above the pipe. Backfilling shall be placed in 9-inch maximum loose lifts.

E. Material compaction is prohibited if the material is too wet to be compacted properly; at such times, the compaction work shall be suspended until the previously placed and new materials have dried out sufficiently to permit proper compaction, or such other precautions shall be taken as may be necessary to obtain proper compaction. Water jetting or flooding to attain compaction is not permitted.

F. An independent testing laboratory shall perform compaction tests at intervals not exceeding 150 feet of trench for the first and final 9 inch lift of compacted trench backfill and furnish copies of test results as specified.

3.12 PAVEMENT BASE AND SUBBASE

A. Subbase preparation shall be carefully shaped to the required cross section and compacted as specified herein. The entire area of each layer of the embankment and the subgrade in the excavated areas shall be uniformly compacted to at least the required minimum density by use of compaction equipment consisting of rollers, compactors or a combination thereof. Earth-moving and other equipment not specifically manufactured for compaction purposes shall not be considered as compaction equipment. Compact each lift by a minimum of six passes of a Bomag 210 vibratory roller or equivalent vibratory roller.

B. The dry density after compaction shall not be less than 95 percent of the dry density for that soil when tested in accordance with ASTM D-1557 (Modified Proctor).

C. Where underdrains and outlets are specified on the plans needed per direction by the Engineer, they shall be in place and functioning before any subbase material is placed.

D. Spread subbase material uniformly upon the required grade, in courses not to exceed 6 inches in thickness after final compaction. However, if the required thickness of subbase does not exceed 8 inches, it may be placed in one course.

E. Compact after each course has been placed as specified above; its entire area shall be compacted with equipment specifically manufactured for that purpose. The sole use of hauling and spreading equipment shall not be considered as a substitute for compacting equipment.

F. Spreading shall begin at the end of the project nearest the source of supply of the material in such a way that as the work progresses the material is trucked over material that is already in place so as to obtain as much compaction as possible during construction.

G. Should the foundation material beneath any subbase become churned up and mixed with subbase at any time, the Contractor shall, without additional compensation, remove the mixture and replace it with new subbase material to the required thickness shown on the plans or as previously required by the Engineer. Such replaced subbase material shall be compacted to the required minimum density placed upon the prepared subbase to a depth which will not be less than the required depth after compaction. The subbase shall be true to line and grade a minimum of 200 feet in advance of the work. Maximum thickness of the course shall not exceed four (4) inches prior to compaction unless permitted by the Engineer.

H. Processed aggregate base preparation shall be uniformly placed upon the prepared subbase to a depth which will not be less than the required depth after compaction. The subbase shall be true to line and grade a minimum of 200 feet in advance of the work. Maximum thickness of the course shall not exceed four (4) inches prior to compaction unless permitted by the Engineer.

I. The bottom course shall be spread uniformly upon the prepared subbase. Only approved spreaders or stone boxes shall be used. Power graders shall not be used unless otherwise permitted by the Engineer. After the aggregate is spread, it shall be thoroughly compacted and bound use of equipment specifically manufactured for that purpose. Rollers shall deliver a ground pressure of not less than 300 pounds per linear inch of contact width and shall weigh not less than 10 tons. Vibratory units shall have a static weight of not less than 4 tons. Water may be used during the compaction and binding operation. Water shall be applied from an approved watering device. The direction and intensity of the stream shall be as ordered by the Engineer. The compacting and binding operation shall begin at the outside edges, overlapping the shoulders for a distance of not less than 6 inches and progress towards the middle, parallel with the centerline of the pavement. The work shall cover the entire surface of the course with uniform overlapping of each preceding track or pass. Areas of super-elevation and special cross slope shall be compacted by beginning at the lowest edge and proceeding towards the higher edge, unless otherwise directed by the Engineer. The compacting and binding operation shall be continued until the voids in the aggregates have been reduced to provide a firm and uniform surface satisfactory to the Engineer. The amount of compactive effort shall be as directed by the Engineer, but in no case shall be less than four (4) complete passes of the compacting equipment being used. Any surface fines shall be distributed uniformly by use of brooms during the compacting and binding operations. All aggregate shall be completely compacted and bound at the end of each day's work or when traffic is to be permitted to operate on the road.

J. Construction methods for the top course shall be the same as described for the bottom course. Construction of the top course shall not commence until the bottom course has been approved by the Engineer and accepted. Final total thickness of the two courses shall equal the thickness as specified on the plans. Any soft yielding or irregular areas which develop during or after work on either course shall be removed and replaced with suitable aggregate as required. The area shall then be rebound and recompacted until it is brought to a uniform surface to match the adjacent base all as approved by the Engineer.

3.13 GRADING

A. Grading outside building lines shall consist of grading areas adjacent to building lines to drain away from structures and to prevent ponding. Finish ground surfaces shall be free from irregular surface changes, and meet the following requirements:

1. Grassed areas: Finish areas scheduled to receive topsoil to within not more than 2” above or below the required subgrade elevations.
2. Walks: Shape surface of areas under walks to line, grade and cross-section, with finish surface not more than 1” above or below the required subgrade elevation.
3. Pavements: Shape surface areas under pavement to line, grade and cross-section, with finish surface not more than 1” above or below the required subgrade elevation.

B. Grading between final grades indicated on drawing shall be smooth with even surfaces, except if noted otherwise.

C. Modify dewatering procedures which cause, or threaten to cause, damage to new or existing facilities.

3.14 SHORING, SHEETING AND BRACING

A. Provide shoring, sheeting and/or bracing of excavations as required to assure complete safety against collapse of earth at side of excavations. Alternatively, lay back excavations to a stable slope. Shoring Sheeting and Bracing shall be designed by the Contractor’s Rhode Island Licensed Professional Engineer and submitted to the Owner’s Geotechnical Engineer for review prior to construction.

B. Excavations shall be adequately sheeted, shored and braced as necessary to permit proper execution of the work and to protect all slopes and earth banks until new building walls are cured and acceptable for backfill. Sheet piling shall be installed if required to prevent cave-ins or settlement and to protect workmen and utilities. Shoring and bracing may be removed as the backfilling progresses, but only when banks are safe against caving, taking all necessary precautions to prevent collapse of excavation sides. Bracing of all foundation walls during backfilling and compaction is the responsibility of the Contractor.

C. Comply with OSHA and local safety regulations, and CFR 29 part 1926.

D. Remove sheeting or shoring, etc. as backfilling operations progress, taking all necessary precautions to prevent collapse of excavation sides. Where sheeting is required to be left in place, as determined by the Geotechnical Engineer, in areas not indicated on Contract Drawings, additional payment will be made as provided under changes in the work.

E. Temporary bracing of all below-grade walls to eliminate movement during backfilling will be required except in cases where the walls have been integrated into the permanent su

perstructure and derive support there from. The design and proposed construction procedure for bracing systems shall be prepared by the Contractor's Rhode Island Licensed Professional Engineer and submitted to the Owner's Geotechnical Engineer for review at least one week prior to commencing backfill operations.

3.15 FIELD QUALITY CONTROL

A. Provide for the observation of the excavation bottoms and bearing surfaces for the Engineer.

B. Testing and analysis of fill materials will be performed in accordance with ASTM D422, D1140 and D1557.

C. In-place compaction testing will be performed in accordance with ASTM D1556, D2167 or ASTM D5195 or ASTM D1557.

D. If tests indicate work does not meet specified requirements, remove work or recompact where appropriate, replace and retest at no cost to Owner.

3.16 PROTECTION

A. Protecting Graded Areas: Protect newly graded areas from traffic, freezing, and erosion. Keep free of trash and debris. Do not place fill over frozen soil.

B. Repair and reestablish grades where completed or partially completed surfaces have become eroded, rutted, settled, or where they lose compaction due to subsequent construction operations or weather conditions.
   1. Scarify or remove and replace soil material to depth as directed by Engineer; reshape and recompact.

C. Where settling occurs before Project correction period elapses, remove finished surfacing, backfill with additional soil material, compact, and reconstruct surfacing.
   1. Restore appearance, quality, and condition of finished surfacing to match adjacent work, and eliminate evidence of restoration to greatest extent possible. Recompact fills subject to vehicular traffic or other disturbances.

D. Protect excavations to prevent cave in or loose soil or debris from falling into excavation. Observe OSHA Standards for trenching and excavation.

3.17 DISPOSAL OF SURPLUS AND WASTE MATERIALS

A. Remove surplus satisfactory soil and waste materials, including unsatisfactory soil, trash, and debris, and legally dispose of them off Owner's property.

END OF SECTION 312100

SECTION 31 210 0.01 – TOPSOIL

PART 1 – GENERAL

1.1 RELATED DOCUMENTS

A. Drawings and general provisions of the Contract, including General and Supplementary Conditions and Division 1 Specification Sections, apply to this Section.

B. Rhode Island Department of Transportation Standard Specifications for Roads and Bridge Construction amended February 2024.

C. Section 312100 Earthwork

D. Section 329218 Landscaping

1.2 SUMMARY

A. This Section includes the following:

1. Providing, testing, placing and finish grading all stockpiled and borrow topsoil as shown on the Drawings and specified herein to properly complete all lawn and planting operations.
2. Topsoil for planting areas, including lawns, shall meet specifications for “Planting Soil” as defined in Section 2.1.

1.3 SUBMITTALS FOR REVIEW

Topsoil test results shall be submitted to the Engineer/Owner for review to determine acceptability.

Test Reports: Submit the following reports directly to Engineer from the testing services:

a. Laboratory analysis of each soil material/source proposed for backfill from on-site and borrow sources.

b. Verification of suitability of subgrade material, in accordance with specified requirements.

c. If more than one source of fill will be used, at least one (1) fill sample shall be collected and laboratory analyzed from each source (even if less than 100 cubic yards of material is obtained from the source).

d. Planting Soil test and analysis for nutrient and soil make up for growing of vegitation.

e. A statement as to the origin of all off site soils (type of material and where they are coming from) that are to be imported onto the site.

f. All testing results shall have occurred within a six month time frame of the date of submission to the Engineer. All testing results shall clearly be marked with the testing date and the origin of the material sample.

1.4 QUALITY ASSURANCE

A. The source(s) and use of the planting soil prior to stripping shall be known and documented. Pesticide use on the site shall be documented and provided to the Engineer. Soils with a known use of residual (preemergence) herbicide within two years of stripping are not acceptable.

B. A representative sample of the planting soil shall be analyzed/tested to determine:

1. Nutrient analysis using the Modified Morgan extractant for soil available P, K, Ca, and Mg.
2. Soil pH
3. Organic content
4. Particle Size analysis – sand, silt, and clay – analysis shall be determined using the hydrometer method of particle size analysis with size fractions based upon size limits established by USDA
5. Lab shall provide recommendation soil amendments to be added for lawn and shrub/tree establishment.

C. At least 3 tests shall be taken from each source, and from onsite materials. Provide a minimum of 3 tests per 1,000 cy delivered/amended at site. Planting soil testing costs shall be borne by the Contractor.

D. Agricultural planting soil testing labortary shall be an independent laboratory or university laboratory, recognized by the State Department of Agriculture, with the experience and capability to conduct the testing indicated and that specializes in types of tests to be performed.

E. Product Certificates: For soil amendments and fertilizers, signed by product manufacturer.

PART 2 – PRODUCTS

2.1 PLANTING SOIL

A. Texture

1. Shall be a sandy loam as per USDA Soil Classification as determined by laboratory particle size analysis, with the following additional particle size limits:

   Sand – minimum 60 % by weight
   Silt – between 10 and 30 % not to exceed 75% by weight
   Clay – between 5 and 15 % by weight

2. Planting Soil shall not contain materials harmful to plant life, to be clean, fertile, friable, and well-draining. All Planting Soil to be free of any subsoil earth clods, sods, stones over ¾” in any dimension, sticks, roots, weeds, litter and other deleterious material.
3. Coarse Fragments: Topsoil must pass through a ¾”-inch mesh and be free of stones and other foreign materials that are retained by the screen. Gravel between 2 mm and 9.5 mm (3/4”) shall not exceed 5 percent by weight.
4. Planting Soil Source: Obtain planting soil displaced from naturally well-drained sites where topsoil occurs at least 4 inches deep; do not obtain from bogs or marshes.
5. Nutrient levels shall be achieved by the Contractor’s addition of amendments to the topsoil to meet the optimum nutrient levels specified in the testing laboratory report.

Organics

6. Planting soil shall be uniform in quality and texture and contain organic matter and mineral elements necessary for sustaining healthy plant growth.

7. Planting soil shall have the following optimum ranges unless otherwise approved by the Landscape Architect.
   a. Organic Matter Content 6-8%

8. pH 6-7

Organic Amendments

9. Acceptable organic materials to achieve the organic matter range include commercially prepared compost with the following characteristics.
   a. Minimum organic matter content: 85%
   b. Minimum fiber as retained by a 150 mm sieve: 60%
   c. Maximum mineral content: 15%
   d. Commercial Compost
   e. Minimum organic matter content: 50%
   f. Carbon-nitrogen ration: 20 to 30
   g. Particle size: <3/8”
   h. Metals: Not to exceed state standards for biosolids

Metals: Metals shall not exceed state standards for agricultural soils.

B. Sand Amendments

1. Sand required to achieve the specified permeability for planting soil should meet ASTM Standard C33, Concrete Sand, and possess a Coefficient of Uniformity less than 4 and a Fineness Modulus between 2.7 and 3.

PART 3 – EXECUTION

3.1 SHAPING AND GRADING OF SUBSOIL AT ANY LAWN AREAS

A. After rough grading has been completed, shape and grade lawn subgrade areas to lines and levels as required based on total amounts of approved topsoil to allow placement of uniform depth of topsoil. Adjustments may be necessary due to field conditions. Provide all shaping adjustments at no additional cost.

B. Harrow or otherwise loosen the subgrade soil to 12” depth if required to correct for over compaction.

C. After shaping of subgrades, remove all sticks, stones, or foreign material two (2) inches or greater in dimension. Remove debris and stone off-site.

3.2 SPREADING OF PLANTING SOIL

A. Once approved, no vehicular traffic will be allowed on finish subgrade. Planting Soil will not be permitted to be spread until planting soil test reports have been submitted and approved. Planting soil shall not be delivered or worked in a frozen or muddy condition.

B. All planting soil shall be screened to assure appropriate size distribution and mixing of amendment materials such as organics or sand.

1. Other mixing methodologies shall be reviewed with the Engineer.

C. Uniformly distribute and spread planting soil over all graded lawn areas to conform smoothly to the lines, grades, and elevations shown or otherwise required. All lawn areas

to have a minimum of six (6) inches of topsoil after finished installation. Maintain consistent depths of material throughout the project area.

1. Manually supply planting soil around all trees to remain. Avoid damage to root systems.
2. Uniform planting soil layer is critical.

D. Re-supply and place planting soil to eroded, settled or damaged areas until all lawn areas are stabilized. Care shall be taken not to damage grass or pavement areas in the replacement to topsoil.

3.2 TOLERANCES

A. Comply with tolerances as follows:

1. Elevation: Plus 1/2 inch or minus 1/2 inch
2. Thickness: Plus 2 inches or minus 0 inch
3. Surface: Gap below 10 foot long straight edge not to exceed 1 inch in any direction (excluding intersections of planes at ridge & toe lines)
4. Slope: unless otherwise noted on the drawings not less than 1% fall
5. Settlement: less than 1/4 inch against adjoining pavements, structures and drainage inlets

3.3 PROTECTION

A. Remove weeds prior to development operations. No weeds shall be allowed to go to seed.

B. Keep heavy equipment, trucks, etc. off planting soils areas at all times.

C. If compaction occurs, scarify to the full depth of the planting soil and regrade.

D. Utilize only low bearing equipment for field work.

E. Placement planting soils for mixing of amendments is not permitted when materials or site are wet, damp, or frozen.

3.4 EXCESS TOPSOIL

A. Material approved for reuse but not required to be installed remains the property of the Contractor and shall be removed by the Contractor at no additional cost.

B. Material not approved for reuse shall be disposed of by the Contractor and is to be removed from the site at the completion of site activities.

END OF SECTION 312100.01

SECTION 31 23 16 – EXCAVATION

PART 1 GENERAL

1.1 SECTION INCLUDES

A. Excavating for building volume below grade, footings, pile caps, slabs-on-grade, paving, site furnishings, site structures, stormwater management ponds and improvements, site utilities, and utilities within the building.

1.2 RELATED REQUIREMENTS

A. Geotechnical Report for RIPTA Pawtucket-Central Falls Transit Center, 300 Pine Street, Pawtucket, RI, prepared by FR Engineering Group, dated October 11, 2023. The geotechnical report is included as an appendix to these construction documents.
B. Rhode Island Department of Transportation Standard Specifications for Roads and Bridge Construction amended February 2024.
C. Drawings and general provisions of the Contract, including General and Supplementary Conditions and Division 01 Specification Sections, apply to this Section.
D. Section 31 2100 Earthwork
E. Section 31 2323 Fill.

1.3 PROJECT CONDITIONS

A. Verify that survey bench mark and intended elevations for the Work are as indicated.

1.4 QUALITY ASSURANCE

A. Perform Work in accordance with RIDOT and City of Pawtucket standards.

1. Maintain one copy on site.
2. Comply with CFR 29 Part 1926 and OSHA requirements.
3. Recommendations in Geotechnical reports prepared for this site shall be adhered to in the prosecution of Excavation. A copy of the Geotechnical report is included with this contract
4. Conform to Environmental Regulations requirements and notify Owner for direction of environmentally impacted soils or materials are encountered during Grading Work.

1.5 QUANTITIES AND MATERIAL TYPES

A. Unless specifically stated on the Drawings, the Owner makes no representation as to the quantity of materials or types of materials to be encountered during the excavation operations. The Contractor must adhere to rough and finish grades as required by the Drawings, while assessing their own estimate of the quantity and types of materials to be encountered. Unless specifically stated on the Drawings, the excavation operation shall be considered unclassified materials, with the Owner responsible for no additional cost due to quantity and/or types of materials encountered.

B. Unsuitable material includes organic soil in subgrade bearing locations, peat branches, logs, stumps, existing Structures (footings Foundations, pavements, slabs, abandoned utilities) existing fill, trash, snow routes, sod rubbish or other deleterious matter.

PART 2 PRODUCTS - NOT USED

PART 3 EXECUTION

3.1 EXAMINATION

A. Verify that survey bench mark and intended elevations for the work are as indicated.

3.2 PREPARATION

A. Identify required lines, levels, contours, and datum locations.

C. Contact Digsafe at least 72 hours prior to commencement of excavation Earth Work at 811.

3.3 EXCAVATING

A. Underpin adjacent structures that could be damaged by excavating work.

1. Delegated Design: Design underpinning support system including comprehensive engineering analysis by a qualified professional engineer, using performance requirements and design criteria required.

B. Excavate to accommodate new structures and construction operations.

C. Notify Engineer and Owner's Representative of unexpected subsurface conditions and discontinue affected Work in area until notified to resume work.

D. Slope banks of excavations deeper than 4 feet to angle of repose or less until shored.

E. Do not interfere with 45 degree bearing splay of foundations.

F. Hand trim excavations. Remove loose matter.

G. Remove lumped subsoil, boulders, and rock up to 1/3 cu yd measured by volume. See Section 31 2100 Earthwork for removal of larger material.

H. Correct areas that are over-excavated and load-bearing surfaces that are disturbed; See Section 31 2323 Fill.

I. Grade top perimeter of excavation to prevent surface water from draining into excavation.

J. Remove excavated material that is unsuitable for re-use from site.

K. Stockpile excavated material to be re-used in area designated on site.

L. Remove excess excavated material from site.

M. Proof roll at proposed excavated subgrade elevation in all structural areas prior to the placement of structural fill or construction of foundation elements using a steel drum vibratory roller having a minimum state weight of 10 tons. Proof roll a minimum of 5 overlapping passes across the entirety of the building pads and other structural areas. Remove or replace any loose or unstable areas encountered during proof rolling and compaction and as directed by the Geotechnical Engineer.

N. Remove unsuitable material and soft areas in Subgrade as directed by Owner’s Geotechnical Engineer. No additional payment to excavate, remove unsuitable soils and replace with suitable on-site or off-site soils is to be made to the Contractor to perform this work.

O. Do not excavate below top of suitable in place natural soil subgrades except as described within the specifications for footing foundation construction and utility installation.

3.4 FIELD QUALITY CONTROL

A. See the General and Supplementary Conditions and Division 01 Specification Sections of this contract, for general requirements for field inspection and testing.

B. Provide for visual inspection of load-bearing excavated surfaces before placement of foundations.

3.5 PROTECTION

A. Prevent displacement of banks and keep loose soil from falling into excavation; maintain soil stability.

B. Protect bottom of excavations and soil adjacent to and beneath foundation from freezing.

C. Protect all subgrade soils. Excavate subgrade soils which become disturbed, loose or saturated.

END OF SECTION 312316

SECTION 31 23 23 – FILL

PART 1 GENERAL

1.1 SECTION INCLUDES

A. Filling, backfilling, and compacting for building volume below grade.

B. Backfilling and compacting for utilities and storm drainage system outside the building to utility main connections and to drainage system termination locations.

C. Filling holes, pits, and excavations generated as a result of removal (demolition) operations.

D. Filling, backfilling, and compacting for sitework improvements.

1.2 RELATED REQUIREMENTS

A. Geotechnical Report for RIPTA Pawtucket-Central Falls Transit Center, 300 Pine Street, Pawtucket, RI, prepared by FR Engineering Group, dated October 11, 2023. The geotechnical report is included as an appendix to these construction documents.

B. Rhode Island Department of Transportation Standard Specifications for Roads and Bridge Construction amended February 2024.

C. Section 03 3000 Cast-in-Place Concrete.

D. Section 31 2100 Earthwork.

E. Section 31 2316 Excavation.

1.3 DEFINITIONS

A. Subgrade Elevations: As indicated on drawings.

1.4 REFERENCE STANDARDS

A. AASHTO T 180 - Standard Specification for Moisture-Density Relations of Soils Using a 4.54 kg (10-lb) Rammer and a 457 mm (18 in.) Drop; American Association of State Highway and Transportation Officials; 2010 (most recent version).

B. ASTM D698 - Standard Test Methods for Laboratory Compaction Characteristics of Soil Using Standard Effort (12,400 ft-lbf/ft3 (600 kN-m/m3)); 2007 (most recent version).

C. ASTM D1556 - Standard Test Method for Density and Unit Weight of Soil in Place by the Sand-Cone Method; 2007 (most recent version).

D. ASTM D2167 - Standard Test Method for Density and Unit Weight of Soil in Place by the Rubber Balloon Method; 2008 (most recent version).

E. ASTM D2487 - Standard Practice for Classification of Soils for Engineering Purposes (Unified Soil Classification System); 2010 (most recent version).

F. ASTM D 2922 - Standard Test Methods for Density of Soil and Soil-Aggregate in Place by Nuclear Methods (Shallow Depth); 2005 (most recent version).

G. ASTM D3017 - Standard Test Method for Water Content of Soil and Rock in Place by Nuclear Methods (Shallow Depth); 2005 (most recent version).

1.5 SUBMITTALS

A. See the General and Supplementary Conditions and Division 01 Specification Sections of this contract, for submittal procedures.

B. Samples: 50 lb sample of each type of fill; submit in air-tight containers to testing laboratory.

C. Materials Sources: Submit name of imported materials source.

D. Fill Composition Test Reports: Results of laboratory tests on proposed and actual materials used.

E. Compaction Density Test Reports.

F. Soil Suitability Report: Report confirming that the use of On-site soil for use as structural fill prior to and during placement meets the criteria specified in the Geotechnical Engineering Report.

G. Flowable fill mix design.

1.6 DELIVERY, STORAGE, AND HANDLING

A. When necessary, store materials on site in advance of need.

B. When fill materials need to be stored on site, locate stockpiles where designated.

1. Separate differing materials with dividers or stockpile separately to prevent intermixing.
2. Prevent contamination.
3. Protect stockpiles from erosion and deterioration of materials.

1.7 QUANTITIES AND MATERIAL TYPES

A. Unless specifically stated on the Drawings, the Owner makes no representation as to the quantity of materials or types of materials to be encountered during the grading, excavation, earth moving, and trenching operations. The Contractor must adhere to rough and finish grades as required by the Drawings, while assessing their own estimate of the quantity and types of materials to be encountered. Unless specifically stated on the Drawings, the grading, excavation, earthmoving, and trenching operation shall be considered unclassified materials, with the Owner responsible for no additional cost due to quantity and/or types of materials encountered.

PART 2 PRODUCTS

2.1 FILL MATERIALS

A. General: Provide borrow soil materials when sufficient satisfactory soil materials are not available from excavations.

B. Follow all applicable requirements and specifications within the Geotechnical Engineering Report included with this contract.

C. General Fill: Subsoil excavated on-site, or borrow fill.

1. Graded.
2. Free of lumps larger than 6 inches, rocks larger than 6 inches, and debris.
3. Shall be clean fill material free of debris and organic matter and shall have a plasticity index of less than 10 for imported borrow fill.

E. Structural Fill: Processed bedrock

1. Well-Graded.
2. Maximum particle size no larger than 6 inches within upper 4’ of the building pads subgrade elevation and within the upper 1 foot of the pavement subgrade elevation.
3. Maximum particle size no larger than 12 inches below 4’ or more of the building pads and below 1 foot or more of the pavement subgrade.
4. Processed bedrock used for pavement sub base or concrete slab base shall be crushed and screened with a maximum particle size of 2 inches with a maximum of 25% passing the ½-inch sieve and no more than 10% passing the No. 200 sieve.

G. Alternate Structural Fill: material from stratum I as identified in the Geotechnical Engineering Report by FR Engineering Group dated October 11, 2023 and as approved by the Geotechnical Engineer. This material is moisture sensitive and difficult to place during periods of adverse weather and may require drying or conditioning to render suitable for proper placement.

H. Concrete for Fill: As specified in Section 03 3000 Sitework Cast-in-Place Concrete; compressive strength as indicated on Drawings.

I. Granular Fill - Gravel: Pit run washed stone; free of shale, clay, friable material and debris.

1. Graded in accordance with ASTM D 2487 Group Symbol GW, GP, GM, or GC.

J. Granular Fill - Pea Gravel: Natural stone; washed, free of clay, shale, organic matter.

1. Grade in accordance with ASTM D 2487 Group Symbol GM or GC.

K. Sand - Fill Type: Natural river or bank sand; washed; free of silt, clay, loam, friable or soluble materials, and organic matter.

1. Complying with ASTM C33 for utility bedding and backfills.
2. Grade in accordance with ASTM D 2487 Group Symbol SW, SP, SM, or SC.

L. Topsoil: See Section 31 2200 Grading and Section 32 9113 Landscape Grading, Topsoil, and Soil Preparation.

M. AASHTO No. 57 gravel.

N. AASHTO No. 57 crushed stone.

O. AASHTO No. 8 crushed stone.

P. AASHTO No. 3 crushed stone for biorentention and hydrant backfill

R. Flowable Fill – Ready-mix controlled low strength material with 28 day compressive strength of 300psi minimum per ASTM C39 containing cement and water. Portland Cement complying with ASTM C150 Type 1 or Type 2 meeting Rhode Island Department of Transportation Standard Specifications for Roads and Bridge Construction as entering and mixture per ASTM C260 Aggregates conforming to ASTM C33.

S. Riprap: Conforming to Rhode Island Department of Transportation Standard Specifications for Roads and Bridge Construction, Section M10.03 Class and Size number indicated on the Plans and consisting of hand cut angular shaped rock with neither width per thickness less than one third its length and with no shale seams.

T. AASHTO No. 67 crushed stone for building floor slabs on grade base material.

2.2 ACCESSORIES

A. Geotextile Fabric: For separation of soil materials - Non-biodegradable, woven, manufactured by:

1. Mirafi, Industrial Fabrics Division, Ten Cate Nicolon USA: Mirafi 140N- website: www.mirafitencate.com.
2. Engineer approved equal.

B. Geotextile Fabric: For pavement subgrade Stabilization.

1. Mirafi Industrial Fabrics Division Ten Cate Mirafi 500.
2. Engineer approved equal.

2.3 SOURCE QUALITY CONTROL

A. See the General and Supplementary Conditions and Division 01 Specification Section of this contract, for general requirements for testing and analysis of soil material.

B. If tests indicate materials do not meet specified requirements, change material and retest.

C. Provide materials of each type from same source throughout the Work.

PART 3 EXECUTION

3.1 EXAMINATION

A. Identify required lines, levels, contours, and datum locations.

B. Verify subdrainage, dampproofing, or waterproofing installation has been inspected.

C. Verify structural ability of unsupported walls to support imposed loads by the fill.

D. Verify underground tanks are anchored to their own foundations to avoid flotation after backfilling.

E. Verification by the Geotechnical Engineer of record suitability of re-used On-site soils

3.2 PREPARATION

A. Scarify subgrade surface to a depth of 6 inches to identify soft spots and proof roll.

B. Cut out soft areas of subgrade not capable of compaction in place. Proof roll backfill with general fill.

C. Compact entire subgrade to density equal to or greater than requirements for subsequent fill material.

D. Until ready to fill, maintain excavations and prevent loose soil from falling into excavation.

E. Proof rolling of completed subgrade at proposed subgrade elevation shall consist of compaction with a steel drum vibratory roller having a minimum static weight of 10 tons. A minimum of 5 overlapping passes of the roller should be completed across the entirety of the building pads, pavements, and all other structural areas.

3.3 FILLING

A. Fill to contours and elevations indicated using unfrozen materials.

B. Fill up to subgrade elevations unless otherwise indicated and proof roll as described in 3.2 E.

C. Employ a placement method that does not disturb or damage other work.

D. Systematically fill to allow maximum time for natural settlement. Do not fill over porous, wet, frozen or spongy subgrade surfaces.

E. Maintain optimum moisture content of fill materials to attain required compaction density.

F. Granular Fill: Place and compact materials in equal continuous layers not exceeding 10 inches compacted depth.

G. Soil Fill: Place and compact material in equal continuous layers not exceeding 10 inches compacted depth.

H. Structural Fill: Place and compact material in equal continuous layers not exceeding 10 inches in loose thickness within areas compacted with a vibratory roller. Place and compact material in equal continuous layers not exceeding 4 inches in loose thickness within areas compacted with hand-operated compaction equipment.

I. Slope grade away from building minimum 2 inches in 10 ft, unless noted otherwise. Make gradual grade changes. Blend slope into level areas.

J. Correct areas that are over-excavated.

1. Load-bearing foundation surfaces: Use structural fill, flush to required subgrade elevation, compacted to 100% percent of maximum dry density per ASTM D698. Use crushed stone in over excavated bedrock location to required elevation.

2. Slab-On-Grade, Parking Areas, and Pavements: Use structural fill, flush to required subgrade elevation, compacted to 100% percent of maximum dry density per ASTM D698.

3. Non-structural areas: Use general fill, flush to required elevation, compacted to minimum 92 percent standard Proctor of maximum dry density per ASTM D698.

K. Compaction Density Unless Otherwise Specified or Indicated:

1. Under paving, slabs-on-grade, foundations, subgrade foundation backfill, site structural improvements, and similar construction: 100 percent standard Proctor of maximum dry density.

3.4 FILL AT SPECIFIC LOCATIONS

A. Fill materials shall be as recommended in the Geotechnical Engineering report:

B. Use general fill unless otherwise specified or indicated.

C. Under Interior Slabs-On-Grade:

1. Use AASHTO No. 67 crushed stone for base and structural fill in fill subgrades.

2. Depth: 6 inches deep for base.

3. Compact to 100 percent standard Proctor of maximum dry density.

D. At Foundation Walls and Footings:

1. Use structural fill.

2. Fill up to subgrade elevation.

3. Compact each lift to 100 percent standard Proctor of maximum dry density.

4. Do not backfill against unsupported foundation walls.

5. Backfill simultaneously on each side of unsupported foundation walls until supports are in place.

E. Over Subdrainage Piping at Foundation Perimeter and Under Slabs:

1. Structural fill, crusted stone (AASHTO No. 8 or No. 57) and geotextile fabric.

2. Cover crushed stone with structural fill.

3. Fill up to subgrade elevation.

4. Compact to 100 percent Proctor of maximum dry density.

F. Over Buried Utility Piping, Conduits, and Duct Bank in Trenches:

1. Bedding: As indicated on Drawings.

2. Cover with general fill.

3. Fill up to subgrade elevation.

4. Compact in maximum 4 inch lifts for bedding and 12 inch lifts for remaining backfill to 100 percent standard Proctor of maximum dry density.

G. Around and Over Underground Tanks:

1. Use initial fill of sand.

a. 12 inches deep.

b. Compact to 100 percent standard Proctor of maximum dry density.

2. Complete with granular fill (pea gravel).

a. Depth: Up to subgrade elevation.

b. Compact to 100 percent standard Proctor of maximum dry density.

H. At Lawn Areas:

1. Use general fill.
2. Fill up to 6 inches below finish grade elevations.
3. Fill up to subgrade elevations.
4. Compact to 100 percent standard Proctor of maximum dry density.
5. See Section 31 2100.01 for topsoil placement.

I. At Planting Areas Other Than Lawns:

1. Use general fill.
2. Fill up to 12 inches below finish grade elevations.
3. Fill up to subgrade elevations.
4. Compact to 100 percent standard Proctor of maximum dry density.
5. See Section 31 2100.01 for topsoil placement.

J. At Trench Drains:

1. Use granular fill.
2. Fill up to 8 inches below finish grade.
3. Compact to 100 percent standard Proctor of maximum dry density.

K. Under Paving:

1. Compact subgrade to 100 percent standard Proctor of its maximum dry density before placing fill.
2. Use structural fill.
3. Fill up to subgrade elevation.
4. Compact to 100 percent standard Proctor of maximum dry density.
5. See Section 31 2100 Earthwork for aggregate base course placed over fill.

L. Berm:

1. Compact subgrade to 100 percent standard Proctor of its maximum dry density before placing fill.
2. Place Berm Rock Core – see Plans for volume constraints.
3. Fill with Native Soil up 48 inches below finish grade elevations.
4. Complete with 48” Compacted Topsoil.

3.5 TOLERANCES

A. Top Surface of General Filling for subgrade: Plus or minus 1 inch from required elevations.

B. Top Surface of Filling to subgrade Under Paved Areas: Plus or minus 1 inch from required

elevations.

3.6 FIELD QUALITY CONTROL

A. See the General and Supplementary Conditions and Division 01 Specification Sections of this contract, for general requirements for field inspection and testing.

B. Perform compaction density testing on compacted fill in accordance with ASTM D698, ASTM D1556, ASTM D2167, or ASTM D2922.

C. Evaluate results in relation to compaction curve determined by testing uncompacted material in accordance with ASTM D698 standard Proctor or AASHTO T 180.

D. If tests indicate work does not meet specified requirements, remove work, replace and retest.

E. Proof roll compacted fill subgrades and excavated subgrades at surfaces that will be under slabs-on-grade, pavements, buildings, structures, and site improvements.

3.7 CLEANING

A. Leave unused materials in a neat, compact stockpile.

B. Remove unused stockpiled materials, leave area in a clean and neat condition. Grade stockpile area to prevent standing surface water.

C. Leave borrow areas in a clean and neat condition. Grade to prevent standing surface water.

END OF SECTION 312323

SECTION 31 25 00 - SEDIMENTATION AND EROSION CONTROL

PART 1 - GENERAL

1.1 RELATED DOCUMENTS

A. Drawings and general provisions of the Contract, including General and Supplementary Conditions and Division 01 Specification Sections, apply to this Section.

B. Rhode Island Department of Transportation Standard Specifications for Roads and Bridge Construction, amended February 2024

C. Section 311000 Site Clearing

D. Section 312100 Earthwork

E. Section 312316 Excavation

F. Section 312323 Fill

G. Section 329218 Landscaping

H. Rhode Island Soil Erosion and Sediment Control Handbook, amended 2016.

1.2 SUMMARY

A. The specifications herein are minimum requirements and shall apply to all work under this Contract. If the specifications conflict with any Federal, Local and/or State Codes, Regulations and/or Ordinances, the more stringent shall apply and be adhered to.

B. The work under this Section includes all labor, supervision, materials and equipment necessary for the completion of all work including, but not be limited to:

1. Construction and maintenance of project sedimentation and erosion controls as noted on the Contract Drawings and as specified herein.

1.3 SUBMITTALS

A. Silt sack product data.

PART 2 - MATERIALS

2.1 SILT SACK

A. Silt sack shall be Siltsack as manufactured by SI Geosolutions or approved equal.

2.2 STONE CONSTRUCTION ENTRANCE

A. Crushed Stone of the nominal size if indicated on the Contract Drawings and with Filter Fabric per the Contract Drawings and these specifications.

2.3 TEMPORARY GRASS SEED

A. A perennial rye grass (Lolium Perenne) or an improved variety thereof such as Manhattan, having a minimum purity of 98% and a minimum germination of 90%.

2.4 SILT FENCE

A. Silt fence shall consist of polypropylene geotextile resistant to common soil chemicals, mildew, and insects; non-biodegradable; in longest lengths possible; fabric including seams with the following minimum average properties:

1. Average Opening Size: 30 U.S. Std. Sieve, maximum, when tested in accordance with ASTM D4751.
2. Permittivity: 0.05 sec^-1, minimum, when tested in accordance with ASTM D4491.
3. Ultraviolet Resistance: 80 percent minimum, when tested in accordance with ASTM G-26.
4. Tensile Strength: 120 lb-f, minimum, when tested in accordance with ASTM D1682.
5. Elongation: 20 percent maximum, when tested in accordance with ASTM D1682.
6. Tear Strength: 55 lb-f, minimum, when tested in accordance with ASTM D4533.
7. Color: Manufacturer's standard, with embedment and fastener lines preprinted.
8. Manufacturers:
   a. Propex Geotex
   b. Tencate Envirofence
   c. Engineer approved equal
9. Fabric: 36 inches minimum in width
10. Posts: Hardwood 2 by 2 inches in cross section

PART 3 - EXECUTION

3.1 INSTALLATION AND MAINTENANCE

A. Erosion control measures shall be installed and maintained according to the Contract Drawings and as specified herein and as directed by the Engineer or Regulatory Agencies. Comply with the Rhode Island Soil Erosion and Sediment Control Handbook, latest edition.

B. Comply with CGS 22a 430b and NPDES requirements as applicable for Stormwater Discharges from Construction Activities.

C. The Owner and Inspector have the authority to control the surface area of earth materials exposed by construction operations and to direct the Contractor to immediately provide permanent or temporary pollution control measures to prevent contamination of adjacent property and downstream areas, streams, watercourses, lakes, ponds, or other areas of water impoundment. Every effort shall be made by the Contractor to immediately provide permanent or temporary pollution control measures to prevent contamination of adjacent streams, watercourses, lakes, ponds, or other areas of water impoundment. Every effort shall be made by the Contractor to prevent erosion on the site and abutting property.

D. The Owner and Inspector have the authority to direct the Contractor to divert surface water runoff away from exposed raw earth surfaces through the use of temporary berms, dikes, and diversion channels.

E. The erosion control features shall be installed and maintained by the Contractor, and shall be checked daily after each severe rain storm for damage, until such features are no longer needed. Any sediment traps and sediment basins shall have the accumulated sediment and/or clean water removed before it significantly reduces their storage volume or function, prior to the next rain storm forecast for the region.

F. The installations shall be maintained or replaced until they are no longer necessary for the purposed intended or are ordered removed by the Owner.

G. Silt Sacks shall be installed in existing or proposed catch basins. Remove the grate and place the sack in the opening. Hold out approximately 6 inches of the sack outside the frame. Replace the grate to hold the sack in place. The Silt Sack is considered full and should be emptied when the restraint cord is no longer visible. To remove the Silt Sack, take two pieces of 1” diameter rebar and place through the lifting loops on each side of the sack to facilitate the lifting of the Silt Sack. To empty the Silt Sack, place it where the contents will be collected. Place rebar through the lifting straps (connected to the bottom of the sack) and lift. This will turn the Silt Sack inside out and empty the contents. Clean out with a shovel and rinse. Return the Silt Sack to its original shape and place back in the basin.

H. Temporary erosion control systems installed by Contractor shall be maintained as directed by Owner to control siltation during life of contract. Contractor must respond to maintenance or additional work ordered by Property Owner within 24 hours.

I. All Dewatering Filter Bags shall be placed within non-regulated areas and embedded on 2-inch nominal crushed stone.

J. Stone Construction Entrances shall be installed in accordance with Section 312100 Earthwork and the Contract Drawings and shall be replaced or have addition stone added as construction progresses to ensure continued functionality of the construction entrance as a device for removal of sediment from vehicle tires and as directed by the Engineer.

K. Silt Fences:

1. Store and handle fabric in accordance with ASTM D4873.
2. Do not splice fabric width; minimize splices in fabric length; splice at post only, overlapping at least 18 inches, with extra post.
3. Wherever runoff will flow around end of barrier or over the top, provide temporary splash pad or other outlet protection at such outlets in the run of the barrier, make barrier not more than 12 inches high with post spacing not more than 4 feet.

L. Removal and Disposal of all erosion and sediment controls, temporary structures, silt sacks, temporary fences, stakes, etc. as areas are accepted and stabilized and as approved by Owner and governing agencies.

M. Contractor shall maintain all erosion controls as indicated in plans and specifications as a minimum and as directed by Owner.

END OF SECTION 312500

SECTION 31 50 00 - EXCAVATION SUPPORT AND PROTECTION

PART 1 - GENERAL

1.1 RELATED DOCUMENTS

A. Drawings and General Provisions of Contract, including General and Supplementary Conditions and other Division 1 Specifications Sections, apply to this Section.

B. Rhode Island Department of Transportation Standard Specifications for Roads and Bridge Construction amended to February 2024.

1.2 SUMMARY

A. Section includes temporary excavation support and protection systems.

B. Related Requirements:

1. Section 312100 "Earthwork" for excavating and backfilling, for controlling surface-water runoff and ponding, and for dewatering excavations.

1.3 PREINSTALLATION MEETING

A. Preinstallation Conference: Conduct conference at Project site.

1. Review geotechnical report.
2. Review existing utilities and subsurface conditions.
3. Review coordination for interruption, shutoff, capping, and continuation of utility services.
4. Review proposed excavations.
5. Review proposed equipment.
6. Review monitoring of excavation support and protection system.
7. Review coordination with waterproofing.
8. Review abandonment or removal of excavation support and protection system.

1.4 ACTION SUBMITTALS

A. Product Data: For each type of product.

1. Include construction details, material descriptions, performance properties, and dimensions of individual components and profiles, and calculations for excavation support and protection system.

B. Shop Drawings: For excavation support and protection system, prepared by or under the supervision of a qualified professional engineer.

1. Include plans, elevations, sections, and details.
2. Show arrangement, locations, and details of soldier piles, piling, lagging, tiebacks, bracing, and other components of excavation support and protection system according to engineering design.
3. Indicate type and location of waterproofing.
4. Include a written plan for excavation support and protection, including sequence of construction of support and protection coordinated with progress of excavation.

C. Delegated-Design Submittal: For excavation support and protection systems, including analysis data signed and sealed by the qualified professional engineer responsible for their preparation.

1.5 INFORMATIONAL SUBMITTALS

A. Qualification Data: For the following:

1. Land surveyor.
2. Professional Engineer: Experience with providing delegated-design engineering services of the type indicated, including documentation that engineer is licensed in the state of Rhode Island.

B. Contractor Calculations: For excavation support and protection system. Include analysis data signed and sealed by the qualified professional engineer responsible for their preparation.

C. Existing Conditions: Using photographs show existing conditions of adjacent construction and site improvements that might be misconstrued as damage caused by inadequate performance of excavation support and protection systems. Submit before Work begins.

1.6 CLOSEOUT SUBMITTALS

A. Record Drawings: Identify locations and depths of capped utilities, abandoned-in-place support and protection systems, and other subsurface structural, electrical, or mechanical conditions.

1.7 FIELD CONDITIONS

A. Interruption of Existing Utilities: Do not interrupt any utility-serving facilities occupied by Owner or others unless permitted under the following conditions and then only after arranging to provide temporary utility according to requirements indicated:

1. Notify Architect and Owner no fewer than 2 days in advance of proposed interruption of utility.
2. Do not proceed with interruption of utility without Owner's written permission.

B. Survey Work: Engage a qualified land surveyor or professional engineer to survey adjacent existing buildings, structures, and site improvements; establish exact elevations at fixed points to act as benchmarks. Clearly identify benchmarks, and record existing elevations.

PART 2 - PRODUCTS

2.1 PERFORMANCE REQUIREMENTS

A. Delegated Design: Engage a qualified professional engineer to design excavation support and protection systems to resist all lateral loading and surcharge, including but not limited to, retained soil, groundwater pressure, adjacent building loads, adjacent traffic loads, construction traffic loads, material stockpile loads, and seismic loads, based on the following:

1. Compliance with OSHA Standards and interpretations, 29 CFR 1926, Subpart P.
2. Compliance with AASHTO Standard Specification for Highway Bridges or AASHTO LRFD Bridge Design Specification, Customary U.S. Units.
3. Compliance with requirements of authorities having jurisdiction.

4. Compliance with utility company requirements.
5. Compliance with railroad requirements.

2.2 MATERIALS

A. Provide materials that are either new or in serviceable condition.

B. Structural Steel: ASTM A36/A36M, ASTM A690/A690M, or ASTM A992/A992M.

C. Steel Sheet Piling: ASTM A328/A328M, ASTM A572/A572M, or ASTM A690/A690M; with continuous interlocks.

1. Corners: Site-fabricated mechanical interlock

D. Tiebacks: Steel bars, ASTM A722/A722M.

PART 3 - EXECUTION

3.1 PREPARATION

A. Protect structures, utilities, sidewalks, pavements, and other facilities from damage caused by settlement, lateral movement, undermining, washout, and other hazards that could develop during excavation support and protection system operations.

1. Shore, support, and protect utilities encountered.

3.2 INSTALLATION – GENERAL

A. Locate excavation support and protection systems clear of permanent construction, so that construction and finishing of other work is not impeded.

B. Install excavation support and protection systems to ensure minimum interference with roads, streets, walks, and other adjacent occupied and used facilities.

1. Do not close or obstruct streets, walks, or other adjacent occupied or used facilities without permission from Owner and authorities having jurisdiction.
2. Provide alternate routes around closed or obstructed traffic ways if required by authorities having jurisdiction.

C. Install excavation support and protection systems without damaging existing buildings, structures, and site improvements adjacent to excavation.

3.3 SOLDIER PILES AND LAGGING

A. Install steel soldier piles before starting excavation.

1. Extend soldier piles below excavation grade level to depths adequate to prevent lateral movement.
2. Space soldier piles at regular intervals not to exceed allowable flexural strength of wood lagging.
3. Accurately align exposed faces of flanges to vary not more than 2 inches from a horizontal line and not more than 1:120 out of vertical alignment.

B. Install wood lagging within flanges of soldier piles as excavation proceeds.

1. Trim excavation as required to install lagging.
2. Fill voids behind lagging with soil, and compact.

C. Install wales horizontally at locations indicated on Drawings and secure to soldier piles.

3.4 TIEBACKS

A. Drill, install, grout, and tension tiebacks.

B. Test load-carrying capacity of each tieback, and replace and retest deficient tiebacks.

1. Have test loading observed by a qualified professional engineer responsible for design of excavation support and protection system.

C. Maintain tiebacks in place until permanent construction is able to withstand lateral earth and hydrostatic pressures.

3.5 BRACING

A. Locate bracing to clear columns, floor framing construction, and other permanent work. If necessary to move brace, install new bracing before removing original brace.

1. Do not place bracing where it will be cast into or included in permanent concrete work unless otherwise approved by Architect.
2. Install internal bracing if required to prevent spreading or distortion of braced frames.
3. Maintain bracing until structural elements are supported by other bracing or until permanent construction is able to withstand lateral earth and hydrostatic pressures.

3.6 MAINTENANCE

A. Monitor and maintain excavation support and protection system.

B. Prevent surface water from entering excavations by grading, dikes, or other means.

C. Continuously monitor vibrations, settlements, and movements to ensure stability of excavations and constructed slopes and to ensure that damage to permanent structures is prevented.

3.7 FIELD QUALITY CONTROL

A. Survey-Work Benchmarks: Resurvey benchmarks weekly during installation of excavation support and protection systems, excavation progress, and for as long as excavation remains open.

1. Maintain an accurate log of surveyed elevations and positions for comparison with original elevations and positions.
2. Promptly notify Architect if changes in elevations or positions occur or if cracks, sags, or other damage is evident in adjacent construction.

B. Promptly correct detected bulges, breakage, or other evidence of movement to ensure that excavation support and protection system remains stable.

C. Promptly repair damages to adjacent facilities caused by installation or faulty performance of excavation support and protection systems.

3.8 REMOVAL AND REPAIRS

A. Remove excavation support and protection systems when construction has progressed sufficiently to support excavation and earth and hydrostatic pressures.

1. Remove in stages to avoid disturbing underlying soils and rock or damaging structures, pavements, facilities, and utilities.
2. Fill voids immediately with approved backfill compacted to density specified in Section 312100 "Earthwork."
3. Repair or replace, as approved by Architect, adjacent work damaged or displaced by removing excavation support and protection systems.

END OF SECTION 315000

DIVISION 32

SECTION 32 01 00 – RESTORATION

PART 1 - GENERAL

1.1 RELATED DOCUMENTS

A. Drawings and General Provisions of Contract, including General and Supplementary Conditions and other Division 1 Specifications Sections, apply to this Section.

1.2 SUMMARY

A. The Contractor shall replace and/or restore to the condition existing immediately prior to construction or better than this condition, all signs, topsoil, lawns, bushes, sprinkler heads, shrubs, curb boxes, traffic control signs, monitoring wells, covers, trees, fences, fields, walls, walks, driveways, curbs, incidental works, or any and all other property removed or harmed in any way by reason of work done under this Contract except pavement repair or any item excepted elsewhere in the Contract Documents.

B. Restoration is divided into two categories:

1. Non-maintained areas are defined as pastures, orchards, open-field, woodlands or other areas which are not regularly maintained by the Owner or the property Owner.
2. A maintained area is defined as a lawn, garden, shrub area, drive, walk or other surface or surface structures, all of which are maintained in a regular fashion.

PART 2 - PRODUCTS

NOT USED

PART 3 - EXECUTION

A. In restoring Non-maintained and Maintained areas the Contractor shall:

1. Replace to an equivalent depth any topsoil that has been removed during the excavation, but not less than 4 inches.
2. Remove from the property all trees, brush and other items that the Contractor has cut in order to perform his work and dispose of the materials in a fashion approved by the Inspector or Engineer.
3. Remove from the property upon completion of the Work or soon as directed by the Engineer all excess materials of construction such as stone, pipe, concrete block, gravel, etc. that the Contractor may have stockpiled for use during the course of the Work.
4. Leave the land in smooth, even condition. All ruts, holes or other undesirable grading conditions which resulted from work under this Contract shall be filled and the area so graded to eliminate ponding. All drainage courses shall be restored to their pre-existing condition or better.
5. Fertilize and seed those areas where the original ground cover was removed or disturbed by operations under this Contract.
6. Reset all public or private monuments, iron pipes, curb boxes, manhole covers, sprinkler heads and piping and all types of property line and geodetic markers damaged or disturbed by operations under this Contract. This work will be done by a licensed land surveyor or authorized agent approved by the Engineer - all at no additional cost to the Owner.
7. Repair, reset or replace as directed by the Engineer, all walks, driveways, curbs, pipes, walls, utilities, fences, railings, stone walls, etc., and ornamental or utilitarian

domestic accessories, such as but not limited to sheds, or other surfaces, structures, or property which may have been damaged, either directly or indirectly by his operations under this Contract.

Walks and driveways shall be equivalent to that removed but in no case shall concrete or bituminous concrete walks and driveways be of less quality than that shown on the Contract Drawings.

END OF SECTION 320100

SECTION 32 12 16 - ASPHALT PAVING

PART 1 - GENERAL

1.1 RELATED DOCUMENTS

A. Drawings and general provisions of the Contract, including General and Supplementary Conditions and Division 01 Specification Sections, apply to this Section.
B. Section 312100 Earthwork
C. Section 312323 Fill

1.2 REFERENCES

A. Latest Edition of the Rhode Island Department of Transportation Standard Specifications for Roads and Bridge Construction amended to February 2024 (Standard Specifications).

1.3 SUMMARY

A. The specifications herein are minimum requirements and shall apply to all work under this Contract. If the specifications conflict with any Federal, Local and/or State Codes, Regulations and/or Ordinances, the more stringent shall apply and be adhered to.

B. The work under this Section includes all labor, supervision, materials and equipment necessary for the completion of all work including, but not be limited to:

1. Construction of temporary and permanent asphalt paving structures, consisting of a gravel subbase, a processed aggregate base, a bituminous concrete binder course and a wear course, and tack coat as specified, all conforming to the lines, grades, compacted thickness and typical cross section as shown on the Contract Drawings.

1.4 SUBMITTALS

A. The Contractor shall submit the following samples, certifications or test results prior to use on the project:

1. Sieve analysis and product certification of gravel subbase.
2. Sieve analysis and product certification for processed aggregate.
3. Materials composition and product certification for bituminous concrete binder and surface courses.

PART 2 - MATERIALS

2.1 MATERIALS

A. Gravel Subbase Course shall conform to requirements for gravel subbase as described in Specification Section 312100 Earthwork.

B. Processed aggregate for processed base course shall conform to Section M.03.02.2 of the Standard Specifications in all applicable respects and AASHTO M 323.

C. The material for the asphalt mixture, sources of supply, formula for the job mix, job mix tolerance, approval of job mix formula and the control of the mixture shall conform to the requirements of Section M.03.04.3 of the Standard Specifications.

D. Bituminous binder course gradation shall conform with Section M.03.03.1 of the Standard Specifications.

E. Bituminous concrete wear course and temporary pavement shall conform to Section M.04.01 of the Standard Specifications.

F. Bituminous materials for the tack coat shall be RS-1, RS-1h, SS-1, SS-1h or approved equal.

G. Material for joint sealer for pavement shall be a rubber compound of the hot-poured type and shall conform to AASHTO M173 and approved by the Engineer.

PART 3 - EXECUTION

3.1 SUBGRADE

A. Prepare the subgrade for pavement as detailed on the Contract Drawings and these specifications, below and parallel to the finished grade after compaction, and in accordance with Section 312100 Earthwork. Subgrade shall not be frozen or saturated.

3.2 CONSTRUCTION

A. The methods employed in performing the work and all equipment, tools, machinery, and other plant used in handling materials and executing any part of the work shall conform to all the requirements of Section 312100 Earthwork for construction of the subbase and base and Part 400 of the Standard Specifications for construction of pavement except as noted below:

1. The surface of the finished base shall not vary by more than 1/4 inch from a ten-foot straight edge applied to the base.
2. If temporary pavement surface settles additional bituminous concrete material shall be added by the Contractor as ordered by the Engineer at no additional cost to the Owner. The surface shall be maintained, smoothed and even. Upon completion of all other items of work or when ordered by the Engineer. The Contractor shall remove the temporary bituminous surface, excavate and/or fill and regrade the base material and construct the permanent pavement as shown on the Contract Drawings. Install liquid bitumen sealer at edge of pavement repair, neat lines, per the Contract Drawings.
3. A tack coat shall be applied to any bituminous aggregate base course which has been in place over five days or has been used by traffic prior to the placement of the bituminous surface course.

B. Cold Weather Paving: Pavement mixture shall be laid and carried on only when the surface on which the new bituminous concrete layer is to be placed is dry, the atmospheric temperature in the shade is at least 50°F for lift thickness of less than 1.5 inches, and 40°F for lift thickness of 1.5 inches or greater. Non-wearing course lift thickness of over 2.5 inches may be placed when the atmospheric temperature in the shade is at least 32°F and all other applicable conditions of this Specification have been met.

The weather shall not be foggy or rainy.

The time and length of haul from plant to job site shall be minimized.

Trucks shall have bituminous concrete load tightly tarped, and load shall be protected from exposure to precipitation. Tarps to cover the load should seal over the sides of the truck bed with the goal of a more uniform temperature mix as the mix is delivered to the paver hopper.

Engine exhaust should be ducted inside or adjacent to the truck bed to keep mix hot. Maintain uniform internal heat in the mix.

The total time from mixing to compaction shall be kept as short as possible but should allow a minimum compaction time with rollers of 10 minutes at a maximum speed of 3 MPH to 4 MPH.

Haul trucks should not be kept waiting to unload into the paver hopper. Move the mix material as a mass directly from the haul truck into the hopper of the paver. Take temperature of the mix as it is transferred to the paving machine for compliance with specification.

Placement for base course shall be on a solidly compacted aggregate base at or below optimum moisture content. Base shall not be frozen.

Use of infrared heaters to dry the surface is permissible before placement of hot mix. Receiving surface shall be dry and any applicable tack coat shall be set.

Rollers shall be worked as close to the paver as possible. Use of several rollers and higher capacity rollers operating right behind the paver will be necessary to accomplish the compaction in the short time available.

Paver speed should be controlled to complete the compaction within the time and temperature constraints.

Keep hand work and raking to a minimum to avoid heat loss.

Avoid placing a hot edge against the cold edge of the previous pass. When placing a paving pass, follow up with the adjoining pass before the pavement cools completely.

Roll joints as soon as possible after placement, with most of the drum on the hot pass and overlapping the cold pass by approximately 6 inches. Where possible, construct the joints out of the future traffic wheel paths to reduce the stresses placed upon the joints.

C. Compaction: After the courses have been screeded as specified, each shall be rolled with power rollers as hereinafter provided. When the course spread has set sufficiently or come to the proper condition, it shall be rolled at such a speed as not to cause undue displacement or shoving.

Rollers to be used to compact the course shall be power driven rollers weighing not less than ten tons. If only one roller is used, it shall be a tandem roller, a second roller may be of the three-wheel type. The roller wheels shall be wet with only sufficient water to moisten the wheel surface.

Rolling shall begin at the sides and progress toward the center, uniformly lapping at least one-half the width of the compacting wheel of the roller. Alternate trips of the roller shall be terminated in stops at least three feet distant from any preceding stop. Other rolling procedure may be directed by the Inspector or Engineer as conditions may require. Rolling shall be discontinued if the surface shows signs of cracking and shall be continued later as directed.

The speed of the roller shall not exceed 3 miles per hour and shall at all times be slow enough to avoid displacement of the hot mixture. The rollers shall be in good condition. They shall be operated by experienced rollermen and must be kept in continuous operation

as nearly as practicable in such a manner that all parts of the pavement shall receive substantially equal compression.

In all places inaccessible to a roller, such as adjacent to curbs, headers, gutters, bridges, manholes, etc., the required compression shall be secured with tamps. Depressions which may develop before the completion of the rolling shall be remedied by adding new material to bring such depressions to a true surface. Should any depressions remain after the final compaction has been obtained, new material shall be added to form a true and even surface. All high spots, high joints and other defects shall be adjusted as directed by the Inspector or Engineer.

D. Joints: Placing of the courses shall be nearly continuous as possible and the roller shall pass over the unprotected end of the freshly laid mixture only when the laying of the course is discontinued or interrupted for an appreciable period, and joints shall be formed at such points. Where joints are to be formed the end of the freshly laid mixture shall be cut "square" with the pavement, slightly set up with the back of a metal lute and rolled at slow roller speed so as to cause as little feathering as possible. Before new material is laid the joint shall be cut back and a thin coating of hot asphalt applied to the joint. Care shall be taken to paint off the surface of the pavement.

3.3 INSPECTIONS

A. The Owner assigned representative shall have access to all parts of the work while under construction at all times.

B. Certain inspections by an authorized Supervisor or Engineer are mandatory in order to obtain acceptance of the paving by the Owner. The conditions and timing for those inspections are as follows.

1. After shaping of subgrade and completion of clearing and rough grading and before trenching or spreading of gravel base.
2. During excavation and before construction of embankment or subgrade when soft and unstable material is encountered.
3. When pipe trenches are shaped and prepared for laying pipe.
4. After gravel subbase is spread and compacted, and after the processed aggregate base is spread and compacted, and before pavement base course is started. The Contractor should secure approval of the gravel material before spreading and shall secure approval of the processed aggregate base material before spreading since unsatisfactory material could result in rejection of the completed subbase, or in rejection of the completed base.

5. When placing and rolling of lower and surface pavement course begins to get approval of surface texture to be used as yardstick of minimum acceptability.
6. Pre-acceptance inspection after basic work is completed may be requested in order to ascertain the conditions and requirements for recommendation for final approval.

3.4 FIELD QUALITY CONTROL

A. Testing Agency: Owner will engage a qualified testing agency to perform tests and inspections.

B. Thickness: In-place compacted thickness of hot-mix asphalt courses will be determined according to ASTM D3549.

C. Surface Smoothness: Finished surface of each hot-mix asphalt course will be tested for compliance with smoothness tolerances.

D. In-Place Density: Testing agency will take samples of uncompacted paving mixtures and compacted pavement according to AASHTO T168.

1. Reference maximum theoretical density will be determined by averaging results from four samples of hot-mix asphalt paving mixture delivered daily to site, prepared according to ASTM D2041, and compacted according to job mix specifications.
2. In-place density of compacted pavement will be determined by testing core samples according to ASTM D1188 or ASTM D2726.
   a. One core sample will be taken for every 1,000 square yards or less of installed pavement, with no fewer than three (3) cores taken.
   b. Field density of in-place compacted pavement may also be determined by nuclear method according to ASTM D2950 and correlated with ASTM D1188 or ASTM D2726.

E. Replace and compact hot-mix asphalt where core tests were taken.

F. Remove and replace or install additional hot-mix asphalt where test results or measurements indicate that it does not comply with specified requirements. Area of pavements found to be greater than ¼ inch less than the specified thickness shall be considered non-conforming and subject to corrections. Corrective work shall be performed as directed by the Owner at no additional cost to the Owner.

END OF SECTION 312500

SECTION 32 13 13 - CONCRETE PAVING

PART 1 GENERAL

1.1 SECTION INCLUDES

A. Concrete sidewalks, stair steps, parking areas, and roads.

1.2 RELATED DOCUMENTS

A. Drawings and general provisions of the Contract, including General and Supplementary Conditions and Division 01 Specification Sections, apply to this Section.

B. Latest Edition of the Rhode Island Department of Transportation Standard Specifications for Roads and Bridge Construction amended to February 2024 (Standard Specifications).

C. Section 03 1000 Concrete Forming and Accessories.

D. Section 03 2000 Concrete Reinforcing.

E. Section 03 3000 Cast-in-Place Concrete.

F. Section 31 2100 Earthwork

G. Section 31 2323 Fill.

H. Section 32 1216 Asphalt Paving.

I. Section 32 1700 Site Improvements:

J. Section 33 3111 Site Sanitary Sewerage Utilities

K. Section 33 4113 Site Stormwater Utilities

1.3 REFERENCE STANDARDS

A. ACI 211.1 - Standard Practice for Selecting Proportions for Normal, Heavyweight, and Mass Concrete; American Concrete Institute International; 1991 (most recent version)

B. ACI 301 - Specifications for Structural Concrete for Buildings; American Concrete Institute International; 2010 (most recent version).

C. ACI 304R - Guide for Measuring, Mixing, Transporting, and Placing Concrete; American Concrete Institute International; 2000 (most recent version).

D. ACI 305R - Hot Weather Concreting; American Concrete Institute International; 2006 (most recent version).

E. ACI 306R - Cold Weather Concreting; American Concrete Institute International; 2010 (most recent version).

F. ASTM A185/A185M - Standard Specification for Steel Welded Wire Reinforcement, Plain, for Concrete; 2007 (most recent version).

G. ASTM A615/A615M - Standard Specification for Deformed and Plain Billet-Steel Bars for Concrete Reinforcement; 2009b (most recent version).

H. ASTM C 31 - Standard Practice for Making and Curing Concrete Test specimens in the field; 2008b (most recent version).

I. ASTM C33 - Standard Specification for Concrete Aggregates; 2011 (most recent version).

J. ASTM C39/C39M - Standard Test Method for Compressive Strength of Cylindrical Concrete Specimens; 2010 (most recent version).

K. ASTM C94/C94M - Standard Specification for Ready-Mixed Concrete; 2011 (most recent version).

L. ASTM C150 - Standard Specification for Portland Cement; 2011 (most recent version).

M. ASTM C173/C173M - Standard Test Method for Air Content of Freshly Mixed Concrete by the Volumetric Method; 2010b (most recent version).

N. ASTM C260 - Standard Specification for Air-Entraining Admixtures for Concrete; 2010a (most recent version).

O. ASTM C309 - Standard Specification for Liquid Membrane-Forming Compounds for Curing Concrete; 2007 (most recent version).

P. ASTM C 494/C 494M - Standard Specification for Chemical Admixtures for Concrete; 2010aa (most recent version).

Q. ASTM C618 - Standard Specification for Coal Fly Ash and Raw or Calcined Natural Pozzolan for Use in Concrete; 2008a (most recent version).

R. ASTM C 672/ C 672M - Standard Test Method for Scaling Resistance of Concrete Surfaces Exposed to Deicing Chemicals; 2003 (most recent version).

S. ASTM C685/C685M - Standard Specification for Concrete Made by Volumetric Batching and Continuous Mixing; 2010 (most recent version).

T. ASTM D1751 - Standard Specification for Preformed Expansion Joint Filler for Concrete Paving and Structural Construction (nonextruding and Resilient Bituminous Types); 2004 (Reapproved 2008) (most recent version).

U. ASTM D1752 - Standard Specification for Preformed Sponge Rubber Cork and Recycled PVC Expansion Joint Fillers for Concrete Paving and Structural Construction; 2004a (Reapproved 2008) (most recent version).

1.4 SUBMITTALS

A. Product Data: Provide data on joint filler, admixtures, curing compound, and sealcoat.

B. Design Data: Indicate pavement thickness, designed concrete strength, reinforcement, and typical details.

C. Mix Designs.

D. Submit a letter certifying that the submitted Portland cement concrete mix designs meet the requirements of the Rhode Island Department of Transportation Items as indicated in the specifications.

E. Portland Cement Concrete. Submit Mix Designs for each type specified to the Architect/Engineer, the Independent Testing Agency (ITL), and the Owner's On-site Inspector. Only concrete made with a Mix Design approved by the ITL and the Owner's On-site Inspector shall be used in the Work. Mix Designs shall be complete and include the following:

1. A mix design summary sheet indicating types and quantities of all cements, aggregates, water admixtures, and other mix constituents, and resulting slumps, water/cement ratios, and entrained air percentages.

2. Test data for each aggregate used, to include as a minimum:

a. Plant location.

b. Sieve analysis.

c. Specific gravity.

d. Absorption.

e. Soundness.

3. Compression test results of each proposed mix, to include the following:

a. Result from not less than 30 consecutive compressive strength tests, performed within the preceding 90 days, on concrete provided from the same plant, and of the same materials, and essentially same mix. A compressive strength test shall be defined as the average 28 day compressive strength of companion cylinders made conforming to ASTM C-172 and ASTM C-31, and tested in conformance with ASTM C-39.

b. Computation of the average strength and standard deviation of the compressive strength data, as established by ACI 318.

c. Demonstration that the design average strength of the proposed mix design meets or exceeds the specified strength per the following:

1) If standard deviation is less than 500 PSI, then design average strength specified minimum strength + (1.34 X standard deviation).

2) If standard deviation is greater than 500 PSI, the design average strength specified minimum strength - 500 + (2.33 X standard deviation).

PART 2 PRODUCTS

2.1 PRODUCTS FOR PORTLAND CEMENT CONCRETE PAVEMENT:

A. ChemMasters Specialty Construction Products, Madison OH (Website: www.chemmasters.net <http://www.chemmasters.net>, Voice: 800.486.7866).

B. The Continental Products Company, Cleveland OH (Website: www.continentalprod.com <http://www.continentalprod.com>, Voice: 800.305.5869).

C. The Euclid Chemical Company (EUCO), Cleveland OH (Website: www.euclidchemical.com <http://www.euclidchemical.com>, Voice: 800.321.7628).

D. Grace Construction Products (a unit of W.R. Grace and Company) Cambridge MA (Website: www.na.graceconstruction.com <http://www.na.graceconstruction.com>, Voice: 877.423.6491).

E. Master Builders, Incorporated (part of DeGussa AG), Cleveland OH (Website: www.masterbuilders.com <http://www.masterbuilders.com>, Voice: 800.628.9990).

F. Max Katz Bag Company, Incorporated, Indianapolis IN (Voice: 800.225.3729).

G. Midwest Canvas Corporation, Chicago IL (Website: www.midwest.com <http://www.midwest.com>, Voice: 773.287.4400).

H. Reef Industries (Armorlon Division), Incorporated, Houston TX (Website: www.reefindustries.com <http://www.reefindustries.com>, Voice: 800.231.6074).

I. Sika Corporation (USA), Lyndhurst NJ (Website: www.sikausa.com <http://www.sikausa.com>, Voice: 800.933.7452).

J. WR Meadows, Incorporated, Hampshire IL (Website: www.wemeadows.com <http://www.wemeadows.com>, Voice: 800.342.5976).

2.2 JOINT FILLER

B. See Section 32 1373 Concrete Paving Joint Sealants

2.3 FORM MATERIALS

A. See Section 03 1000 Concrete Forming and Accessories.

2.4 REINFORCEMENT

A. See Section 03 2000 Concrete Reinforcing.

2.5 CONCRETE MATERIALS

A. See Section 03 3000 Cast-in-place Concrete.

2.6 ACCESSORIES

A. Curing Compound: ASTM C309, Type 1, Class B.

B. Curing Sheets:

1. 40-inch wide burlap weighing not less than 10 ounces per linear yard, extrusion-coated on one side with a white opaque polyethylene film (with a nominal thickness between 0.004- and 0.005-inches). Securely bond film to the burlap so that there will be no separation of the materials during handling and curing of the concrete. Equal to one of the following:

   a. BurLene by Max Katz Bag Company.

   b. Curelap by Midwest Canvas.

2. Contractor's Option: A naturally colored, non-woven polypropylene fabric with a 4-mil non-perforated reflective (white) polyethylene coating containing stabilizers to resist degradation from ultraviolet light. Fabric shall exhibit low permeability and high moisture retention. Similar and equal in quality to Transguard 4000 by Reef.

C. Anti-Spalling Treatment: A uniformly blended mixture of mineral spirits and boiled linseed oil specifically designed to penetrate the concrete surface and seal against moisture and deicing chemicals.

1. Anti-Spall 50 by ChemMasters.

2. Anti-Spalling Compound by Continental Products.

3. Linseed Oil Treatment by EUCO.

4. Lin-Seal by WR Meadows.

5. Another anti-spalling treatment similar and equal in quality to the treatments listed above - and approved by the Engineer.

D. Joint Sealer: Type hot applied as specified in Section 32 1373 Concrete Paving Joint Sealants.

2.7 CONCRETE MIX DESIGN

A. See Section 03 3000 Cast-in-Place Concrete, for normal weight concrete.

B. Concrete Properties:

1. Compressive Strength, when tested in accordance with ASTM C39/C39M at 28 days: as indicated on the plan set

2. Mix per ASTM-94 unless noted otherwise.

3. Water-Cement Ratio: Maximum 45 percent by weight.

4. Total Air Content: 5 to 8 percent, determined in accordance with ASTM C173/C173M.

5. Maximum Slump: 4 inches; 2 inches for curbs and sidewalk.

6. Maximum Aggregate Size: 1 inch.

2.8 MIXING

A. See Section 03 3000 Cast-in-place Concrete.

PART 3 EXECUTION

3.1 EXAMINATION

A. Verify compacted subgrade is acceptable and ready to support paving and imposed loads.

B. Verify gradients and elevations of base are correct.

3.2 SUBBASE

A. See Section 31 2100 Earthwork for construction of base course for work of this Section.

3.3 PREPARATION

A. Moisten base to minimize absorption of water from fresh concrete.

B. Coat surfaces of manhole and catch basin frames with oil to prevent bond with concrete pavement.

C. Notify Owner's On-site Inspector and the Testing Agency minimum 24 hours prior to commencement of concreting operations.

3.4 FORMING

A. Place and secure forms to correct location, dimension, profile, and gradient.

B. Assemble formwork to permit easy stripping and dismantling without damaging concrete.

C. Place joint filler vertical in position, in straight lines. Secure to formwork during concrete placement.

3.5 REINFORCEMENT

A. Place reinforcement as indicated.

B. Interrupt reinforcement at expansion joints.

C. Place dowels to achieve pavement and curb alignment as detailed.

3.6 COLD AND HOT WEATHER CONCRETING

A. Follow recommendations of ACI 305R when concreting during hot weather.

B. Follow recommendations of ACI 306R when concreting during cold weather.

C. Do not place concrete when base surface temperature is less than 40 degrees F, or surface is wet or frozen.

3.7 PLACING CONCRETE

A. Coordinate installation of snow melting components.

B. Place concrete in accordance with RIDOT Specifications and Standards.

C. Do not place concrete when base surface is frozen, or standing water is present.

D. Place concrete using the slip form technique where feasible.

E. Ensure reinforcement, inserts, embedded parts, formed joints are not disturbed during concrete placement.

F. Place concrete continuously over the full width of the panel and between predetermined construction joints. Do not break or interrupt successive pours such that cold joints occur.

3.8 JOINTS

A. Align curb, gutter, and sidewalk joints.

C. Provide keyed joints as indicated.

3.9 FINISHING

A. Area Paving: Light broom, texture perpendicular to pavement direction.

B. Sidewalk Paving: See Section 03 3000 Cast-in-Place Concrete.

C. Curbs and Gutters: Light broom, texture parallel to pavement direction.

D. Inclined Vehicular Ramps: Broomed perpendicular to slope.

E. Place curing compound on exposed concrete surfaces immediately after finishing. Apply in accordance with manufacturer's instructions.

3.10 JOINT SEALING

A. See Section 32 1373 Concrete Paving Joint Sealants for joint sealer requirements.

3.11 TOLERANCES

A. Maximum Variation of Surface Flatness: 1/4 inch in 10 ft.

B. Maximum Variation From True Position: 1/4 inch.

3.12 FIELD QUALITY CONTROL

A. An independent testing agency will perform field quality control tests, as specified in Division 01 Specification Sections of this contract.

1. Provide free access to concrete operations at project site and cooperate with appointed firm.
2. Submit proposed mix design to inspection and testing firm for review prior to commencement of concrete operations.
3. Tests of concrete and concrete materials may be performed at any time to ensure conformance with specified requirements.

B. Maintain records of placed concrete items. Record date, location of pour, quantity, air temperature, and test samples taken.

3.13 CURING

A. See Section 03 3000 Work Cast-in-Place Concrete.

3.14 PROTECTION

A. Immediately after placement, protect pavement from premature drying, excessive hot or cold temperatures, and mechanical injury.

B. Do not permit vehicular traffic over pavement until concrete pavement has reached a compressive strength of 4000 psi.

END OF SECTION 321313

SECTION 32 13 73 - CONCRETE PAVING JOINT SEALANTS

PART 1 - GENERAL

1.1 RELATED DOCUMENTS

A. Drawings and general provisions of the Contract, including General and Supplementary Conditions and Division 01 Specification Sections, apply to this Section.
B. Latest Edition of the Rhode Island Department of Transportation Standard Specifications for Roads and Bridge Construction amended to February 2024 (Standard Specifications).

1.2 SUMMARY

A. Section Includes:

1. Cold-applied joint sealants.

B. Related Sections:
1. Section 321216 Asphalt Paving.
2. Section 321313 Concrete, Sidewalks and Curbing

1.3 PRECONSTRUCTION TESTING

A. Preconstruction Compatibility and Adhesion Testing: Submit to joint-sealant manufacturers, for testing indicated below, Samples of materials that will contact or affect joint sealants.

1. Use ASTM C 1087 to determine whether priming and other specific joint-preparation techniques are required to obtain rapid, optimum adhesion of joint sealants to joint substrates.
2. Submit no fewer than eight (8) pieces of each type of material, including joint substrates, shims, joint-sealant backings, secondary seals, and miscellaneous materials.
3. Schedule sufficient time for testing and analyzing results to prevent delaying the Work.
4. For materials failing tests, obtain joint-sealant manufacturer's written instructions for corrective measures including use of specially formulated primers.
5. Testing will not be required if joint-sealant manufacturers submit joint-preparation data that are based on previous testing, not older than 24 months, of sealant products for compatibility with and adhesion to joint substrates and other materials matching those submitted.

1.4 SUBMITTALS

A. Product Data: For each joint-sealant product indicated.

B. Samples for Verification: For each kind and color of joint sealant required, provide Samples with joint sealants in 1/2-inch-wide joints formed between two 6-inch long strips of material matching the appearance of exposed surfaces adjacent to joint sealants.

C. Pavement-Joint-Sealant Schedule: Include the following information:

1. Joint-sealant application, joint location, and designation.
2. Joint-sealant manufacturer and product name.
3. Joint-sealant formulation.
4. Joint-sealant color.

D. Qualification Data: For qualified Installer

E. Product Certificates: For each type of joint sealant and accessory, from manufacturer.

F. Product Test Reports: Based on evaluation of comprehensive tests performed by a qualified testing agency, for joint sealants.

G. Preconstruction Compatibility and Adhesion Test Reports: From joint-sealant manufacturer, indicating the following:

1. Materials forming joint substrates and joint-sealant backings have been tested for compatibility with and adhesion to joint sealants.
2. Interpretation of test results and written recommendations for primers and substrate preparation needed for adhesion.

1.5 QUALITY ASSURANCE

A. Installer Qualifications: Manufacturer's authorized representative who is trained and approved for installation of units required for this Project.

B. Source Limitations: Obtain each type of joint sealant from single source from single manufacturer.

C. Product Testing: Test joint sealants using a qualified testing agency.

1. Testing Agency Qualifications: An independent testing agency qualified according to ASTM C 1021 to conduct the testing indicated.

D. Preinstallation Conference: Conduct conference at Project site.

1.6 PROJECT CONDITIONS

A. Do not proceed with installation of joint sealants under the following conditions:

1. When ambient and substrate temperature conditions are outside limits permitted by joint-sealant manufacturer **or** are below 40 deg F.
2. When joint substrates are wet.
3. Where joint widths are less than those allowed by joint-sealant manufacturer for applications indicated.
4. Where contaminants capable of interfering with adhesion have not yet been removed from joint substrates.

PART 2 - PRODUCTS

2.1 MATERIALS

A. Compatibility: Provide joint sealants, backing materials, and other related materials that are compatible with one another and with joint substrates under conditions of service and application, as demonstrated by joint-sealant manufacturer based on testing and field experience.

B. Colors of Exposed Joint Sealants: Match surrounding joint sealants, or as approved by the Engineer.

2.2 COLD-APPLIED JOINT SEALANTS

A. Single-Component, Nonsag, Silicone Joint Sealant for Concrete: ASTM D 5893, Type NS.

1. Products: Subject to compliance with requirements, available products that may be incorporated into the Work include, but are not limited to, the following:

a. Crafco Inc., an ERGON company; RoadSaver Silicone.
b. Dow Corning Corporation; 888.
c. Pecora Corporation; 301 NS.

B. Multicomponent, Pourable, Traffic-Grade, Urethane Joint Sealant for Concrete: ASTM C 920, Type M, Grade P, Class 25, for Use T.

1. Products: Subject to compliance with requirements, available products that may be incorporated into the Work include, but are not limited to, the following:

a. Pecora Corporation; Urexpan NR-200.
b. Or approved equivalent.

2.3 JOINT-SEALANT BACKER MATERIALS

A. General: Provide joint-sealant backer materials that are nonstaining; are compatible with joint substrates, sealants, primers, and other joint fillers; and are approved for applications indicated by joint-sealant manufacturer based on field experience and laboratory testing.

B. Round Backer Rods for Cold-Applied Joint Sealants: ASTM D 5249, Type 3, of diameter and density required to control joint-sealant depth and prevent bottom-side adhesion of sealant.

2.4 PRIMERS

A. Primers: Product recommended by joint-sealant manufacturer where required for adhesion of sealant to joint substrates indicated, as determined from preconstruction joint-sealant-substrate tests and field tests.

PART 3 - EXECUTION

3.1 EXAMINATION

A. Examine joints indicated to receive joint sealants, with Installer present, for compliance with requirements for joint configuration, installation tolerances, and other conditions affecting joint-sealant performance.

B. Proceed with installation only after unsatisfactory conditions have been corrected.

3.2 PREPARATION

A. Surface Cleaning of Joints: Clean out joints immediately before installing joint sealants to comply with joint-sealant manufacturer's written instructions.

B. Joint Priming: Prime joint substrates where indicated or where recommended in writing by joint-sealant manufacturer, based on preconstruction joint-sealant-substrate tests or prior experience. Apply primer to comply with joint-sealant manufacturer's written instructions. Confine primers to areas of joint-sealant bond; do not allow spillage or migration onto adjoining surfaces.

3.3 INSTALLATION OF JOINT SEALANTS

A. General: Comply with joint-sealant manufacturer's written installation instructions for products and applications indicated unless more stringent requirements apply.

B. Joint-Sealant Installation Standard: Comply with recommendations in ASTM C 1193 for use of joint sealants as applicable to materials, applications, and conditions indicated.

C. Install joint-sealant backings of kind indicated to support joint sealants during application and at position required to produce cross-sectional shapes and depths of installed sealants relative to joint widths that allow optimum sealant movement capability.

1. Do not leave gaps between ends of joint-sealant backings.
2. Do not stretch, twist, puncture, or tear joint-sealant backings.
3. Remove absorbent joint-sealant backings that have become wet before sealant application and replace them with dry materials.

D. Install joint sealants using proven techniques that comply with the following and at the same time backings are installed:

1. Place joint sealants so they directly contact and fully wet joint substrates.
2. Completely fill recesses in each joint configuration.
3. Produce uniform, cross-sectional shapes and depths relative to joint widths that allow optimum sealant movement capability.

E. Tooling of Nonsag Joint Sealants: Immediately after joint-sealant application and before skinning or curing begins, tool sealants according to the following requirements to form smooth, uniform beads of configuration indicated; to eliminate air pockets; and to ensure contact and adhesion of sealant with sides of joint:

1. Remove excess joint sealant from surfaces adjacent to joints.
2. Use tooling agents that are approved in writing by joint-sealant manufacturer and that do not discolor sealants or adjacent surfaces.

F. Provide joint configuration to comply with joint-sealant manufacturer's written instructions unless otherwise indicated.

3.4 CLEANING

A. Clean off excess joint sealant or sealant smears adjacent to joints as the Work progresses, by methods and with cleaning materials approved in writing by manufacturers of joint sealants and of products in which joints occur.

3.5 PROTECTION

A. Protect joint sealants, during and after curing period, from contact with contaminating substances and from damage resulting from construction operations or other causes so sealants are without deterioration or damage at time of Substantial Completion. If, despite such protection, damage or deterioration occurs, cut out and remove damaged or deteriorated joint sealants immediately and replace with joint sealant so installations in repaired areas are indistinguishable from the original work.

3.6 JOINT-SEALANT SCHEDULE

A. Joint-Sealant Application: Joints within cement concrete pavement.

1. Joint Location:

a. Expansion and isolation joints in cast-in-place concrete pads, sidewalks and curbs.
b. Contraction joints in cast-in-place concrete pads.
c. Other joints as indicated.

2. Silicone Joint Sealant for Concrete: Single component, nonsag.
3. Joint-Sealant Color: Match surrounding joint sealants, or as approved by the Engineer.

B. Joint-Sealant Application: Joints between cement concrete and asphalt pavement.

1. Joint Location:

a. Joints between concrete and asphalt pavement.
b. Joints between concrete curbs and asphalt pavement.
c. Joints between concrete curb and concrete.
d. Other joints as indicated.

END OF SECTION 321373

SECTION 32 17 00 - SITE IMPROVEMENTS

PART 1 – GENERAL

1.1 RELATED DOCUMENTS

A. Drawings and General Provisions of Contract including General and Supplementary conditions apply to this Section.

The following are minimum requirements and shall govern except that all Federal, Local and/or State Codes and Ordinances shall govern when their requirements are more stringent.

B. Latest Edition of the Rhode Island Department of Transportation Standard Specifications for Roads and Bridge Construction amended to February 2024 (Standard Specifications).

1.2 SUMMARY

Work included: Provide all labor, materials and equipment necessary to supply and install the following:

A. Concrete Filled Steel Pipe Bollards

1.3 REFERENCE STANDARDS

A. American Society for Testing and Materials (ASTM) latest edition

A 120 Pipe, Steel, Black and Hot-Dipped Zinc Coated (Galvanized) Welded and Seamless, for Ordinary Uses.

A 569 Steel, Carbon (0.15 Maximum, Percent), Hot-Rolled, Sheet and Strip Commercial Quality

C 33 Concrete Aggregates

C 94 Ready-Mixed Concrete

C 150 Portland Cement

1.4 RELATED SECTIONS

A. Section 312100 – Earthwork

B. Section 321313 – Concrete, Sidewalks and Curbing

C. Section 321400 – Site Concrete Formwork

1.5 SUBMITTALS

A. Product Data: Submit manufacturer's specifications and installation instructions for each item which is factory-fabricated.

B. Shop Drawings: Submit shop drawings showing location of each item, dimensions, plans and elevations, large scale details, attachment device and other components.

1. Shop drawings shall be accompanied with written evidence of compliance with ASTM standards and specified bending strengths.

1.6 QUALITY ASSURANCE

A. Codes and Standards: Perform excavation and base preparation in compliance with applicable requirements of authorities having jurisdiction.

B. Concrete: Comply with requirements for Site Cast-in-Place Section 321402.

C. Earthwork: Comply with requirements for Earthwork per Section 312100.

PART 2 - PRODUCTS

A. Concrete: Shall conform to Section 321402 Site Cast-in-Place Concrete for 28 day 3,000 psi concrete.

B. Bollards: Fabricated 6” bollards from steel tube, size as detailed, G-60 hot dipped galvanized finish. Fill with concrete and provide galvanized ¼-inch steel plate cap as detailed, joints welded, ground and polished smooth and level. If the steel post is not galvanized it shall be painted. Painting shall consist of one primer coat conforming to Federal Specification TT-P-615d, Type II. Where no PVC external sleeve is indicated, there shall be two finished coats of paint. The final finish coat shall conform to Federal Specification TT-E-527 Air Drying, and the color shall be yellow. The bollards, where indicated, shall otherwise have a PVC external sleeve, color yellow affixed per manufacturer’s specifications to the outside of the pipe bollard as indicated on the Contract Drawings.

PART 3 - EXECUTION

A. General: Install site improvements after final grading is complete. Layout locations accurately according to layout plans. Coordinate with paving and other site related work. Coordinate layout with manufacturer’s recommendations and with approved shop drawings.

B. Excavation: Excavate holes to diameters and spacing indicated, in firm undisturbed soil or compacted soil.

C. Footings: Form and place concrete according to depth and dimensions on the Contract Drawing details for Bollards. See Section 321400 Site Concrete Formwork, and Section 321402 Site Cast-in-Place Concrete.

D. Setting of Bollards: Set bollards to be plumb and at correct height and alignment, and at center of hole. Support post or form securely in correct position for concrete placement and finish. Protect exposed post from spatter.

1. The bollard post shall be filled with concrete. The top shall be rounded to a convex surface. No sharp edges, burrs, threads or other defects shall be exposed. Trowel tops of bollards to a smooth finish with a slight crown to shed water.

E. Adjustment, Cleaning and Finishing of site improvements shall consist of:

1. The repair or replacement of defective items; Replacement shall be made if repair is unacceptable to the Owner.
2. Cleaning items of construction dirt, adhesive, etc.
3. Adjusting operable items for proper operation.

4. Touching up damaged painted or galvanized items with matching paint, stain or cold galvanizing paint
5. Protecting site improvements from damage until project completion.

END OF SECTION 321700

SECTION 32 33 00 - SITE FURNISHINGS

PART 1 - GENERAL

1.1 RELATED DOCUMENTS

A. Drawings and General Provisions of Contract, including General and Supplementary Conditions and other Division 1 Specifications Sections, apply to this Section.
B. Section 312100 Earthwork
C. Section 033000 Cast-in Place Concrete.
D. Section 03 2000 Concrete Reinforcing
E. Latest Edition of the Rhode Island Department of Transportation Standard Specifications for Roads and Bridge Construction amended to February 2024 (Standard Specifications).

1.2 SUMMARY

A. Provide site improvements in the locations shown or as described herein, complete with anchorages and associated site work.

1.3 SCOPE

A. The work of this Section consists of all Site Improvements work and related items as indicated on the Drawings and/or specified herein and includes, but is not limited to, the following:

1. Benches

1.4 SUBMITTALS

A. Contractor shall submit catalog information on site improvements for review by Architect.

PART 2 - PRODUCTS

2.1 BENCH

A. The benches shall be “Camden 72 Steel Bench” by Peterson Manufacturing Co., Inc, or approved equal.
B. Color shall be Black, Mounting shall be: surface mounted.

PART 3 - EXECUTION

3.1 INSTALLATION OF BENCH

A. Install benches in accordance with drawings and the manufacturer’s instructions.

B. The Contractor shall be responsible for timing the delivery of benches to minimize on-site storage time prior to installation. All stored materials must be protected from weather, careless handling, and vandalism.

END OF SECTION 323300

SECTION 32 92 18 - LANDSCAPING

PART 1 - GENERAL

1.1 RELATED DOCUMENTS

A. Drawings and general provisions of the Contract, including General and Supplementary Conditions and Division 01 Specification Sections, apply to this Section.
B. Section 312100 Earthwork
C. Section 312100.01 Topsoil
D. Section 312500 Sedimentation & Erosion Control
E. Latest Edition of the Rhode Island Department of Transportation Standard Specifications for Roads and Bridge Construction amended to February 2024 (Standard Specifications).

1.2 SUMMARY

A. The specifications herein are minimum requirements and shall apply to all work under this Contract. If the specifications conflict with any Federal, Local and/or State Codes, Regulations and/or Ordinances, the more stringent shall apply and be adhered to.

B. The work under this Section includes all labor, supervision, materials and equipment necessary for the completion of all work including, but not be limited to:

1. Preparation of final grade in lawn and planted areas.
2. Furnishing and placing of planting soil.
3. Excavation, preparation and backfilling planting pits, beds, and planters.
4. Preparation of lawn areas.
5. Fertilizing and seeding of lawn areas.
6. Installation of plant materials.
7. Mulching of plant beds, tree pits.
8. Placement staking of all plant materials.
9. Maintenance of materials until acceptance.
10. Hydroseed.
11. Replanting under guarantee
12. Mulch adhesive

1.3 EXAMINATION AND ACCEPTANCE OF SITE

A. The Contractor shall examine the site to determine the adequacy of preceding site preparation. Commencement of work by the Contractor indicates his acceptance of the site areas therein. Rejection of the site by the Contractor shall be substantiated in writing to the Engineer.

1.4 SUBMITTALS

A. Submit list of all plant material sources to the Engineer. Plant material will be subject to visual approval and tagging by the Engineer at growing site. Such inspection does not preclude the right of rejection at project site. Post-bidding substitutes will not be accepted.

1. Manufacturer’s product data for fertilizer.

2. Sample of mulch: 1 gallon

1.5 QUALITY ASSURANCE

A. Industry Reference Standards:

1. American National Standards Institute (ANSI) Publications: ANSI Z60.1-1990 American Standard for Nursery Stock.
2. American Joint Committee on Horticultural Nomenclature (AJCHN) Publication: Second Edition, Standardized Plant Names 1942.
3. 2013 State of Rhode Island General Law:
   a. Rhode Island Commercial Fertilizer Law: Title 2 – Agriculture and Forestry Chapter 2-7 of the 2013 Rhode Island General Law – Commercial Fertilizer, Revisions and Subsequent Amendments.

B. Contractor's Qualifications

1. Contractor shall provide evidence to indicate 5 years of experience in the installation of work specified herein.

1.6 JOB CONDITIONS

A. Plant trees and shrubs after final grades established and prior to planting.

PART 2 - MATERIALS

2.1 TOPSOIL (ON SITE)

A. Existing topsoil on site shall be stripped in all areas of construction.

B. Upon completion of construction and after site has been properly subgraded and cleared of all refuse and debris, the subgrade shall be loosened by disking or scarifying to a depth of 4". Harrow or otherwise loosen the subgrade soil to 12" depth if required to correct for over compaction.

C. Excess topsoil shall become come the property of the Contractor and shall be removed from the site.

2.2 BORROW TOPSOIL

A. Topsoil piled in areas designated on the site shall be kept free from rubbish and other foreign matter, refer to Section 312100.01 Topsoil.

B. Topsoil for shrub trees and ground cover planting installations shall be transported to a designated storage place on site for future use.

2.3 PLANTING SOIL

A. Planting soil shall be spread in all planting areas, including lawn areas, at 6 inch minimum depth and shall be used as backfill in planting pits for trees and shrubs.

B. Planting soil shall meet specifications defined in Section 312100.01 Topsoil.

C. Any special soil mixtures shall be approved in writing by the Engineer.

2.4 FERTILIZERS AND SOIL CONDITIONERS

A. Grass fertilizer shall be composted fertilizer, at least 80% slow release nitrogen derived from natural organic sources, using a minimum analysis of 4-6-4; Landscaper's Choice, Sustane Natural Fertilizer or equal.

B. Plant and shrub fertilizer shall be composted fertilizer using a minimum analysis of 4-4-4 +3Fe and beneficial fungi; Bolster Granular, Sustane Natural Fertilizer or equal.

C. Fertilizers unless otherwise specified, shall be delivered mixed as specified, in standard size, unopened containers, showing weight, analysis and name of manufacturer. They shall be stored in such manner that they will be kept dry and their effectiveness not impaired. If and when bulk delivery and spreading of fertilizer is used, the Contractor shall provide the Owner with a written affidavit certifying its weight and analysis.

D. Super phosphate shall be composed of finely ground phosphate rock, as commonly used for agricultural purposes, containing not less than eighteen percent (18%) available phosphoric acid.

E. Commercial raw bone meal shall be finely ground and have a minimum analysis of one percent nitrogen and 18% phosphoric acid.

F. Local leaf compost shredded 4 times minimum. It shall be brown, clean, low in content of mineral and woody material; mildly acid and granulated or shredded and free from weedy grasses, sedges or rushes.

G. Lime shall be ground, dolomite limestone, 95% passing through a 100 mesh screen.

2.5 BARK MULCH

A. Shredded 100% double finely natural bark mulch shall be clean and insect free, color to be uniform brown. Sample shall be approved by the Engineer.

2.6 PLANT MATERIALS

A. The Contractor shall furnish and plant all plants shown on the Contract Drawings, as specified, and in quantities as listed on the plant materials list.

B. Plants shall be subject to inspection and approval before and upon delivery for conformity to specification requirements as to quality, size, and variety. Rejected plants shall be immediately removed from the site.

C. All plants shall be nursery grown and tagged or otherwise approved by the Engineer.

D. Plants shall conform with the American Association of Nurserymen Standards in all ways or approved by the Engineer.

E. All plants shall be hardy, under climatic conditions, similar to those in the locality of the project.

F. All plants shall be typical of their species or variety and shall have a normal habit of growth. They shall be sound, healthy and vigorous, well branched and densely foliated when in leaf. They shall be free of disease, insect pests, larvae or injury. They shall have healthy well-developed root systems.

G. Substitutions will be permitted only upon written approval by the Engineer.

2.7 HYDROSEED

A. Grass seed for lawn areas shall be fresh, clean, new crop seed composed of the following varieties, mixed in the proportions by weight shown, and testing the minimum percentages of purity and germination.

B. General all-purpose lawn seed mixture: seeding rate 5lbs/1000sf

Mixture	**Rate**
Perennial Rye	10%
Kentucky Blue	10%
Blend of three tall fescues	80%

2.8 SOD

A. Areas designated shall be sodded with a nursery grown certified blend of Kentucky Bluegrass cultivars as approved by Owner or Landscape Architect. The uniform thickness shall be 3/4" with a tolerance of 1/4"±.

Large sod rolls shall be utilized.

2.9 WEED BLOCK FABRIC

A. Weed Block Fabric shall be Typar 3301, Professional Grade Weed Control Fabric or Dupont Commercial Grade Weed Control Fabric.

2.10 MULCH ADHESIVE

A. Adhesive to be applied to mulched beds to protect from high winds. Application per manufacturers' recommendations.

B. Acceptable manufacturers
   a. Mulch-Lock or approved equal

PART 3 - EXECUTION

3.1 DIGGING, HANDLING AND PROTECTION OF PLANTS

A. Plants shall be handled at all times in accordance with the best horticultural practices and so that the roots of balls are adequately protected from sun and drying winds. Bare rooted plants shall be dug with spread of roots sufficient to insure full recovery and development. Balled and burlapped plants shall be dug with firm, natural balls of soil of a sufficient diameter to encompass fibrous and feeding roots. No plant shall be delivered to the site with a cracked or broken ball. Peat balls and containers of adequate size to sustain

growth shall be acceptable. Plants in containers shall have been through one growing season in the specified container size.

3.2 SEASONS FOR PLANTING & SEEDING

A. Evergreen Tree and Shrub Planting: April 1 to June 1; August 15 to October 15

B. Deciduous Tree and Shrub Planting: April 1 to June 15; September 1 – November 1

C. Seeding: April 1 to June 15; August 15 to November 1

D. Plant only when ground is not frozen, saturated or snow covered.

3.3 PLANTING OPERATIONS

A. Tree and shrub pits shall equal twice in diameter the ball of earth or spread of roots of the tree or shrub, backfill with planting medium. Continuous shrub, groundcover/perennial bed to have 6” minimum depth of planting medium.

B. Planting Beds shall be excavated and backfilled with approved planting soil to a depth suitable for healthy and sustained growth. Spread 2” of equal parts of peat and manure and incorporate into planting soil.

C. The plant shall be set at the original field depth of the stock except where the soil is poorly drained. In poorly drained soil, set the plant a few inches higher. The level of the root ball shall be level with the surrounding grade.

D. Plants shall be set vertically in center of pits plumb and straight faced to give the best appearance to adjacent areas. When balled and burlapped trees are set, planting soil shall be compacted and watered in to fill all voids. All burlap, ropes or wires shall be removed from the tops of balls. Roots of bare root plants shall be properly spread out and planting soil carefully worked in among them. Any broken or frayed roots shall be cut off clean. A shallow saucer slightly larger then pit shall be formed with a ridge of soil to contain water. Plants located on slopes shall have a higher ridge on the downhill side which continues until it dies into the existing slope. Cultivate the soil in the shrub beds between shrub pits, rake smooth, neatly outline and mulch.

E. Pruning

1. All newly planted trees and shrubs shall be pruned in accordance with American Association of Nurserymen standards to preserve the natural character of the plant. All dead wood or suckers and all badly broken branches shall be removed.
2. Cuts over 1" in diameter shall be painted with an approved tree paint. Paint shall cover all exposed cambium, as well as other exposed living tissue.

F. Soil around the plants shall be thoroughly watered after planting operations are complete.

G. Mulch immediately after planting operations are completed.

3.4 RESTORATION

A. Repair any damage to lawn areas resulting from planting operations.

3.5 LAWNS INSTALLATION

A. Refer to Section 312100 Earthwork for preparation of subgrade.

B. There shall be no application of planting soil made without the prior approval of the finished subgrade by the Engineer.

C. Placing Planting Soil

1. After scarifying subsoil, the planting soil shall be uniformly distributed on the designated areas and evenly spread, and in sufficient depth to compensate for heavy shrinkage, so that the thickness of compacted topsoil shall be a minimum of 6" as called for and shall meet finish grades. Irregularities in the surface resulting from the operations thereon shall be corrected to prevent the formation of depressions where water will stand. Planting soil shall not be placed or worked when it or the subgrade is frozen, muddy, excessively dry, or in a condition otherwise detrimental to the proposed seeding or to proper grading. Placement of planting soil shall be performed only when it can be followed within a reasonable time by the seeding operation to restrict weed growth. After planting soil has been placed all heavy equipment, trucks, etc., shall not be permitted to travel on loamed areas.

D. Lawn Seed or Sod Bed Preparation Method

1. Areas to be fine graded for lawns: All areas not covered by buildings or structures, paving or planting areas or otherwise designated shall be fine graded and prepared for lawns within the contract limit lines.
2. Remove all stones and foreign debris over 1.5” inch in greatest dimension.
3. Soil shall be loosened by means of a scarifier or other disking methods to a depth of four inches to obtain a loose friable soil.
4. Stones and other debris shall then be picked to a diameter of 1.5".
5. Fine-grade to smooth, even surface free of humps or hollows by means of grader or approved leveling and smoothing device.

E. Lawn Seeding:

1. All material shall be applied in accordance with soil test recommendations as shown on the materials rate chart.
2. Lime shall be applied evenly by mechanical means or truck bulk spread at the rates 0shown. Then incorporated into top 4" of topsoil.
3. Evenly fertilize as per fertilizer section 2.04.
4. Purity and Germination: Bags must contain dealer's guaranteed statement of composition of mixture and percentages of purity and germination. Seed shall be delivered in unopened bags with label attached.
5. Seeding Operations: Seeding shall be done between April 11 to June 15 or August 15 to November 1, except as otherwise authorized by the Owner or Engineer, and with the consent of the Contractor.
6. Hydroseed in two directions with fertilizer and mulch to rate shown in chart. In areas where seed cannot be hydroseeded, apply seed with a hand spreader and lightly rake seed in and roll with a hand roller not heavier than 300 pounds.
7. Upon completion of seeding Contractor shall dispose of excess materials, soil, rubbish off site, and leave the site in orderly condition.

F. Crab Grass Preventative manufactured by Tupersan or approved equal shall be utilized per manufacturer’s recommendation.

G. Lawn Pest Control: Use material recommended by Extension Services State Entomologist.

H. Recommended Rate Chart (shall be applied unless approved otherwise by the Engineer):

Material	**Per 1000 Sq.Ft. Lawn Area**
Lime	75 Lbs.
Fertilizer (10-6-4)	20 Lbs.
Seed	5 Lbs.
Crab Grass Preventative	As Recommended By Mfg.
April 1 - Sept. 1 Only	
Broadleaf Weed Control	As Recommended By Mfg.
Refertilizing	10 Lbs.
Soil Insect Control	As Recommended By Mfg.
Pests	As Recommended By Mfg.

I. Protection

1. Slopes: Area which will receive concentrated run off of water shall be protected with a covering of 5 ounce burlap jute netting or other methods approved by Engineer. Material shall be secured. Alternate methods approved by the Engineer may be used.
2. Berm slopes or General Mulching: Earth berms with a 3 to 1 slope or greater, as indicated on the drawings, shall receive heavy mulch. Straw or hay (weed free and in unrotted condition) to be applied in ample amounts to avoid erosion. Securing of mulch shall be by use of tobacco netting laid over hay/straw mulch and staked down on 6' grid pattern.
3. Reseeding: Reseeding shall begin in any areas that do not show a satisfactory stand of grass after the 15 days. Reseeding may be done after provisional acceptance or at the proper time of the year.

3.6 MULCH AND BARK

A. Place all mulch on an underlayment of weed block (mulching) fabric. Plastic is not to be used as an underlayment. Weed fabric shall be held in place by the use of steel wire garden staples at minimum 6’ o.c. at fabric edges or seams and at all corners. All mulch shall be placed a minimum of 4" thick typically, 6" thick at edges and curbs.

3.7 MAINTENANCE

A. The Contractor shall begin maintenance and mowing immediately after each plant or lawn area is planted and shall provide a minimum of three mowings under this contract. Plants shall be watered, remulched, weeded, pruned, sprayed, fertilized, cultivated and otherwise maintained and protected until acceptance by the Owner. No lawn or meadow grass/wildflower areas will be accepted in less than sixty (60) days.

B. The planting and lawns shall be watered in a satisfactory manner during and immediately after planting. All lawns and plants shall be thoroughly watered once a week. During the hot summer months this schedule shall be increased to twice per week or more depending on the severity of the weather.

C. Weed Killer: One application of Broadleaf weed killer shall be applied at the proper time if deemed necessary by the Engineer. Selective Broadleaf weed killer shall be applied as per manufacturer's recommendations. Application shall be approved method. Extreme care shall be taken so that work is done on a windless day, so that no injury occurs to surrounding plant materials from drift.

D. Mowing: Mowers shall be set 2" to 2-1/2" in height. In the event grass becomes too long and excessive grass clippings are present so as to cause damage to the lawn area, it shall be the Landscape Contractor's responsibility to remove all clippings. No Mow grass

can be mowed at least once a year after spring seed set and wetland areas will not be mowed but cut once a year leaving vegetation at 6” after fall dormancy.

E. Lawn Maintenance: The Contractor's responsibility for maintenance is to be continuous to the time of final acceptance of the work by the Engineer. It is to include, but not be limited to reseeding, remulching, watering, mowing and working, as follows:

1. Reseeding and remulching of any bare areas.
2. Removal of excess straw or hydro mulching.
3. Proper and adequate watering.
4. Refilling of rain-washed gullies and rutted areas.
5. Reworking, reseeding and remulching of any areas which fail to show a uniform stand of grass.
   a. To be done at the Contractor's expense with the same seed mixture applied at the rate, and with the mulch originally used, and repeated until all areas are covered with a satisfactory strand of grass.

6. Contractor's Responsibility: In the event Contractor does not establish a dense lawn during first germination period, he shall return to project after ensuing season to re-fertilize and reseed the areas requested to establish a dense lawn.

3.8 GUARANTEES

The Contractor shall guarantee all plant materials supplied and installed under this Section for a period of one year from date of planting acceptance. This guarantee shall also pertain to any plant material replaced under this guarantee, unless it can be demonstrated that the failure of the replaced material was due to poor conditions which were outside of the Contractor's control. If planting occurs after dormancy (November 1), the guarantee on the deciduous plants will extend beyond November 1 of the next year to June 1 of the following year.

END OF SECTION 329218

DIVISION 33

SECTION 33 31 11 - SITE SANITARY SEWERAGE UTILITIES

PART 1 - GENERAL

1.1 RELATED DOCUMENTS

A. Drawings and general provisions of the Contract, including General and Supplementary Conditions and Division 01 Specification Sections, apply to this Section.

B. Section 312100 Earthwork.

1.2 REFERENCES

A. Rhode Island Department of Transportation Standard Specifications for Roads and Bridge Construction amended to February 2024

1.3 SUMMARY

A. The specifications herein are minimum requirements and shall apply to all work under this Contract. If the specifications conflict with any Federal, Local and/or State Codes, Regulations and/or Ordinances, the more stringent shall apply and be adhered to.

B. The work under this Section includes all labor, supervision, materials and equipment necessary for the completion of all work including, but not be limited to:

1. Construction and modification of sanitary sewerage utilities as shown on the Contract Drawings and specified herein.

C. Coordinate with any City of Pawtucket Department of Public Works Water Division rules, regulations and requirements and obtain permits and pay any permit fees, connection, inspection, testing, meter or other fees imposed by the utility.

1.4 SUBMITTALS

A. The Contractor shall submit the following samples, certifications or test results prior to use on the project.

1. Product data for piping and appurtenances.
2. Record Drawings of installed Sanitary Sewage piping and products per division 1 requirements.
3. Maintenance Data: Submit maintenance data and parts lists for sanitary sewage system materials and products. Include this data, product data, shop drawings, and record drawings in maintenance manual in accordance with requirements of Division 1.

PART 2 - MATERIALS

2.1 SANITARY PIPING, STRUCTURES AND APPURTENANCES

A. Provide pipes of one of the following materials, indicated on Contract Drawings of weight/class indicated. Provide pipe fittings and accessories of same material and weight/class as pipes, with joining method as indicated.

B. Polyvinyl Chloride (PVC) Sewer Pipe from building to waste interceptor shall be PVC Schedule 40 or 80 and conform to ASTM D1785 or ASTM D2665 with solvent weld couplings/fittings using proper two-step PVC solvent solution.

C. Polyvinyl Chloride (PVC) Sewer Pipe shall be SDR 35 and conform to ASTM D 3034 where indicated on Contract Drawings. Hydrostatic design stress rating of 730 psi based on 1460 psi material, ASTM D2837. PVC pipe lengths shall generally be as long as possible but shall have a bell-and-spigot or shall have furnished with it a separate jointing sleeve or coupling with rubber rings compressed into place to make a watertight closure. Joints shall be sealed with a rubber ring gasket and shall be of a composition and texture which will endure permanently under the conditions likely to be imposed by this use, and shall conform to ASTM Specifications C-361 amended to date.

D. For Schedule 40 PVC, fittings shall be PVC and conform to ASTM D1785 or D2665 with solvent-cement joints using solvent cement complying with ASTM D 2564.

E. For SDR35 ASTM D3034 PVC Pipe, fittings shall be elastomeric joints complying with ASTM D3212 using elastomeric seals complying with ASTM F4787.

2.2 SANITARY LATERALS

A. Provide sanitary cleanouts per details and City of Pawtucket Department of Public Works standards.

B. Provide SDR35 ASTM D3034 PVC pipe where indicated on Contract Drawings.

2.3 SANITARY SEWER MANHOLE CONNECTION

A. Cast-in-Place concrete for bases, poured inverts, and encasement shall be minimum 3000 psi compressive strength at 28 days and conform to the requirements of the City of Pawtucket Department of Public works.

B. Sewer and manhole brick for benches and inverts shall conform to the provisions of ASTM C32-73 Grade MA.

C. Precast concrete grade rings for setting of manhole frames shall conform to the provisions of ASTM C478.

D. Frames and covers shall be as indicated on the Contract Drawings. Metal for manhole frames and covers shall be cast iron. The lower surface of the cover and the corresponding upper surface of the frame shall be machine finished to provide a smooth support without tendency for the cover to rock or rattle. Cast iron shall conform to the requirements of AASHTO M105, Class 25. Unless otherwise specified, all frames and covers shall be painted with a field coat of RC-2 asphalt or SS-1 emulsion immediately before installation.

E. Flexible manhole connections for pipe 15" diameter or less shall be in conformance with ASTM C 923 and be as manufactured by NPC, Inc., “KOR N SEAL”® I or equal with stainless steel pipe clamp, or as required by the City of Pawtucket Department of Public Works.

F. Pipe Connectors: Resilient, neoprene by Fernco, Inc. or approved equal complying with ASTM C923.

G. Non-Shrink Grout: Conforming to ASTM C827 allowing 3 percent expansion, compressive Strength of 4500 psi.

H. Check valve: Swing check backwater valve, rotating, self cleaning normally closed coated cast iron with bronze check assembly and access box or as required by City of Pawtucket Department of Public Works..

2.4 CLEANOUTS

A. General: Polyvinyl chloride pipe ASTM D3034. Provide if indicated on Contract Drawings, pipe extension to grade with ferrule and countersunk cleanout plug. Provide round cast-iron access frame over cleanout, with heavy-duty secured scoraited cover with lifting device as approved by the Engineer.

2.5 IDENTIFICATION SANITARY SEWER

A. Underground-Type Plastic Line Markers: Manufacturer's standard permanent, bright-colored, continuous-printed plastic tape, intended for direct-burial service; not less than 6" wide x 4 mils thick. Provide green tape with black printing reading "CAUTION SEWER LINE BURIED BELOW" by ProLine Inc., Harris Industries or approved equal.

PART 3 - EXECUTION

3.1 SPECIAL REQUIREMENTS

A. Before beginning work, the Contractor shall check, in the field, existing grades and layout as shown on the drawings and report any discrepancies which will affect the work of this contract to the Engineer. Commencement of work will be implied to mean acceptance. No adjustment will be made for discrepancies discovered after work has begun.

3.2 INSTALLATION IDENTIFICATION

A. During back--filling/top-soiling of sanitary sewage systems, install continuous underground-type plastic line marker, located directly over buried line at 6" to 8" below finished grade.

3.3 PREPARATION

A. Remove large stones or other hard matter that could damage sanitary sewerage pipe or impede consistent backfilling or compaction.

3.4 INSTALLATION

A. In general, piping shall be installed per City of Pawtucket Department of Public Works standards, manufacturer’s recommendations, and in accordance with ASTM D2321.

B. All structures and pipes shall be constructed and installed in accordance with the drawings and according to City of Pawtucket Department of Public Works standards.

C. Piping:

1. Construct lines, grades and dimensions shown on the drawings.
2. Pipes shall have a firm bearing throughout each length.
3. Joints for PVC shall be made as per manufacturer’s recommendations.
4. Install piping beginning at low point of system, true to grades and alignment indicated, with unbroken continuity of invert. Maintain offsets required by code from

water lines (18 inches vertically and/or 10 feet horizontally minimum) and other utilities as required.

5. Place bell ends or groove ends of piping facing upstream.
6. Install gaskets in accordance with manufacturer's recommendations for use of lubricants, cements, and other special installation requirements.
7. Clean pipe and clear interior of piping of dirt and other superfluous material as work progresses. Maintain swab or drag in line and pull past each joint as it is completed. In large, accessible piping, brushes and brooms may be used for cleaning. Place plugs in ends of uncompleted conduit at end of day or whenever work stops. Flush lines between manholes if required to remove collected debris.
8. Secure joints between different types of pipe with standard manufactured adapters and fittings intended for such purpose.
9. Close open ends of abandoned underground utilities that are indicated to remain in place. Provide sufficiently strong closures to withstand hydrostatic or earth pressure that may result after ends of abandoned utilities have been closed. Close open ends of piping with threaded metal caps, plastic plugs, or other acceptable methods for size and type material being closed. Wood plugs are not acceptable.
10. Close open ends of concrete or masonry utilities with not less than 8" thick brick masonry bulkheads.
11. Maintain flows from existing buildings during construction. Do not allow dirt and other foreign material to enter active piping. Do not allow discharge of sanitary wastes to ground or in trenches from active sanitary lines. Coordinate work to prevent disruption of sanitary sewer service to buildings.
12. Contractor shall continuously inspect piping to ensure line displacement or damage has not occurred. Contractor shall perform inspections after lines between manholes, or cleanouts have been installed and approximately 2-ft of backfill is in place, and again at completion of project. If inspection indicates poor alignment, debris, displaced pipe, infiltration or other defects, the Contractor shall correct such defects and reinspect.
13. Approved joint materials shall be handled and installed in accordance with the recommendation of the manufacturer. All joints shall be wiped smooth inside the pipe.
14. The Contractor shall provide all necessary pumps, dams, drains, ditches, flumes, well points and other means for excluding and removing water from trenches and other parts of the work. Water shall not be allowed to rise around the joint until it has set.
15. Pipe Bedding shall conform to the Contract Drawings, these specifications and City of Pawtucket Department of Public Works standards.
16. Refer to Section 312100.3.07-Trenching for excavation for utility trenches.
17. All pipes installed under paved areas shall be bedded in firmly compacted bedding material from the bottom of the trench to the pipe centerline, unless otherwise shown on details.
18. Any unsuitable material that has been removed as specified under trench excavation shall be replaced with material as specified herein.
19. Trenches shall be backfilled only after pipe has been inspected and approved and locations of pipes and appurtenances have been recorded on the ‘As Built’ drawings.
20. Backfill for trenches located in paved areas shall be ¾” crushed stone bedding and pipe envelope. Backfill from 6” above pipe to pavement subbase shall be Unified Soil Classification Type GW, GP, SW or SP. This backfill shall be deposited and spread in uniform, parallel layers not exceeding eight inches in thickness before compaction. Each layer shall be compacted before the next layer is placed. Compaction shall conform to ASTM D1557 and compacted to 95% maximum dry density.
21. Backfill for trenches located in unimproved areas, including areas such as play fields or easily repaired lawns, may be backfilled and compacted with existing material, if approved by the Engineer.
22. After inspection of the pipe, backfill from the pipe centerline to 6 inches above the pipe shall be placed by hand and firmly compacted.
23. Backfill material shall be free from frozen lumps, wood, or other extraneous material.

24. For additional information on backfill material refer to Section 312100 Earthwork.
25. Provide and install lateral check valve and traffic rated access valve box upstream of connection to main in accordance with City of Pawtucket Department of Public Works standards.

3.5 SANITARY MANHOLE CONNECTION

A. Excavation, supports and backfilling for installation of manholes shall conform to the requirements of Division 2.

Openings shall be provided in the precast reinforced concrete pipe sections to receive entering and existing pipes, and these openings may be made at the place of manufacture or they shall be cut in the field.

The pipe to manhole connections for pipe 15" in diameter and less shall be made by core drilling and using a flexible neoprene pipe to manhole connection and installed according to the manufactures recommendations, or in accordance with City of Pawtucket Department of Public Works standards.

B. Manhole inverts shall be constructed of brick and/or poured in place concrete as ordered by the Engineer. Inverts shall have the exact shape of the sewers which are connected, and any change in elevation, size or direction shall be gradual and even. Benches shall slope consistently down to the top of the invert trough.

C. All plugs in manholes shall be sealed with brick and non-shrink mortar.

Adequate precautions shall be taken during freezing weather to protect the masonry from damage by frost. No water shall be allowed to rise in excavations for manholes until all mortar has set sufficiently. Upon completion, all debris shall be removed from each manhole.

The entire work of constructing connections to manholes must be carried on in a manner to insure watertight work. Any leak in manholes shall be caulked and completely repaired, or the entire work shall be removed and rebuilt.

3.5 CLEAN-UP

A. Keep sanitary sewerage piping and appurtenances free of sand, silt, trash or other materials at all times.

3.6 INSPECTION AND TESTING

A. Inspection and Testing - Upon completion of the installation and backfilling portions of the sanitary sewer, the pipe shall be inspected by the visual and, if required by City of Pawtucket Department of Public Works standards, by air test methods. This inspection and testing shall be undertaken as the work progresses. The Engineer shall be notified in advance of such inspection and testing and the Contractor shall provide all facilities, materials, equipment and labor required for such testing. Such inspection and testing shall be a prerequisite for acceptance of all work.

1. Visual Inspection: - An inspection of the interior of the completed Sanitary Sewer Pipe by direct visual inspection shall be made for all pipe installed from sanitary sewer structure or manhole to manhole. Any lights, equipment or labor necessary for such inspection shall be provided by the Contractor.

Any foreign material found in the interior of the sewer, any dirt, debris or other objects shall be removed by the Contractor. Visible defects such as broken pipe sections, improperly installed gaskets, projecting connections, cracks, visible leaks or other defects shall be noted, corrected and the pipe reinspected.

3.7 AS-BUILT DRAWINGS

A. As work progresses, record on one set of drawings all changes and deviations from contract drawings in size, line and grade. Make sufficient measurements to locate the work completed. Record on the drawings, any uncharted locations of utilities encountered during installation of the sanitary sewerage system (denote utility type, size, material, etc.). Deliver the drawings to the Engineer no less than 60 days after the project has reached substantial completion.

END OF SECTION 333111

SECTION 33 41 13 - SITE STORMWATER UTILITIES

PART 1- GENERAL

1.1 RELATED DOCUMENTS

A. Drawings and general provisions of the Contract, including General and Supplementary Conditions and Division 01 Specification Sections, apply to this Section.

B. Section 312100 Earthwork

1.2 REFERENCES

A. Rhode Island Department of Transportation Standard Specifications for Roads and Bridge Construction amended to February 2024.

1.3 SUMMARY

A. The specifications herein are minimum requirements and shall apply to all work under this Contract. If the specifications conflict with any Federal, Local and/or State Codes, Regulations and/or Ordinances, the more stringent shall apply and be adhered to.

B. The work under this Section includes all labor, supervision, materials and equipment necessary for the completion of all work including, but not be limited to:

1. Construction and modification of stormwater utilities as shown on the Contract Drawings and as specified herein.

1.4 SUBMITTALS

A. The Contractor shall submit the following samples, certifications or test results prior to use on the project.

1. Product data for piping and appurtenances.
2. Product data for manholes, catch basins, frames and grates. Include plans, elevations, sections, details, frames, covers, and grates.
3. Product data for pipe connectors and catch basin hoods.

1.5 DELIVERY, STORAGE, AND HANDLING

A. Do not store plastic manholes, pipe, and fittings in direct sunlight.

B. Protect pipe, pipe fittings, and seals from dirt and damage.

C. Handle manholes according to manufacturer's written rigging instructions.

D. Handle catch basins and stormwater inlets according to manufacturer's written rigging instructions.

PART 2 - MATERIALS

2.1 STORMWATER PIPING, STRUCTURES AND APPURTENANCES

A. Reinforced Concrete Pipe (RCP) and fittings shall conform to the requirements of ASTM C-76, shall be Class IV or of the class and wall indicated on the drawings and installed with O-ring gaskets at the joints. Gaskets shall comply with ASTM C443, C361 and shall be installed in strict accordance with pipe manufacturer's recommendations.

Each length of pipe shall be provided with bell-and-spigot or tongue-and-groove ends formed in the concrete wall which shall enclose the gasket on all surfaces when the joint is in final position. Tongue or spigot ends of pipe shall be a grooved type to hold O-ring compression gasket in place.

RCP elbows, tees, wyes, and/or increasers/reducers shall be plant manufactured units conforming to all the requirements for RCP. Joints shall be as on the main stormwater pipe.

B. High Density Polyethylene (HDPE) pipe and fittings (solid or perforated) shall have a smooth interior and shall conform to AASHTO Designation M 294 Type S. The pipe shall be HS-25 rated. The pipe shall have annular corrugations. The self-locking integral bell portion shall be permanently affixed to the pipe and shall be polyethylene. The locking mechanism shall engage at 4 equally spaced locations around the pipe circumference. It shall be manufactured from high density polyethylene (HDPE) meeting the requirements of ASTM D3350 cell class 324420C; or the requirements of ASTM D1248: Type III, Category 4 Grade P33, Class C. Acceptable manufacturers: Advanced Drainage Systems, Inc. "ADS N-12", HANCOR, INC. "Hi-Q", or approved equal.

C. Mortar for masonry shall be 1:3 cement- sand mix with hydrated lime. Hydrated lime not exceeding 10% by weight of cement.

D. Catch Basins and Manholes: Not Applicable.

E. Filter Fabric shall be Mirafi 140N or approved equal.

F. Structural Steel and Cast iron frame and grates shall conform to M02 and M04.03.6 of the Standard Specifications. Structural steel frames and grates shall be galvanized in accordance with ASTM A123.

G. Bedding material and backfill shall conform to Section 312100 and the Contract Drawings.

H. Reinforcing Steel: See Section M02 and M05 of the Standard Specifications.

I. Concrete building brick shall conform to the requirements of ASTM C55.

J. Precast units shall conform to M.04.03 of the Standard Specifications.

K. Flexible services tees and flexible watertight connections shall consist of neoprene rubber by Fernco or approved equal.

L. HDPE to RCP pipe connectors shall be Kor-N-Tee by Trelleborg, or approved equal.

M. Catch basins hoods shall be cast iron by Neenah Foundry, or approved equal.

N. Underground-Type Plastic Line Markers: Manufacturer's standard permanent, bright-colored, continuous-printed plastic tape intended for direct burial service; not less than 6" wide x 4 mils thick. Provide green tape with black printing reading "CAUTION BURIED STORM DRAIN LINE BELOW" by ProLine, Inc., Harris Industries, or approved equal.

PART 3 - EXECUTION

3.1 SPECIAL REQUIREMENTS

A. Before beginning work, the Contractor shall check, in the field, existing grades and layout as shown on the drawings and report any discrepancies which will affect the work of this contract to the Engineer. Commencement of work will be implied to mean acceptance. No adjustment will be made for discrepancies discovered after work has begun.

3.2 ORDER OF CONSTRUCTION

A. To assure proper drainage during construction operations, upon award of contract and prior to commencing any earth moving operations, the Contractor shall submit to the Engineer for approval his schedule of operation and proposed working procedures to implement erosion and sediment control and to maintain drainage during construction.

3.3 INSTALLATION IDENTIFICATION

A. During back-filling/top-soiling of storm water systems, install continuous underground-type plastic line marker, located directly over buried line at 6" to 8" below finished grade.

3.4 PREPARATION

A. Remove large stones (6 inches in least dimension or larger) or other hard matter that could damage stormwater pipe or impede consistent backfilling or compaction.

B. Preparation shall conform to Sections 312100 Earthwork of these specifications and the Standard Specifications.

C. Latest Edition of the Rhode Island Department of Transportation Standard Specifications for Roads and Bridge Construction amended to February 2024 (Standard Specifications).

3.5 INSTALLATION

A. All structures and pipes shall be constructed and installed in accordance with details depicted on the Contract Drawings and according to the Standard Specifications.

B. Structures:

1. Construct in accordance with the Standard Specifications.
2. Set castings at temporary grades to provide drainage during construction and reset tops when final grading is being done.
3. Set tops in full mortar bed true to lines and grades necessary.
4 Every other vertical mortar joint in upper brick courses shall be without mortar to serve as a weep. Cover openings with geotextile fabric.
5. Pervious material shall be used for backfilling the upper portion of the excavation made for catch basins, yard drains and drop inlets down to the elevation of the invert of the outlet pipe but in no case to a depth greater than 3 feet below the top of the structure.
6. Frames and strainers or covers which are to be reset shall be removed from their present beds, the walls or sides shall be rebuilt to conform to the requirements of the

new construction and the frames and gratings or covers reset. If the frames, grating or covers are broken or so damaged as to be unfit for further use, they shall be replaced with new, sound material conforming to the above requirements for the material involved.

7. All manholes, catch basins, yard drains, etc., which are in excess of five feet in depth shall be constructed with standard aluminum steps, spaced at 12 inch centers. Steps shall be in accordance with Standard Specifications and the Contract Drawings.
8. Backfill material around manholes, catch basins and other structures shall be as per Section 312100 and the Standard Specifications, and shall be placed in layers of not more than six inches in depth and firmly compacted.

C. Piping:

1. Construct to lines, grades and dimensions shown on the Contract Drawings.
2. Pipes shall have a firm bearing throughout each length.
3. Joints for RCP shall be made as per manufacturer's recommendations.
4. Pipe Bedding shall conform to the Contract Drawings, these specifications and the Standard Specifications.
5. Refer to Section 312100 for utility trench excavation methods.
6. All pipes shall be bedded in firmly compacted bedding material from the bottom of the trench to the top of pipe, unless otherwise shown on details.
7. Any unsuitable material that has been removed as specified under trench excavation shall be replaced with material as specified herein and per Section 312100.
8. Trenches shall be backfilled only after pipe has been inspected and approved and locations of pipes and appurtenances have been recorded on the 'As Built' drawings.
9. Backfill for trenches shall utilize fill excavated from trench where if suitable per Section 312100 Earthwork. If unsuitable refer to Section 312100 Earthwork for Backfill requirements. This backfill shall be deposited and spread in uniform, parallel layers not exceeding eight inches in thickness before compaction. Each layer shall be compacted before the next layer is placed.
10. After inspection of the pipe, backfill from the top of pipe to 12 inches above the pipe shall be placed by hand and firmly compacted. The Engineer may allow machine placement of the first 12 inches above the pipe if it can be demonstrated that the pipe will not be damaged. The Contractor shall be responsible for any such damage to the pipe.
11. Backfill material shall be free from frozen lumps, wood, or other extraneous material.

D. Pipe connectors shall be installed in accordance with manufacturer's instructions.

D. Catch basin hoods shall be installed in accordance with manufacturer's instructions.

3.6 CLEAN-UP

A. Keep stormwater structures and piping free of sand, silt, trash, or other materials at all times. Clean system prior to completion of project of debris and sediment.

3.7 AS-BUILT DRAWINGS

A. As work progresses, record on one set of drawings all changes and deviations form contract drawings in size, line and grade. Make sufficient measurements to locate the work completed. Record on the drawings, any uncharted locations of utilities encountered during installation of the stormwater system (denote utility type, size, material, etc.). Deliver the drawings to the Engineer no less than 60 days after the project has reached substantial completion.

3.8 INSPECTION

A. Upon completion of installation and backfilling, all pipe, and structures shall be inspected by the Inspector and Engineer. This inspection shall be undertaken as the work progresses, and shall be a pre-requisite for acceptance of all work.

An inspection of the interior of the completed pipe by direct visual inspection shall be made by the Inspector for pipe installed. Any facilities, materials, lights, equipment or labor necessary for such inspection shall be provided by the Contractor.

Any foreign material found in the interior of the pipe, any dirt, debris or other objects shall be removed by the Contractor. Visible defects such as broken pipe sections, improperly installed gaskets, projecting connections, cracks, visible leaks, irregular inverts or other defects shall be noted, corrected and the pipe re-inspected.

END OF SECTION 334113

SECTION 33 51 11 - SITE NATURAL-GAS DISTRIBUTION

PART 1 - GENERAL

1.1 SECTION INCLUDES

A. Labor, tools, equipment, and services necessary for and incidental to provision of trenching and backfill for installation of natural gas distribution and service, including - but not limited to:

1. Trenching for installation of underground gas service line (including detectable underground marking tape) from the local natural gas company's main to meters located at the buildings.
2. Installation of detectable underground marking tape above new gas line.
3. Excavation and fill, testing, and incidentals necessary to complete the Work.
4. Coordination with the local gas company for providing and installing site natural gas distribution to the meter assembly.

1.2 RELATED REQUIREMENTS

A. Section 312100 Earthwork.

1.3 DEFINITIONS

A. The dimensionless designator NPS, (nominal pipe size) has been substituted in this Section for such traditional terms as nominal diameter, size, and nominal size.

B. The Drawings:

1. The Work shown on the Drawings is intended to be approximately to scale with the exception of details noted "No Scale" or "Not to Scale". Coordinate locations of proposed gas service with the local gas company.
2. The Drawings show runs of piping, but are not intended to show every pipe run, offset, fitting, and device, nor structural difficulty that might be encountered.
3. Provide trenching and backfilling necessary to make complete working systems ready for use as required to carry out the true intent and purpose of the Contract Drawings.

1.4 SUBMITTALS

A. Product Data and Shop Drawings: Provide data on:

1. Detectable warning tape

1.5 QUALITY ASSURANCE

A. Perform Work in accordance with the laws, ordinances, regulations, and codes of the project location, local gas company, and other local, state, or federal Authorities having Jurisdiction (AHJ).

C. Conform to NFPA 54.

D. Obtain and pay for all necessary inspection fees, certificates, and permits pertinent to the construction and installation of the gas service system.

E. Certifications:

1. Contractor performing trenching shall be certified to do so by local gas company.

1.6 DELIVERY, STORAGE, AND HANDLING

A. Coordinate the delivery and receipt of equipment and materials at the Site with local gas company so that installation is made in proper sequence and with a minimum loss of time.

1.7 SEQUENCING AND SCHEDULING

A. Coordination: Coordinate with the local gas company and arrange the work so that there will not be any delay in the proper installation and completion of any part or parts of the gas service system.

PART 2 - PRODUCTS

2.1 GAS SERVICE LINES

A. Gas service lines from the gas supply line to the gas meters shall be provided by the gas utility company.

2.2 DETECTABLE UNDERGROUND MARKING TAPE

A. Provide underground polyethylene gas service piping with a detectable underground marking tape buried approximately 6”-12” inches below finished grade in unpaved areas and 2” below pavement section in paved areas.

B. Tape shall be color coded for gas service with a coated imprinted message and reinforced protective plastic jacket bonded to a foil core (detectable). Tape shall be 9.1-mils thick with a tensile strength of 135 pounds for a 3-inch tape. Warning and identification shall be "Caution Buried Gas Line Below" or similar wording. Tape shall be Terra-Tape Sentry-Line, as manufactured by Reef Industries of Houston TX, or approved equal.

2.3 PIPE

A. Gas piping from the gas supply line to the gas meters shall be provided by the local gas company.

B. Gas pipe from the meter assembly to the building shall be provided and installed by the Building Contractor. It shall be approved by the local gas company.

2.4 GAS VALVES

A. Service line valves shall be provided by local gas company.

PART 3 - EXECUTION

3.1 EXAMINATION

A. The gas service lines will be installed by the gas utility company.

3.2 PREPARATION

A. Maintain Existing Utilities: Exercise utmost care to avoid damage to electric, telephone, sewer and water lines, roads, and all appurtenances thereto.

3.3 TRENCHING

A. See Section 312100 Earthwork for additional requirements.

B. Provide trenching and backfilling per the local gas company specifications.

C. The trench bottom shall be free of stumps, stones, boulders, rocks, frozen clods, and similar objects. Where a trench is made through rock, excavate to 8 inches below proposed grade and backfill to grade with compacted materials acceptable to the Architect/Engineer. Materials for backfill shall consist of sand bedding per the Contract Drawings and suitable soil material above the top of the sand backfill. Compact each lift to 95% Modified Proctor Density per ASTM D1557.

D. Keep pipe trenches free of water and as dry as possible during bedding, laying and jointing and for as long a period as required.

E. The local gas company will install the service pipe from the gas main to the meters within the trench provided by the Contractor. As soon as possible after a joint is made, place sufficient backfill material along the pipe to prevent pipe movement off line or grade.

F. Provide backfill and compaction in such a manner that the pipe is not damaged. Backfill around sides and to top of pipe with cover fill, tamp in place and compact, then complete backfilling.

3.4 INSTALLATION – GENERAL

A. General:

1. Furnish materials, perform excavation and fill, construct appurtenances, dispose of surplus excavation, and discard materials as necessary to complete the gas service system.
2. Install materials and equipment complete in a first class manner and in accordance with modern methods and practice.
   a. Installed material or equipment that does not present an orderly and reasonably neat or workmanlike appearance shall be removed and replaced when directed by the Owner. Such removal and replacement shall be done at the Contractor's expense.
3. Install equipment and piping in accordance with the manufacturer's recommendations and requirements of the local gas company.
   a. Positioning of equipment shall be performed in a manner to prevent marring, scratching, gouging, or any other damage or deformation to the equipment.
   b. Install and securely anchor equipment plumb, level, and true to line for proper operation.
4. Pile excavated material in a manner that will not endanger the Work and will not obstruct access to the Site.
5. Keep gutters and ditches clear at all times or make other satisfactory provisions. Do not obstruct drainage of natural watercourses.
6. The following items might cause a hazard or serve as an obstruction to either vehicular or pedestrian traffic. To protect persons from injury and to avoid property damage, enclose the following using fences or barricades and complement with adequate lighting:
   a. Trenches.
   b. Excavated pits
   c. Equipment.
   d. Pipe and other materials.
7. Temporarily support, adequately protect, and otherwise maintain underground utilities and surface structures, and other obstructions encountered in the progress of the

Work.

8. Removal of Water: At all times during construction, provide proper and satisfactory means and devices for the removal of water entering the excavated area. Remove such water as fast as it may collect to avoid interference with the prosecution of the Work (the proper placing of pipe, masonry or other materials).

3.5 FIELD QUALITY CONTROL

A. General:

1. Conduct testing in the presence of the Independent Testing Laboratory (ITL) and local inspectors having jurisdiction. Give sufficient advance notice of conducting such tests.
2. Furnish required labor, tools, materials, and equipment for such tests.

B. If tests indicate Work does not meet specified requirements, remove Work, replace and retest at no cost to Owner.

C. Trench excavation, trench backfill, and excavation below trench subgrade shall be as described in Section 312100 Earthwork Specification and as shown on the plan details.

END OF SECTION 335111

SECTION 00 41 00 - BID FORM

Pawtucket Passenger Facilities Building

300 Pine Street, Pawtucket, RI 02860

BIDDER INFORMATION

Contractors Name: _____

Street Address: _____

City, State, Zip: _____

Phone: _____

Contact Person: _____

Date Completed: _____

OFFER

A. Having examined the place of the Work and all matters referred to in the Contract Documents prepared by BL Companies (Owner's designee for the above-mentioned project) and Rhode Island Public Transit Authority (Owner), we, the undersigned, hereby offer to enter into a Contract to perform the Work, Pawtucket Passenger Facilities Building, for the amount indicated below, subject to the additions and deductions according to the terms of the Contract Documents and as stated below. The undersigned will provide all necessary and proper material, machinery, equipment, facilities, and means to complete the Work.

B. This bid includes Addenda numbered (to be filled in by Bidder, if addenda are issued):

   Addenda No. 1 Dated: _____

   Addenda No. 2 Dated: _____

C. The undersigned herby understands that the Owner has the right to reject any and all bids and to award the contract in the best interest of the Owner. The Owner reserves the right to award the entire project or delete portions of the work to funds available, whichever is in the best interest of the Owner.

D. The undersigned also understands that the contract must be carried out in strict accordance with the Contract Documents.

LUMP SUM BASE BID

Lump Sum Bid Price In Words	Lump Sum Bid – In Figures
_____	$_____

UNIT PRICE BASE BID ITEMS

Unit Bid Item No.	Item Description	Unit of Measure	Unit Price – Words and (Figures)	Quantity	Amount
1.	Load, Haul, and Dispose of contaminated soils per Soil Management Plan	Tons	_____ _____Dollars and _____Cents ($_____)	200	$_____

BASE BID ALLOWANCES

Allowance Item No.	Item Description	Unit of Measure	Unit Price – Words and (Figures)	Quantity	Amount
1.	Artwork Coordination	Lump sum	Ten Thousand Dollars and Zero Cents ($_____10,000_____)	1	$ 10,000

*Prior to invoicing for allowances, backup documentation must be submitted indicating actual cost of allowance item.

TOTAL BASE BID PRICE

FOR PURPOSES OF BID COMPARISON, TOTAL BASE BID PRICE INCLUDES: LUMP SUM BASE BID, UNIT PRICE BID ITEM 1, AND ALLOWANCE ITEM 1.

$ _____ (Amount in Figures)

$ _____ (Amount in Words)

ALTERNATE BID ITEMS

Alt. Bid Item No.	Item Description	Unit of Measure	Unit Price – Words and (Figures)
1.	**Credit** for changing floor color PC-2 to PC-1 and elimination of embedded metal bar (for separating colors).	Lump Sum	_____ Dollars and _____Cents ($_____)

Alt. Bid Item No.	Item Description	Unit of Measure	Unit Price – Words and (Figures)
2.	Cost to change first 3 courses of brick to precast to match sills and header.	Lump Sum	_____ Dollars and _____Cents ($_____)

Alt. Bid Item No.	Item Description	Unit of Measure	Unit Price – Words and (Figures)
3.	Cost for Furniture C-1, C-2, C-3, T-1, and T-2.	Lump Sum	_____ Dollars and _____Cents ($_____)

BID FORM SIGNATURE(S)

The Corporate Seal of

_____
(Bidder – Please print the full name of your Proprietorship, Partnership, or Corporation)

Was hereunto affixed in the presence of:

_____
(Authorized Signee) (Title) (Date)

(Seal)

_____
(Notary Public Signature and Seal) (Date)

If the Bid is a joint venture of partnership, add additional forms of execution for each member of the joint venture in the appropriate form of forms as above.

*****END OF SECTION*****